Register 8 Bits (RIGHT) Rev: 7
Data BUS
IC1
74LS245
UN RS CK GND
C5
C4
IC2
74LS173
RN1
IC3
74LS173
C3
OUT
OUT
OUT
OUT
SETUP
OUT
LOAD
IO CO BO AO II CI BI AI
HLT EO AO BO CO IO /RS PO UN RO SO PI FC FV CK +5v
RS SU AI BI CI II FI PE OI RI SI MI FN FZ /CK GND
C1
my LAB PCB

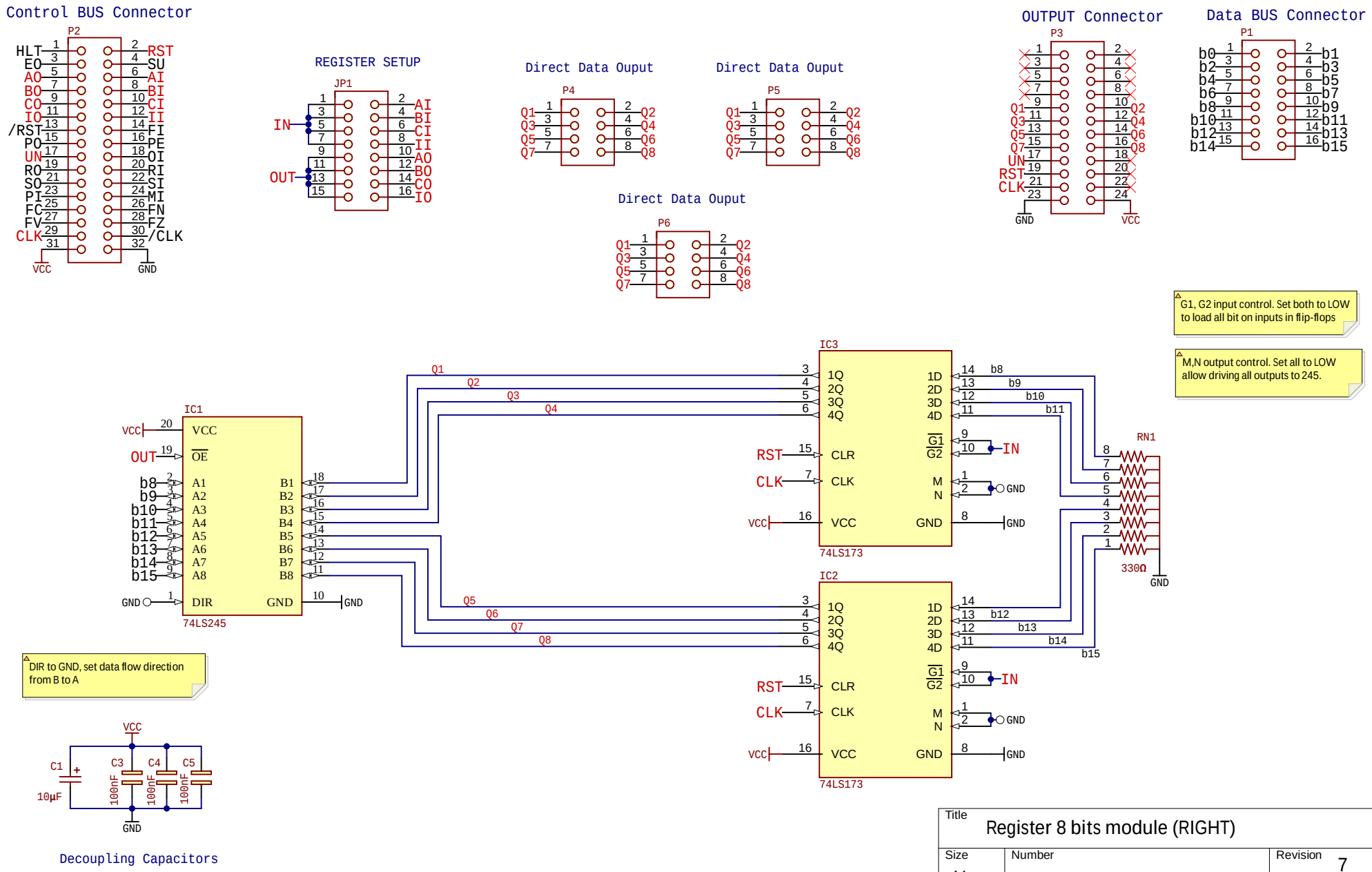

Title	Register 8 bits module (RIGHT)	
Size A4	Number	Revision 7
Date: 12/21/2021		Sheet of
File: E:\OneDrive - UNED\..\Register_8b_Right.SchDoc		Drawn By:

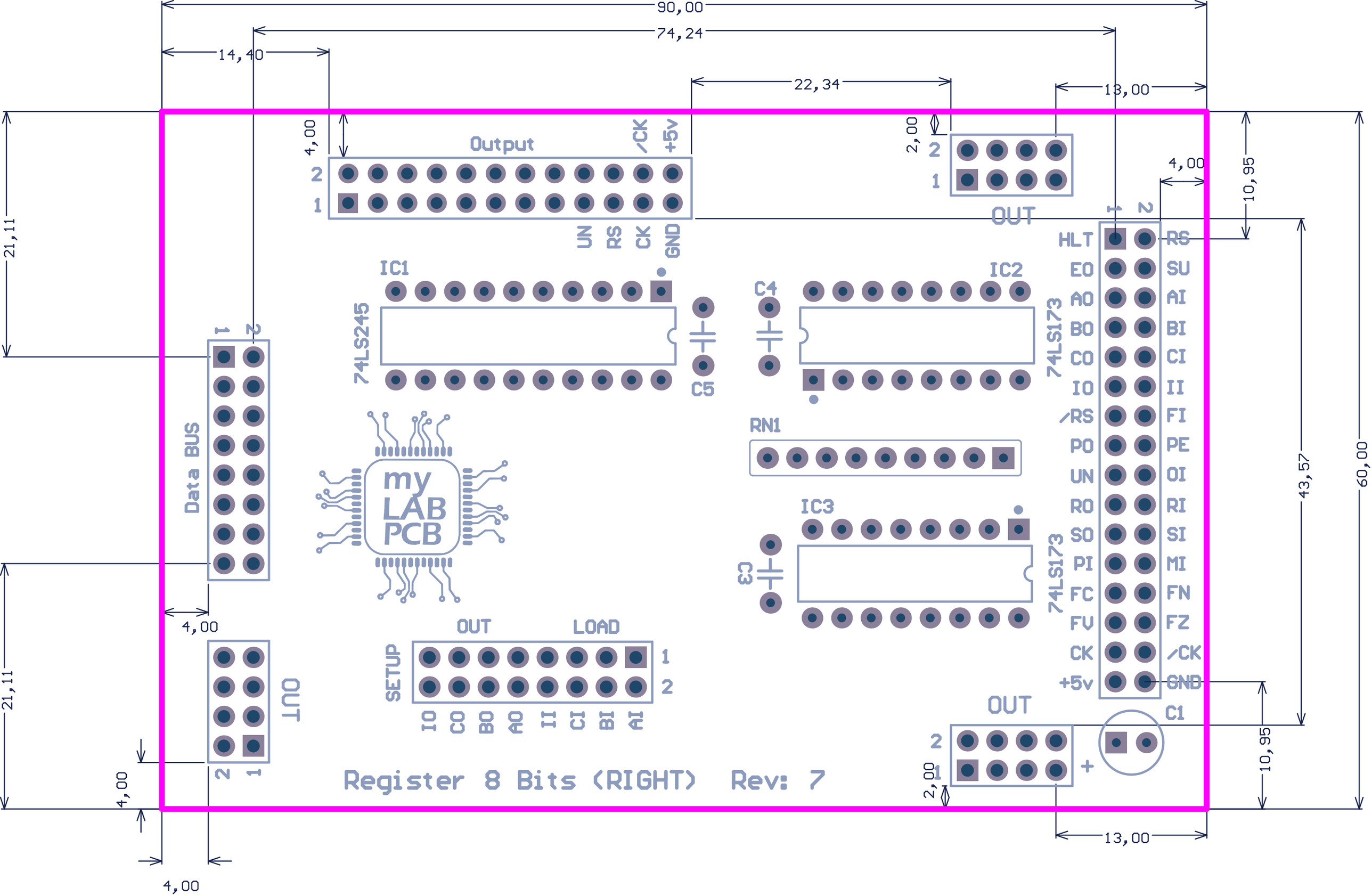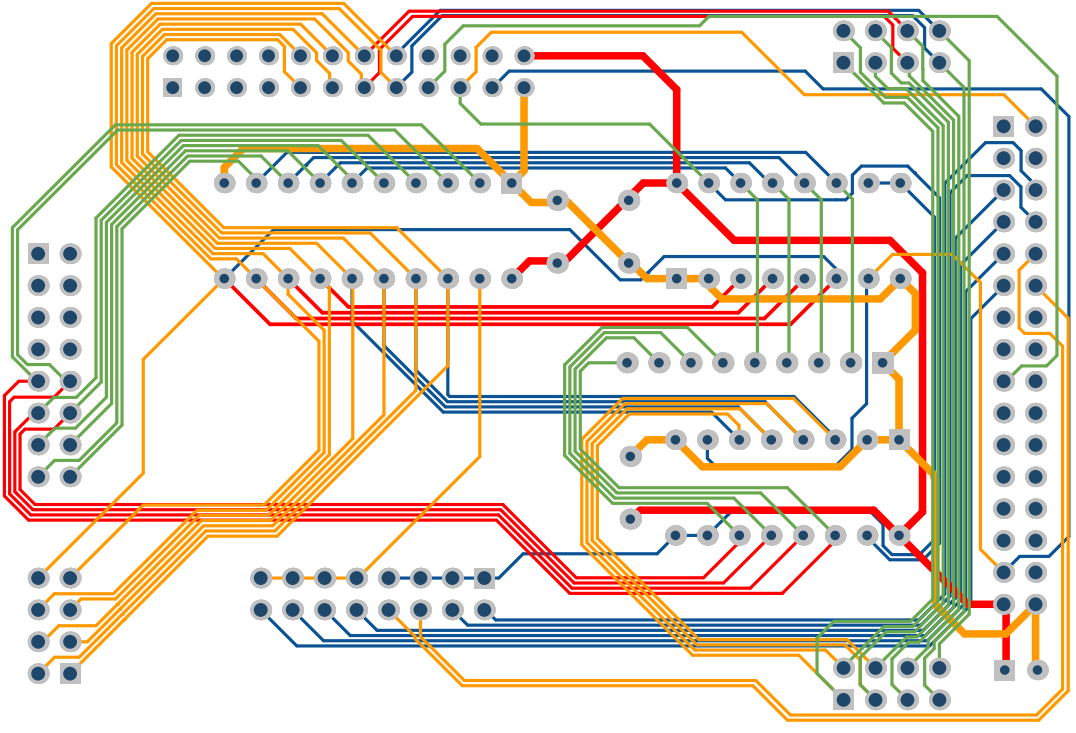
90,00
74,24
14,40
22,34
13,00
4,00
2,00
10,95
21,11
43,57
60,00
Output
/CK
+5v
UN
RS
CK
GND
OUT
IC1
74LS245
C4
C5
IC2
74LS173
HLT
EO
AO
BO
CO
IO
/RS
PO
UN
RO
SO
PI
FC
FV
CK
+5v
RS
SU
AI
BI
CI
II
FI
PE
OI
RI
SI
MI
FN
FZ
/CK
GND
Data BUS
RN1
IC3
C3
my LAB PCB
SETUP
OUT
LOAD
IO
CO
BO
AO
II
CI
BI
AI
C1
+
Register 8 Bits (RIGHT) Rev: 7