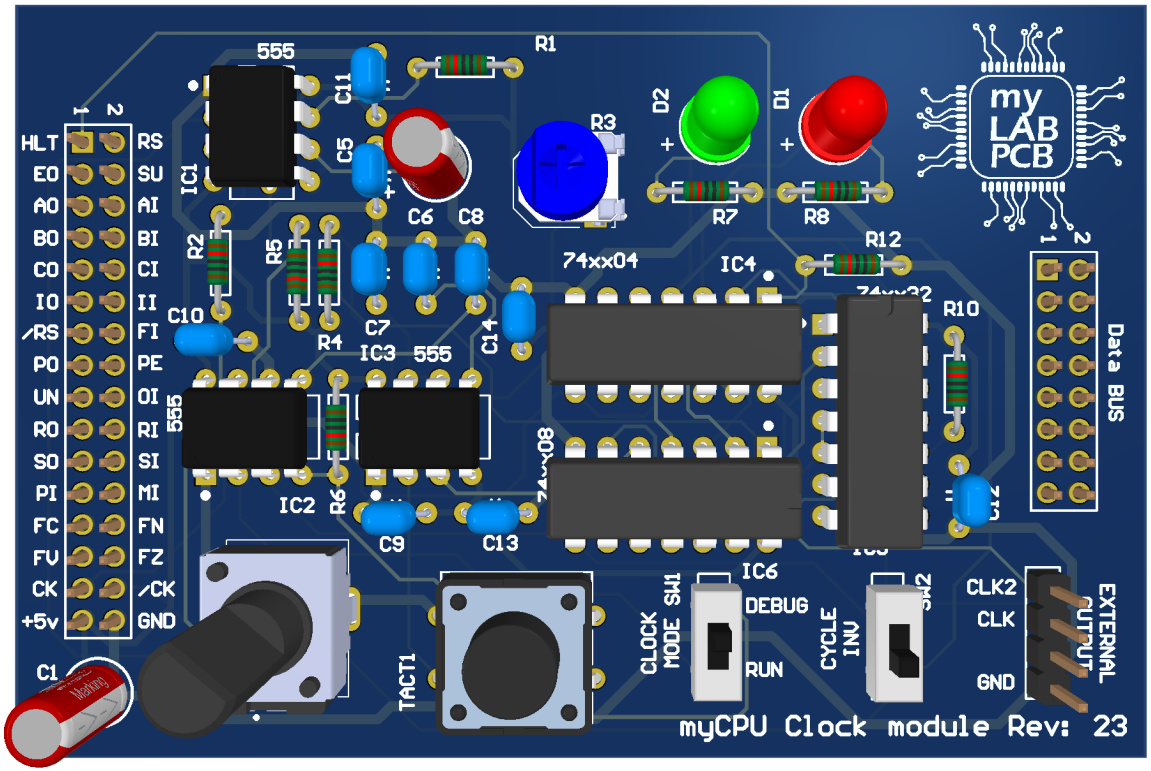

HLT
EO
AO
BO
CO
IO
/RS
PO
UN
RO
SO
PI
FC
FV
CK
+5v
RS
SU
AI
BI
CI
II
FI
PE
OI
RI
SI
MI
FN
FZ
/CK
GND
555
IC1
C11
C5
R1
R3
D2
D1
R7
R8
C6
C8
R2
R5
R4
C7
C10
IC3
555
C14
74xx04
IC4
R12
R10
Data BUS
IC2
R6
C9
C13
IC6
DEBUG
RUN
CLOCK MODE
SW1
CYCLE INV
CLK2
CLK
GND
EXTERNAL OUTPUT
TACT1
C1
myCPU Clock module Rev: 23

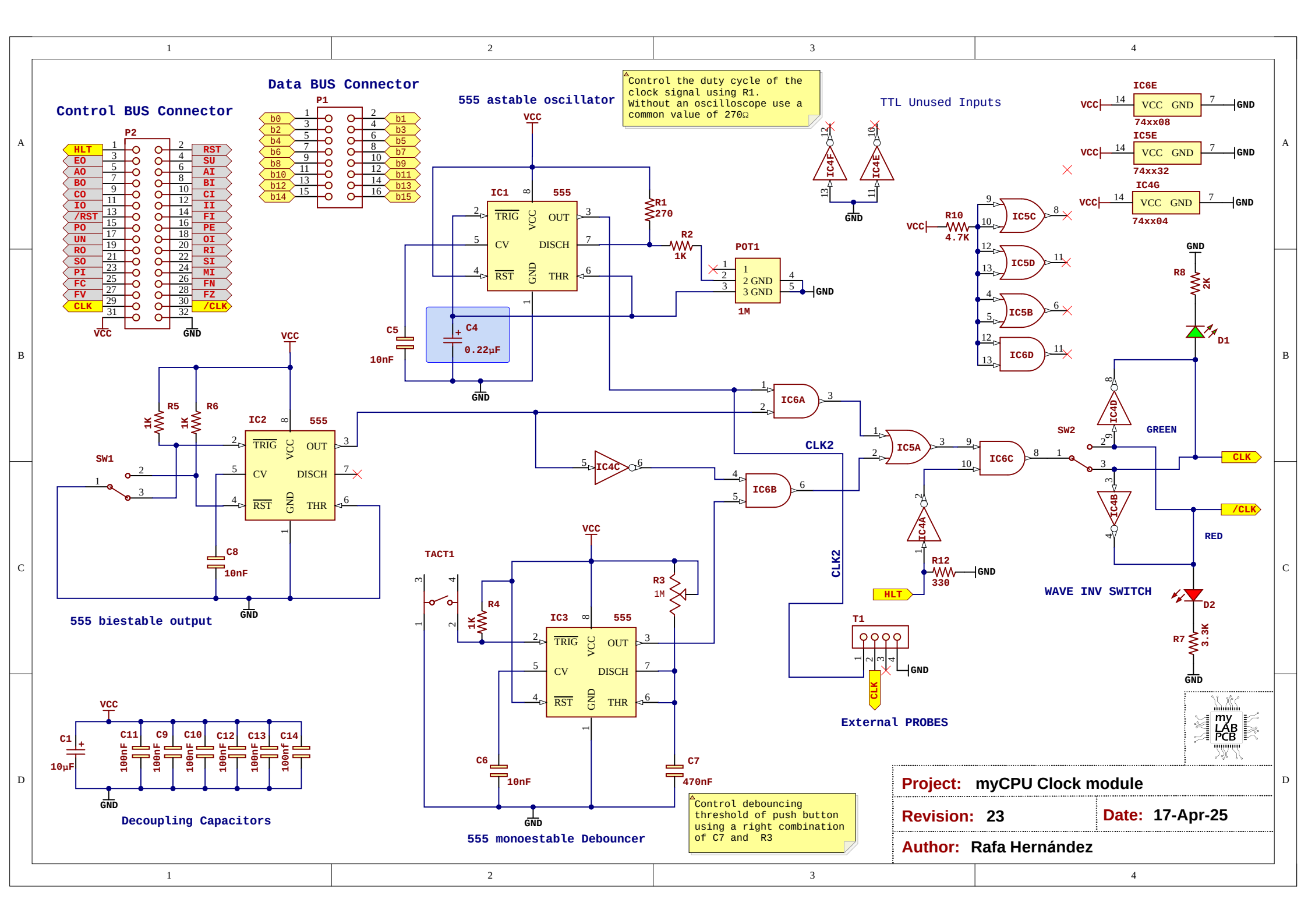
Control BUS Connector
P2
HLT
EO
AO
BO
CO
IO
/RST
PO
UN
RO
SO
PI
FC
FV
CLK
RST
SU
AI
BI
CI
II
FI
PE
OI
RI
SI
MI
FN
FZ
/CLK
VCC
GND
Data BUS Connector
P1
b0
b2
b4
b6
b8
b10
b12
b14
b1
b3
b5
b7
b9
b11
b13
b15
555 astable oscillator
Control the duty cycle of the clock signal using R1.
Without an oscilloscope use a common value of 270Ω
IC1
555
TRIG
CV
RST
VCC
GND
OUT
DISCH
THR
R1
270
R2
1K
POT1
1
2 GND
3 GND
1M
C5
10nF
C4
0.22µF
TTL Unused Inputs
IC4F
IC4E
IC6E
74xx08
IC5E
74xx32
IC4G
74xx04
R10
4.7K
IC5C
IC5D
IC5B
IC6D
R8
2K
D1
GND
555 biestable output
R5
1K
R6
1K
IC2
SW1
C8
10nF
IC6A
IC4C
IC6B
CLK2
IC5A
IC6C
IC4D
SW2
GREEN
CLK
IC4B
/CLK
RED
IC4A
R12
330
HLT
WAVE INV SWITCH
D2
R7
3.3K
T1
CLK
External PROBES
TACT1
R4
1K
R3
1M
IC3
C6
10nF
C7
470nF
555 monoestable Debouncer
Control debouncing threshold of push button using a right combination of C7 and R3
Decoupling Capacitors
C1
10µF
C11
C9
C10
C12
C13
C14
100nF
my LAB PCB
Project: myCPU Clock module
Revision: 23
Date: 17-Apr-25
Author: Rafa Hernández

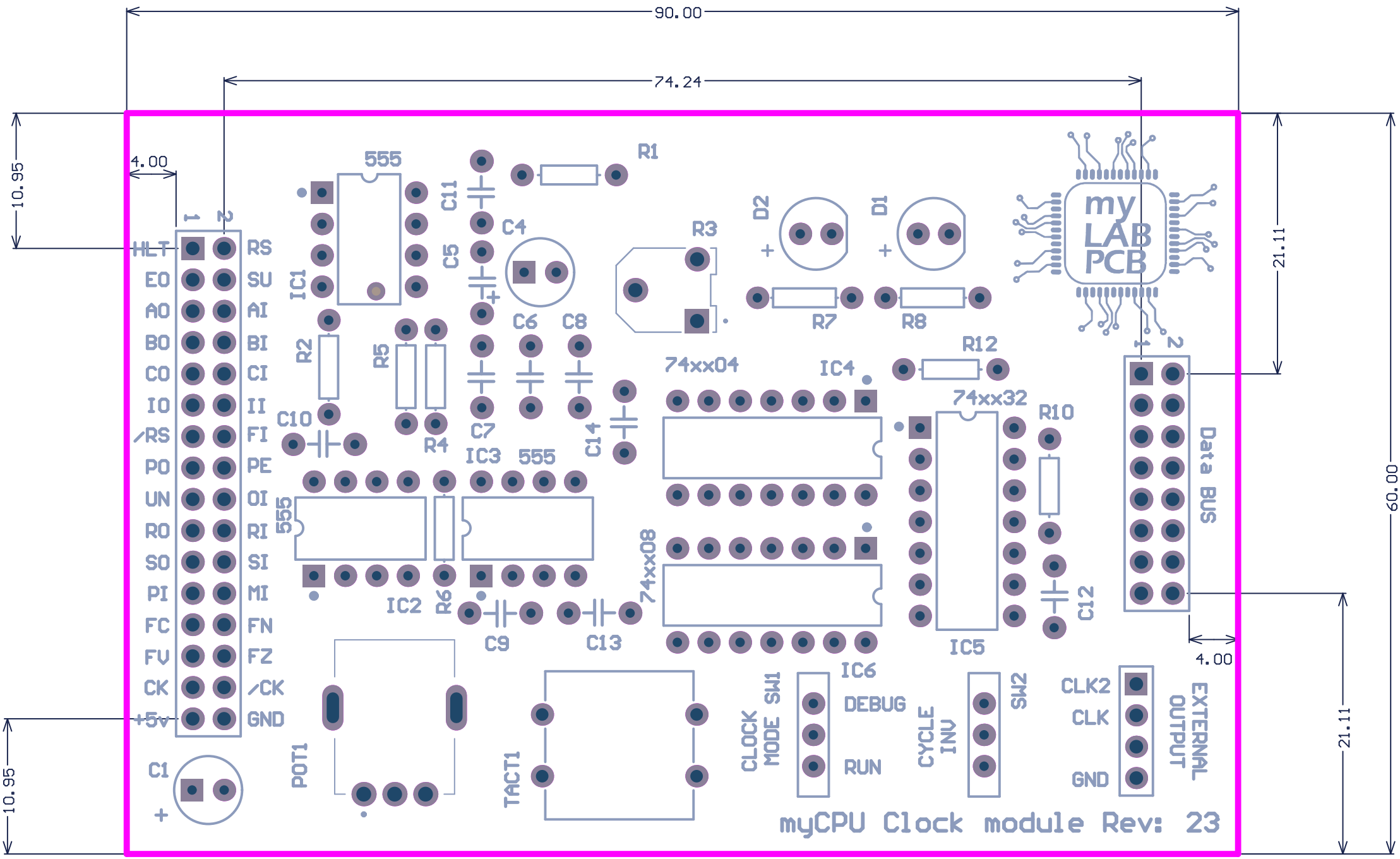
90.00
74.24
10.95
4.00
21.11
60.00
HLT
EO
AO
BO
CO
IO
/RS
PO
UN
RO
SO
PI
FC
FU
CK
+5v
RS
SU
AI
BI
CI
II
FI
PE
OI
RI
SI
MI
FN
FZ
/CK
GND
555
IC1
IC2
IC3
IC4
IC5
IC6
74xx04
74xx32
74xx08
R1
R2
R3
R4
R5
R6
R7
R8
R10
R12
C1
C4
C5
C6
C7
C8
C9
C10
C11
C12
C13
C14
D1
D2
POT1
TACT1
CLOCK MODE SW1
DEBUG
RUN
CYCLE INV
SW2
CLK2
CLK
GND
EXTERNAL OUTPUT
Data BUS
myCPU Clock module Rev: 23

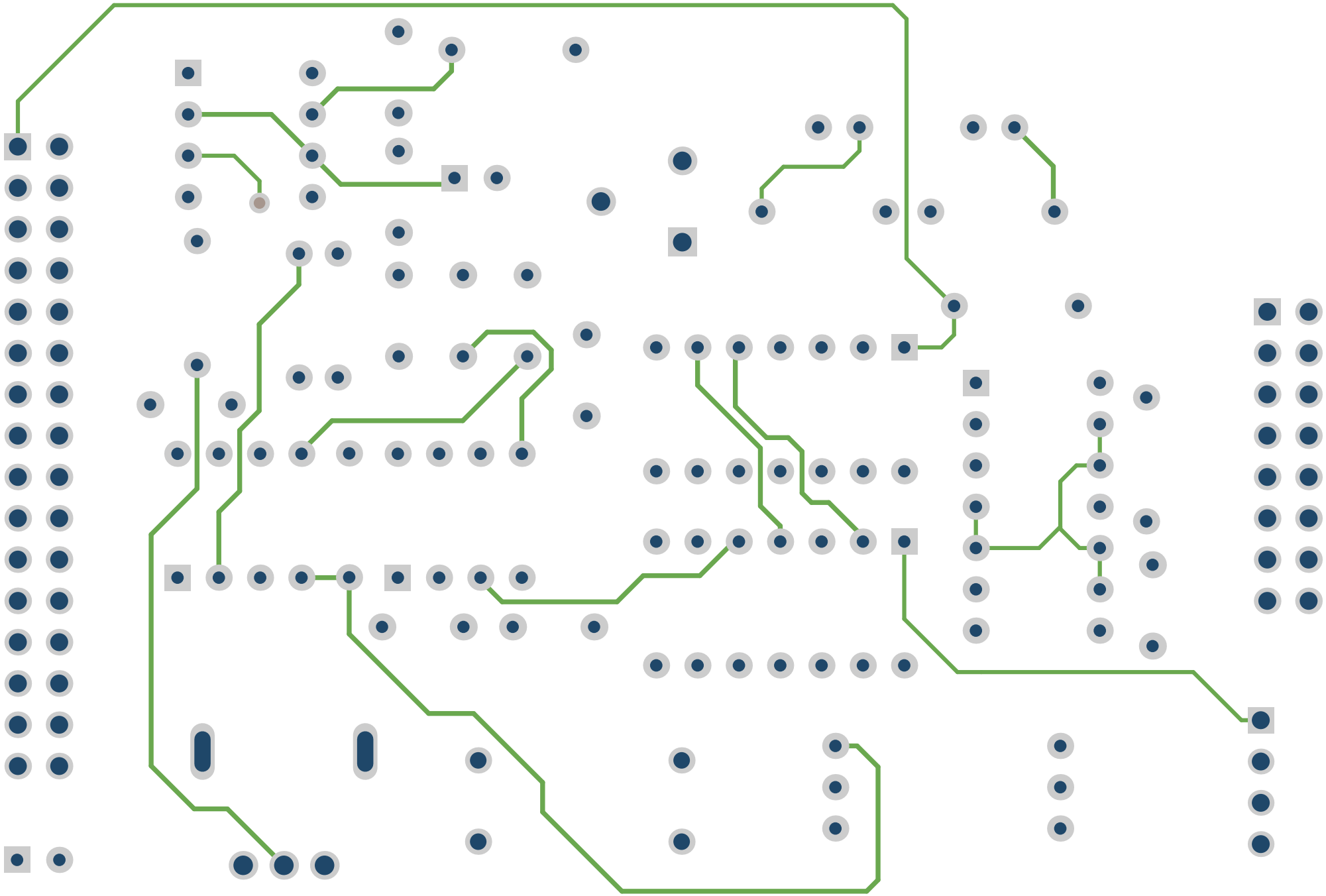

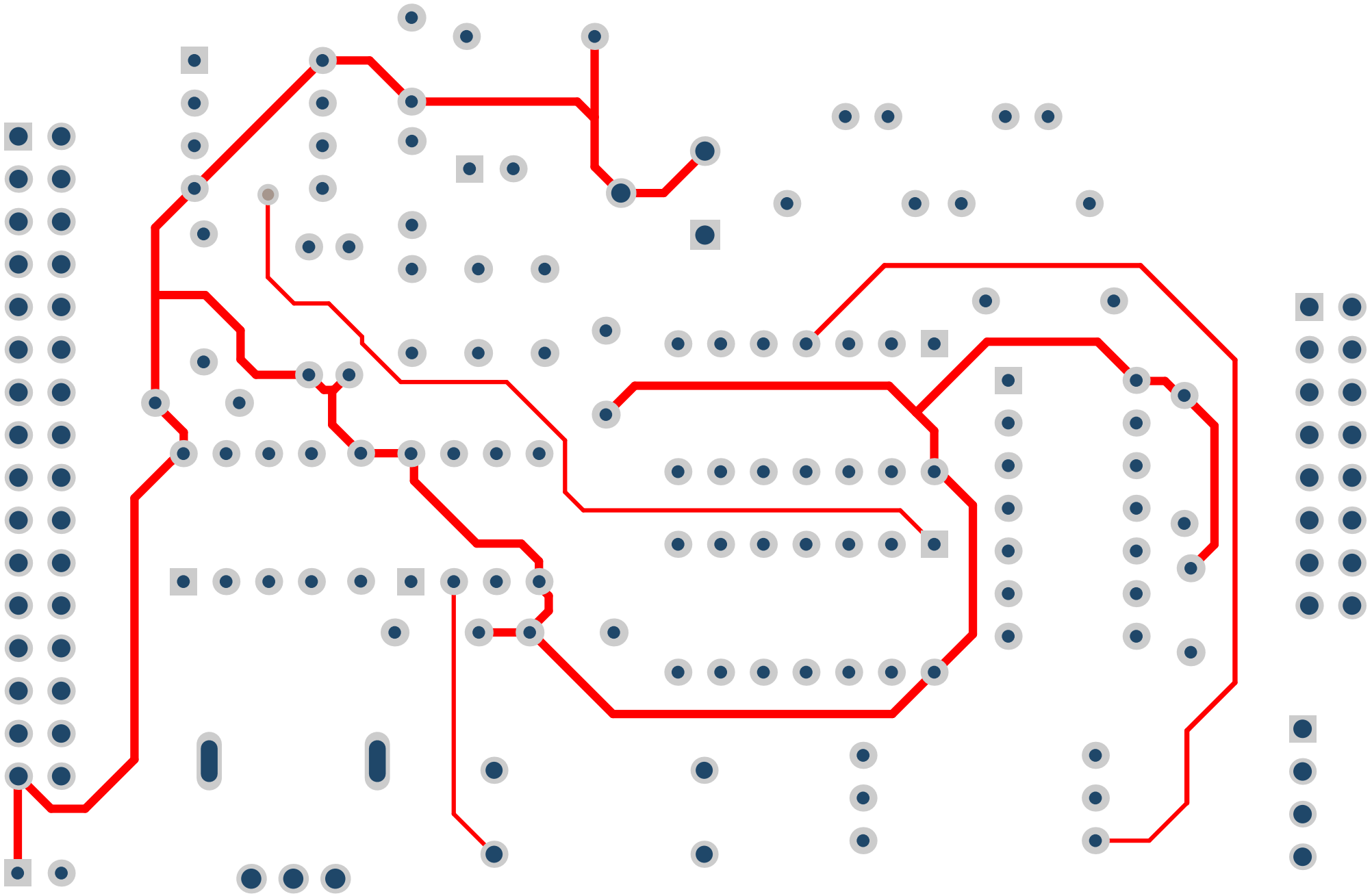

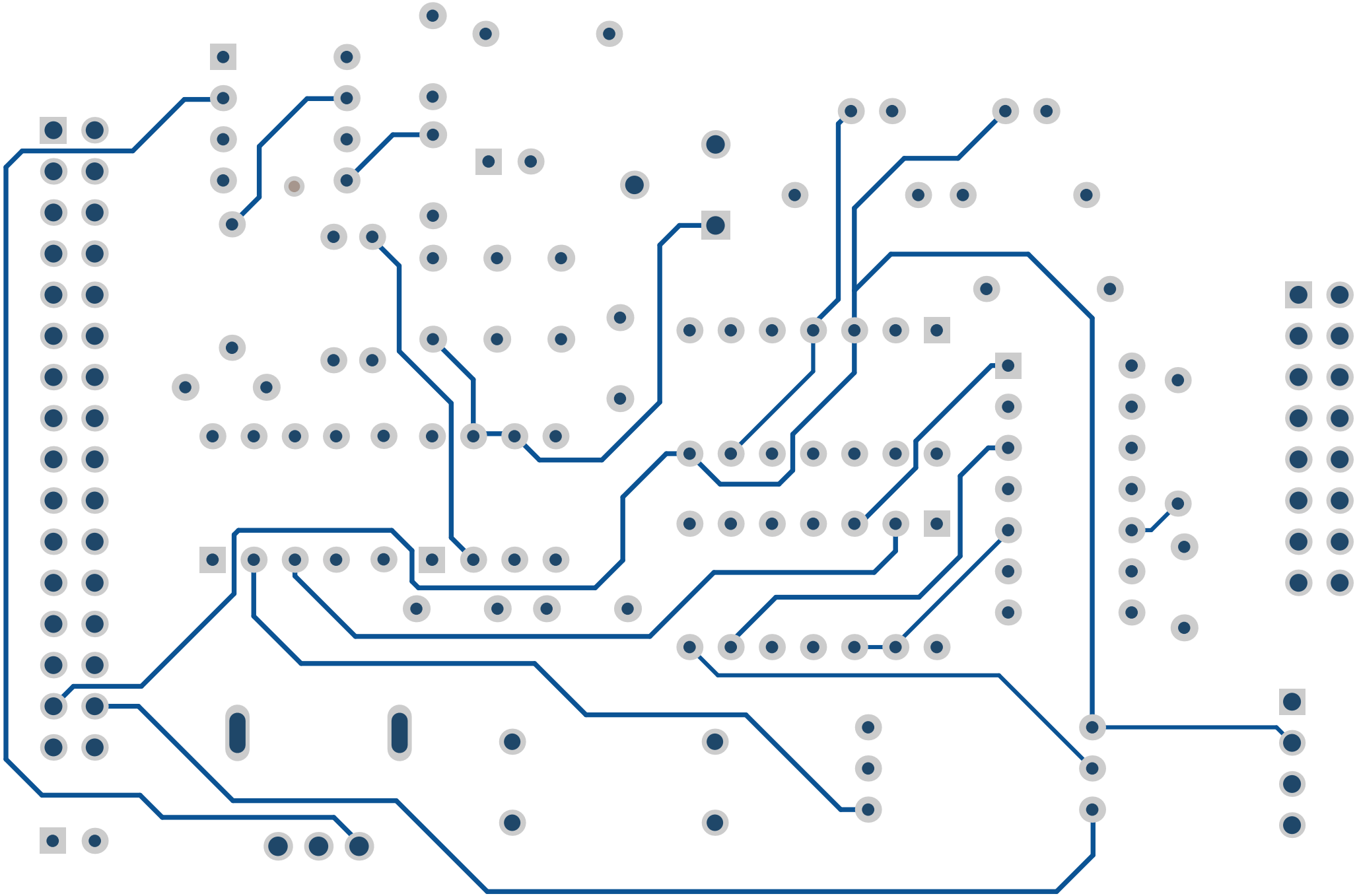

Bill of Materials

myCPU Clock

Description	Value	Q
555 Timer	555	3
Ceramic capacitor	10nF	3
Ceramic capacitor	470nF	1
Ceramic capacitor	100nF	6
Electrolytic capacitor 16v/50v	10µF	1
Electrolytic capacitor 16v/50v	0.22µF	1
Hex inverters	74xx04	1
Led 5mm Round	Red	1
Led 5mm Round	Green	1
Mini slide switch 2 pos, 3 pins	SP2T	2
Pin Header, THT, pitch 2.54mm, Dual Row, Vertical	16p	1
Pin Header, THT, pitch 2.54mm, Dual Row, Vertical	32p	1
Pin Header, THT, pitch 2.54mm, Single Row, Vertical	4p	1
Potentiometer vertical, rotary, 3pins	1M	1
Quad 2-input AND gates	74xx08	1
Quad 2-input OR gates.	74xx32	1
Resistor Axial	270	1
Resistor Axial	1K	4
Resistor Axial	3.3K	1
Resistor Axial	2K	1
Resistor Axial	4.7K	1
Resistor Axial	330	1
Tactile button 12 mm	12mm	1
Vertical variable resistor 3 pins	1M	1

Assembly List

myCPU Clock

Designator	Description	Value
C1	Electrolytic capacitor 16v/50v	10µF
C4	Electrolytic capacitor 16v/50v	0.22µF
C5	Ceramic capacitor	10nF
C6	Ceramic capacitor	10nF
C7	Ceramic capacitor	470nF
C8	Ceramic capacitor	10nF
C9	Ceramic capacitor	100nF
C10	Ceramic capacitor	100nF
C11	Ceramic capacitor	100nF
C12	Ceramic capacitor	100nF
C13	Ceramic capacitor	100nF
C14	Ceramic capacitor	100nf
D1	Led 5mm Round	Red
D2	Led 5mm Round	Green
IC1	555 Timer	555
IC2	555 Timer	555
IC3	555 Timer	555
IC4	Hex inverters	74xx04
IC5	Quad 2-input OR gates.	74xx32
IC6	Quad 2-input AND gates	74xx08
P1	Pin Header, THT, pitch 2.54mm, Dual Row, Vertical	16p
P2	Pin Header, THT, pitch 2.54mm, Dual Row, Vertical	32p
POT1	Potentiometer vertical, rotary, 3pins	1M
R1	Resistor Axial	270
R2	Resistor Axial	1K
R3	Vertical variable resistor 3 pins	1M
R4	Resistor Axial	1K
R5	Resistor Axial	1K
R6	Resistor Axial	1K
R7	Resistor Axial	3.3K
R8	Resistor Axial	2K
R10	Resistor Axial	4.7K
R12	Resistor Axial	330
SW1	Mini slide switch 2 pos, 3 pins	SP2T
SW2	Mini slide switch 2 pos, 3 pins	SP2T
T1	Pin Header, THT, pitch 2.54mm, Single Row, Vertical	4p
TACT1	Tactile button 12 mm	12mm