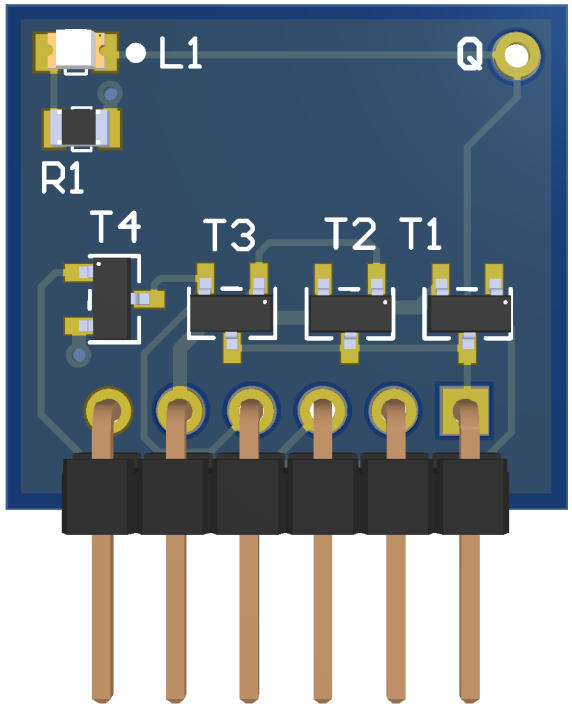
L1
Q
R1
T4
T3
T2
T1

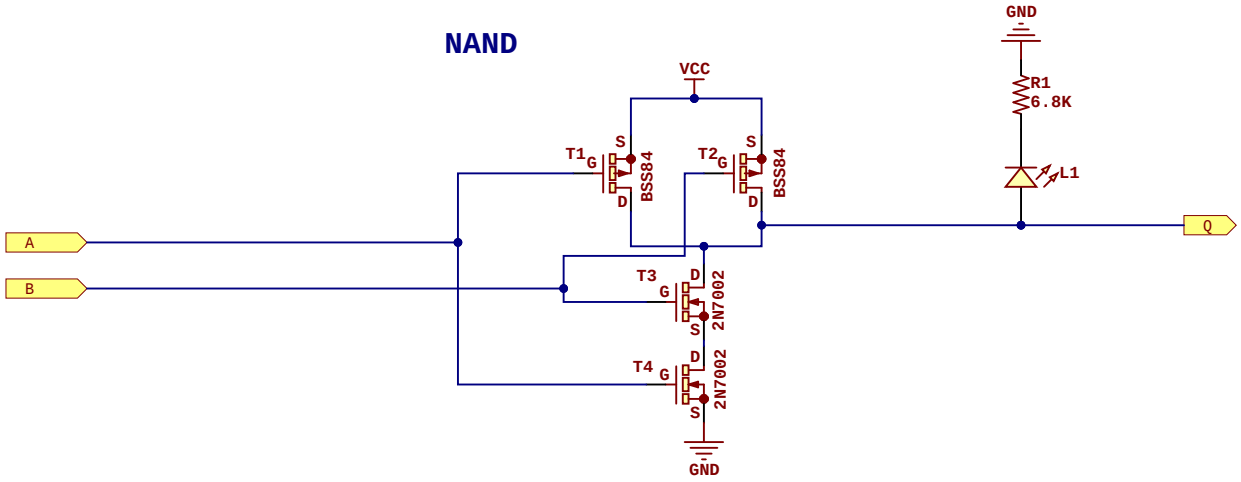

Project: CMOS NAND Gate

Revision: 15

Date: 06-Feb-26

Author: Rafa Hernández

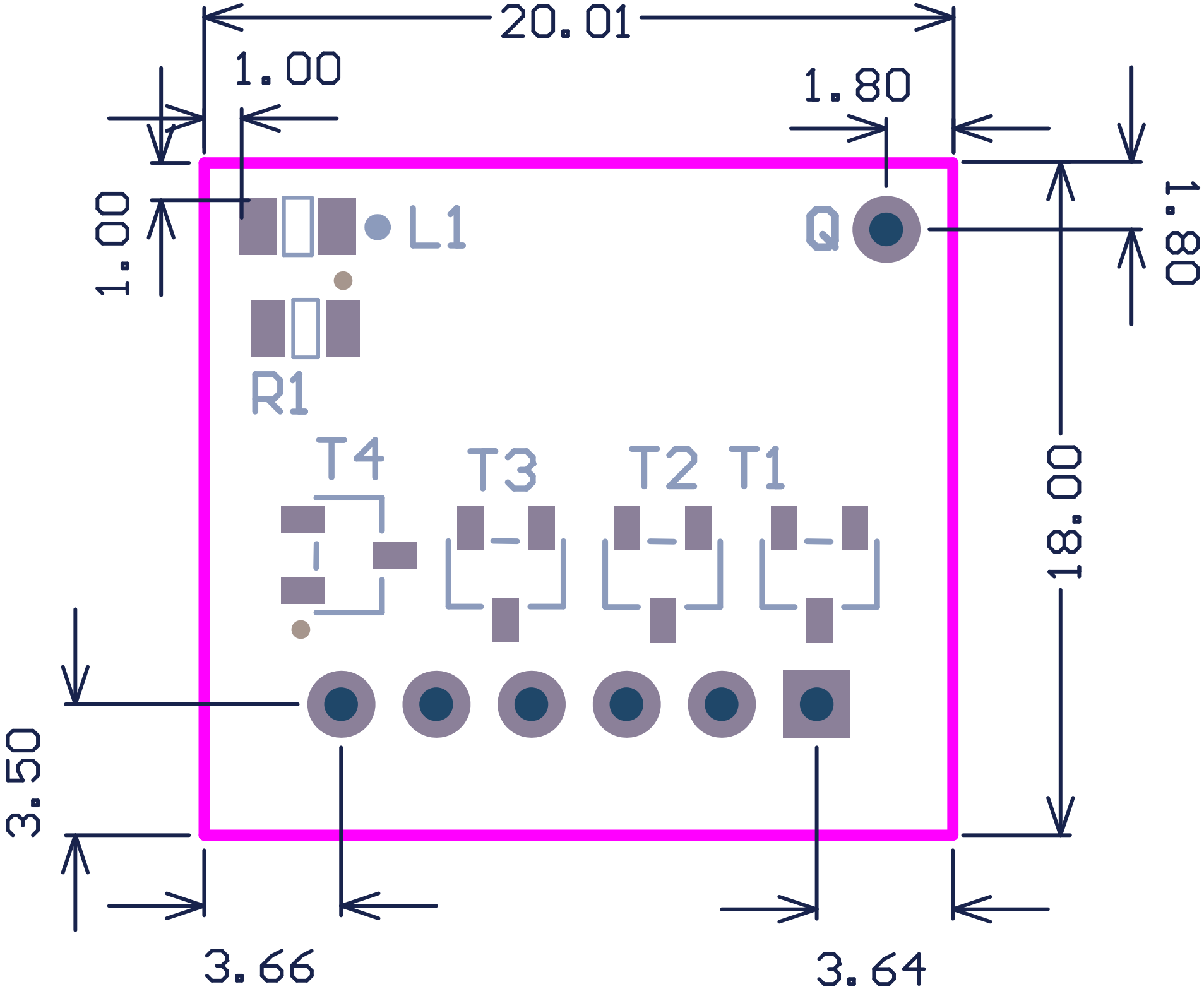
20.01
1.00
1.80
1.00
1.80
L1
Q
R1
T4
T3
T2
T1
18.00
3.50
3.66
3.64

Bill of Materials

CMOS NAND Gate

Description	Value	Q
Led SMD 0805	Red	1
Resistor SMD 0805	6.8K	1
PMOS Enhanced transistor SOT-23	BSS84	2
NMOS Enhanced transistor SOT-23	2N7002	2

Assembly List

CMOS NAND Gate

Designator	Description	Value
L1	Led SMD 0805	Red
R1	Resistor SMD 0805	6.8K
T1	PMOS Enhanced transistor SOT-23	BSS84
T2	PMOS Enhanced transistor SOT-23	BSS84
T3	NMOS Enhanced transistor SOT-23	2N7002
T4	NMOS Enhanced transistor SOT-23	2N7002