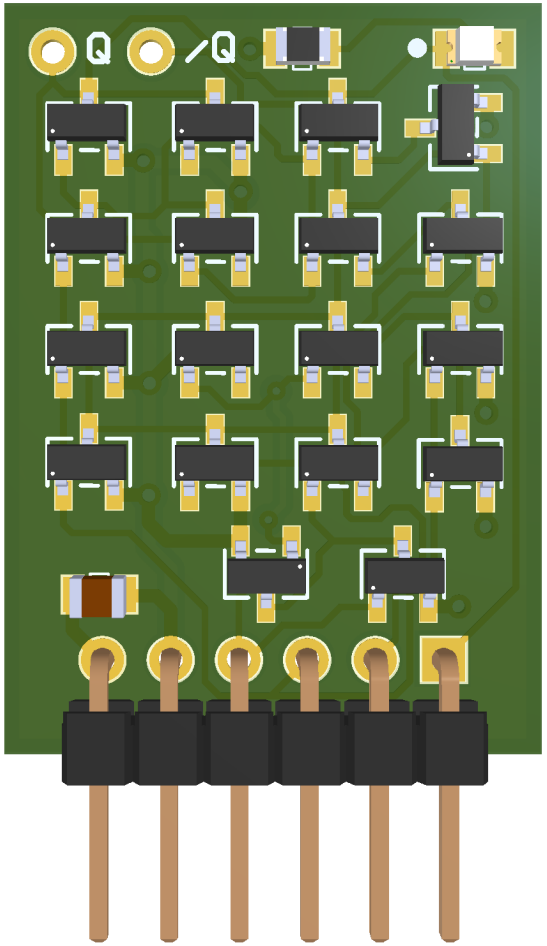
Q
/Q

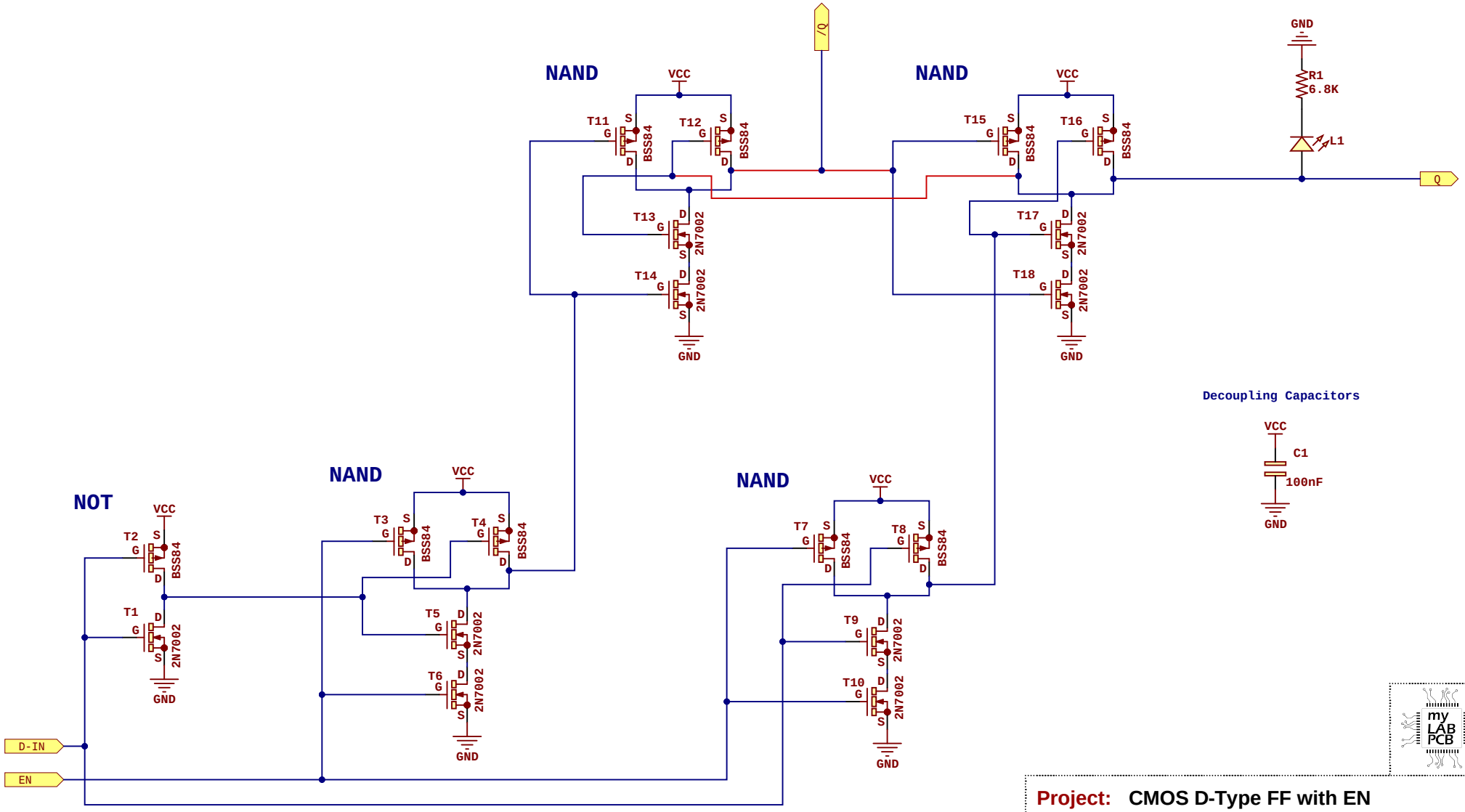

Project: CMOS D-Type FF with EN

Revision: 15 **Date:** 23-Mar-26

Author: Rafa Hernández

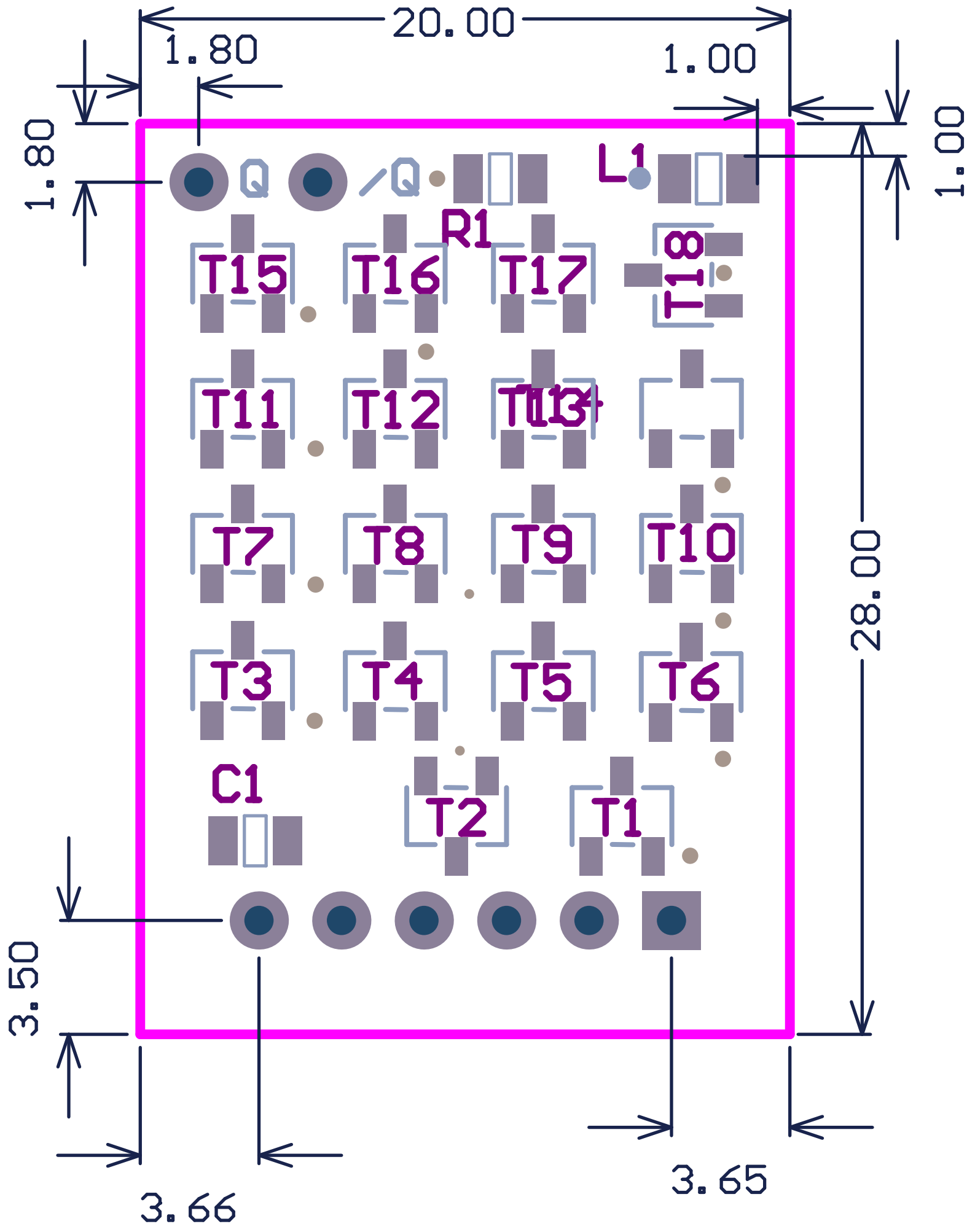
20.00
1.80
1.00
1.80
1.00
Q
/Q
L1
R1
T15
T16
T17
T18
T11
T12
T13
T14
T7
T8
T9
T10
T3
T4
T5
T6
C1
T2
T1
28.00
3.50
3.66
3.65

Bill of Materials

CMOS D-Type FF with EN

Description	Value	Q
Ceramic capacitor	100nF	1
Led SMD 0805	Red	1
Resistor SMD 0805	6.8K	1
NMOS Enhanced transistor	2N7002	9
PMOS Enhanced transistor	BSS84	9

Assembly List

CMOS D-Type FF with EN

Designator	Description	Value
C1	Ceramic capacitor	100nF
L1	Led SMD 0805	Red
R1	Resistor SMD 0805	6.8K
T1	NMOS Enhanced transistor	2N7002
T2	PMOS Enhanced transistor	BSS84
T3	PMOS Enhanced transistor	BSS84
T4	PMOS Enhanced transistor	BSS84
T5	NMOS Enhanced transistor	2N7002
T6	NMOS Enhanced transistor	2N7002
T7	PMOS Enhanced transistor	BSS84
T8	PMOS Enhanced transistor	BSS84
T9	NMOS Enhanced transistor	2N7002
T10	NMOS Enhanced transistor	2N7002
T11	PMOS Enhanced transistor	BSS84
T12	PMOS Enhanced transistor	BSS84
T13	NMOS Enhanced transistor	2N7002
T14	NMOS Enhanced transistor	2N7002
T15	PMOS Enhanced transistor	BSS84
T16	PMOS Enhanced transistor	BSS84
T17	NMOS Enhanced transistor	2N7002
T18	NMOS Enhanced transistor	2N7002