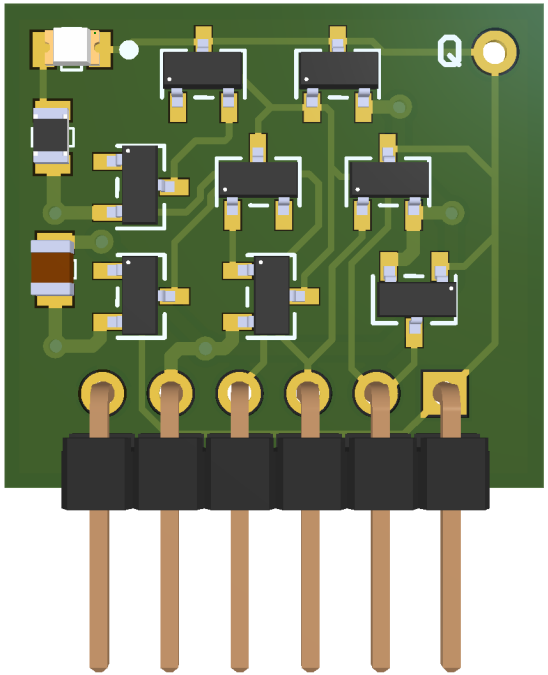
Q

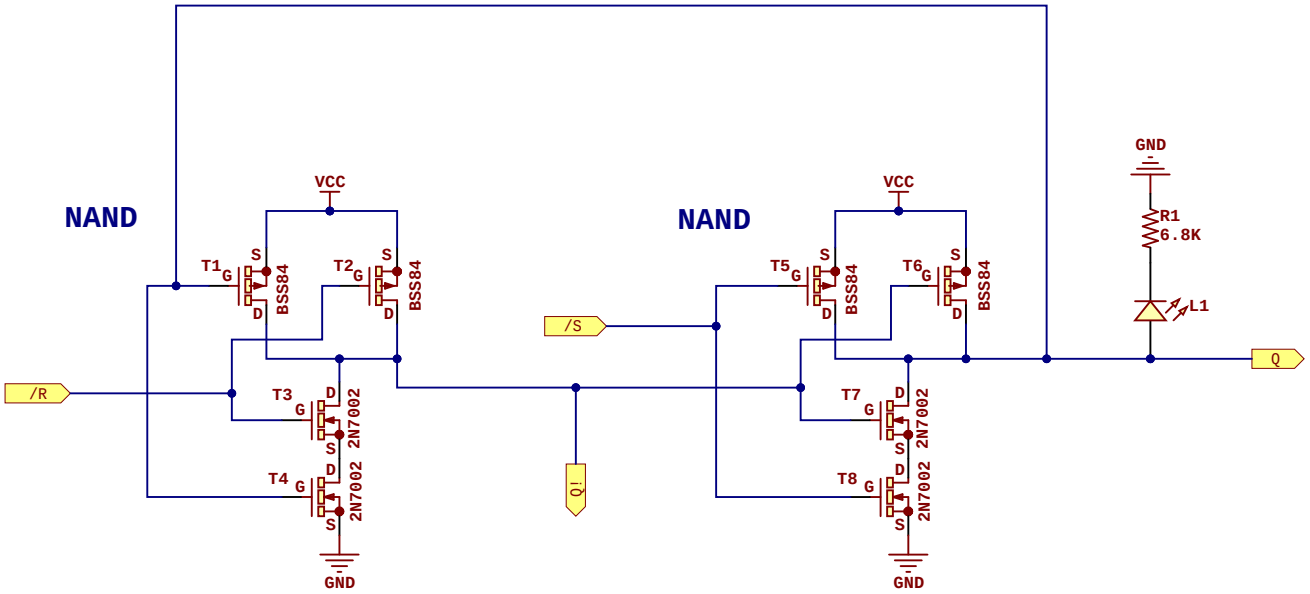

Inputs are active LOW so keep in mind that defaults inputs state must be HIGH.

Decoupling Capacitors

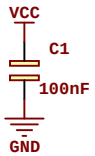

Project: CMOS SR Latch (NAND)	
Revision: 10	**Date:** 24-Mar-26
Author: Rafa Hernández	

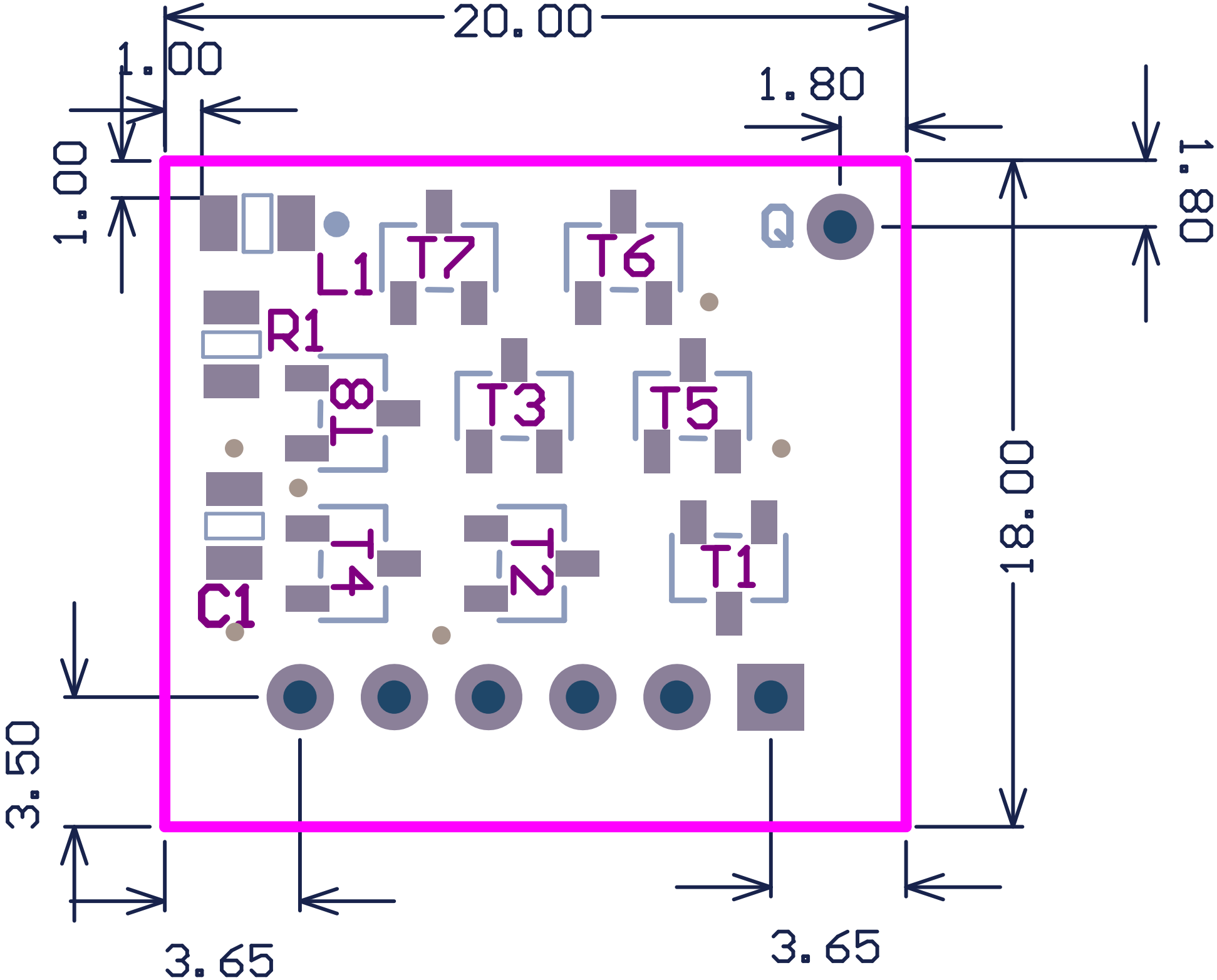
20.00
1.00
1.80
1.00
1.80
Q
L1
T7
T6
R1
T8
T3
T5
T4
T2
T1
C1
18.00
3.50
3.65
3.65

Bill of Materials

CMOS SR Latch (NAND)

Description	Value	Q
Ceramic capacitor	100nF	1
Led SMD 0805	Red	1
Resistor SMD 0805	6.8K	1
PMOS Enhanced transistor SOT-23	BSS84	4
NMOS Enhanced transistor SOT-23	2N7002	4

Assembly List

CMOS SR Latch (NAND)

Designator	Description	Value
C1	Ceramic capacitor	100nF
L1	Led SMD 0805	Red
R1	Resistor SMD 0805	6.8K
T1	PMOS Enhanced transistor SOT-23	BSS84
T2	PMOS Enhanced transistor SOT-23	BSS84
T3	NMOS Enhanced transistor SOT-23	2N7002
T4	NMOS Enhanced transistor SOT-23	2N7002
T5	PMOS Enhanced transistor SOT-23	BSS84
T6	PMOS Enhanced transistor SOT-23	BSS84
T7	NMOS Enhanced transistor SOT-23	2N7002
T8	NMOS Enhanced transistor SOT-23	2N7002