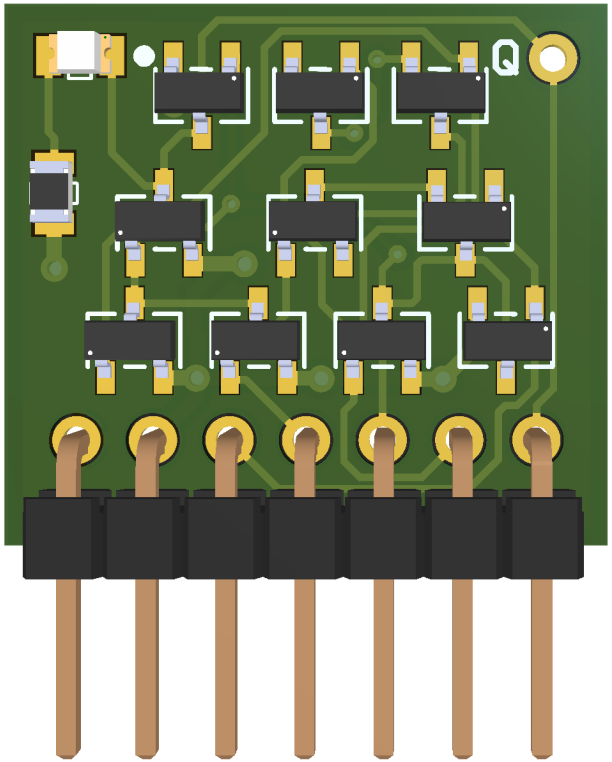

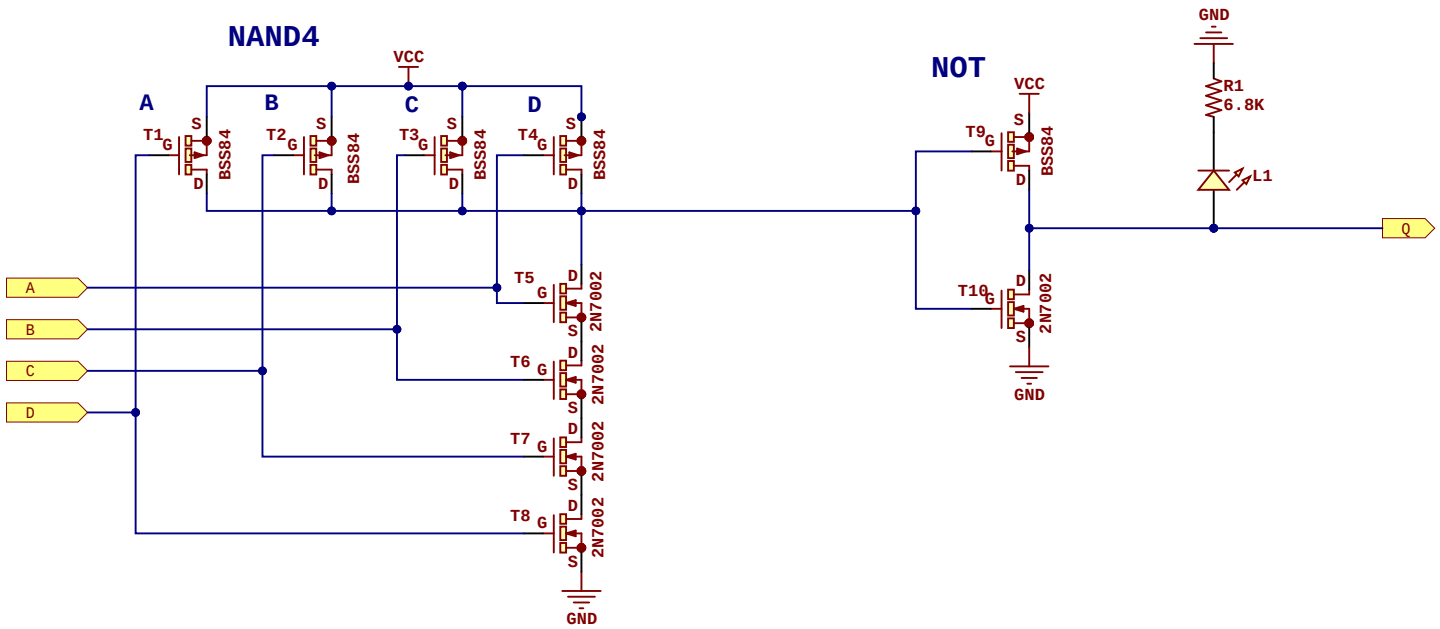

Project: CMOS AND4 Gate

Revision: 7 **Date:** 24-Mar-26

Author: Rafa Hernández

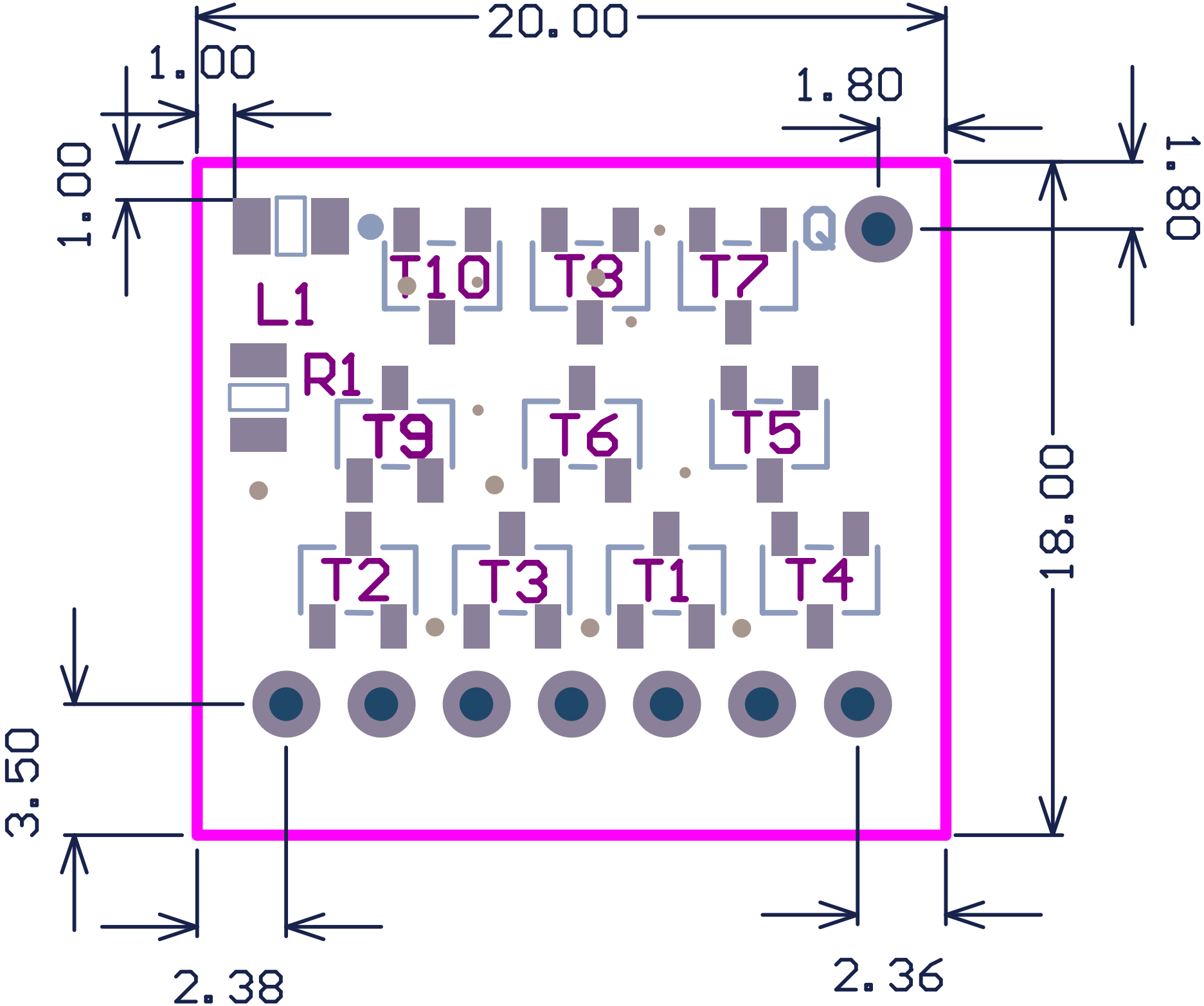
20.00
1.00
1.80
1.00
1.80
Q
T10
T8
T7
L1
R1
T9
T6
T5
T2
T3
T1
T4
18.00
3.50
2.38
2.36

Bill of Materials

CMOS AND4 Gate

Description	Value	Q
Led SMD 0805	Red	1
Resistor SMD 0805	6.8K	1
PMOS Enhanced transistor SOT-23	BSS84	5
NMOS Enhanced transistor SOT-23	2N7002	5

Assembly List

CMOS AND4 Gate

Designator	Description	Value
L1	Led SMD 0805	Red
R1	Resistor SMD 0805	6.8K
T1	PMOS Enhanced transistor SOT-23	BSS84
T2	PMOS Enhanced transistor SOT-23	BSS84
T3	PMOS Enhanced transistor SOT-23	BSS84
T4	PMOS Enhanced transistor SOT-23	BSS84
T5	NMOS Enhanced transistor SOT-23	2N7002
T6	NMOS Enhanced transistor SOT-23	2N7002
T7	NMOS Enhanced transistor SOT-23	2N7002
T8	NMOS Enhanced transistor SOT-23	2N7002
T9	PMOS Enhanced transistor SOT-23	BSS84
T10	NMOS Enhanced transistor SOT-23	2N7002