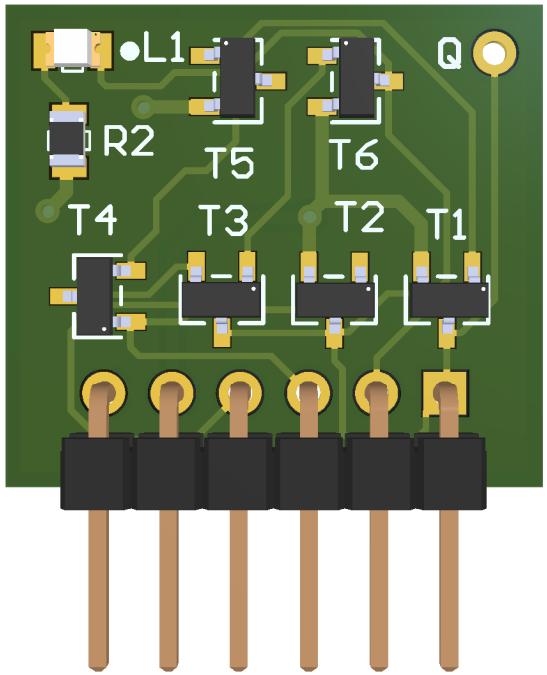
L1
Q
R2
T5
T6
T4
T3
T2
T1

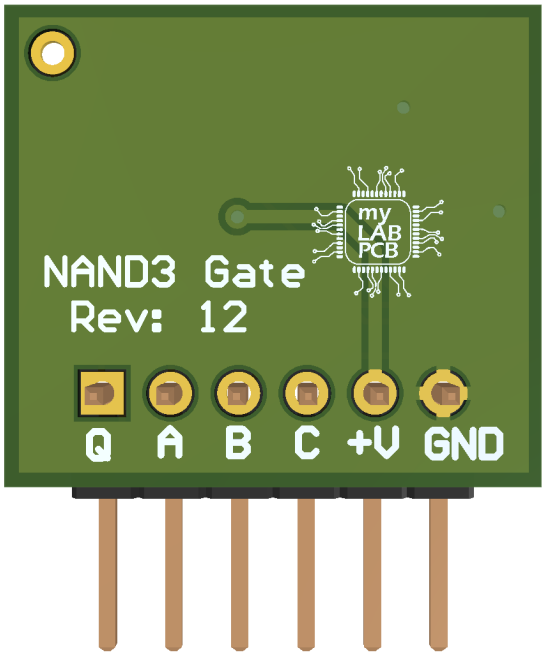
NAND3 Gate
Rev: 12
my
LAB
PCB
Q
A
B
C
+V
GND

Text

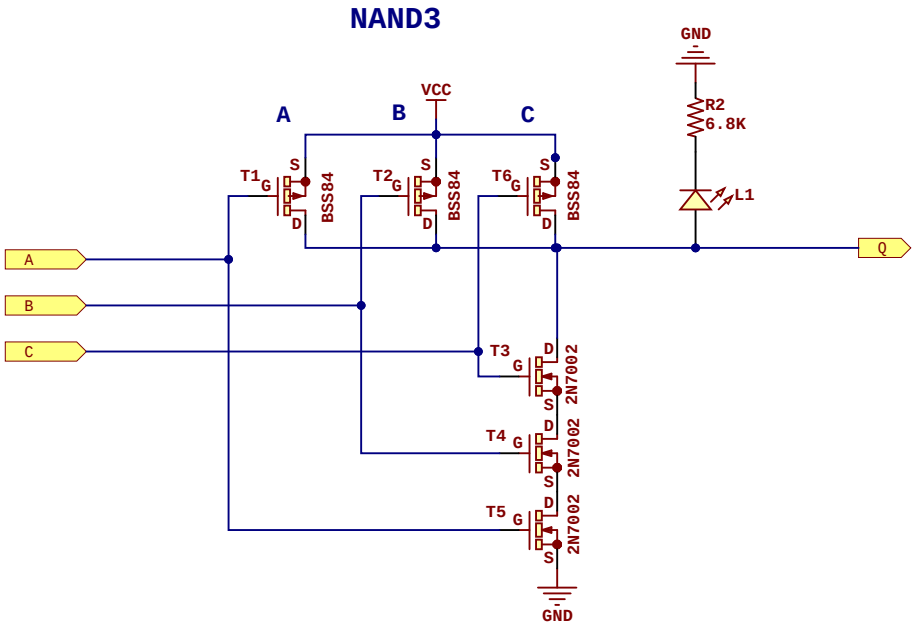

Project: CMOS NAND3 Gate

Revision: 12

Date: 24-Mar-26

Author: Rafa Hernández

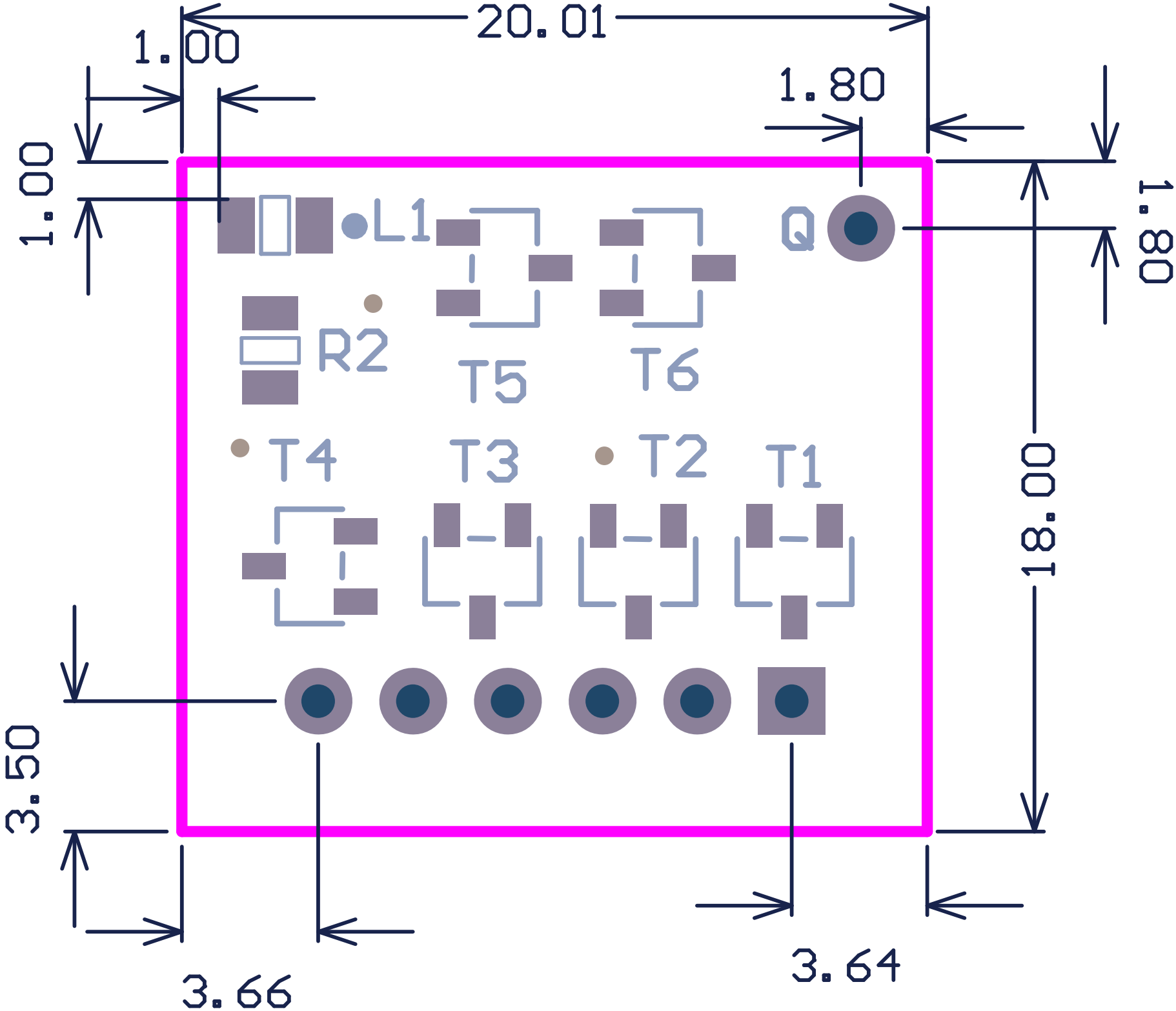
20.01
1.00
1.80
1.00
1.80
L1
Q
R2
T5
T6
T4
T3
T2
T1
18.00
3.50
3.66
3.64

Bill of Materials

CMOS NAND3 Gate

Description	Value	Q
Led SMD 0805	Red	1
Resistor SMD 0805	6.8K	1
PMOS Enhanced transistor SOT-23	BSS84	3
NMOS Enhanced transistor SOT-23	2N7002	3

Assembly List

CMOS NAND3 Gate

Designator	Description	Value
L1	Led SMD 0805	Red
R2	Resistor SMD 0805	6.8K
T1	PMOS Enhanced transistor SOT-23	BSS84
T2	PMOS Enhanced transistor SOT-23	BSS84
T3	NMOS Enhanced transistor SOT-23	2N7002
T4	NMOS Enhanced transistor SOT-23	2N7002
T5	NMOS Enhanced transistor SOT-23	2N7002
T6	PMOS Enhanced transistor SOT-23	BSS84