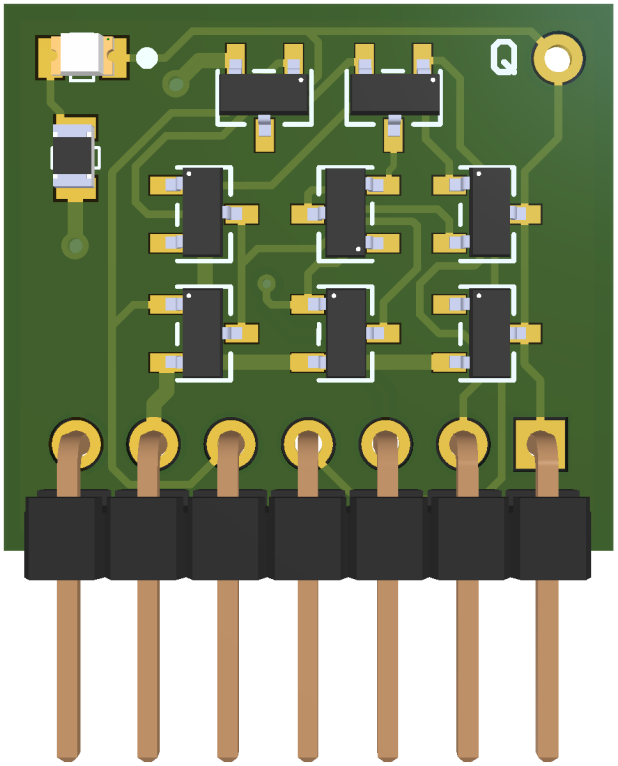
Q

Text

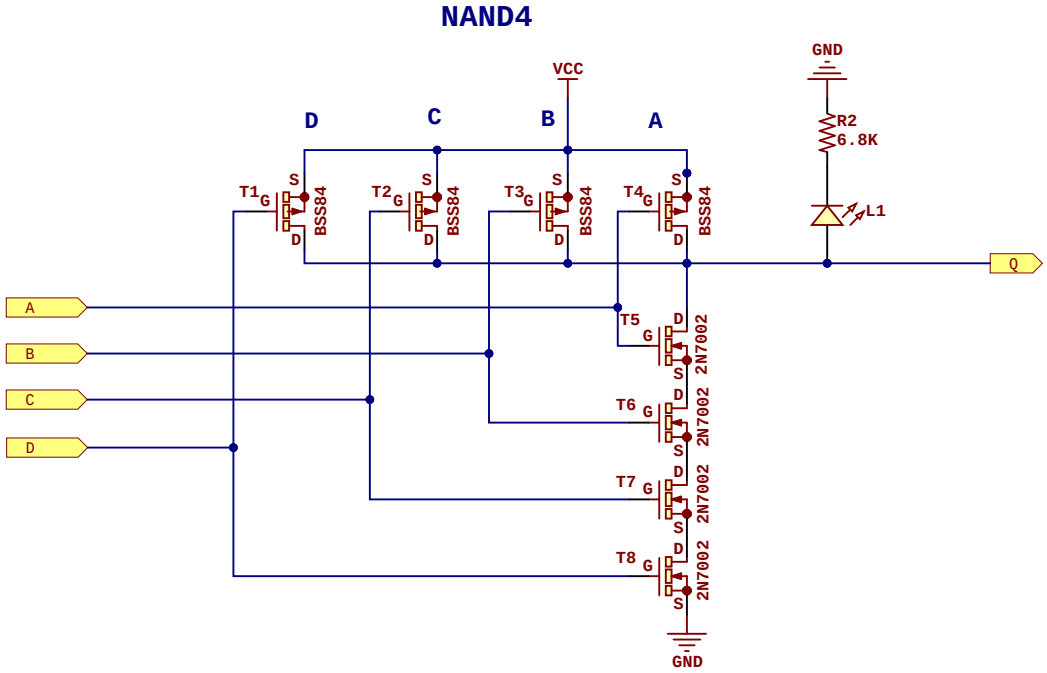

Project: CMOS NAND4 Gate

Revision: 7 **Date:** 15-Oct-25

Author: Rafa Hernández

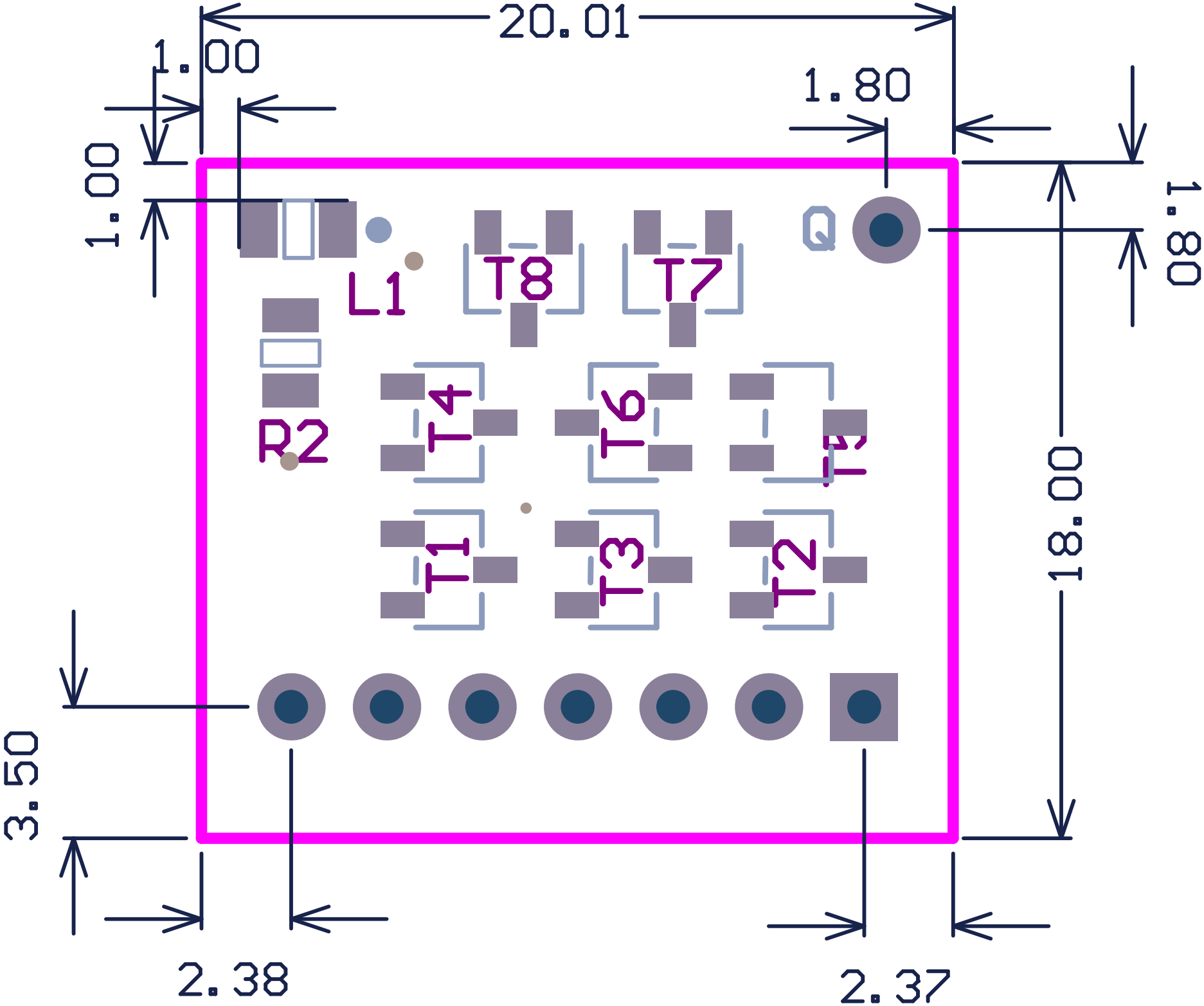
20.01
1.00
1.80
1.00
1.80
L1
T8
T7
Q
R2
T4
T6
T5
T1
T3
T2
18.00
3.50
2.38
2.37

Bill of Materials

CMOS NAND4 Gate

Description	Value	Q
Led SMD 0805	Red	1
Resistor SMD 0805	6.8K	1
PMOS Enhanced transistor SOT-23	BSS84	4
NMOS Enhanced transistor SOT-23	2N7002	4

Assembly List

CMOS NAND4 Gate

Designator	Description	Value
L1	Led SMD 0805	Red
R2	Resistor SMD 0805	6.8K
T1	PMOS Enhanced transistor SOT-23	BSS84
T2	PMOS Enhanced transistor SOT-23	BSS84
T3	PMOS Enhanced transistor SOT-23	BSS84
T4	PMOS Enhanced transistor SOT-23	BSS84
T5	NMOS Enhanced transistor SOT-23	2N7002
T6	NMOS Enhanced transistor SOT-23	2N7002
T7	NMOS Enhanced transistor SOT-23	2N7002
T8	NMOS Enhanced transistor SOT-23	2N7002