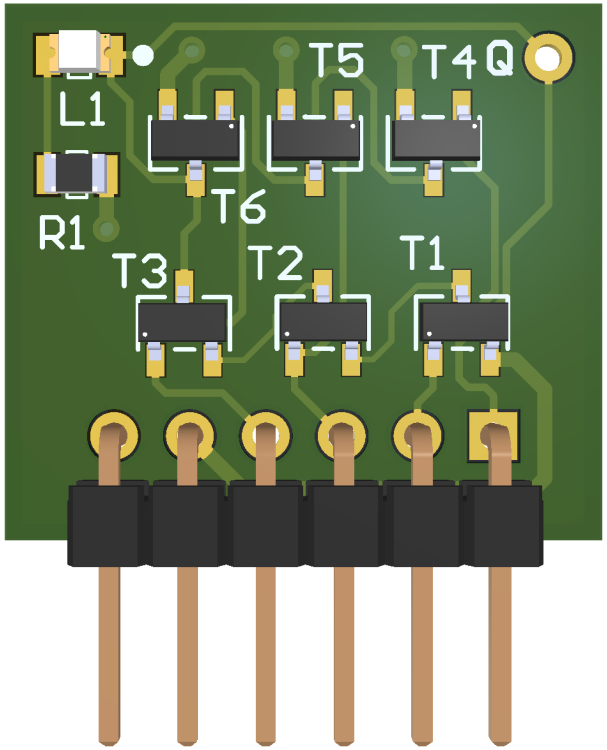
L1
R1
T5
T4
Q
T6
T3
T2
T1

NOR3

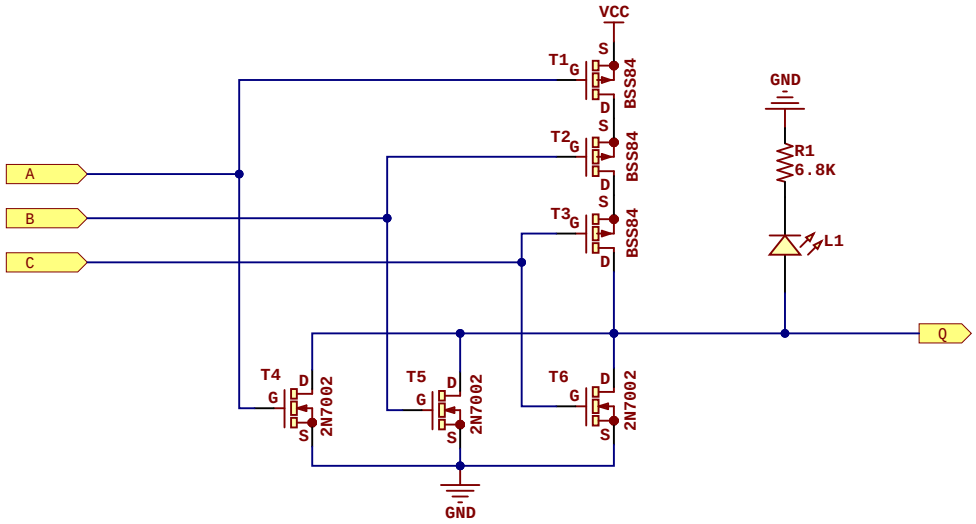

Project: CMOS NOR3 Gate

Revision: 8 **Date:** 24-Mar-26

Author: Rafa Hernández

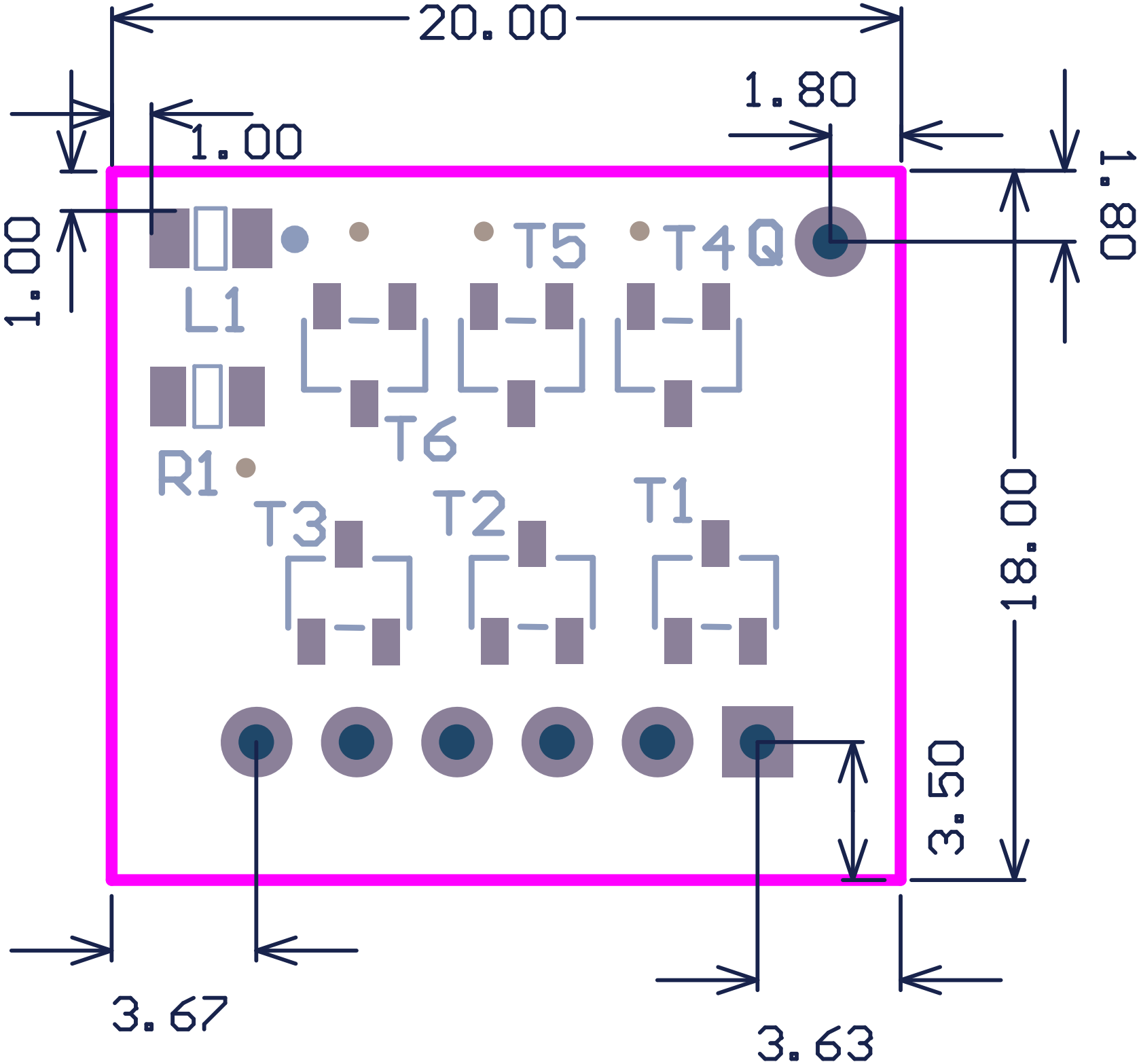
20.00
1.80
1.00
1.00
1.80
T5
T4
Q
L1
T6
R1
T3
T2
T1
18.00
3.50
3.67
3.63

Bill of Materials

CMOS NOR3 Gate

Description	Value	Q
Led SMD 0805	Red	1
Resistor SMD 0805	6.8K	1
PMOS Enhanced transistor SOT-23	BSS84	3
NMOS Enhanced transistor SOT-23	2N7002	3

Assembly List

CMOS NOR3 Gate

Designator	Description	Value
L1	Led SMD 0805	Red
R1	Resistor SMD 0805	6.8K
T1	PMOS Enhanced transistor SOT-23	BSS84
T2	PMOS Enhanced transistor SOT-23	BSS84
T3	PMOS Enhanced transistor SOT-23	BSS84
T4	NMOS Enhanced transistor SOT-23	2N7002
T5	NMOS Enhanced transistor SOT-23	2N7002
T6	NMOS Enhanced transistor SOT-23	2N7002