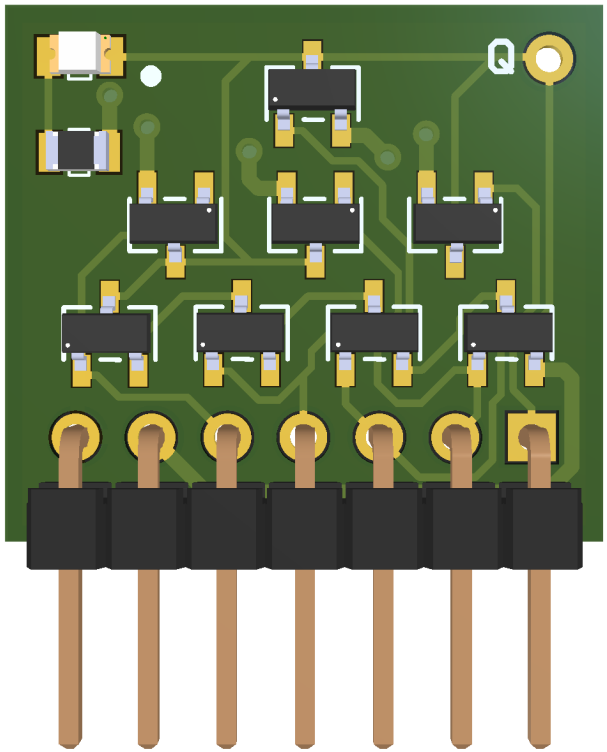
Q

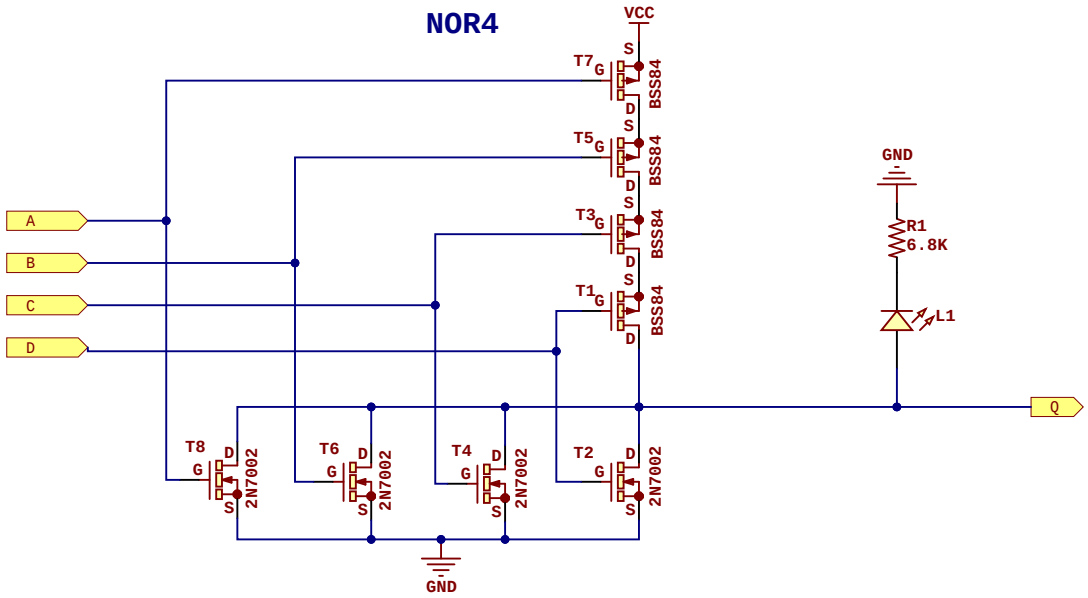

Project: CMOS NOR4 Gate

Revision: 5 **Date:** 24-Mar-26

Author: Rafa Hernández

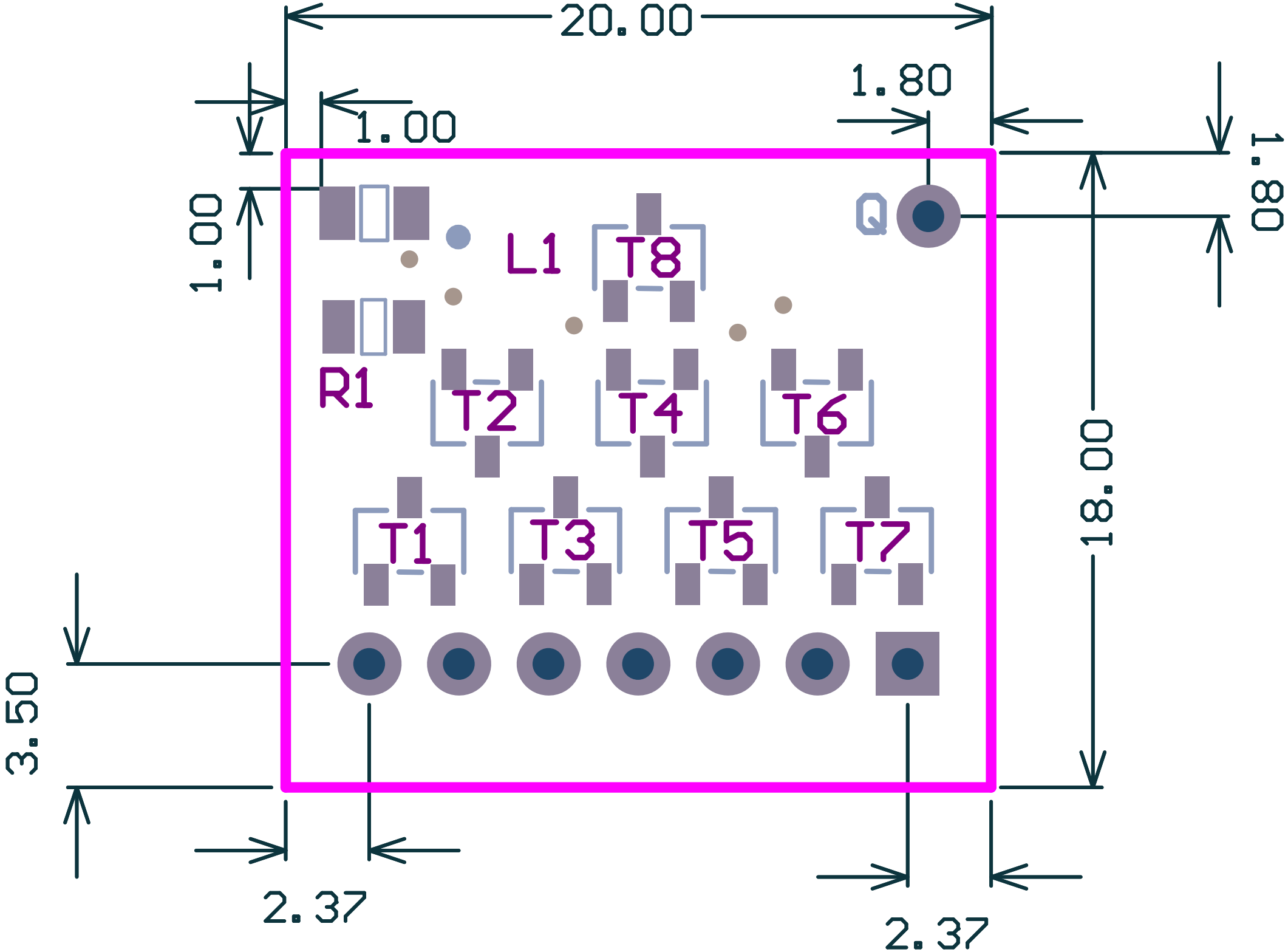
20.00
1.80
1.00
1.00
1.80
Q
L1
T8
R1
T2
T4
T6
T1
T3
T5
T7
18.00
3.50
2.37
2.37

Bill of Materials

CMOS NOR4 Gate

Description	Value	Q
Led SMD 0805	Red	1
Resistor SMD 0805	6.8K	1
PMOS Enhanced transistor SOT-23	BSS84	4
NMOS Enhanced transistor SOT-23	2N7002	4

Assembly List

CMOS NOR4 Gate

Designator	Description	Value
L1	Led SMD 0805	Red
R1	Resistor SMD 0805	6.8K
T1	PMOS Enhanced transistor SOT-23	BSS84
T2	NMOS Enhanced transistor SOT-23	2N7002
T3	PMOS Enhanced transistor SOT-23	BSS84
T4	NMOS Enhanced transistor SOT-23	2N7002
T5	PMOS Enhanced transistor SOT-23	BSS84
T6	NMOS Enhanced transistor SOT-23	2N7002
T7	PMOS Enhanced transistor SOT-23	BSS84
T8	NMOS Enhanced transistor SOT-23	2N7002