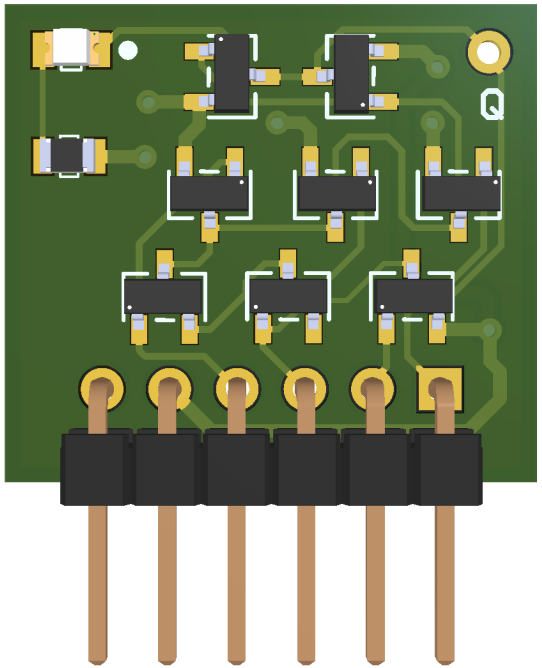
Q

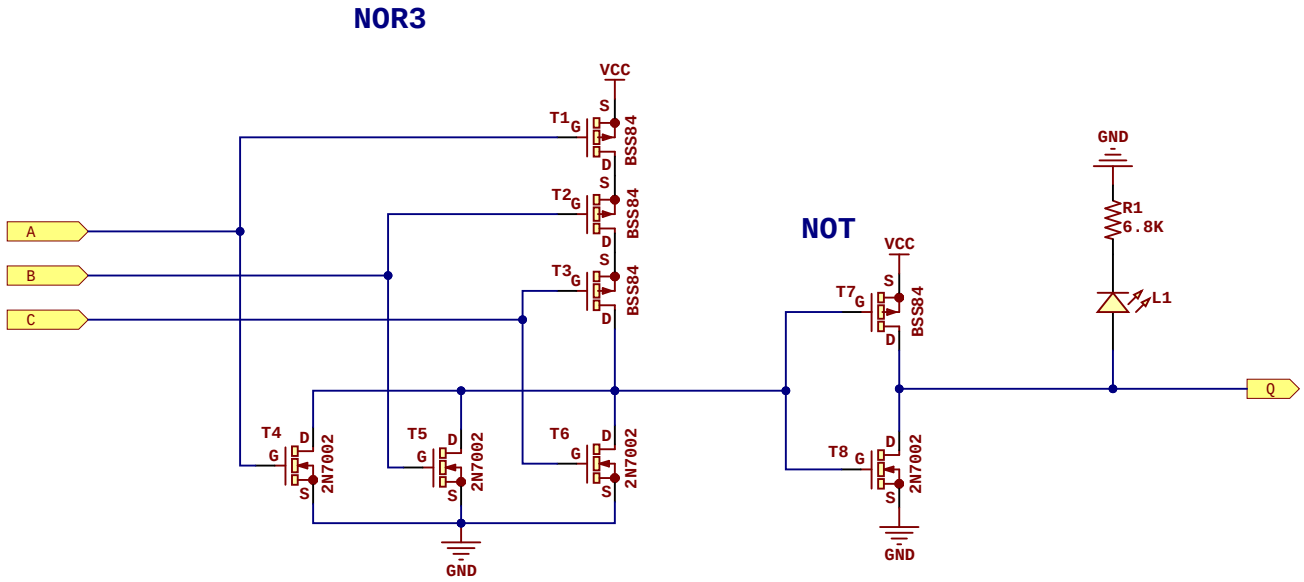

Project: CMOS OR3 Gate	
Revision: 7	**Date:** 24-Mar-26
Author: Rafa Hernández	

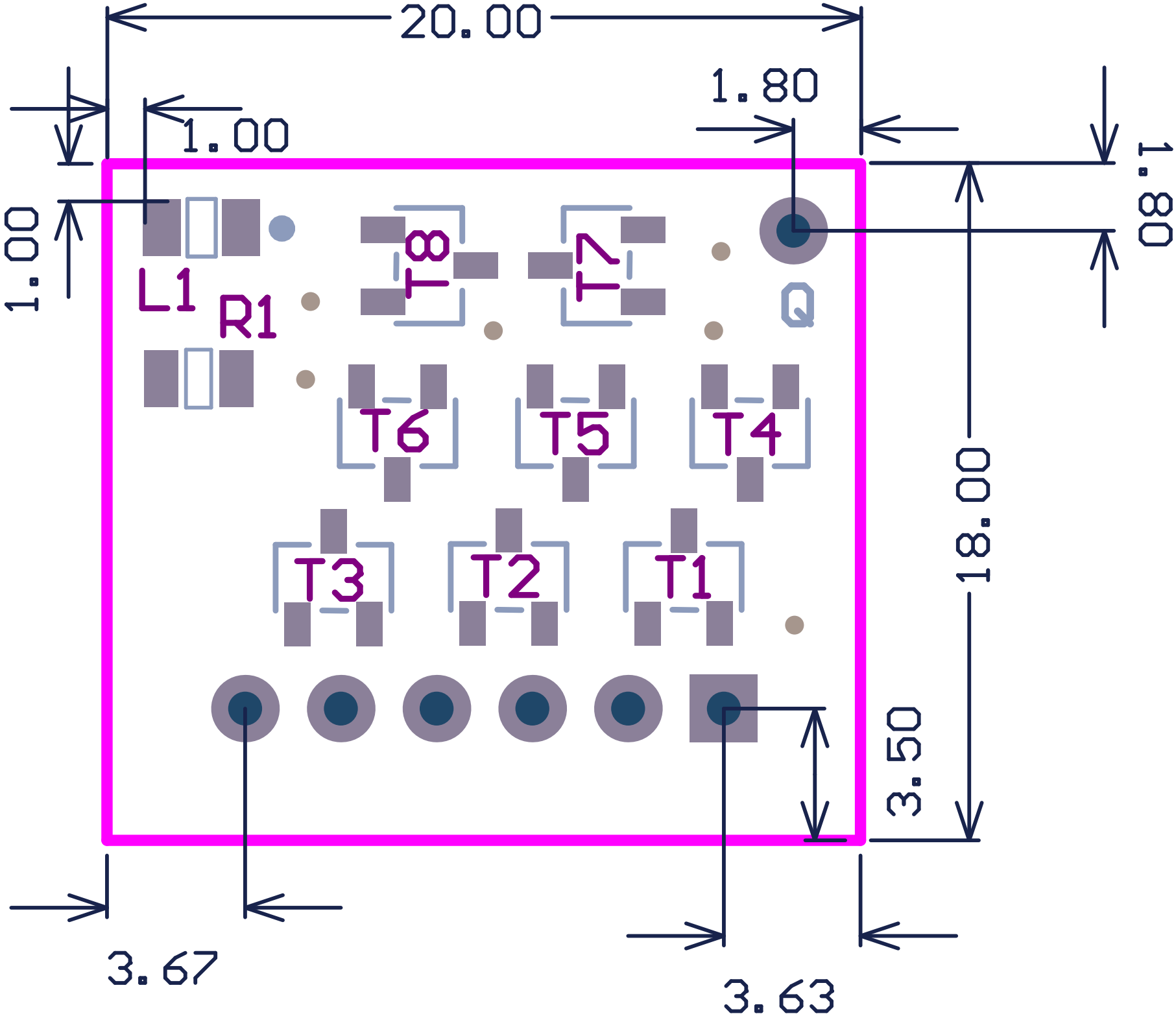
20.00
1.80
1.00
1.00
1.80
L1
R1
T8
T7
Q
T6
T5
T4
T3
T2
T1
18.00
3.50
3.67
3.63

Bill of Materials

CMOS OR3 Gate

Description	Value	Q
Led SMD 0805	Red	1
Resistor SMD 0805	6.8K	1
PMOS Enhanced transistor SOT-23	BSS84	4
NMOS Enhanced transistor SOT-23	2N7002	4

Assembly List

CMOS OR3 Gate

Designator	Description	Value
L1	Led SMD 0805	Red
R1	Resistor SMD 0805	6.8K
T1	PMOS Enhanced transistor SOT-23	BSS84
T2	PMOS Enhanced transistor SOT-23	BSS84
T3	PMOS Enhanced transistor SOT-23	BSS84
T4	NMOS Enhanced transistor SOT-23	2N7002
T5	NMOS Enhanced transistor SOT-23	2N7002
T6	NMOS Enhanced transistor SOT-23	2N7002
T7	PMOS Enhanced transistor SOT-23	BSS84
T8	NMOS Enhanced transistor SOT-23	2N7002