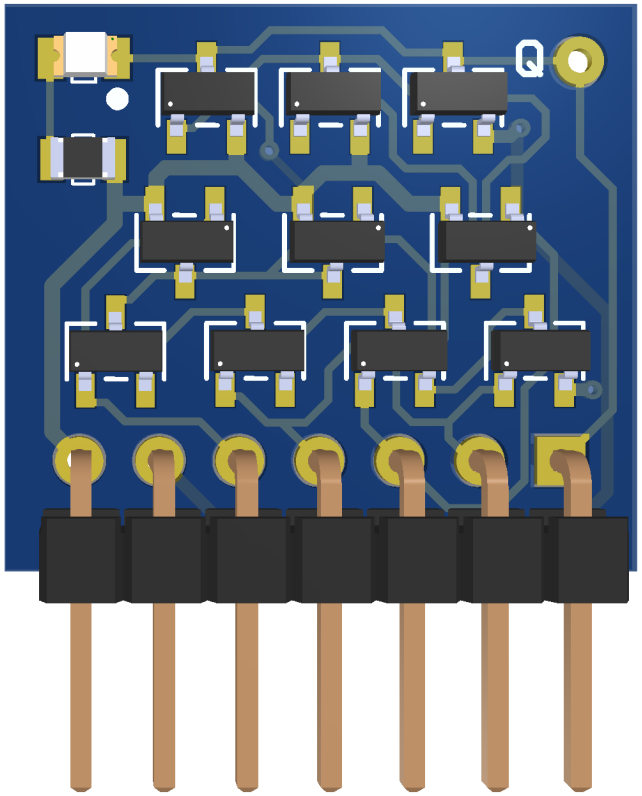
Q

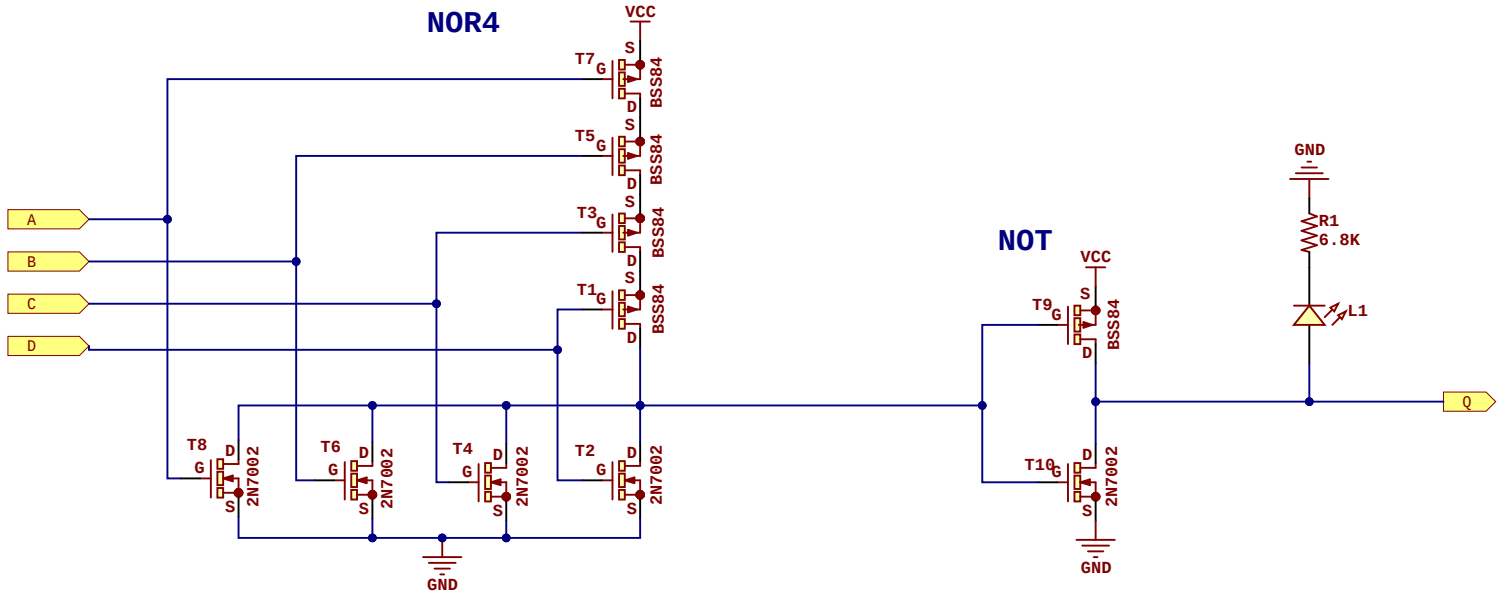

Project: CMOS OR4 Gate

Revision: 3 **Date:** 21-Sep-25

Author: Rafa Hernández

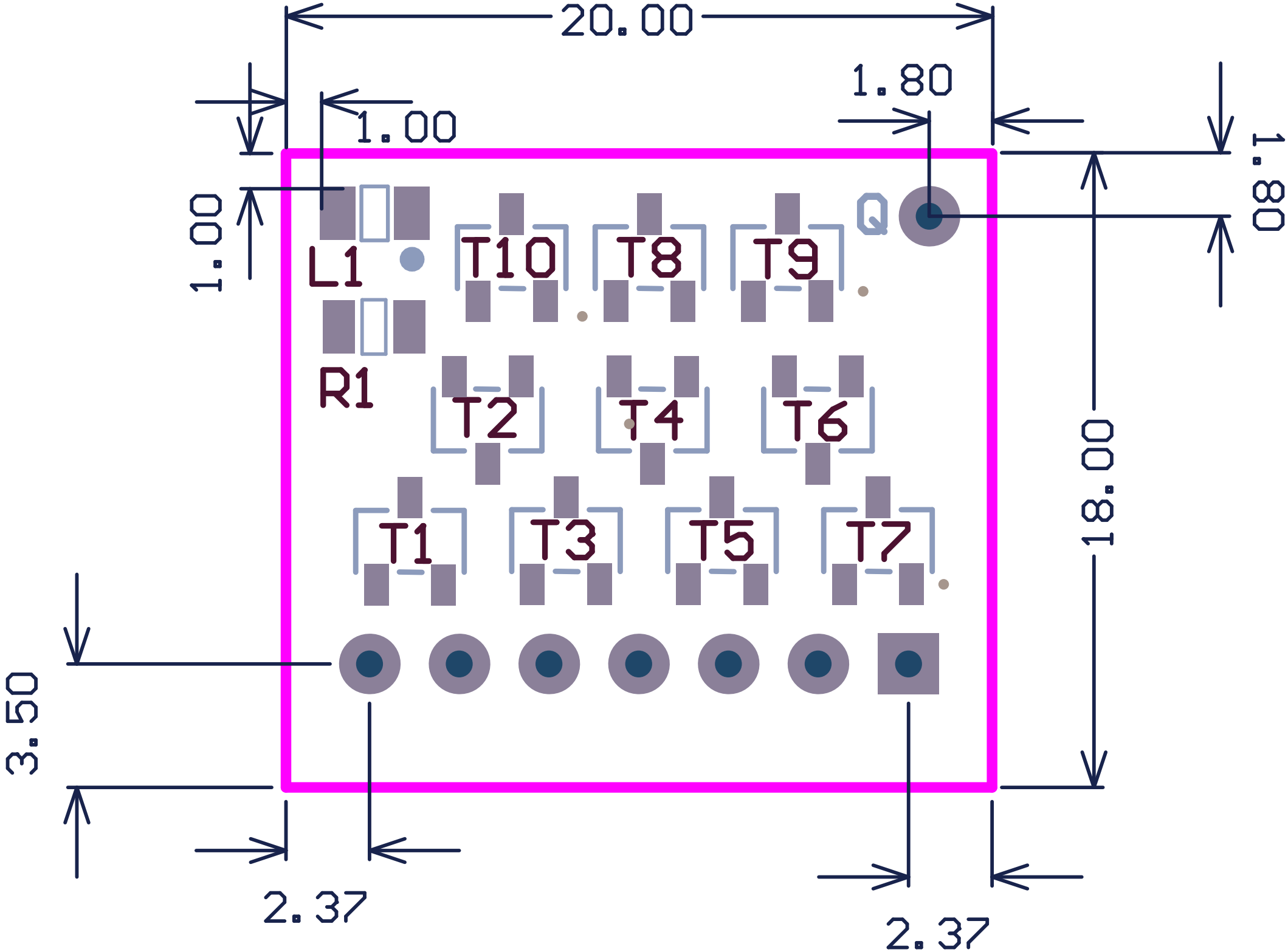
20.00
1.80
1.00
1.00
1.80
L1
R1
T10
T8
T9
Q
T2
T4
T6
T1
T3
T5
T7
18.00
3.50
2.37
2.37

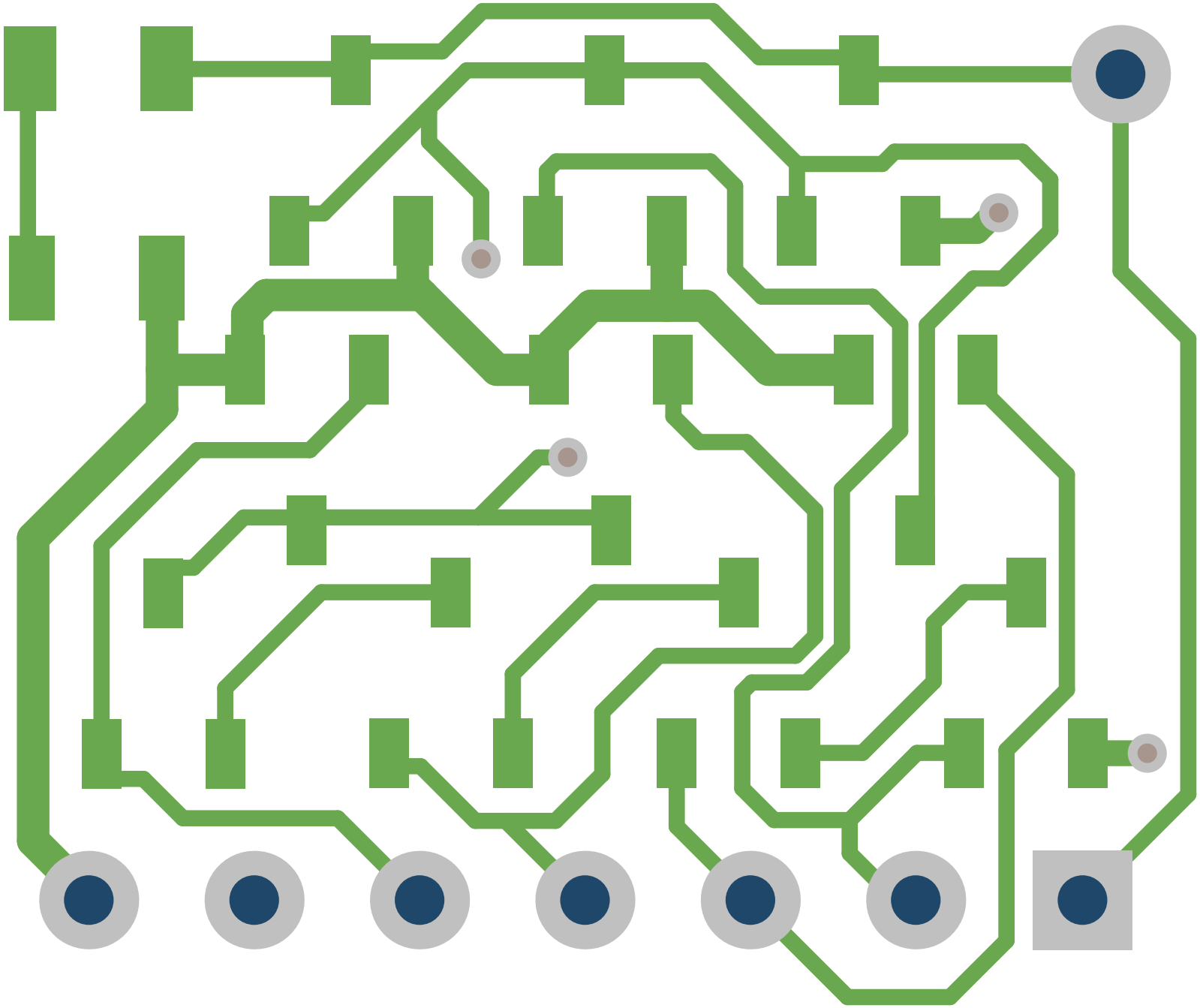

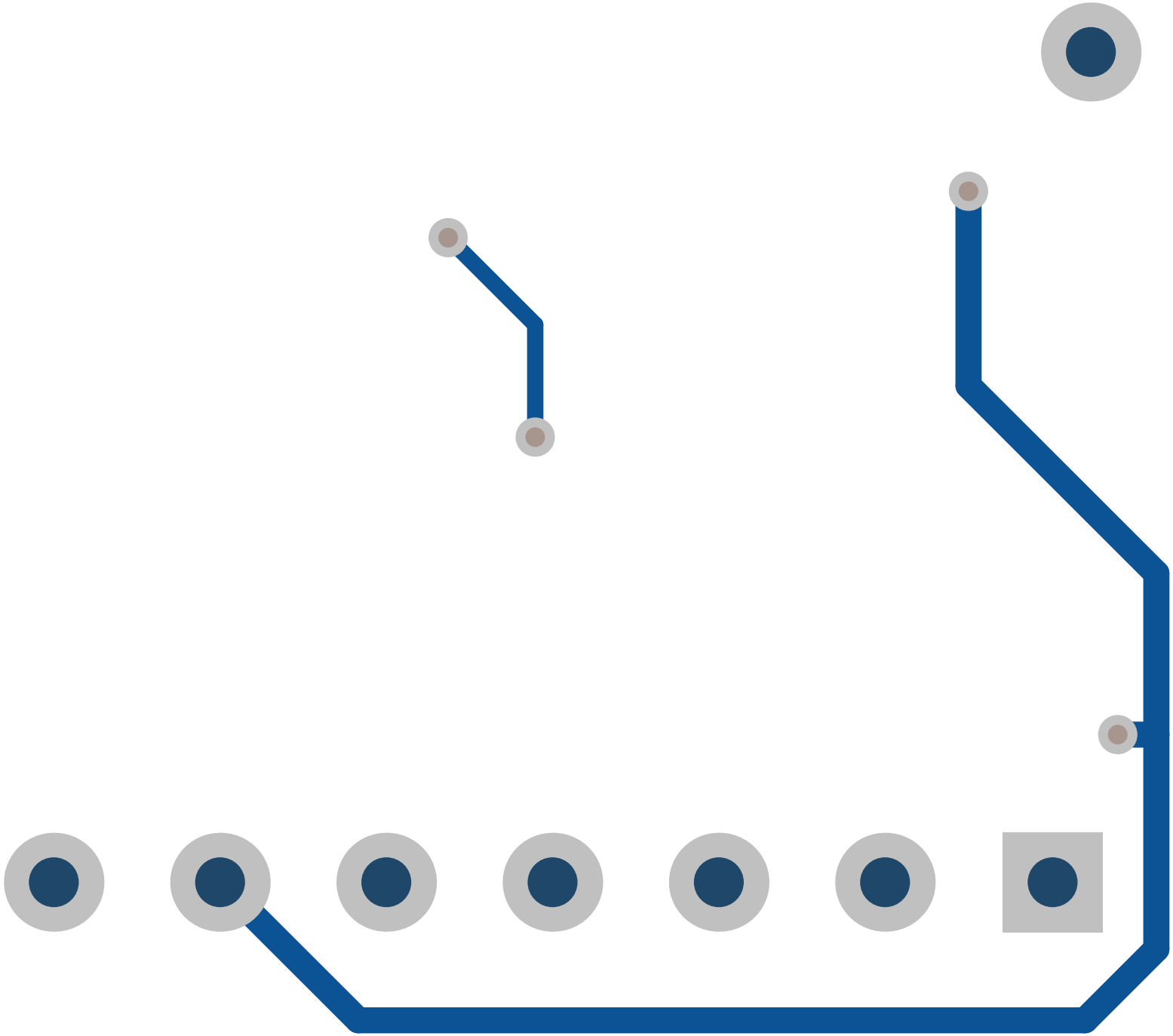

Bill of Materials

CMOS OR4 Gate

Description	Value	Q
Led SMD 0805	Red	1
Resistor SMD 0805	6.8K	1
PMOS Enhanced transistor SOT-23	BSS84	5
NMOS Enhanced transistor SOT-23	2N7002	5

Assembly List

CMOS OR4 Gate

Designator	Description	Value
L1	Led SMD 0805	Red
R1	Resistor SMD 0805	6.8K
T1	PMOS Enhanced transistor SOT-23	BSS84
T2	NMOS Enhanced transistor SOT-23	2N7002
T3	PMOS Enhanced transistor SOT-23	BSS84
T4	NMOS Enhanced transistor SOT-23	2N7002
T5	PMOS Enhanced transistor SOT-23	BSS84
T6	NMOS Enhanced transistor SOT-23	2N7002
T7	PMOS Enhanced transistor SOT-23	BSS84
T8	NMOS Enhanced transistor SOT-23	2N7002
T9	PMOS Enhanced transistor SOT-23	BSS84
T10	NMOS Enhanced transistor SOT-23	2N7002