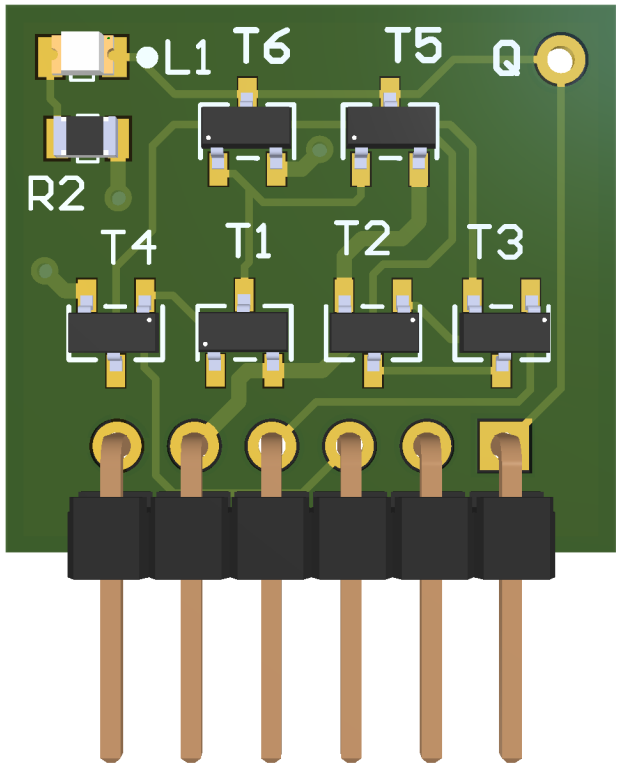
L1
T6
T5
Q
R2
T4
T1
T2
T3

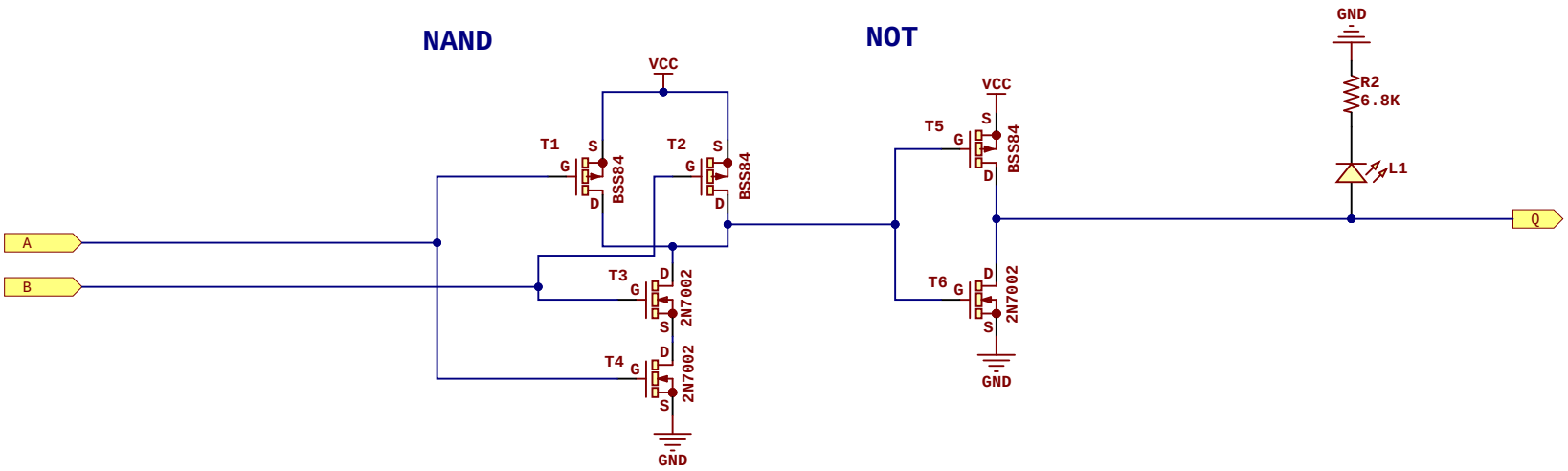

Project: CMOS AND Gate

Revision: 14 **Date:** 24-Mar-26

Author: Rafa Hernández

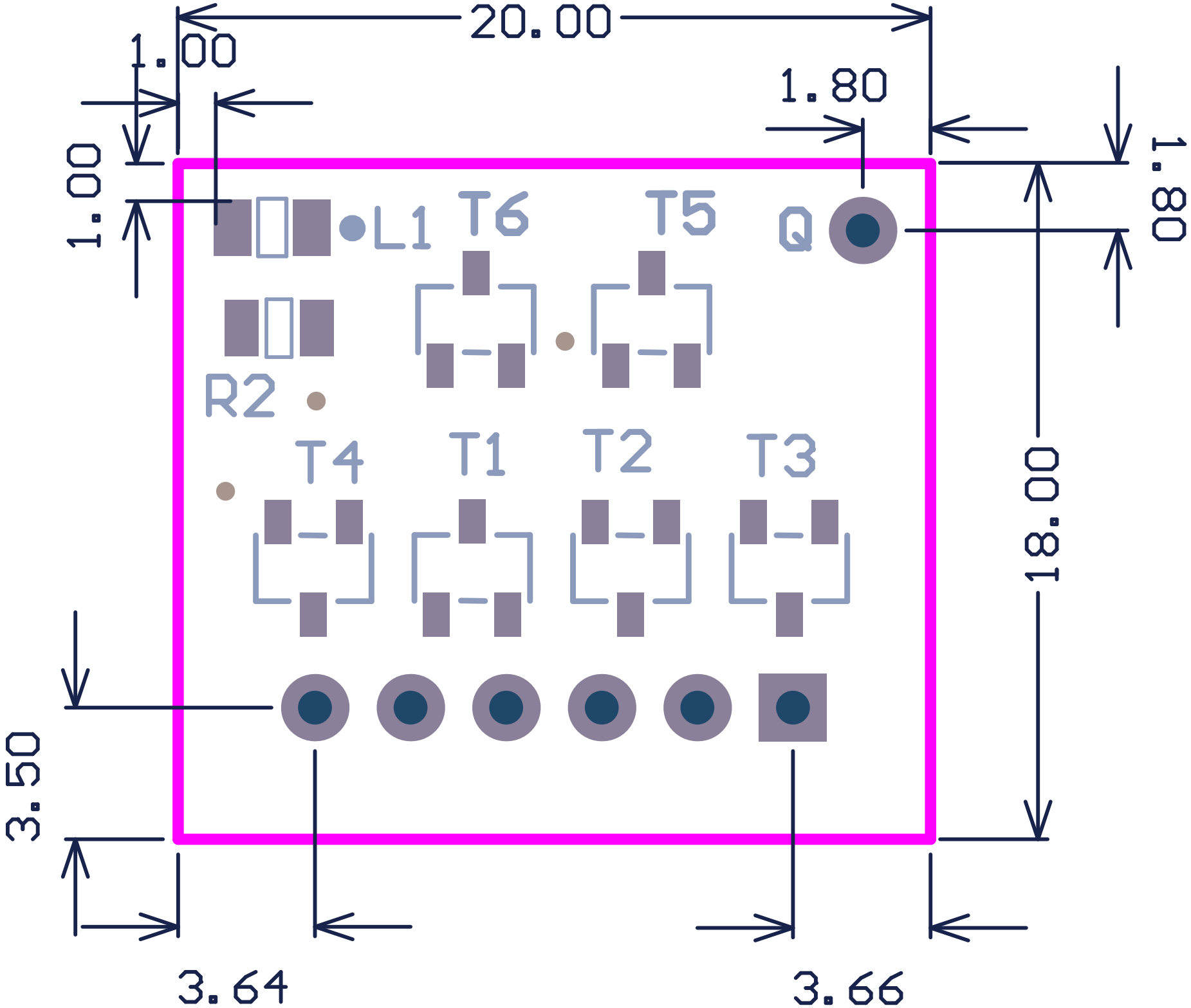
20.00
1.00
1.80
1.00
1.80
L1
T6
T5
Q
R2
T4
T1
T2
T3
18.00
3.50
3.64
3.66

Bill of Materials

CMOS AND Gate

Description	Value	Q
Led SMD 0805	Red	1
Resistor SMD 0805	6.8K	1
PMOS Enhanced transistor SOT-23	BSS84	3
NMOS Enhanced transistor SOT-23	2N7002	3

Assembly List

CMOS AND Gate

Designator	Description	Value
L1	Led SMD 0805	Red
R2	Resistor SMD 0805	6.8K
T1	PMOS Enhanced transistor SOT-23	BSS84
T2	PMOS Enhanced transistor SOT-23	BSS84
T3	NMOS Enhanced transistor SOT-23	2N7002
T4	NMOS Enhanced transistor SOT-23	2N7002
T5	PMOS Enhanced transistor SOT-23	BSS84
T6	NMOS Enhanced transistor SOT-23	2N7002