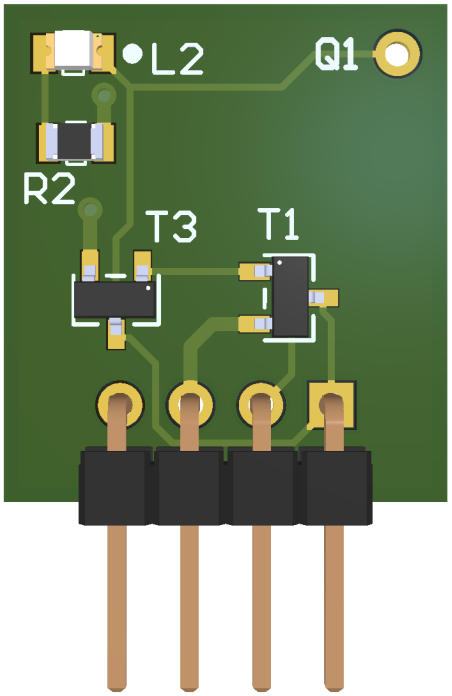
L2
Q1
R2
T3
T1

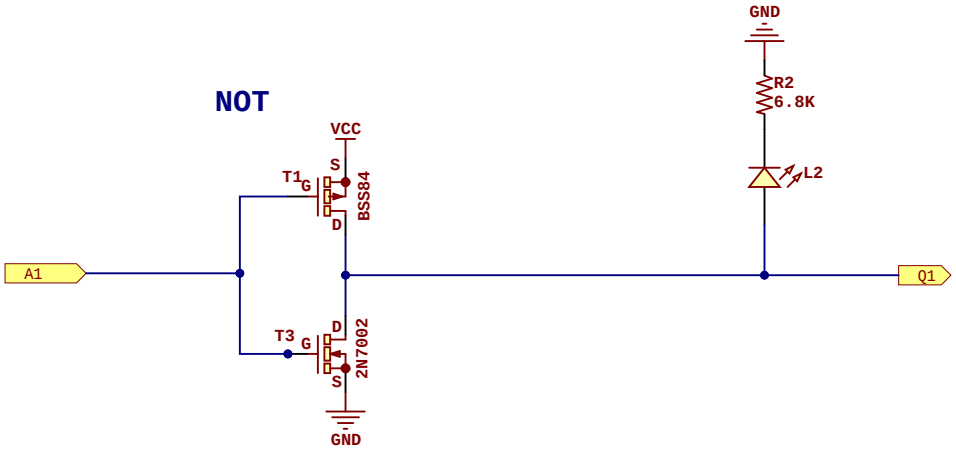

Project: CMOS NOT Gate

Revision: 13

Date: 24-Mar-26

Author: Rafa Hernández

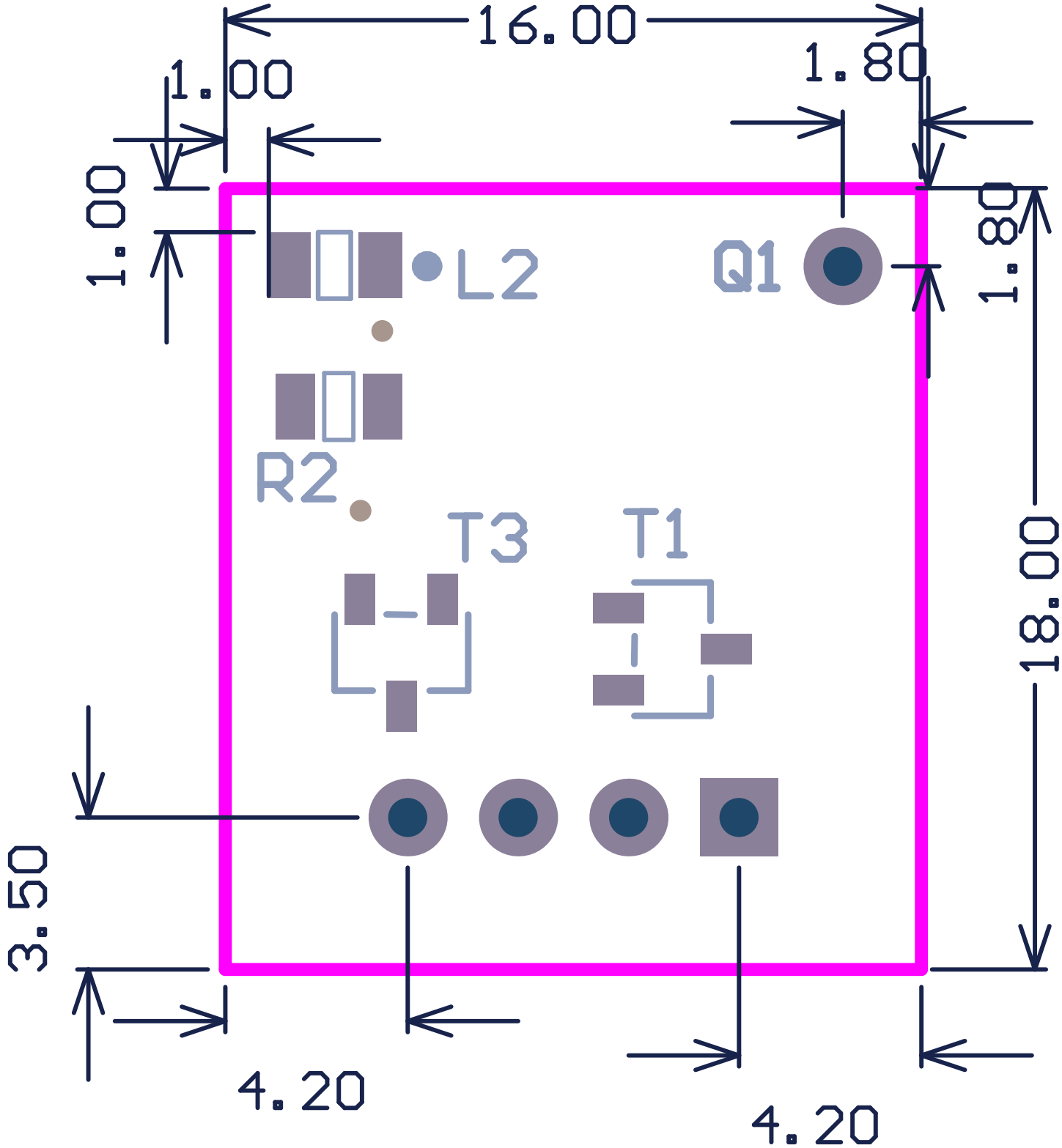
16.00
1.00
1.80
1.00
1.80
L2
Q1
R2
T3
T1
18.00
3.50
4.20
4.20

Bill of Materials

CMOS NOT Gate

Description	Value	Q
Led SMD 0805	Red	1
Resistor SMD 0805	6.8K	1
PMOS Enhanced transistor SOT-23	BSS84	1
NMOS Enhanced transistor SOT-23	2N7002	1

Assembly List

CMOS NOT Gate

Designator	Description	Value
L2	Led SMD 0805	Red
R2	Resistor SMD 0805	6.8K
T1	PMOS Enhanced transistor SOT-23	BSS84
T3	NMOS Enhanced transistor SOT-23	2N7002