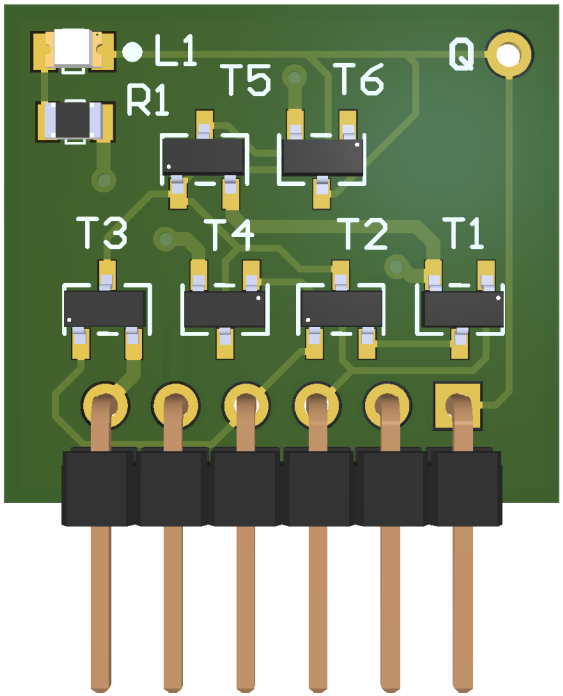
L1
Q
R1
T5
T6
T3
T4
T2
T1

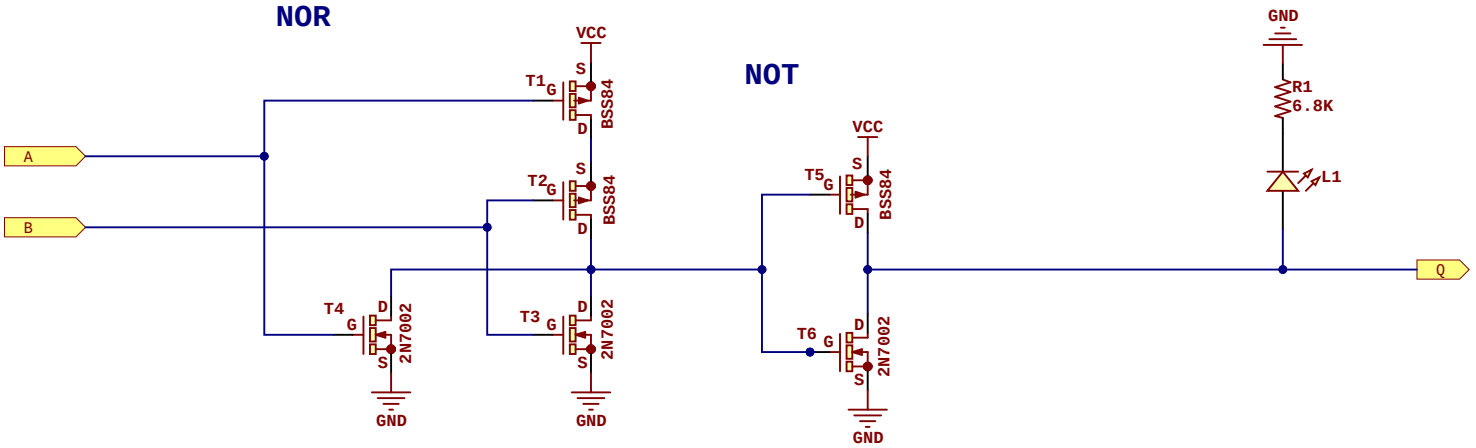

Project: CMOS OR Gate

Revision: 13 **Date:** 24-Mar-26

Author: Rafa Hernández

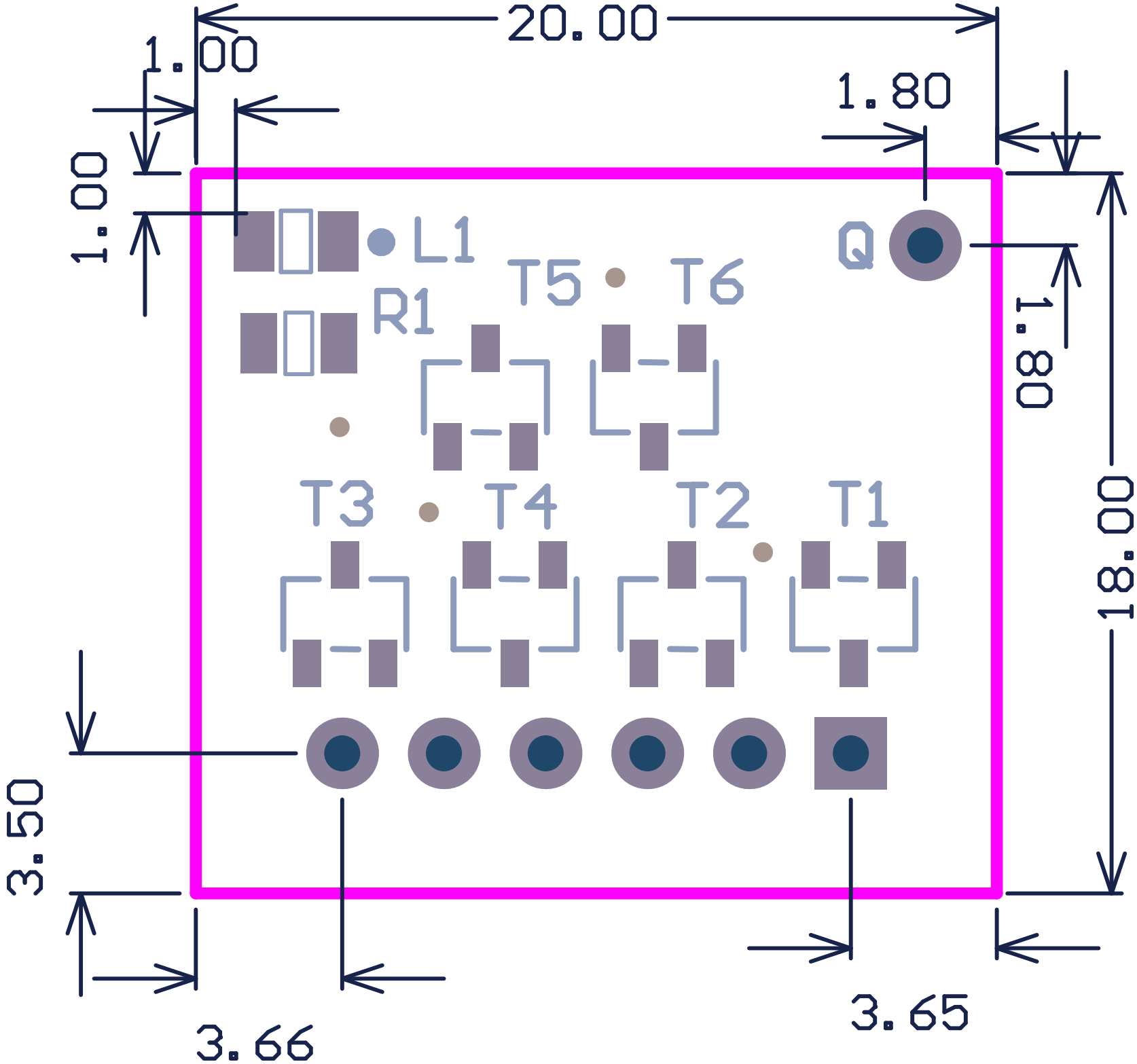
20.00
1.00
1.00
1.80
1.80
18.00
3.50
3.66
3.65
L1
R1
T5
T6
Q
T3
T4
T2
T1

Bill of Materials

CMOS OR Gate

Description	Value	Q
Led SMD 0805	Red	1
Resistor SMD 0805	6.8K	1
PMOS Enhanced transistor SOT-23	BSS84	3
NMOS Enhanced transistor SOT-23	2N7002	3

Assembly List

CMOS OR Gate

Designator	Description	Value
L1	Led SMD 0805	Red
R1	Resistor SMD 0805	6.8K
T1	PMOS Enhanced transistor SOT-23	BSS84
T2	PMOS Enhanced transistor SOT-23	BSS84
T3	NMOS Enhanced transistor SOT-23	2N7002
T4	NMOS Enhanced transistor SOT-23	2N7002
T5	PMOS Enhanced transistor SOT-23	BSS84
T6	NMOS Enhanced transistor SOT-23	2N7002