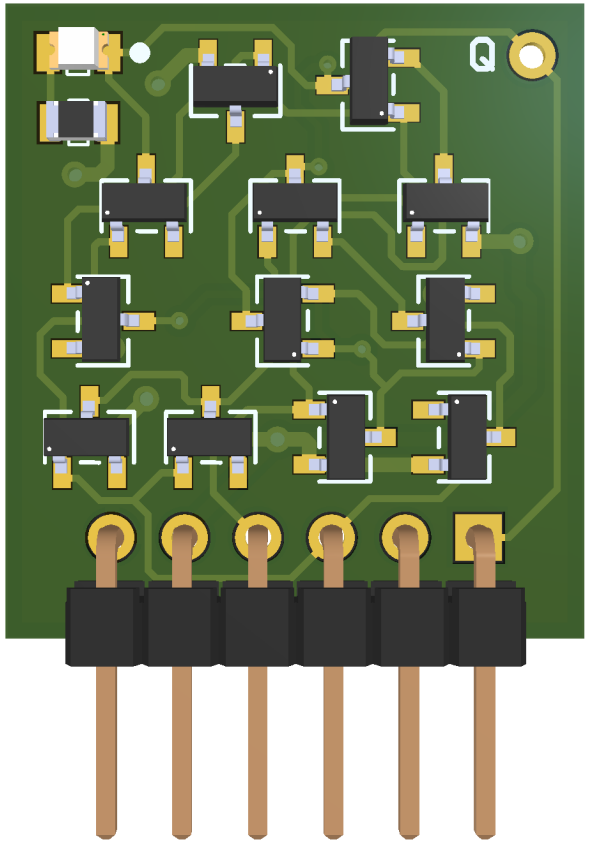
Q

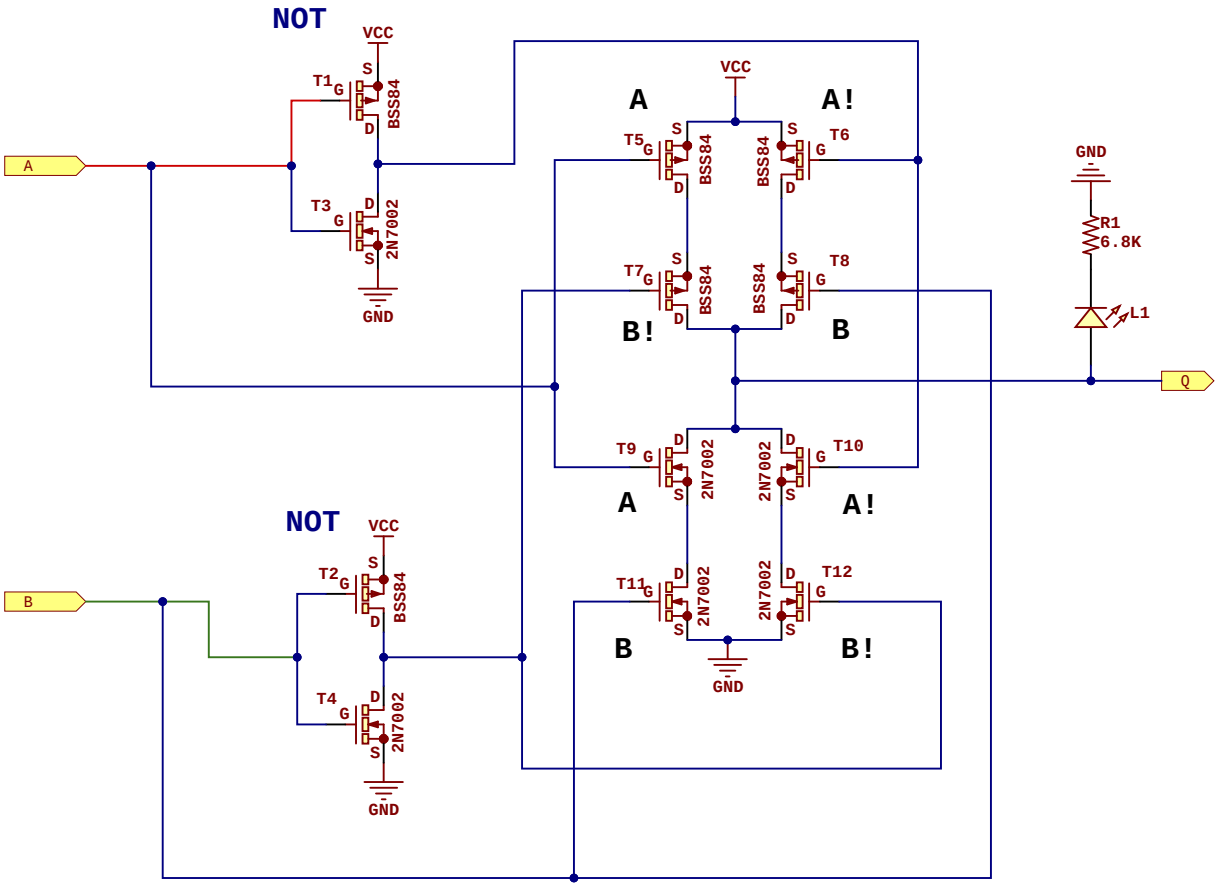

Project: CMOS XOR Gate

Revision: 15 **Date:** 24-Mar-26

Author: Rafa Hernández

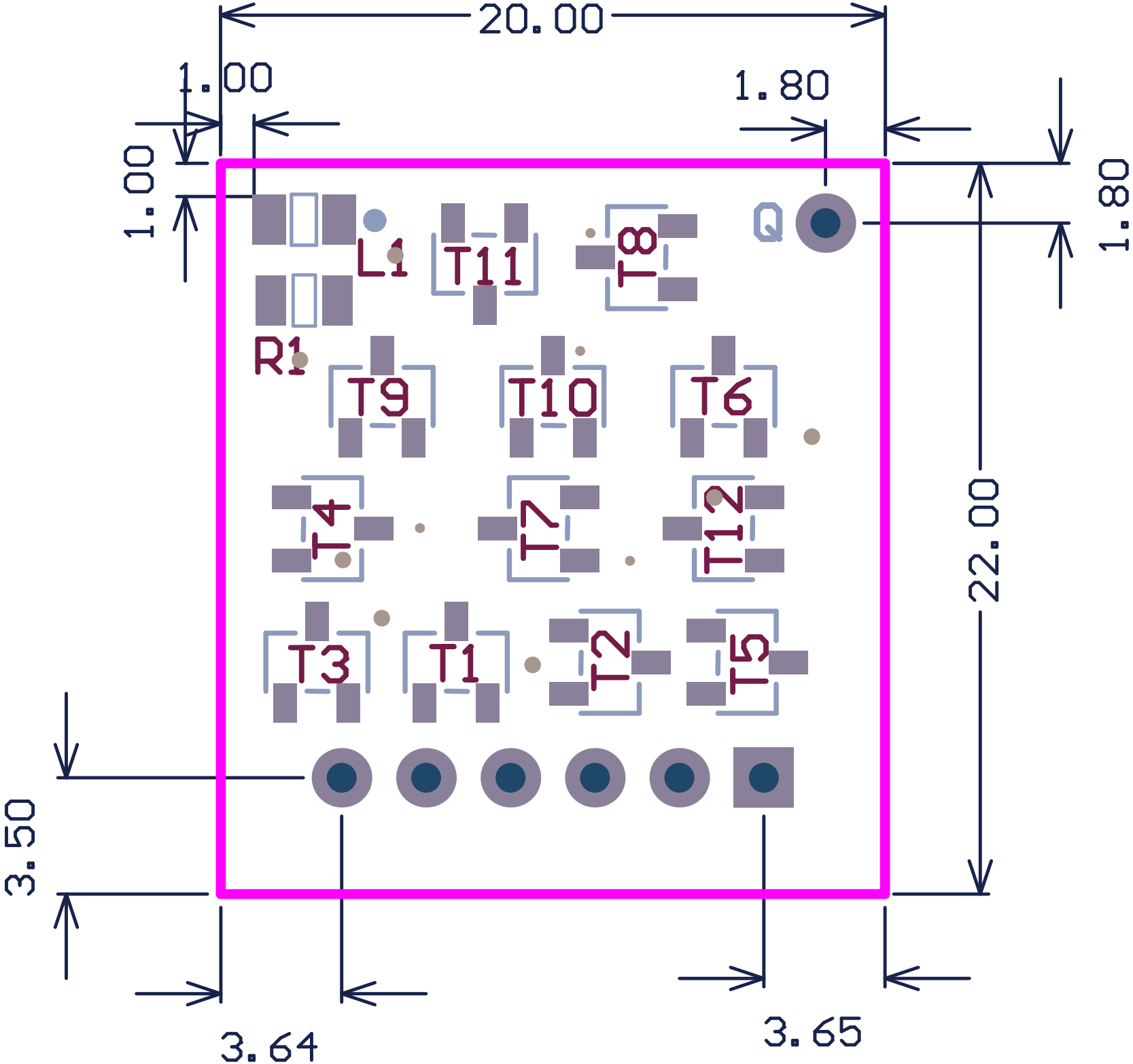
20.00
1.00
1.80
1.00
1.80
L1
T11
T8
Q
R1
T9
T10
T6
T4
T7
T12
T3
T1
T2
T5
22.00
3.50
3.64
3.65

Bill of Materials

CMOS XOR Gate

Description	Value	Q
Led SMD 0805	Red	1
Resistor SMD 0805	6.8K	1
PMOS Enhanced transistor SOT-23	BSS84	6
NMOS Enhanced transistor SOT-23	2N7002	6

Assembly List

CMOS XOR Gate

Designator	Description	Value
L1	Led SMD 0805	Red
R1	Resistor SMD 0805	6.8K
T1	PMOS Enhanced transistor SOT-23	BSS84
T2	PMOS Enhanced transistor SOT-23	BSS84
T3	NMOS Enhanced transistor SOT-23	2N7002
T4	NMOS Enhanced transistor SOT-23	2N7002
T5	PMOS Enhanced transistor SOT-23	BSS84
T6	PMOS Enhanced transistor SOT-23	BSS84
T7	PMOS Enhanced transistor SOT-23	BSS84
T8	PMOS Enhanced transistor SOT-23	BSS84
T9	NMOS Enhanced transistor SOT-23	2N7002
T10	NMOS Enhanced transistor SOT-23	2N7002
T11	NMOS Enhanced transistor SOT-23	2N7002
T12	NMOS Enhanced transistor SOT-23	2N7002