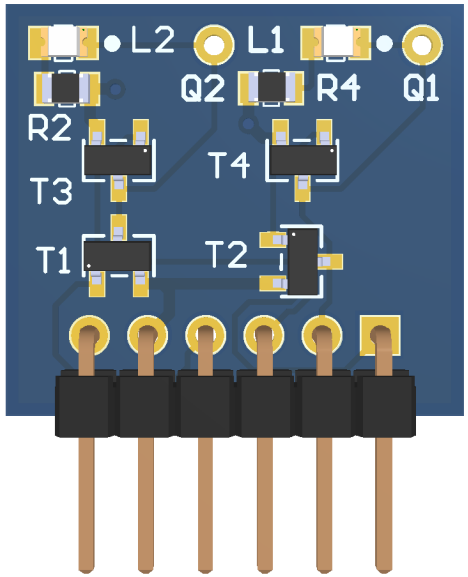
L2
L1
Q2
R4
Q1
R2
T4
T3
T1
T2

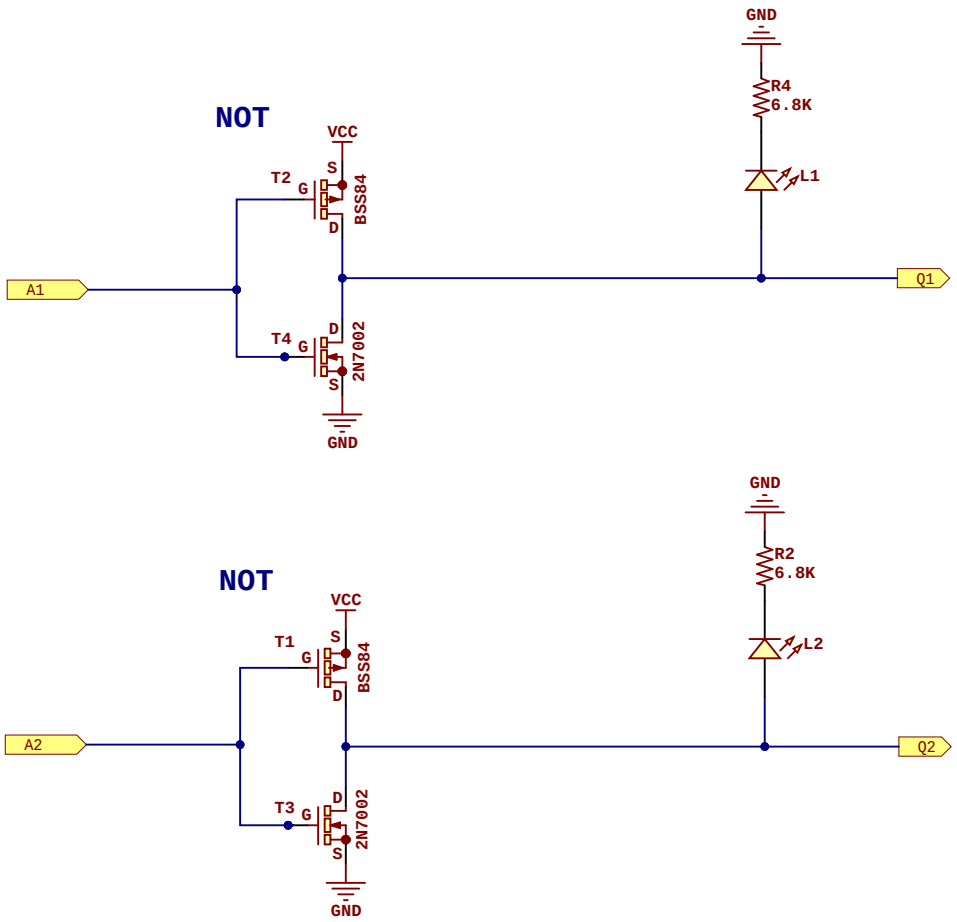

Project: CMOS DUAL NOT Gates

Revision: 14 **Date:** 03-Dec-25

Author: Rafa Hernández

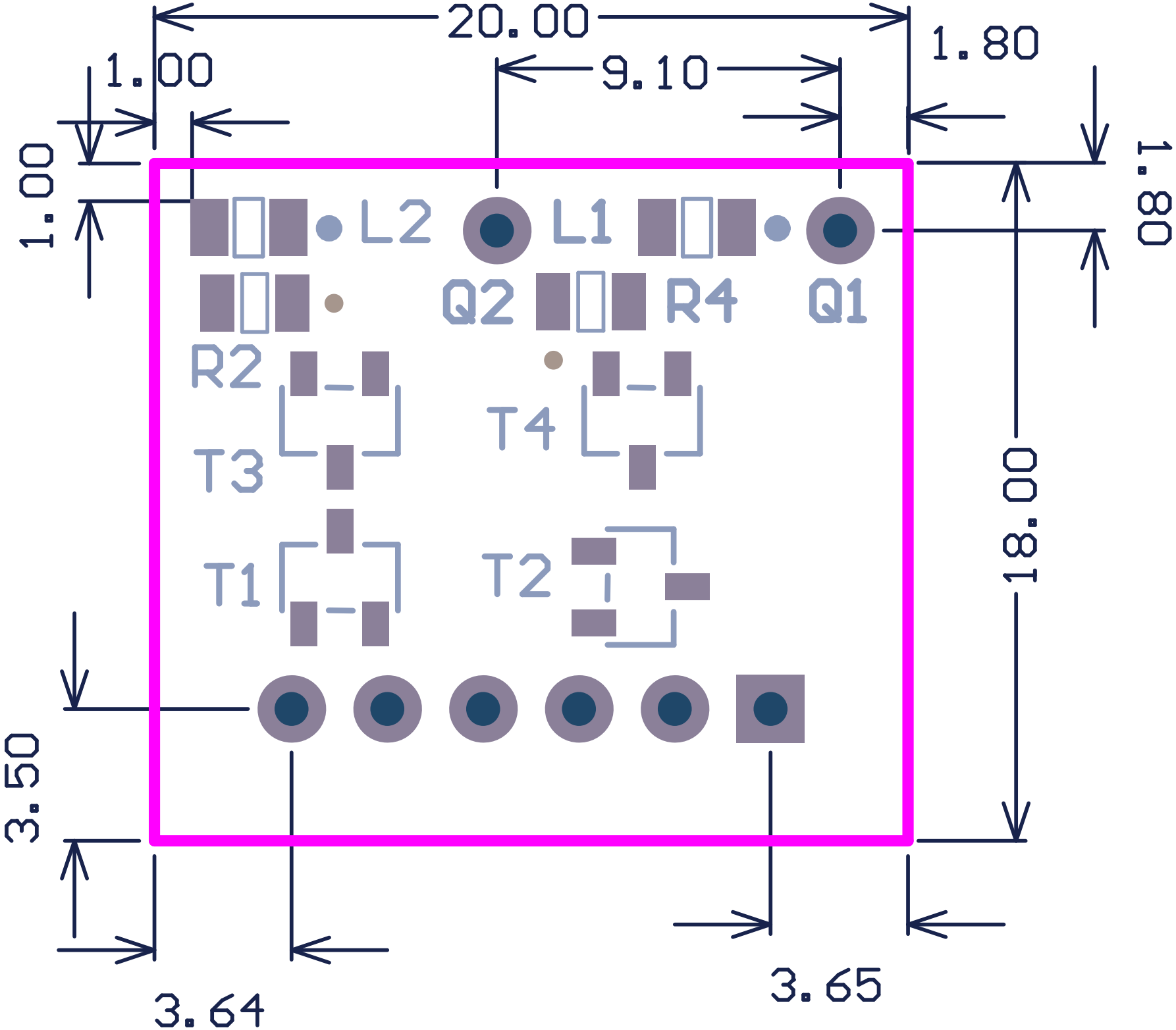
20.00
1.00
9.10
1.80
1.00
1.80
L2
L1
Q2
R4
Q1
R2
T4
T3
T1
T2
18.00
3.50
3.64
3.65

Bill of Materials

CMOS Dual NOT Gate

Description	Value	Q
Led SMD 0805	Red	2
Resistor SMD 0805	6.8K	2
PMOS Enhanced transistor SOT-23	BSS84	2
NMOS Enhanced transistor SOT-23	2N7002	2

Assembly List

CMOS Dual NOT Gate

Designator	Description	Value
L1	Led SMD 0805	Red
L2	Led SMD 0805	Red
R2	Resistor SMD 0805	6.8K
R4	Resistor SMD 0805	6.8K
T1	PMOS Enhanced transistor SOT-23	BSS84
T2	PMOS Enhanced transistor SOT-23	BSS84
T3	NMOS Enhanced transistor SOT-23	2N7002
T4	NMOS Enhanced transistor SOT-23	2N7002