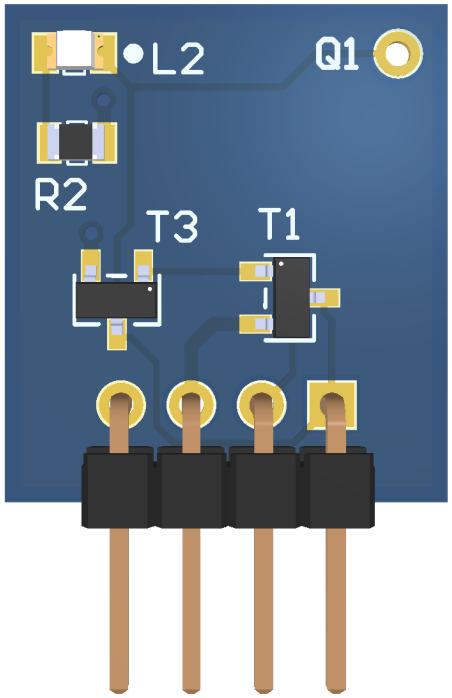
L2
Q1
R2
T3
T1

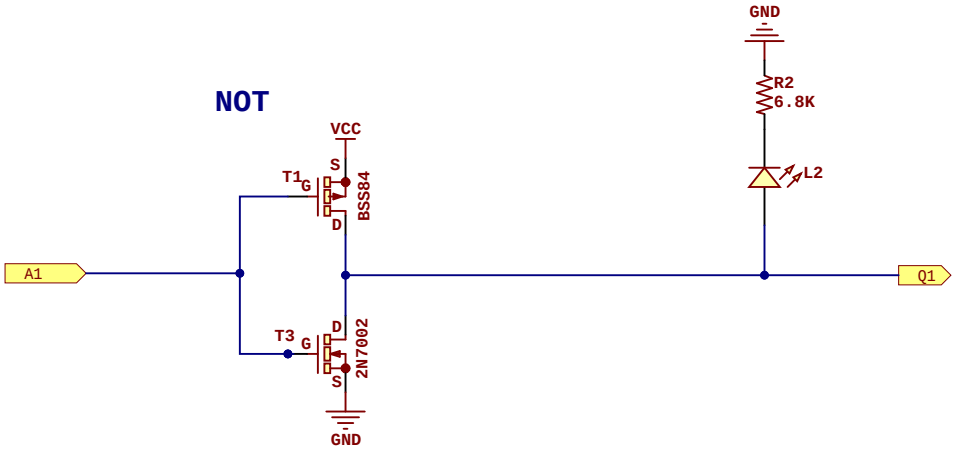


**Project:** CMOS NOT Gate

**Revision:** 12 **Date:** 03-Dec-25

**Author:** Rafa Hernández

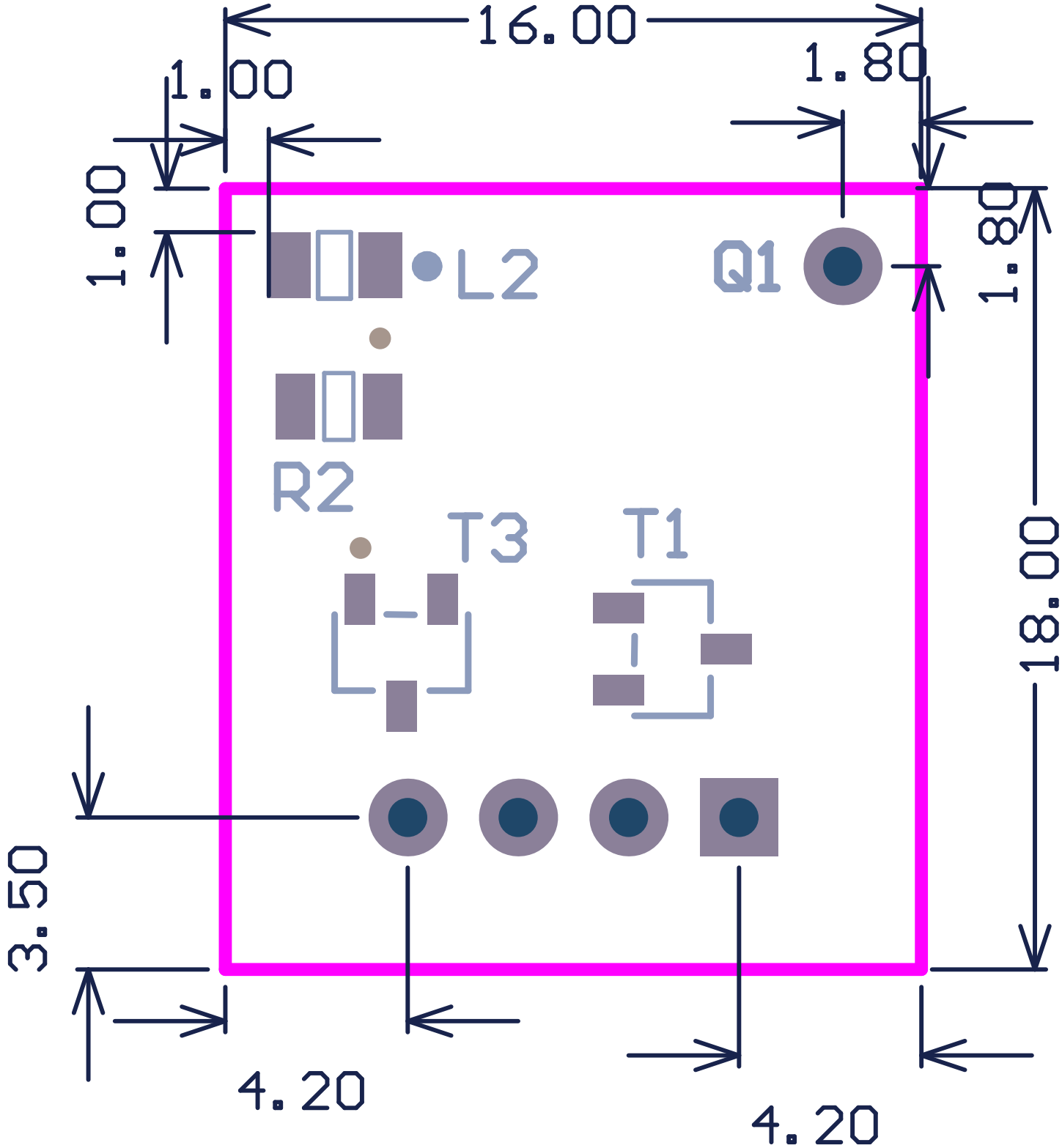
16.00
1.00
1.80
1.00
1.80
L2
Q1
R2
T3
T1
18.00
3.50
4.20
4.20

# Bill of Materials

## CMOS NOT Gate

| Description | Value | Q |
|---|---|---|
| Led SMD 0805 | Red | 1 |
| Resistor SMD 0805 | 6.8K | 1 |
| PMOS Enhanced transistor SOT-23 | BSS84 | 1 |
| NMOS Enhanced transistor SOT-23 | 2N7002 | 1 |

# Assembly List

## CMOS NOT Gate

| Designator | Description | Value |
|---|---|---|
| L2 | Led SMD 0805 | Red |
| R2 | Resistor SMD 0805 | 6.8K |
| T1 | PMOS Enhanced transistor SOT-23 | BSS84 |
| T3 | NMOS Enhanced transistor SOT-23 | 2N7002 |