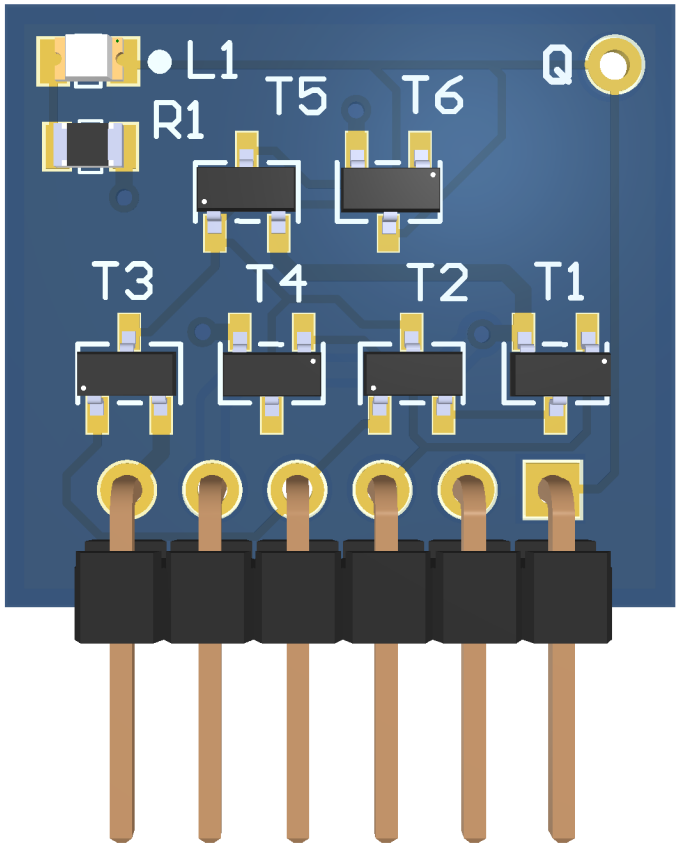
L1
Q
R1
T5
T6
T3
T4
T2
T1

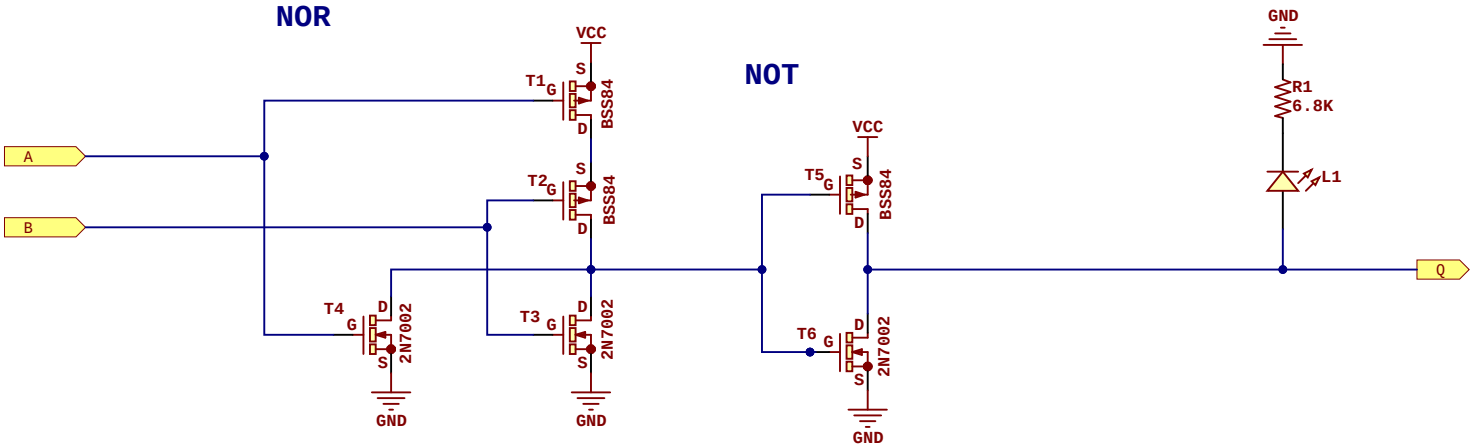


**Project:** CMOS OR Gate

**Revision:** 12 **Date:** 03-Dec-25

**Author:** Rafa Hernández

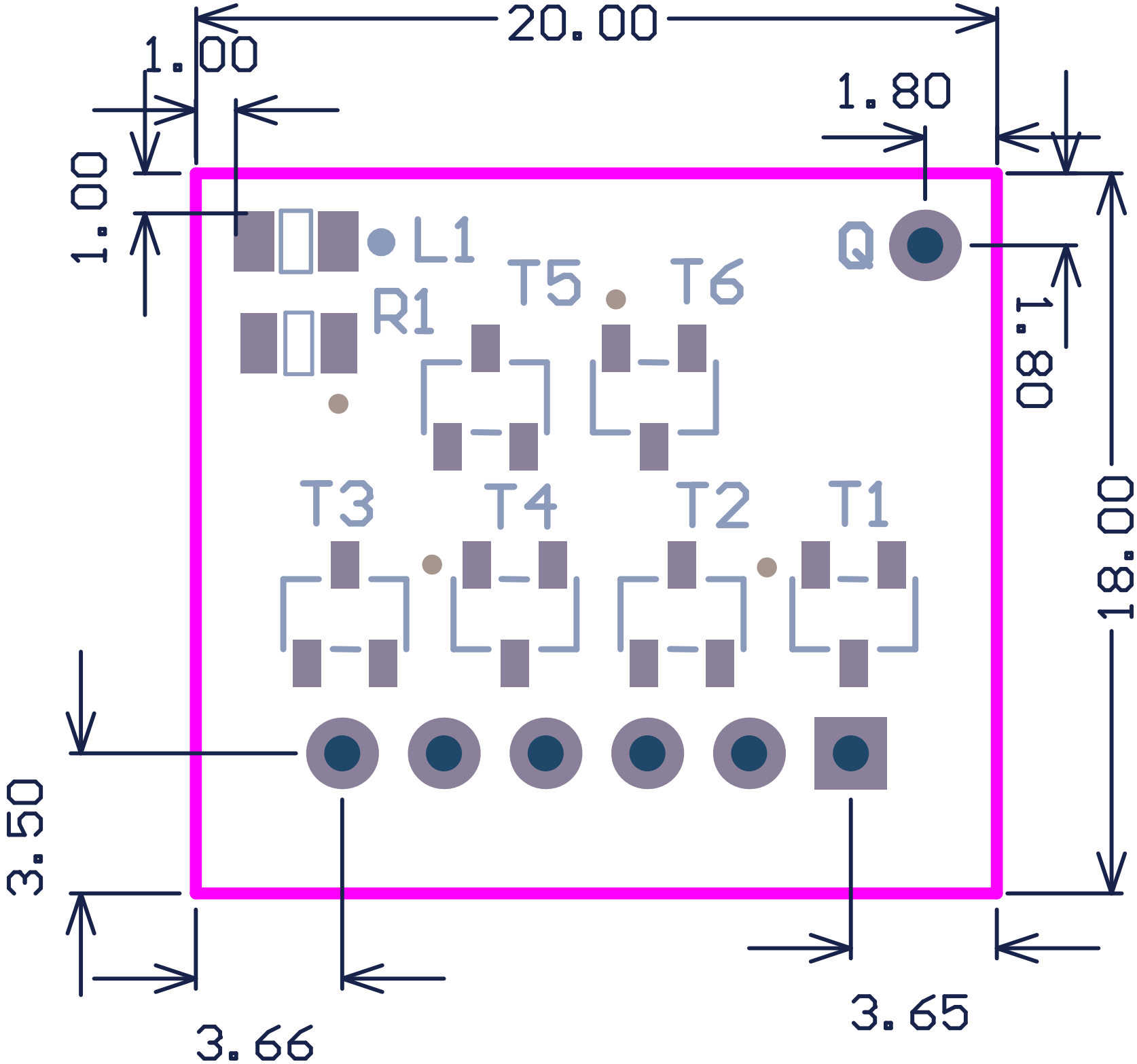
20.00
1.00
1.80
1.00
L1
R1
T5
T6
Q
1.80
18.00
T3
T4
T2
T1
3.50
3.66
3.65

# Bill of Materials

## CMOS OR Gate

| Description | Value | Q |
|---|---|---|
| Led SMD 0805 | Red | 1 |
| Resistor SMD 0805 | 6.8K | 1 |
| PMOS Enhanced transistor SOT-23 | BSS84 | 3 |
| NMOS Enhanced transistor SOT-23 | 2N7002 | 3 |

# Assembly List

## CMOS OR Gate

| Designator | Description | Value |
|---|---|---|
| L1 | Led SMD 0805 | Red |
| R1 | Resistor SMD 0805 | 6.8K |
| T1 | PMOS Enhanced transistor SOT-23 | BSS84 |
| T2 | PMOS Enhanced transistor SOT-23 | BSS84 |
| T3 | NMOS Enhanced transistor SOT-23 | 2N7002 |
| T4 | NMOS Enhanced transistor SOT-23 | 2N7002 |
| T5 | PMOS Enhanced transistor SOT-23 | BSS84 |
| T6 | NMOS Enhanced transistor SOT-23 | 2N7002 |