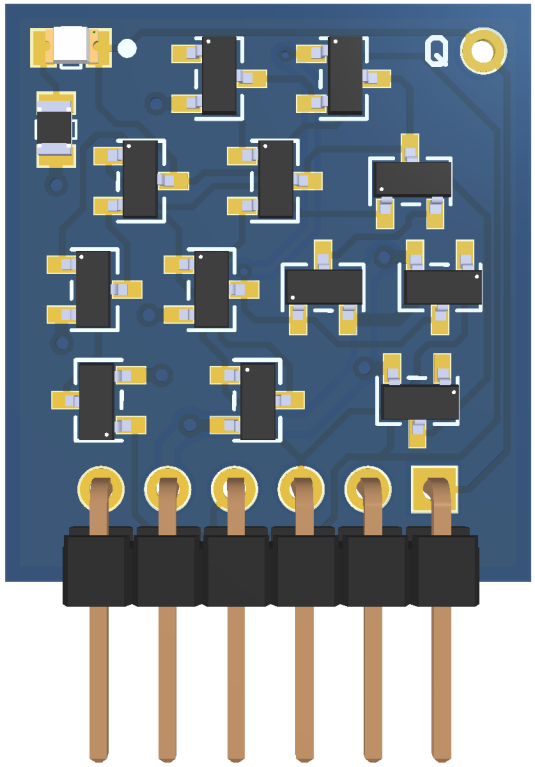
Q

Text

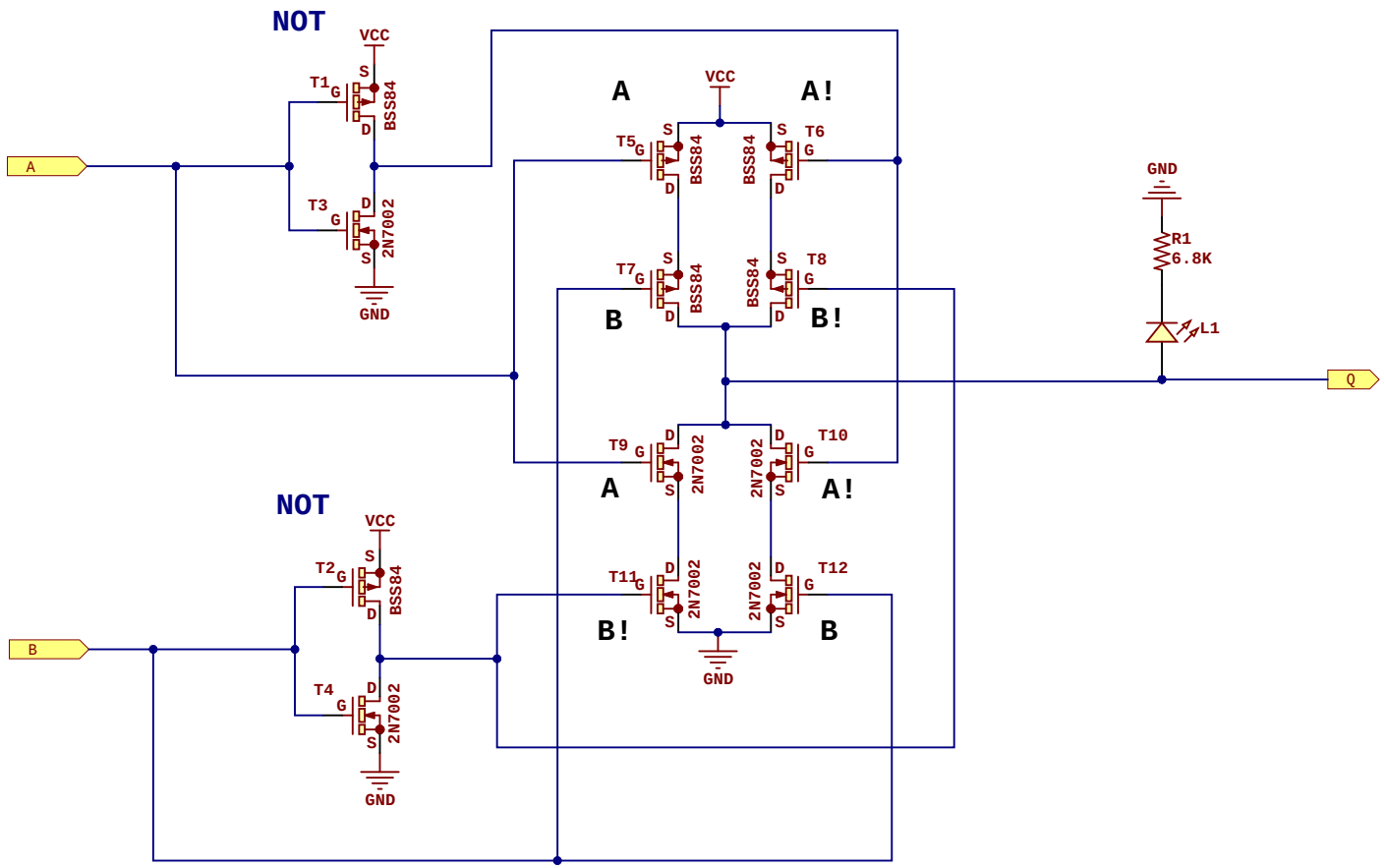

Project: CMOS XNOR Gate

Revision: 11 **Date:** 24-Nov-25

Author: Rafa Hernández

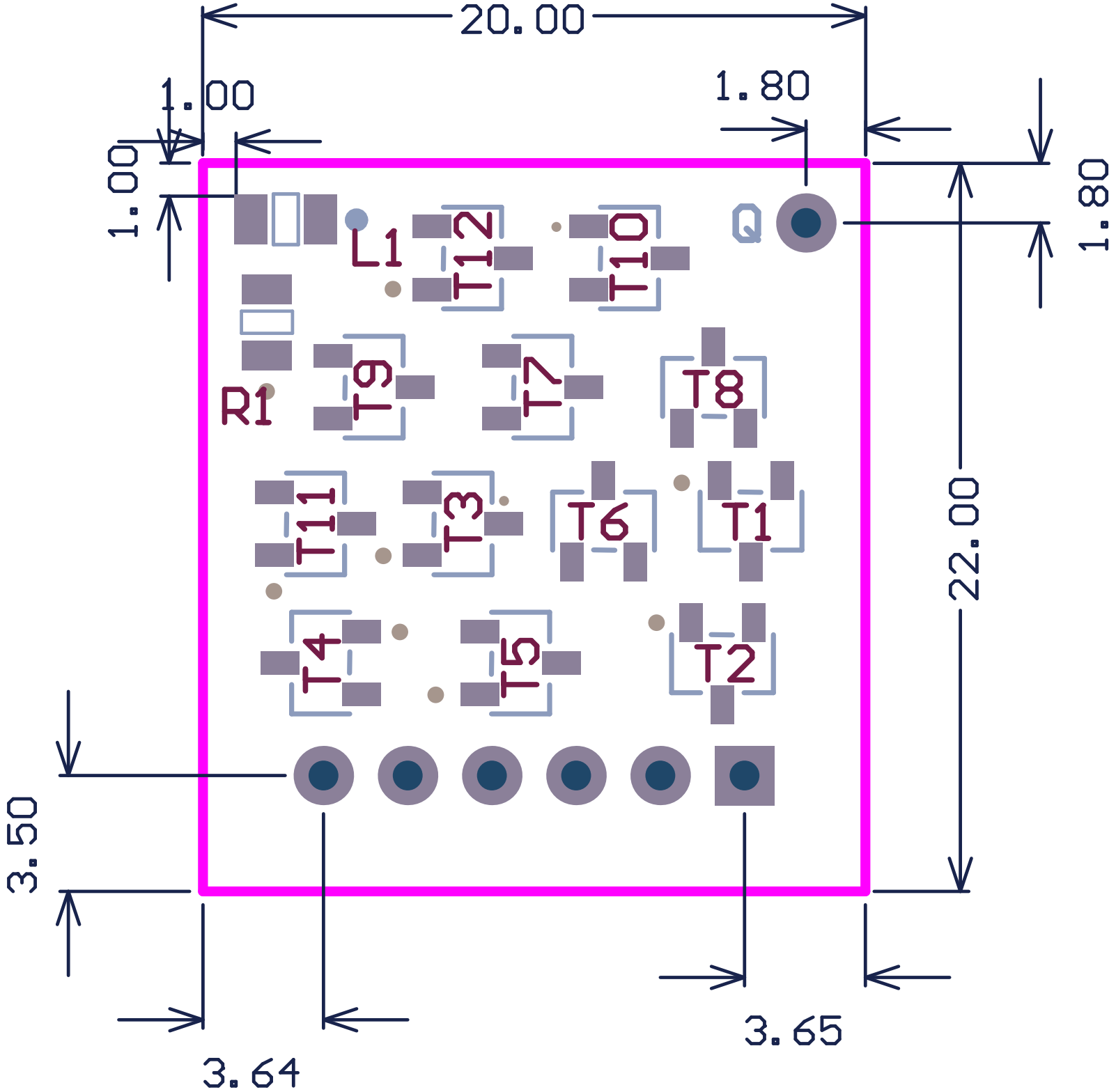
20.00
1.00
1.00
1.80
1.80
22.00
3.50
3.64
3.65
L1
R1
Q
T12
T10
T9
T7
T8
T11
T3
T6
T1
T4
T5
T2

Bill of Materials

CMOS XNOR Gate

Description	Value	Q
Led SMD 0805	Red	1
Resistor SMD 0805	6.8K	1
PMOS Enhanced transistor SOT-23	BSS84	6
NMOS Enhanced transistor SOT-23	2N7002	6

Assembly List

CMOS XNOR Gate

Designator	Description	Value
L1	Led SMD 0805	Red
R1	Resistor SMD 0805	6.8K
T1	PMOS Enhanced transistor SOT-23	BSS84
T2	PMOS Enhanced transistor SOT-23	BSS84
T3	NMOS Enhanced transistor SOT-23	2N7002
T4	NMOS Enhanced transistor SOT-23	2N7002
T5	PMOS Enhanced transistor SOT-23	BSS84
T6	PMOS Enhanced transistor SOT-23	BSS84
T7	PMOS Enhanced transistor SOT-23	BSS84
T8	PMOS Enhanced transistor SOT-23	BSS84
T9	NMOS Enhanced transistor SOT-23	2N7002
T10	NMOS Enhanced transistor SOT-23	2N7002
T11	NMOS Enhanced transistor SOT-23	2N7002
T12	NMOS Enhanced transistor SOT-23	2N7002