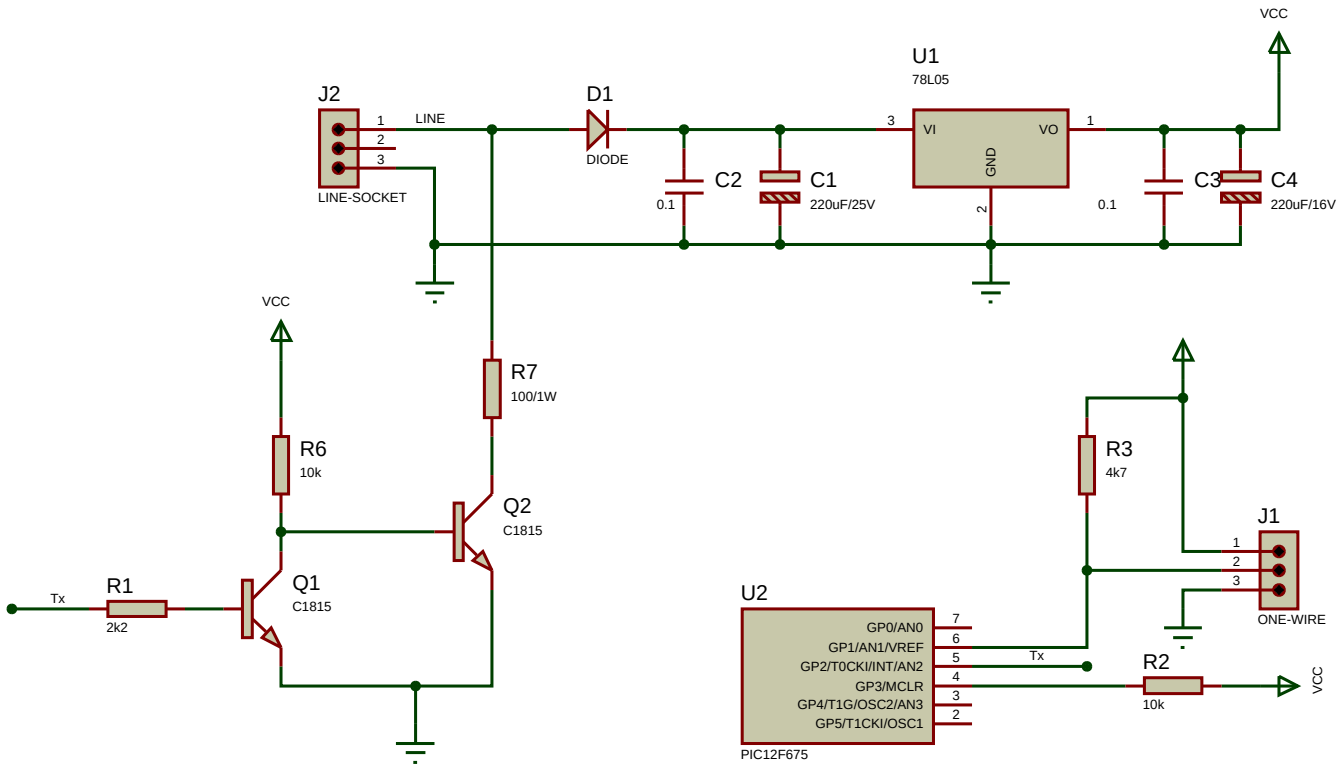

VIETSOVPETRO
LOGGING & TESTING DIVISION

PTR-SURFACE

RESEARCH AND DEVELOPMENT TEAM
LOGGING & TESTING DIVISION
VIETSOVPETRO

FILE NAME:	PTR_TOOL.pdsprj
DESIGN TITLE:	PTR SURFACE
PATH:	D:\Eelearning\projects\Maynhietdo\PTR_TOOL.pdsprj
BY: CNTT	REV: SUSU
DATE:	8/5/2015
PAGE:	1 of 1
TIME:	2:26:00 PM