PASTERNACK®
THE ENGINEER'S RF SOURCE

N Female Bulkhead to UMCX 2.1 Plug Cable 12 Inch Length Using 0.81mm Coax, RoHS

TECHNICAL DATA SHEET PE3CA1013-12

Pasternack's UMCX 2.1 series ultra-miniature coaxial cable assemblies (also called 2.1mm UMCX) have a mated connection height of only 2.1mm. They are constructed using a flexible micro-coax cable and are compatible with ultra-miniature products from companies such as Hirose, IPEX, and other UMCX connector and cable manufactures. Our UMCX 2.1 plug connectors are comparable in design to the Hirose U.FL series of connectors and the IPEX MHF series connectors. Pasternack also provides three additional connector options for our between-series 0.81mm micro-coax jumper cables including UMCX 2.5, WMCX 1.6 and HMCX32 1.2 low profile connectors with differing form factors and mated heights.

Our UMCX 2.1 between series cables can be ordered with Female Bulkhead versions of SMA, Reverse Polarity SMA and Type N connectors as well as an SMA Male option. These cables provide a convenient connector interface for applications that require and RF signal to be routed to an external RF component such as an antenna or to provide a test point for the RF printed circuit board. These U.FL and MHF compatible UMCX 2.1 cable assemblies are available from stock in standard lengths, and custom lengths are available upon request. Standard length UMCX 2.1 cables ship the same day they are ordered.

Features

- 1.2mm, 1.6mm, 2.1mm and 2.5mm mated assembly height's
- Operate from DC to 3GHz
- 100% RF and Continuity tested
- Compatible with Hirose U.FL and IPEX MHF products
- Small foot print with easy snap on/off mating

Applications

- Wireless LAN, Mini PCI
- Mobile Antenna/GPS/Radio Systems
- PDA/PCS/Cellular Handset applications
- Wireless Communications systems (LAN,GSM,PCS, WCDMA, UMTS)

Configuration

Connector 1	N Female Bulkhead
Connector 2	UMCX 2.1 Plug
Cable Type	0.81mm

Electrical Specifications

Frequency Range	DC to 3 GHz
Impedance	50 Ohms
Max VSWR	1.35:1

Performance by Frequency

Frequency 1

Frequency	250 MHz
VSWR	1.35:1
Return Loss	16.54 dB
Insertion Loss	0.55 dB

Frequency 2

Frequency	500 MHz
VSWR	1.35:1
Return Loss	16.54 dB
Insertion Loss	0.78 dB

Click the following link (or enter part number in "SEARCH" on website) to obtain additional part information including price, inventory and certifications: N Female Bulkhead to UMCX 2.1 Plug Cable 12 Inch Length Using 0.81mm Coax, RoHS PE3CA1013-12

Pasternack Enterprises, Inc. • P.O. Box 16759, Irvine, CA 92623
Phone: (866) 727-8376 or (949) 261-1920 • **Fax:** (949) 261-7451
Sales@Pasternack.com • Techsupport@Pasternack.com

ISO 9001 : 2008 Registered

© 2015 Pasternack Enterprises All Rights Reserved

N Female Bulkhead to UMCX 2.1 Plug Cable 12 Inch Length Using 0.81mm Coax, RoHS

Frequency 3

Frequency	1000 MHz
VSWR	1.35:1
Return Loss	16.54 dB
Insertion Loss	1.25 dB

Frequency 4

Frequency	2.5 GHz
VSWR	1.35:1
Return Loss	16.54 dB
Insertion Loss	1.9 dB

Frequency 5

Frequency	3 GHz
VSWR	1.35:1
Return Loss	16.54 dB
Insertion Loss	2.07 dB

Mechanical Specifications

Temperature

Temperature Operating Range	-55 to +125 deg C

Size

Length	12 in [304.8 mm]

Cable

Cable Type	0.81mm
Inner Conductor Type	Stranded
Cable Inner Conductor	Copper, Silver
No of Shields	1
Cable Outer Conductor 1	Tinned Copper
Dielectric Type	FEP
Jacket Material	FEP
Jacket Diameter	0.032 in [0.81 mm]

Connector 1

Type	N Female Bulkhead
Configuration	Straight
Mount Method	Bulkhead
Inner Conductor Material and Plating	Phosphor Bronze, Gold
Body Material and Plating	Brass, Nickel

Connector 2

Type	UMCX 2.1 Plug
Configuration	Straight

Click the following link (or enter part number in "SEARCH" on website) to obtain additional part information including price, inventory and certifications: N Female Bulkhead to UMCX 2.1 Plug Cable 12 Inch Length Using 0.81mm Coax, RoHS PE3CA1013-12

Pasternack Enterprises, Inc. • P.O. Box 16759, Irvine, CA 92623
Phone: (866) 727-8376 or (949) 261-1920 • **Fax:** (949) 261-7451
Sales@Pasternack.com • Techsupport@Pasternack.com

ISO 9001 : 2008 Registered

© 2015 Pasternack Enterprises All Rights Reserved

N Female Bulkhead to UMCX 2.1 Plug Cable 12 Inch Length Using 0.81mm Coax, RoHS

TECHNICAL DATA SHEET PE3CA1013-12

Compliance Certifications (visit www.Pasternack.com for current document)

RoHS Compliant	Yes
REACH Compliant	12/19/2011

Plotted and Other Data

Notes:

- Values at +25 °C, sea level

How to Order

Part Number Configuration: **PE3CA1013 - xx uu**

- uu: Unit of Measure: cm = Centimeters; <blank> = Inches
- xx: Length
- PE3CA1013: Base Number

Example: PE3CA1013-12 = 12 inches long cable
PE3CA1013-100cm = 100 cm long cable

N Female Bulkhead to UMCX 2.1 Plug Cable 12 Inch Length Using 0.81mm Coax, RoHS from Pasternack Enterprises has same day shipment for domestic and International orders. Our RF, microwave and millimeter wave products maintain a 99% availability and are part of the broadest selection in the industry.

Click the following link (or enter part number in “SEARCH” on website) to obtain additional part information including price, inventory and certifications: N Female Bulkhead to UMCX 2.1 Plug Cable 12 Inch Length Using 0.81mm Coax, RoHS PE3CA1013-12

URL: http://www.pasternack.com/n-female-umcx-2.1-plug-0.81mm-cable-assembly-pe3ca1013-12-p.aspx

The information contained in this document is accurate to the best of our knowledge and representative of the part described herein. It may be necessary to make modifications to the part and/or the documentation of the part, in order to implement improvements. Pasternack reserves the right to make such changes as required. Unless otherwise stated, all specifications are nominal. Pasternack does not make any representation or warranty regarding the suitability of the part described herein for any particular purpose, and Pasternack does not assume any liability arising out of the use of any part or documentation.

Pasternack Enterprises, Inc. • P.O. Box 16759, Irvine, CA 92623
Phone: (866) 727-8376 or (949) 261-1920 • **Fax:** (949) 261-7451
Sales@Pasternack.com • Techsupport@Pasternack.com

ISO 9001 : 2008 Registered

© 2015 Pasternack Enterprises All Rights Reserved

PE3CA1013-12 CAD Drawing

N Female Bulkhead to UMCX 2.1 Plug Cable 12 Inch Length Using 0.81mm Coax, RoHS

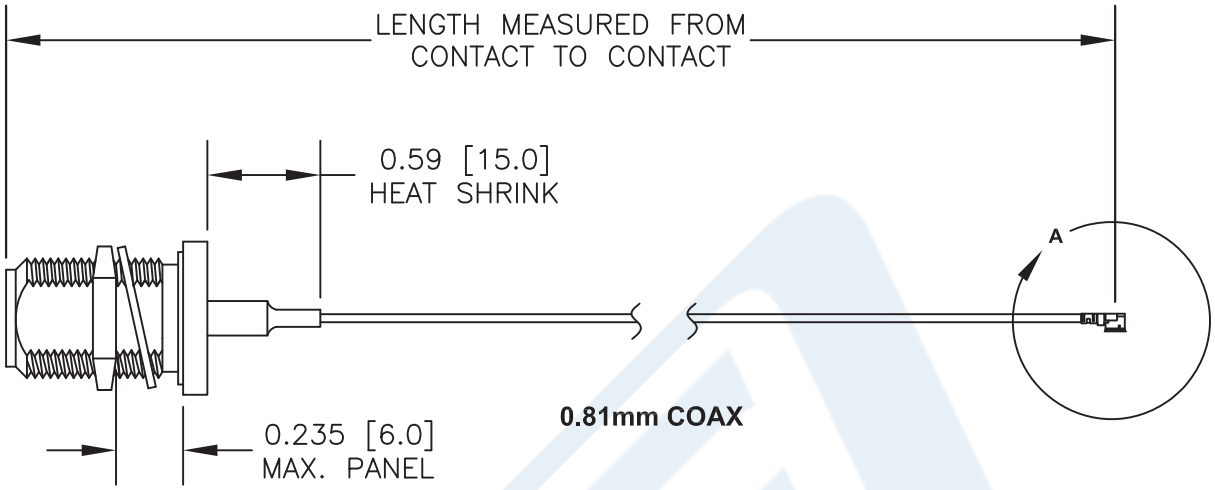

MOUNTING HOLE
FOR N FEMALE
BULKHEAD
CONNECTOR

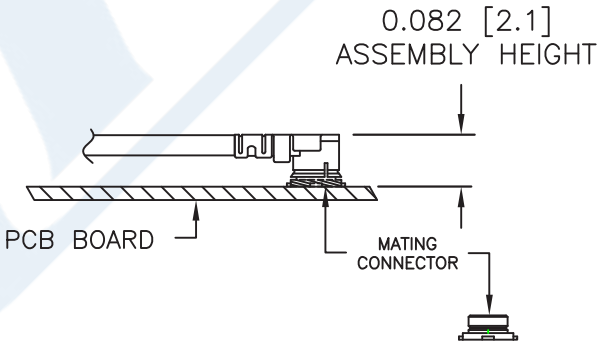

Mated View
[REF]

UMCX connectors are similar to U.FL*
***U.FL is a Registered Trademark of**
Hirose Electronic Group

PASTERNACK®
THE ENGINEER'S RF SOURCE
Pasternack Enterprises, Inc.
P.O. Box 16759 | Irvine | CA | 92623
Phone: (949) 261-1920 | **Fax:** (949) 261-7451
Website: www.pasternack.com | **E-Mail:** sales@pasternack.com

NOTES:
1. UNLESS OTHERWISE SPECIFIED ALL DIMENSIONS ARE NOMINAL.
2. ALL SPECIFICATIONS ARE SUBJECT TO CHANGE WITHOUT NOTICE AT ANY TIME.
3. DIMENSIONS ARE IN INCHES [mm].
4. LENGTH TOLERANCE IS ± 1.5% OR 3/8", WHICHEVER IS GREATER.

DWG TITLE	FSCM NO. 53919			
PE3CA1013				
CAD FILE 042115	SCALE N/A	SIZE A	2233	

© 2015 Pasternack Enterprises All Rights Reserved