CMOS
4/8 Channel Analog Multiplexers

ADG508A/ADG509A

FEATURES
44V Supply Maximum Rating
V_{SS} to V_{DD} Analog Signal Range
Single/Dual Supply Specifications
Wide Supply Ranges (10.8V to 16.5V)
Extended Plastic Temperature Range (−40°C to +85°C)
Low Power Dissipation (28mW max)
Low Leakage (20pA typ)
Available in 16-Lead DIP/SOIC and 20-Lead PLCC/LCCC Packages
Superior Alternative to:
DG508A, HI-508
DG509A, HI-509

FUNCTIONAL BLOCK DIAGRAMS

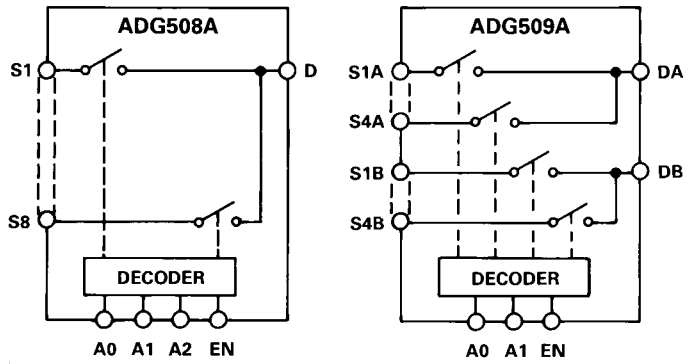

GENERAL DESCRIPTION

The ADG508A and ADG509A are CMOS monolithic analog multiplexers with 8 channels and dual 4 channels respectively. The ADG508A switches one of 8 inputs to a common output depending on the state of three binary addresses and an enable input. The ADG509A switches one of 4 differential inputs to a common differential output depending on the state of two binary addresses and an enable input. Both devices have TTL and 5V CMOS logic compatible digital inputs.

The ADG508A and ADG509A are designed on an enhanced LC^2MOS process which gives an increased signal capability of V_{SS} to V_{DD} and enables operation over a wide range of supply voltages. The devices can comfortably operate anywhere in the 10.8V to 16.5V single or dual supply range. These multiplexers also feature high switching speeds and low R_{ON}.

PRODUCT HIGHLIGHTS

1. Single/Dual Supply Specifications with a Wide Tolerance:
   The devices are specified in the 10.8V to 16.5V range for both single and dual supplies.
2. Extended Signal Range:
   The enhanced LC^2MOS processing results in a high breakdown and an increased analog signal range of V_{SS} to V_{DD}.
3. Break-Before-Make Switching:
   Switches are guaranteed break-before-make so that input signals are protected against momentary shorting.
4. Low Leakage:
   Leakage currents in the range of 20pA make these multiplexers suitable for high precision circuits.

ORDERING GUIDE

Model[1]	Temperature Range	Package Option[2]
ADG508AKN	−40°C to +85°C	N-16
ADG508AKR	−40°C to +85°C	R-16A
ADG508AKP	−40°C to +85°C	P-20A
ADG508ABQ	−40°C to +85°C	Q-16
ADG508ATQ	−55°C to +125°C	Q-16
ADG508ATE	−55°C to +125°C	E-20A
ADG509AKN	−40°C to +85°C	N-16
ADG509AKR	−40°C to +85°C	R-16A
ADG509AKP	−40°C to +85°C	P-20A
ADG509ABQ	−40°C to +85°C	Q-16
ADG509ATQ	−55°C to +125°C	Q-16
ADG509ATE	−55°C to +125°C	E-20A

NOTES
[1]To order MIL-STD-883, Class B processed parts, add /883B to part number. See Analog Devices Military Products Databook (1990) for military data sheet.
[2]E = Leadless Ceramic Chip Carrier (LCCC); N = Plastic DIP; P = Plastic Leaded Chip Carrier (PLCC); Q = Cerdip; R = 0.15" Small Outline IC (SOIC).

REV. B

Information furnished by Analog Devices is believed to be accurate and reliable. However, no responsibility is assumed by Analog Devices for its use, nor for any infringements of patents or other rights of third parties which may result from its use. No license is granted by implication or otherwise under any patent or patent rights of Analog Devices.

One Technology Way, P.O. Box 9106, Norwood, MA 02062-9106, U.S.A.
Tel: 617/329-4700 **Fax: 617/326-8703**

This datasheet has been downloaded from http://www.digchip.com at this page

ADG508A/ADG509A—SPECIFICATIONS

DUAL SUPPLY (V_{DD} = +10.8V to +16.5V, V_{SS} = −10.8V to −16.5V unless otherwise specified)

Parameter	ADG508A ADG509A K Version +25°C	ADG508A ADG509A K Version −40°C to +85°C	ADG508A ADG509A B Version 25°C	ADG508A ADG509A B Version −40°C to +85°C	ADG508A ADG509A T Version +25°C	ADG508A ADG509A T Version −55°C to +125°C	Units	Comments
ANALOG SWITCH								
Analog Signal Range	V_{SS}	V_{SS}	V_{SS}	V_{SS}	V_{SS}	V_{SS}	V min	
	V_{DD}	V_{DD}	V_{DD}	V_{DD}	V_{DD}	V_{DD}	V max	
R_{ON}	280		280		280		Ω typ	$-10V \leq V_S \leq +10V$, I_{DS} = 1mA; Test Circuit 1
	450	600	450	600	450	600	Ω max	
	300	400	300	400			Ω max	V_{DD} = 15V(±10%), V_{SS} = −15V(±10%)
					300	400	Ω max	V_{DD} = 15V(±5%), V_{SS} = −15V(±5%)
R_{ON} Drift	0.6		0.6		0.6		%/°C typ	V_S = 0, I_{DS} = 1mA
R_{ON} Match	5		5		5		% typ	$-10V \leq V_S \leq +10V$, I_{DS} = 1mA
I_S (OFF), Off Input Leakage	0.02		0.02		0.02		nA typ	V1 = ±10V, V2 = ∓10V; Test Circuit 2
	1	50	1	50	1	50	nA max	
I_D (OFF), Off Output Leakage	0.04		0.04		0.04		nA typ	V1 = +10V, V2 = ∓10V; Test Circuit 3
ADG508A	1	100	1	100	1	100	nA max	
ADG509A	1	50	1	50	1	50	nA max	
I_D (ON), On Channel Leakage	0.04		0.04		0.04		nA typ	V1 = V2 = ±10V; Test Circuit 4
ADG508A	1	100	1	100	1	100	nA max	
ADG509A	1	50	1	50	1	50	nA max	
I_{DIFF}, Differential Off Output Leakage (ADG509A only)		25		25		25	nA max	V1 = ±10V, V2 = ∓10V; Test Circuit 5
DIGITAL CONTROL								
V_{INH}, Input High Voltage		2.4		2.4		2.4	V min	
V_{INL}, Input Low Voltage		0.8		0.8		0.8	V max	
I_{INL} or I_{INH}		1		1		1	μA max	V_{IN} = 0 to V_{DD}
C_{IN} Digital Input Capacitance	8		8		8		pF max	
DYNAMIC CHARACTERISTICS								
$t_{TRANSITION}$[1]	200		200		200		ns typ	V1 = ±10V, V2 = ∓10V; Test Circuit 6
	300	400	300	400	300	400	ns max	
t_{OPEN}[1]	50		50		50		ns typ	Test Circuit 7
	25	10	25	10	25	10	ns min	
t_{ON} (EN)[1]	200		200		200		ns typ	Test Circuit 8
	300	400	300	400	300	400	ns max	
t_{OFF} (EN)[1]	200		200		200		ns typ	Test Circuit 8
	300	400	300	400	300	400	ns max	
OFF Isolation	68		68		68		dB typ	V_{EN} = 0.8V, R_L = 1kΩ, C_L = 15pF,
	50		50		50		dB min	V_S = 7V rms, f = 100kHz
C_S (OFF)	5		5		5		pF typ	V_{EN} = 0.8V
C_D (OFF)								
ADG508A	22		22		22		pF typ	V_{EN} = 0.8V
ADG509A	11		11		11		pF typ	
Q_{INJ}, Charge Injection	4		4		4		pC typ	R_S = 0Ω, V_S = 0; Test Circuit 9
POWER SUPPLY								
I_{DD}	0.6		0.6		0.6		mA typ	V_{IN} = V_{INL} or V_{INH}
		1.5		1.5		1.5	mA max	
I_{SS}	20		20		20		μA typ	V_{IN} = V_{INL} or V_{INH}
		0.2		0.2		0.2	mA max	
Power Dissipation	10		10		10		mW typ	
		28		28		28	mW max	

NOTE
[1]Sample tested at 25°C to ensure compliance.
Specifications subject to change without notice.

SINGLE SUPPLY (V_{DD} = +10.8V to +16.5V, V_{SS} = GND = 0V unless otherwise noted.)

Parameter	ADG508A ADG509A K Version +25°C	ADG508A ADG509A K Version −40°C to +85°C	ADG508A ADG509A B Version +25°C	ADG508A ADG509A B Version −40°C to +85°C	ADG508A ADG509A T Version +25°C	ADG508A ADG509A T Version −55°C to +125°C	Units	Comments
ANALOG SWITCH								
Analog Signal Range	GND	GND	GND	GND	GND	GND	V min	
	V_{DD}	V_{DD}	V_{DD}	V_{DD}	V_{DD}	V_{DD}	V max	
R_{ON}	500		500		500		Ω typ	GND≤V_S≤+10V, I_{DS}=0.5mA Test; Circuit 1
	700	1000	700	1000	700	1000	Ω max	
R_{ON} Drift	0.6		0.6		0.6		%/°C typ	V_S=0, I_{DS}=0.5mA
R_{ON} Match	5		5		5		% typ	GND≤V_S≤+10V, I_{DS}=0.5mA
I_S (OFF), Off Input Leakage	0.02		0.02		0.02		nA typ	V1 = +10V/GND, V2 = GND/+10V,
	1	50	1	50	1	50	nA max	Test Circuit 2
I_D (OFF), Off Output Leakage	0.04		0.04		0.04		nA typ	V1 = +10V/GND, V2 = GND/+10V;
ADG508A	1	100	1	100	1	100	nA max	Test Circuit 3
ADG509A	1	50	1	50	1	50	nA max	
I_D (ON), On Channel Leakage	0.04		0.04		0.04		nA typ	V1 = V2 = +10V/GND;
ADG508A	1	100	1	100	1	100	nA max	Test Circuit 4
ADG509A	1	50	1	50	1	50	nA max	
I_{DIFF}, Differential Off Output Leakage (ADG509A only)		25		25		25	nA max	V1 = +10V/GND, V2 = GND/+10V; Test Circuit 5
DIGITAL CONTROL								
V_{INH}, Input High Voltage		2.4		2.4		2.4	V min	
V_{INL}, Input Low Voltage		0.8		0.8		0 8	V max	
I_{INL} or I_{INH}		1		1		1	μA max	V_{IN} = 0 to V_{DD}
C_{IN} Digital Input Capacitance	8		8		8		pF max	
DYNAMIC CHARACTERISTICS								
$t_{TRANSITION}$[1]	300		300		300		ns typ	V1 = +10V/GND, V2 = GND/+10V; Test Cicuit 6
	450	600	450	600	450	600	ns max	
t_{OPEN}[1]	50		50		50		ns typ	Test Circuit 7
	25	10	25	10	25	10	ns min	
t_{ON} (EN)[1]	250		250		250		ns typ	Test Circuit 8
	450	600	450	600	450	600	ns max	
t_{OFF} (EN)[1]	250		250		250		ns typ	Test Circuit 8
	450	600	450	600	450	600	ns max	
OFF Isolation	68		68		68		dB typ	V_{EN} = 0.8V, R_L = 1kΩ, C_L = 15pF,
	50		50		50		dB min	V_S = 3.5V rms, f = 100kHz
C_S (OFF)	5		5		5		pF typ	V_{EN} = 0.8V
C_D (OFF)								
ADG508A	22		22		22		pF typ	V_{EN} = 0.8V
ADG509A	11		11		11		pF typ	
Q_{INJ}, Charge Injection	4		4		4		pC typ	R_S = 0Ω, V_S = 0V; Test Circuit 9
POWER SUPPLY								
I_{DD}	0.6		0.6		0.6		mA typ	V_{IN} = V_{INL} or V_{INH}
		1.5		1.5		1.5	mA max	
Power Dissipation	10		10		10		mW typ	
		25		25		25	mW max	

NOTE
[1]Sample tested at 25°C to ensure compliance.
Specifications subject to change without notice.

TERMINOLOGY

R_{ON}	Ohmic resistance between terminals D and S
R_{ON} Match	Difference between the R_{ON} of any two channels
R_{ON} Drift	Change in R_{ON} versus temperature
I_S (OFF)	Source terminal leakage current when the switch is off
I_D (OFF)	Drain terminal leakage current when the switch is off
I_D (ON)	Leakage current that flows from the closed switch into the body
V_S (V_D)	Analog voltage on terminal S or D
C_S (OFF)	Channel input capacitance for "OFF" condition
C_D (OFF)	Channel output capacitance for "OFF" condition
C_{IN}	Digital input capacitance
t_{OFF} (EN)	Delay time between the 50% and 10% points of the digital input and switch "OFF" condition
$t_{TRANSITION}$	Delay time between the 50% and 90% points of the digital inputs and switch "ON" condition when switching from one address state to another
t_{OPEN}	"OFF" time measured between 50% points of both switches when switching from one address state to another
V_{INL}	Maximum input voltage for Logic "0"
V_{INH}	Minimum input voltage for Logic "1"
I_{INL} (I_{INH})	Input current of the digital input
V_{DD}	Most positive voltage supply
V_{SS}	Most negative voltage supply
I_{DD}	Positive supply current
I_{SS}	Negative supply current

ABSOLUTE MAXIMUM RATINGS*

(T_A = 25°C unless otherwise noted)

V_{DD} to V_{SS} 44V
V_{DD} to GND 25V
V_{SS} to GND . . . . . −25V
Analog Inputs[1]
Voltage at S, D . . . . . V_{SS} −2V to V_{DD} +2V or 20mA, Whichever Occurs First
Continuous Current, S or D 20mA
Pulsed Current S or D
1ms Duration, 10% Duty Cycle 40mA
Digital Inputs[1]
Voltage at A, EN . . . . . V_{SS} −4V to V_{DD} +4V or 20mA, Whichever Occurs First
Power Dissipation (Any Package)
Up to +75°C 470mW
Derates above +75°C by . . . . . 6mW/°C
Operating Temperature
Commercial (K Version) . . . . . −40°C to +85°C
Industrial (B Version) . . . . . −40°C to +85°C
Extended (T Version) . . . . . −55°C to +125°C
Storage Temperature Range . . . . . −65°C to +150°C

NOTE
[1]Overvoltage at A, EN, S or D will be clamped by diodes. Current should be limited to the Maximum Rating above.

TRUTH TABLES

A2	A1	A0	EN	ON SWITCH
X	X	X	0	NONE
0	0	0	1	1
0	0	1	1	2
0	1	0	1	3
0	1	1	1	4
1	0	0	1	5
1	0	1	1	6
1	1	0	1	7
1	1	1	1	8

X = Don't Care

ADG508A

A1	A0	EN	ON SWITCH PAIR
X	X	0	NONE
0	0	1	1
0	1	1	2
1	0	1	3
1	1	1	4

X = Don't Care

ADG509A

*COMMENT: Stresses above those listed under "Absolute Maximum Ratings" may cause permanent damage to the device. This is a stress rating only and functional operation of the device at these or any other conditions above those indicated in the operational sections of this specification is not implied. Exposure to absolute maximum rating conditions for extended periods may affect device reliability.

CAUTION

ESD (electrostatic discharge) sensitive device. The digital control inputs are Zener protected; however, permanent damage may occur on unconnected devices subject to high energy electrostatic fields. Unused devices must be stored in conductive foam or shunts. The protective foam should be discharged to the destination socket before devices are removed.

PIN CONFIGURATIONS

DIP, SOIC

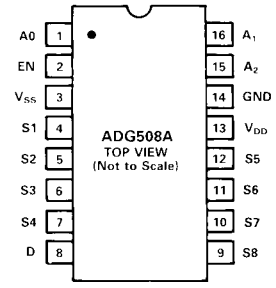

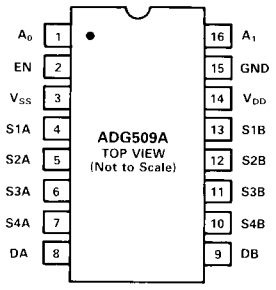

LCCC

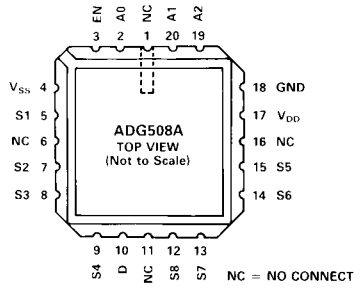

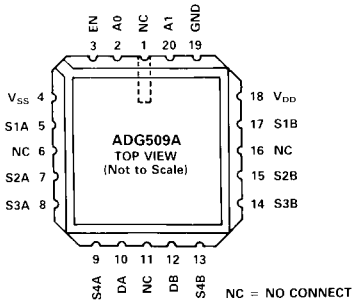

PLCC

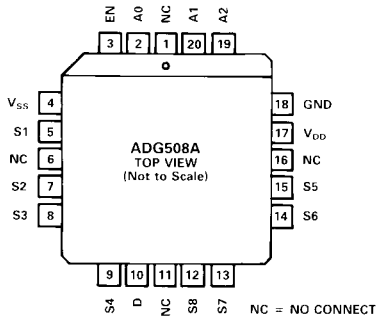

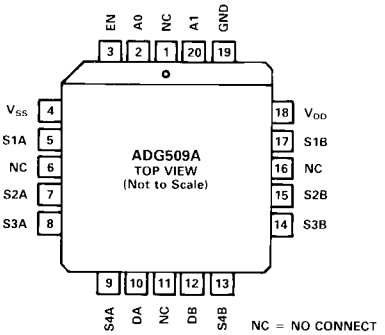

The multiplexers are guaranteed functional with reduced single or dual supplies down to 4.5V.

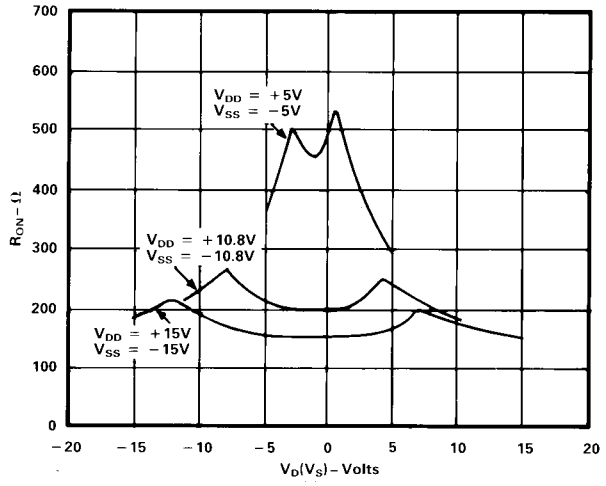

R_{ON} as a Function of $V_D(V_S)$: Dual Supply Voltage, T_A = +25°C

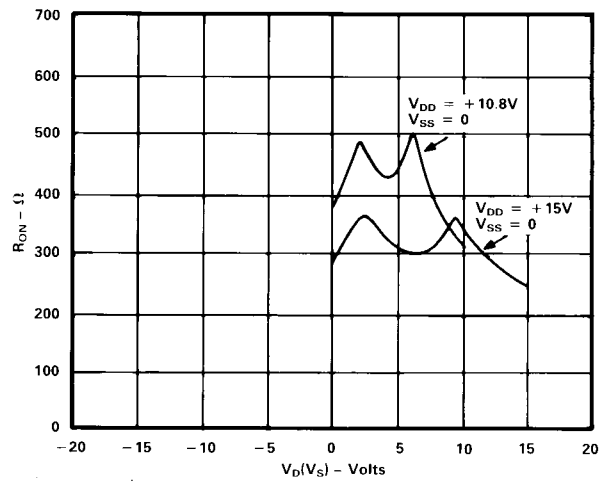

R_{ON} as a Function of $V_D(V_S)$: Single Supply Voltage, T_A = +25°C

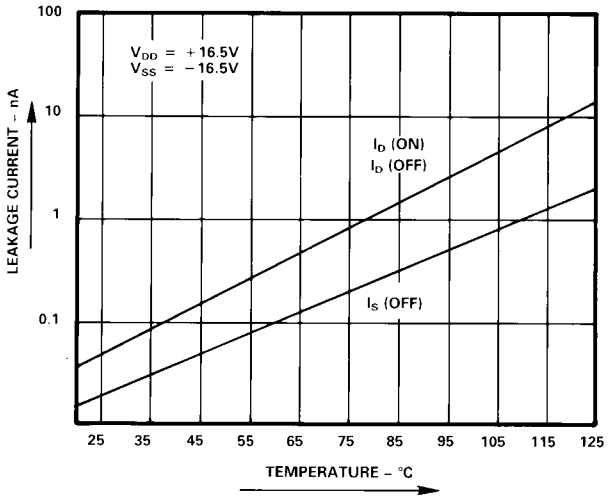

Leakage Current as a Function of Temperature (Note: Leakage Currents Reduce as the Supply Voltages Reduce)

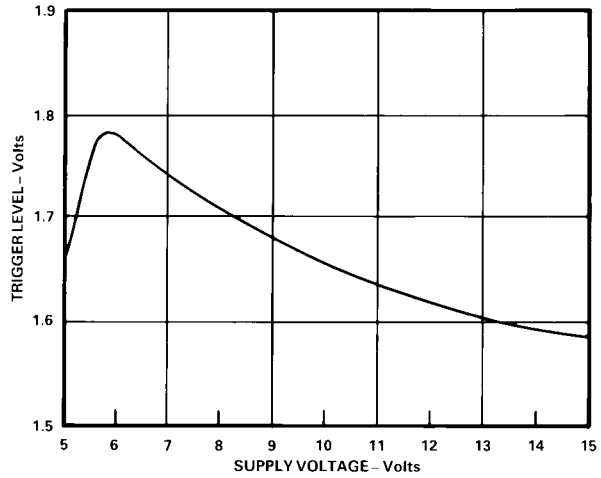

Trigger Levels vs. Power Supply Voltage, Dual or Single Supply, T_A = +25°C

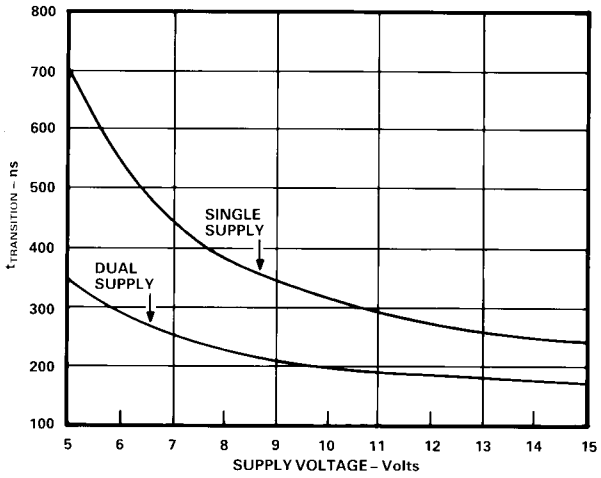

$t_{TRANSITION}$ vs. Supply Voltage: Dual and Single Supplies, T_A = +25°C (Note: For V_{DD} and $|V_{SS}|$ < 10V; V1 = V_{DD}/V_{SS}, V2 = V_{SS}/V_{DD}. See Test Circuit 6)

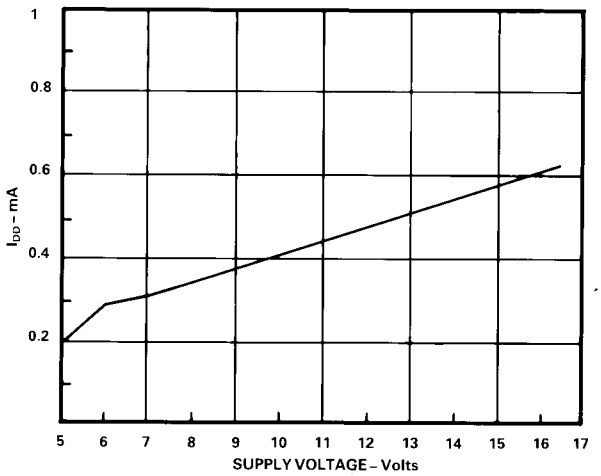

I_{DD} vs. Supply Voltage: Dual or Single Supply, T_A = +25°C

ADG508A/ADG509A—Test Circuits

Note: All Digital Input Signal Rise and Fall Times Measured from 10% to 90% of 3V. $t_R = t_F = 20ns$.

TEST CIRCUIT 1
R_{ON}

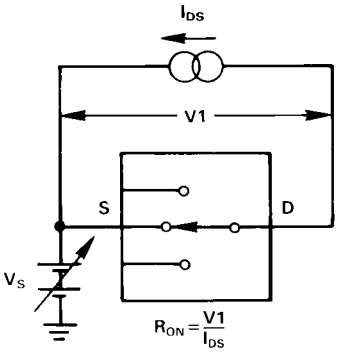

TEST CIRCUIT 2
I_S (OFF)

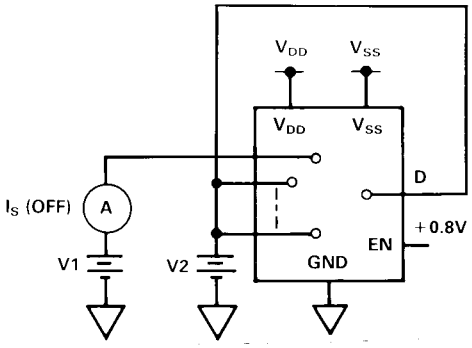

TEST CIRCUIT 3
I_D (OFF)

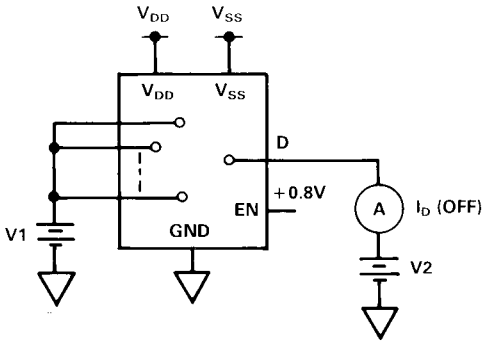

TEST CIRCUIT 4
I_D (ON)

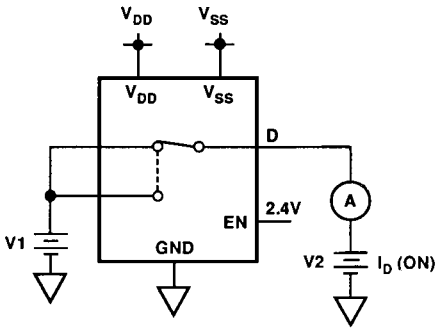

TEST CIRCUIT 5
I_{DIFF}

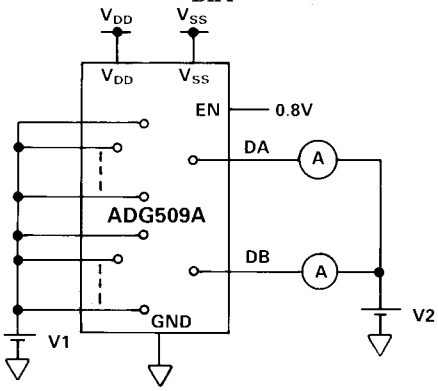

$I_{DIFF} = I_{DA}(OFF) - I_{DB}(OFF)$

TEST CIRCUIT 6
SWITCHING TIME OF MULTIPLEXER, $t_{TRANSITION}$

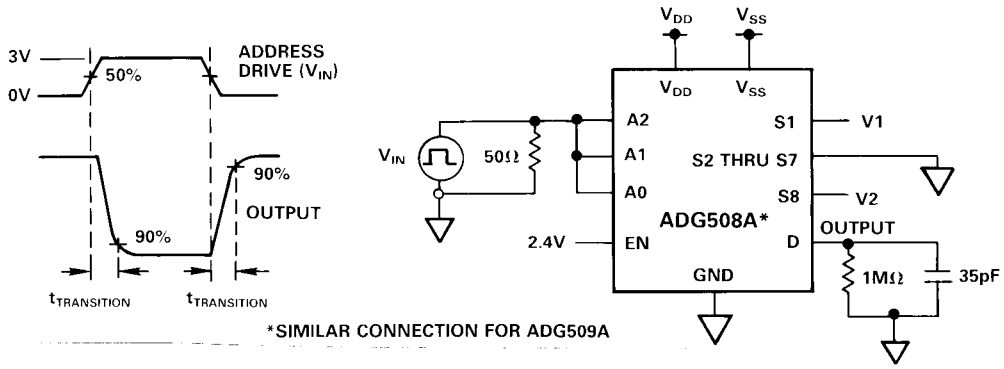

*SIMILAR CONNECTION FOR ADG509A

TEST CIRCUIT 7
BREAK-BEFORE-MAKE DELAY, t_{OPEN}

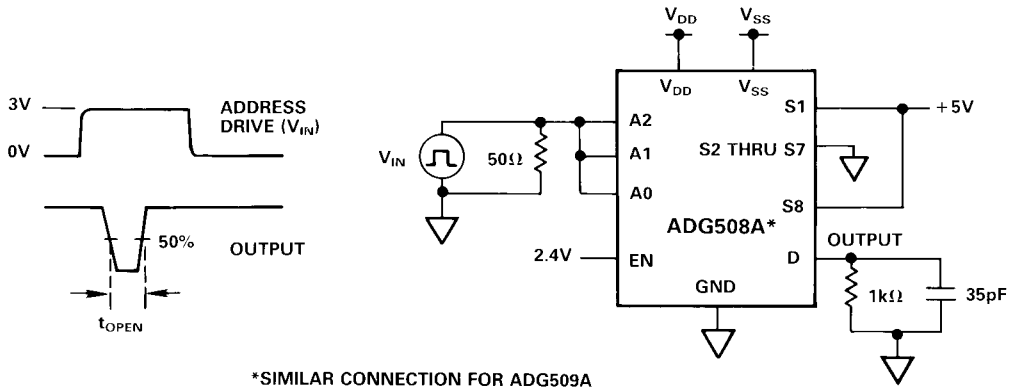

*SIMILAR CONNECTION FOR ADG509A

TEST CIRCUIT 8
ENABLE DELAY, t_{ON} (EN), t_{OFF} (EN)

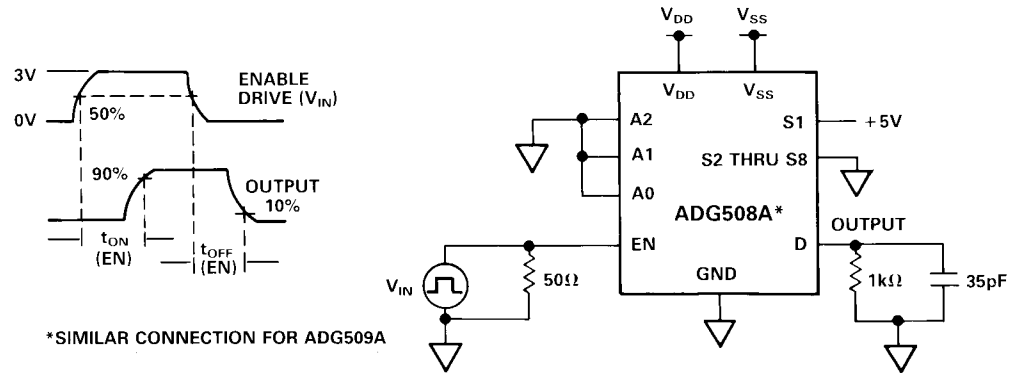

TEST CIRCUIT 9
CHARGE INJECTION

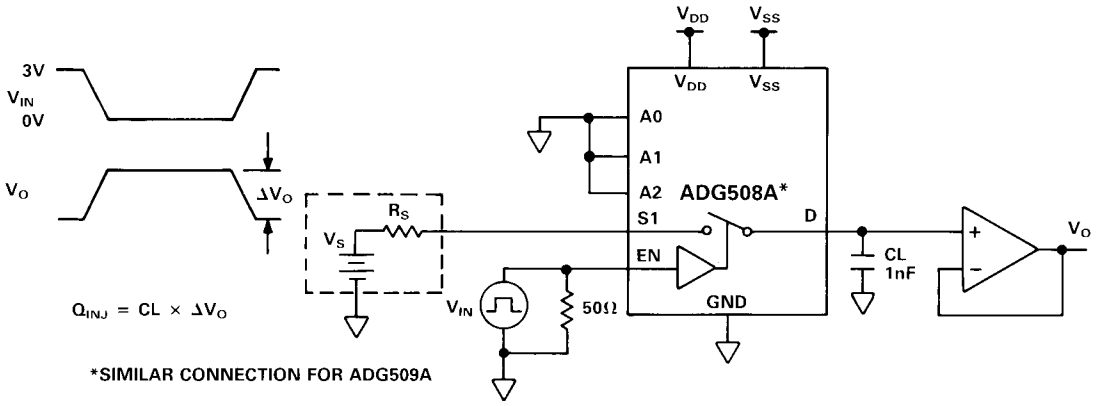

SINGLE SUPPLY OCTAL DAC APPLICATION

The following circuit shows the ADG508A connected as a demultiplexer to provide eight separate digitally programmable voltages (0 to +10V) from the AD7245. The AD7245 is a complete 12-bit, voltage output DAC with output amplifier and Zener voltage reference on a monolithic CMOS chip. The entire system operates from a single +15V power supply. The ADG508A is ideally suited for the application because it has both low charge injection and I_S (OFF) leakage current.

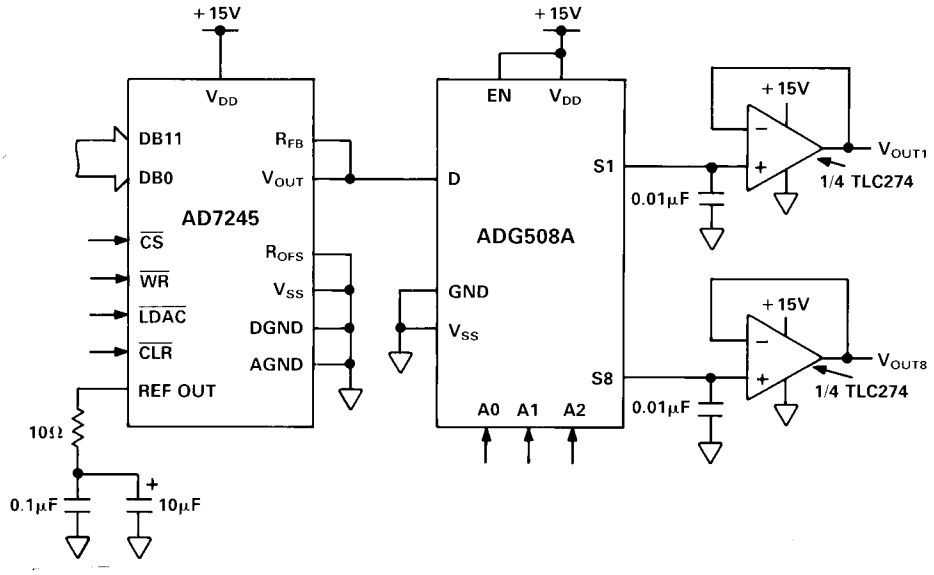

ADG508A in a Single-Supply Octal DAC Circuit

MECHANICAL INFORMATION
OUTLINE DIMENSIONS

Dimensions shown in inches and (mm).

16-Pin Plastic (N-16)

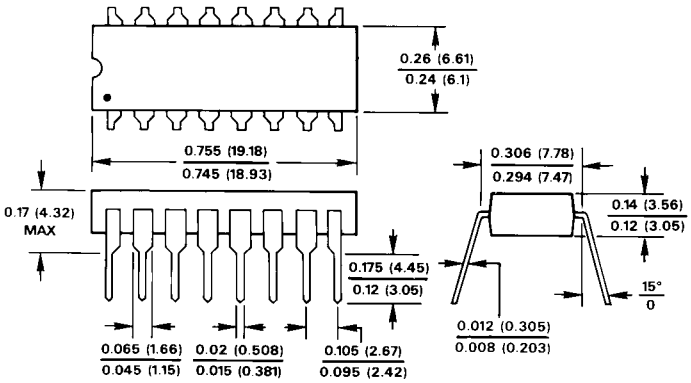

LEAD NO. 1 IDENTIFIED BY DOT OR NOTCH
LEADS ARE SOLDER OR TIN-PLATED KOVAR OR ALLOY 42

16-Pin Cerdip (Q-16)

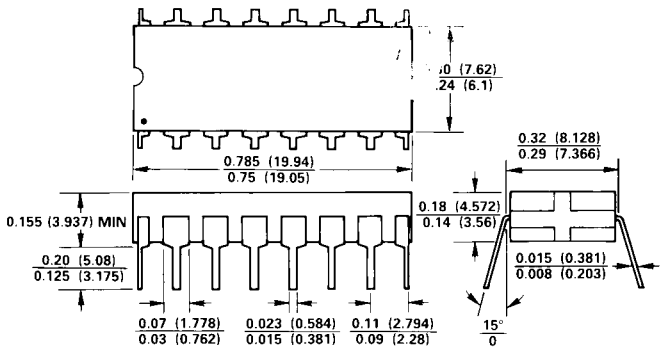

NOTES:
LEAD NO. 1 IDENTIFIED BY DOT OR NOTCH.
LEADS ARE SOLDER OF TIN-PLATED KOVAR OR ALLOY 42.

16-Lead Narrow Body SOIC (R-16A)

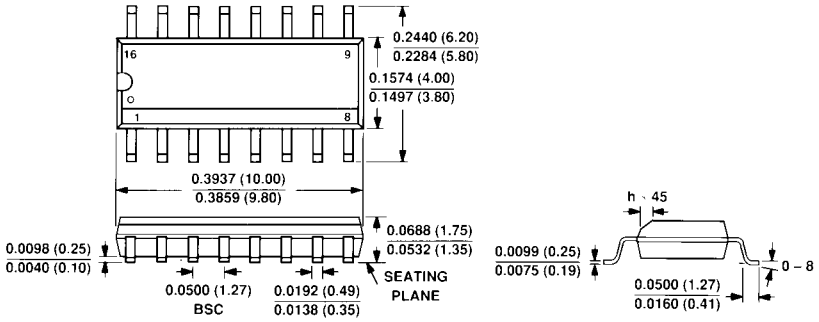

20-Terminal Leadless Ceramic Chip Carrier (E-20A)

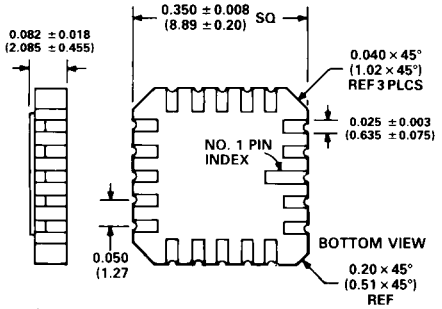

20-Terminal Plastic Leaded Chip Carrier (P-20A)

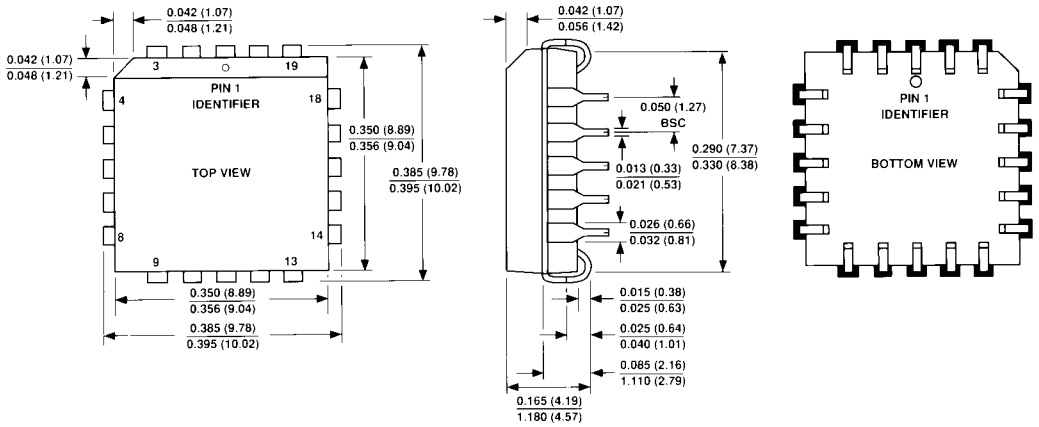

C104a – 9 – 11/87

PRINTED IN U.S.A.