BURR - BROWN®

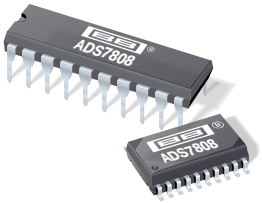

ADS7808

12-Bit 10µs Serial CMOS Sampling ANALOG-to-DIGITAL CONVERTER

FEATURES

- 100kHz SAMPLING RATE
- 72dB SINAD WITH 45kHz INPUT
- ±1/2 LSB INL AND DNL
- SIX SPECIFIED INPUT RANGES
- SERIAL OUTPUT
- SINGLE +5V SUPPLY OPERATION
- PIN-COMPATIBLE WITH 16-BIT ADS7809
- USES INTERNAL OR EXTERNAL REFERENCE
- 100mW MAX POWER DISSIPATION
- 20-PIN 0.3" PLASTIC DIP AND SOIC
- SIMPLE DSP INTERFACE

DESCRIPTION

The ADS7808 is a complete 12-bit sampling analog-to-digital using state-of-the-art CMOS structures. It contains a 12-bit capacitor-based SAR A/D with S/H, reference, clock, and a serial data interface. Data can be output using the internal clock, or can be synchronized to an external data clock. The ADS7808 also provides an output synchronization pulse for ease of use with standard DSP processors.

The ADS7808 is specified at a 100kHz sampling rate, and guaranteed over the full temperature range. Laser-trimmed scaling resistors provide various input ranges including ±10V and 0V to 5V, while an innovative design operates from a single +5V supply, with power dissipation under 100mW.

The 20-pin ADS7808 is available in a plastic 0.3" DIP and in an SOIC, both fully specified for operation over the industrial –40°C to +85°C range.

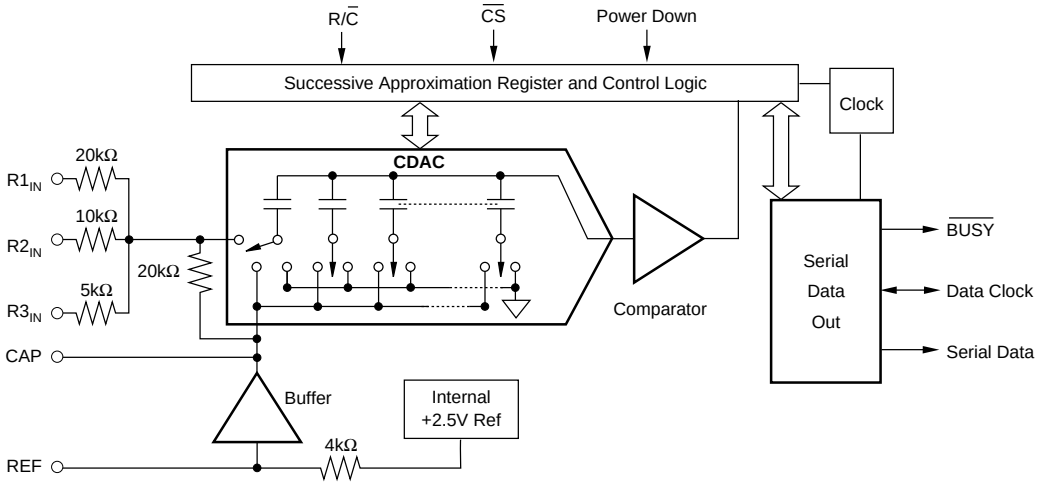

International Airport Industrial Park • Mailing Address: PO Box 11400, Tucson, AZ 85734 • Street Address: 6730 S. Tucson Blvd., Tucson, AZ 85706 • Tel: (520) 746-1111 • Twx: 910-952-1111
Internet: http://www.burr-brown.com/ • FAXLine: (800) 548-6133 (US/Canada Only) • Cable: BBRCORP • Telex: 066-6491 • FAX: (520) 889-1510 • Immediate Product Info: (800) 548-6132

©1992 Burr-Brown Corporation
PDS-1155B
Printed in U.S.A. January 1997

SPECIFICATIONS

ELECTRICAL

At T_A = –40°C to +85°C, f_S = 100kHz, V_{DIG} = V_{ANA} = +5V, using internal reference and fixed resistors as shown in Figure 4, unless otherwise specified.

PARAMETER	CONDITIONS	ADS7808P, U MIN	ADS7808P, U TYP	ADS7808P, U MAX	ADS7808PB, UB MIN	ADS7808PB, UB TYP	ADS7808PB, UB MAX	UNITS
RESOLUTION				12			*	Bits
ANALOG INPUT								
Voltage Ranges			±10V, 0V to 5V, etc. (See Table I)					
Impedance			See Table I					
Capacitance			35			*		pF
THROUGHPUT SPEED								
Conversion Time			5.7	8		*	*	µs
Complete Cycle	Acquire and Convert			10			*	µs
Throughput Rate		100			*			kHz
DC ACCURACY								
Integral Linearity Error				±0.9			±0.45	LSB[1]
Differential Linearity Error				±0.9			±0.45	LSB
No Missing Codes			Guaranteed			*		
Transition Noise[2]			0.1			*		LSB
Full Scale Error[3,4]				±0.5			±0.25	%
Full Scale Error Drift			±7			±5		ppm/°C
Full Scale Error[3,4]	Ext. 2.5000V Ref			±0.5			±0.25	%
Full Scale Error Drift	Ext. 2.5000V Ref		±2			*		ppm/°C
Bipolar Zero Error[3]	Bipolar Ranges			±10			*	mV
Bipolar Zero Error Drift	Bipolar Ranges		±2			±2		ppm/°C
Unipolar Zero Error[3]	0V to 10V Range			±5			*	mV
	0V to 4V Range			±3			*	mV
	0V to 5V Range			±3			*	mV
Unipolar Zero Error Drift	Unipolar Ranges		±2			*		ppm/°C
Recovery to Rated Accuracy after Power Down	1µF Capacitor to CAP		1			*		ms
Power Supply Sensitivity (V_{DIG} = V_{ANA} = V_D)	+4.75V < V_D < +5.25V			±0.5			*	LSB
AC ACCURACY								
Spurious-Free Dynamic Range	f_{IN} = 45kHz	80	90		*	*		dB[5]
Total Harmonic Distortion	f_{IN} = 45kHz		–90	–80		*	*	dB
Signal-to-(Noise+Distortion)	f_{IN} = 45kHz	70	73		72	*		dB
Signal-to-Noise	f_{IN} = 45kHz	70	73		72	*		dB
Full-Power Bandwidth[6]			250			*		kHz
SAMPLING DYNAMICS								
Aperture Delay			40			*		ns
Aperture Jitter			Sufficient to meet AC specs			*		ns
Transient Response	FS Step			2			*	µs
Overvoltage Recovery[7]			150			*		ns
REFERENCE								
Internal Reference Voltage	No Load	2.48	2.5	2.52	*	*	*	V
Internal Reference Source Current (Must use external buffer)			1			*		µA
External Reference Voltage Range for Specified Linearity		2.3	2.5	2.7	*	*	*	V
External Reference Current Drain	Ext. 2.5000V Ref			100			*	µA
DIGITAL INPUTS								
Logic Levels								
V_{IL}		–0.3		+0.8	*		*	V
V_{IH}		+2.0		V_D +0.3V	*		*	V
I_{IL}	V_{IL} = 0V			±10			*	µA
I_{IH}	V_{IH} = 5V			±10			*	µA

The information provided herein is believed to be reliable; however, BURR-BROWN assumes no responsibility for inaccuracies or omissions. BURR-BROWN assumes no responsibility for the use of this information, and all use of such information shall be entirely at the user's own risk. Prices and specifications are subject to change without notice. No patent rights or licenses to any of the circuits described herein are implied or granted to any third party. BURR-BROWN does not authorize or warrant any BURR-BROWN product for use in life support devices and/or systems.

SPECIFICATIONS (CONT)

ELECTRICAL

At T_A = –40°C to +85°C, f_S = 100kHz, V_{DIG} = V_{ANA} = +5V, using internal reference and fixed resistors shown in Figure 4, unless otherwise specified.

PARAMETER	CONDITIONS	ADS7808P/U MIN	ADS7808P/U TYP	ADS7808P/U MAX	ADS7808PB/UB MIN	ADS7808PB/UB TYP	ADS7808PB/UB MAX	UNITS
DIGITAL OUTPUTS								
Data Format				Serial 12 bits				
Data Coding				Binary Two's Complement or Straight Binary				
Pipeline Delay				Conversion results only available after completed conversion.				
Data Clock				Selectable for internal or external data clock				
Internal	EXT/$\overline{INT}$ LOW		2.3			*		MHz
(Output Only When Transmitting Data)								
External	EXT/$\overline{INT}$ HIGH	0.1		10	*		*	MHz
(Can Run Continually)								
V_{OL}	I_{SINK} = 1.6mA			+0.4			*	V
V_{OH}	I_{SOURCE} = 500µA	+4			*			V
Leakage Current	High-Z State, V_{OUT} = 0V to V_{DIG}			±5			*	µA
Output Capacitance	High-Z State			15			15	pF
POWER SUPPLIES								
Specified Performance								
V_{DIG}	Must be ≤ V_{ANA}	+4.75	+5	+5.25	*	*	*	V
V_{ANA}	+4.75	+5	+5.25	*	*	*	V	
I_{DIG}		0.3			*		mA	
I_{ANA}		16			*		mA	
Power Dissipation: PWRD LOW	V_{DIG} = V_{ANA} = 5V, f_S = 100kHz			100			*	mW
PWRD HIGH			50			*		µW
TEMPERATURE RANGE								
Specified Performance		–40		+85	*		*	°C
Derated Performance		–55		+125	*		*	°C
Storage		–65		+150	*		*	°C
Thermal Resistance (θ_{JA})								
Plastic DIP			75			*		°C/W
SOIC			75			*		°CW

NOTES: (1) LSB means Least Significant Bit. For the ±10V input range, one LSB is 4.88mV. (2) Typical rms noise at worst case transitions and temperatures. (3) As measured with fixed resistors in Figure 4. Adjustable to zero with external potentiometer. (4) For bipolar input ranges, full scale error is the worst case of –Full Scale or +Full Scale untrimmed deviation from ideal first and last code transitions, divided by the transition voltage (not divided by the full-scale range) and includes the effect of offset error. For unipolar input ranges, full scale error is the deviation of the last code transition divided by the transition voltage. It also includes the effect of offset error. (5) All specifications in dB are referred to a full-scale ±10V input. (6) Full-Power Bandwidth defined as Full-Scale input frequency at which Signal-to (Noise + Distortion) degrades to 60dB. (7) Recovers to specified performance after 2 x FS input overvoltage.

ABSOLUTE MAXIMUM RATINGS

Analog Inputs: $R1_{IN}$ ..... ±25V
$R2_{IN}$ ..... ±25V
$R3_{IN}$ ..... ±25V
CAP ..... V_{ANA}+0.3V to AGND2 –0.3V
REF ..... Indefinite Short to AGND2, Momentary Short to V_{ANA}
Ground Voltage Differences: DGND, AGND2 ..... ±0.3V
V_{ANA} 7V
V_{DIG} to V_{ANA} ..... +0.3
V_{DIG} 7V
Digital Inputs ..... –0.3V to V_{DIG} +0.3V
Maximum Junction Temperature ..... +165°C
Internal Power Dissipation 700mW
Lead Temperature (soldering, 10s) ..... +300°C

ELECTROSTATIC DISCHARGE SENSITIVITY

Electrostatic discharge can cause damage ranging from performance degradation to complete device failure. Burr-Brown Corporation recommends that this integrated circuit be handled and stored using appropriate ESD protection methods.

PACKAGE INFORMATION

PRODUCT	PACKAGE	PACKAGE DRAWING NUMBER[1]
ADS7808P	20-Pin Plastic DIP	222
ADS7808PB	20-Pin Plastic DIP	222
ADS7808U	20-Pin SOIC	221
ADS7808UB	20-Pin SOIC	221

NOTE: (1) For detailed drawing and dimension table, please see end of data sheet, or Appendix C of Burr-Brown IC Data Book.

ORDERING INFORMATION

PRODUCT	MAXIMUM LINEARITY ERROR (LSB)	MINIMUM SIGNAL-TO-(NOISE + DISTORTION) RATIO(dB)	SPECIFICATION TEMPERATURE RANGE (°C)	PACKAGE
ADS7808P	±0.9	70	–40°C to +85°C	20-Pin Plastic DIP
ADS7808PB	±0.45	72	–40°C to +85°C	20-Pin Plastic DIP
ADS7808U	±0.9	70	–40°C to +85°C	20-Pin SOIC
ADS7808UB	±0.45	72	–40°C to +85°C	20-Pin SOIC

PIN ASSIGNMENTS

PIN #	NAME	DESCRIPTION
1	$R1_{IN}$	Analog Input. See Table I and Figure 4 for input range connections.
2	AGND1	Analog Ground. Used internally as ground reference point. Minimal current flow.
3	$R2_{IN}$	Analog Input. See Table I and Figure 4 for input range connections.
4	$R3_{IN}$	Analog Input. See Table I and Figure 4 for input range connections.
5	CAP	Reference Buffer Capacitor. 2.2µF Tantalum to ground.
6	REF	Reference Input/Output. Outputs internal 2.5V reference. Can also be driven by external system reference. In both cases, bypass to ground with a 2.2µF Tantalum capacitor.
7	AGND2	Analog Ground.
8	SB/$\overline{BTC}$	Select Straight Binary or Binary Two's Complement data output format. If HIGH, data will be output in a Straight Binary format. If LOW, data will be output in a Binary Two's complement format.
9	EXT/$\overline{INT}$	Select External or Internal Clock for transmitting data. If HIGH, data will be output synchronized to the clock input on DATACLK. If LOW, a convert command will initiate the transmission of the data from the previous conversion, along with 12 clock pulses output on DATACLK.
10	DGND	Digital Ground.
11	SYNC	Synch Output. If EXT/$\overline{INT}$ is HIGH, either a rising edge on R/$\overline{C}$ with $\overline{CS}$ LOW or a falling edge on $\overline{CS}$ with R/$\overline{C}$ HIGH will output a pulse on SYNC synchronized to the external DATACLK.
12	DATACLK	Either an input or an output depending on the EXT/$\overline{INT}$ level. Output data will be synchronized to this clock. If EXT/$\overline{INT}$ is LOW, DATACLK will transmit 12 pulses after each conversion, and then remain LOW between conversions.
13	DATA	Serial Data Output. Data will be synchronized to DATACLK, with the format determined by the level of SB/$\overline{BTC}$. In the external clock mode, after 12-bits of data, the ADS7808 will output the level input on TAG as long as $\overline{CS}$ is LOW and R/$\overline{C}$ is HIGH (see Figure 3.) If EXT/$\overline{INT}$ is LOW, data will be valid on both the rising and falling edges of DATACLK, and between conversions DATA will stay at the level of the TAG input when the conversion was started.
14	TAG	Tag Input for use in external clock mode. If EXT/$\overline{INT}$ is HIGH, digital data input on TAG will be output on DATA with a delay of 12 DATACLK pulses as long as $\overline{CS}$ is LOW and R/$\overline{C}$ is HIGH. See Figure 3.
15	R/$\overline{C}$	Read/Convert Input. With $\overline{CS}$ LOW, a falling edge on R/$\overline{C}$ puts the internal sample/hold into the hold state and starts a conversion. When EXT/$\overline{INT}$ is LOW, this also initiates the transmission of the data results from the previous conversion. If EXT/$\overline{INT}$ is HIGH, a rising edge on R/$\overline{C}$ with $\overline{CS}$ LOW, or a falling edge on $\overline{CS}$ with R/$\overline{C}$ HIGH, transmits a pulse on SYNC and initiates the transmission of data from the previous conversion.
16	$\overline{CS}$	Chip Select. Internally OR'ed with R/$\overline{C}$.
17	$\overline{BUSY}$	Busy Output. Falls when a conversion is started, and remains LOW until the conversion is completed and the data is latched into the output shift register. $\overline{CS}$ or R/$\overline{C}$ must be HIGH when $\overline{BUSY}$ rises, or another conversion will start without time for signal acquisition.
18	PWRD	Power Down Input. If HIGH, conversions are inhibited and power consumption is significantly reduced. Results from the previous conversion are maintained in the output shift register.
19	V_{ANA}	Analog Supply Input. Nominally +5V. Connect directly to pin 20, and decouple to ground with 0.1µF ceramic and 10µF Tantalum capacitors.
20	V_{DIG}	Digital Supply Input. Nominally +5V. Connect directly to pin 19. Must be $\leq V_{ANA}$.

PIN CONFIGURATION

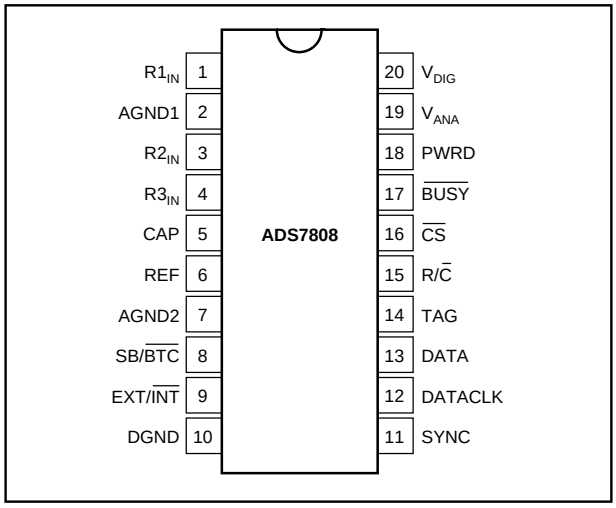

ANALOG INPUT RANGE	CONNECT $R1_{IN}$ VIA 200Ω TO	CONNECT $R2_{IN}$ VIA 100Ω TO	CONNECT $R3_{IN}$ TO	IMPEDANCE
±10V	V_{IN}	AGND	CAP	22.9kΩ
±5V	AGND	V_{IN}	CAP	13.3kΩ
±3.33	V_{IN}	V_{IN}	CAP	10.7kΩ
0V to 10V	AGND	V_{IN}	AGND	13.3kΩ
0V to 5V	AGND	AGND	V_{IN}	10.0kΩ
0V to 4V	V_{IN}	AGND	V_{IN}	10.7kΩ

TABLE I. Input Range Connections. See Figure 4 for complete information.

SYMBOL	DESCRIPTION	MIN	TYP	MAX	UNITS
t_1	Convert Pulse Width	40		4500	ns
t_2	$\overline{BUSY}$ Delay			65	ns
t_3	$\overline{BUSY}$ LOW			8	µs
t_4	$\overline{BUSY}$ Delay after End of Conversion		220		ns
t_5	Aperture Delay		40		ns
t_6	Conversion Time		5.7	8	µs
t_7	Acquisition Time			2	µs
$t_6 + t_7$	Throughput Time		9	10	µs
t_8	R/$\overline{C}$ LOW to DATACLK Delay		450		ns
t_9	DATACLK Period		440		ns
t_{10}	Data Valid to DATACLK HIGH Delay	20	75		ns
t_{11}	Data Valid after DATACLK LOW Delay	100	125		ns
t_{12}	External DATACLK Period	100			ns
t_{13}	External DATACLK HIGH	20			ns
t_{14}	External DATACLK LOW	30			ns
t_{15}	DATACLK HIGH Setup Time	20		t_{12} + 5	ns
t_{16}	R/$\overline{C}$ to $\overline{CS}$ Setup Time	10			ns
t_{17}	SYNC Delay After DATACLK HIGH	15		35	ns
t_{18}	Data Valid Delay	25		55	ns
t_{19}	$\overline{CS}$ to Rising Edge Delay	25			ns
t_{20}	Data Available after $\overline{CS}$ LOW	4.5			µs

TABLE II. Conversion and Data Timing T_A = –40°C to +85°C.

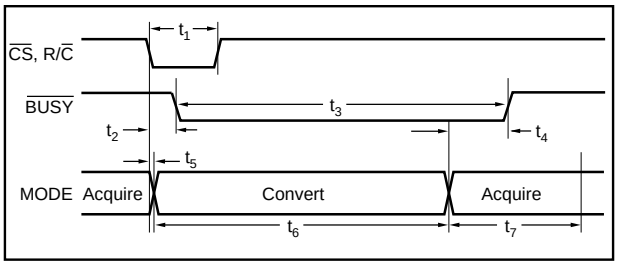

FIGURE 1. Basic Conversion Timing.

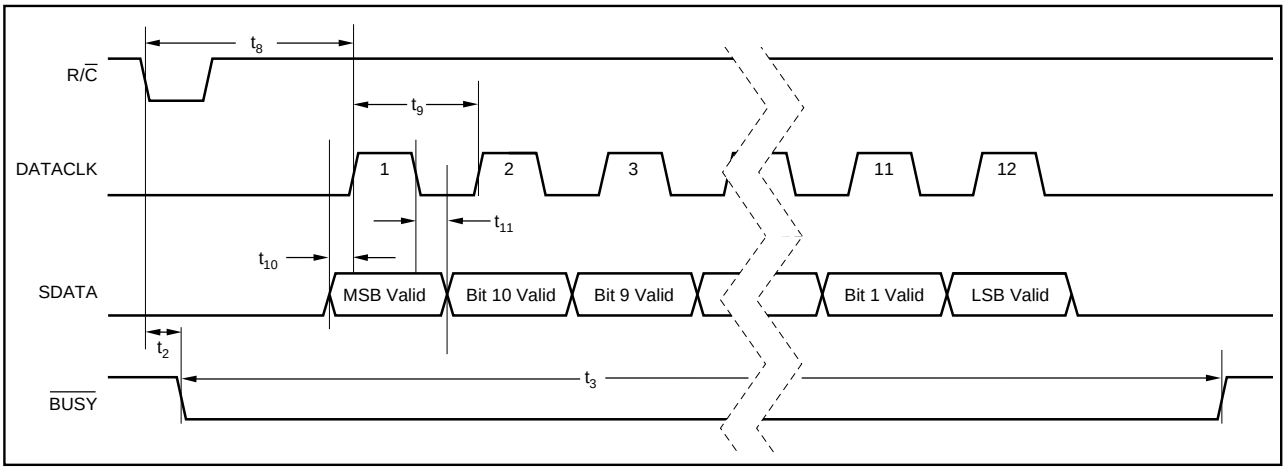

FIGURE 2. Serial Data Timing Using Internal Clock. ($\overline{CS}$, EXT/$\overline{INT}$ and TAG Tied LOW.)

SPECIFIC FUNCTION	$\overline{CS}$	R/$\overline{C}$	$\overline{BUSY}$	EXT/$\overline{INT}$	DATACLK	PWRD	SB/$\overline{BTC}$	OPERATION
Initiate Conversion and Output Data Using Internal Clock	1>0	0	1	0	Output	0	x	Initiates conversion “n”. Data from conversion “n–1” clocked out on DATA synchronized to 12 clock pulses output on DATACLK.
	0	1>0	1	0	Output	0	x	Initiates conversion “n”. Data from conversion “n–1” clocked out on DATA synchronized to 12 clock pulses output on DATACLK.
Initiate Conversion and Output Data Using External Clock	1>0	0	1	1	Input	0	x	Initiates conversion “n”.
	0	1>0	1	1	Input	0	x	Initiates conversion “n”.
	1>0	1	1	1	Input	x	x	Outputs a pulse on SYNC followed by data from conversion “n” clocked out synchronized to external DATACLK.
	1>0	1	0	1	Input	0	x	Outputs a pulse on SYNC followed by data from conversion “n–1” clocked out synchronized to external DATACLK.(1) Conversion “n” in process.
	0	0>1	0	1	Input	0	x	Outputs a pulse on SYNC followed by data from conversion “n–1” clocked out synchronized to external DATACLK .(1) Conversion “n” in process.
Incorrect Conversions	0	0	0>1	x	x	0	x	$\overline{CS}$ or R/$\overline{C}$ must be HIGH or a new conversion will be initiated without time for acquisition.
Power Down	x	x	x	x	x	0	x	Analog circuitry powered. Conversion can proceed.
	x	x	x	x	x	1	x	Analog circuitry disabled. Data from previous conversion maintained in output registers.
Selecting Output Format	x	x	x	x	x	x	0	Serial data is output in Binary Two’s Complement format.
	x	x	x	x	x	x	1	Serial data is output in Straight Binary format.

NOTE: (1) See Figure 3b for constraints on previous data valid during conversion.

Table III. Control Truth Table.

DESCRIPTION	ANALOG INPUT						DIGITAL OUTPUT			
							BINARY TWO’S COMPLEMENT (SB/$\overline{BTC}$ LOW)		STRAIGHT BINARY (SB/$\overline{BTC}$ HIGH)	
							HEX BINARY CODE	CODE	HEX BINARY CODE	CODE
Full-Scale Range	±10	±5	±3.33V	0V to 5V	0V to 10V	0V to 4V				
Least Significant Bit (LSB)	4.88mV	2.44mV	1.63mV	1.22mV	2.44mV	0.98mV				
+Full Scale (FS – 1LSB)	9.99512V	4.99756V	3.33171V	4.99878V	9.99756V	3.99902V	0111 1111 1111	7FF	1111 1111 1111	FFF
Midscale	0V	0V	0V	2.5V	5V	2V	0000 0000 0000	000	1000 0000 0000	800
One LSB Below Midscale	–4.88mV	–2.44mV	–1.63mV	2.49878V	4.99756V	1.99902V	1111 1111 1111	FFF	0111 1111 1111	7FF
–Full Scale	–10V	–5V	–3.333333V	0V	0V	0V	1000 0000 0000	800	0000 0000 0000	000

Table IV. Output Codes and Ideal Input Voltages.

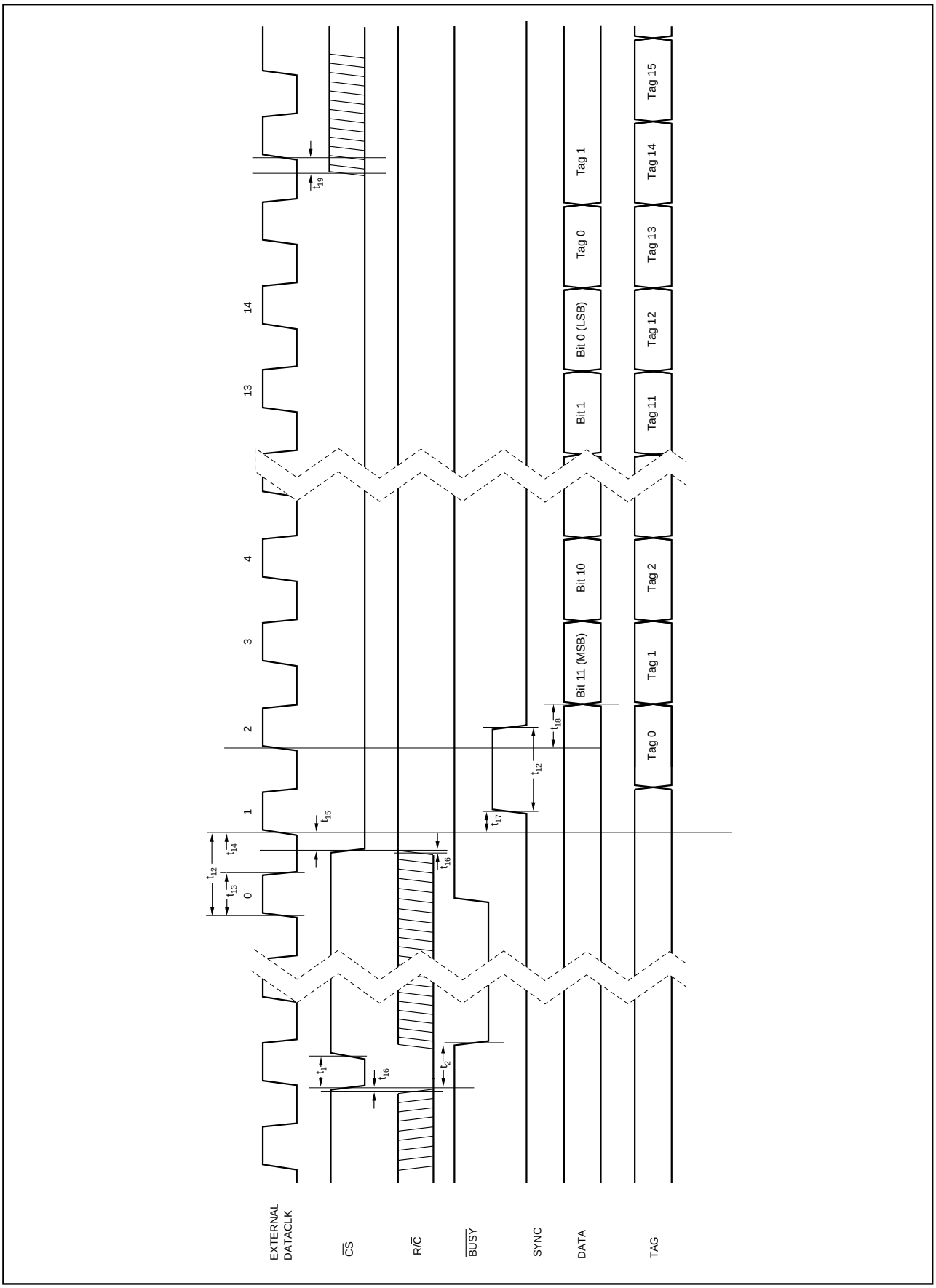

FIGURE 3a. Conversion and Read Timing with External Clock. (EXT/$\overline{\text{INT}}$ Tied HIGH). Read After Conversion.

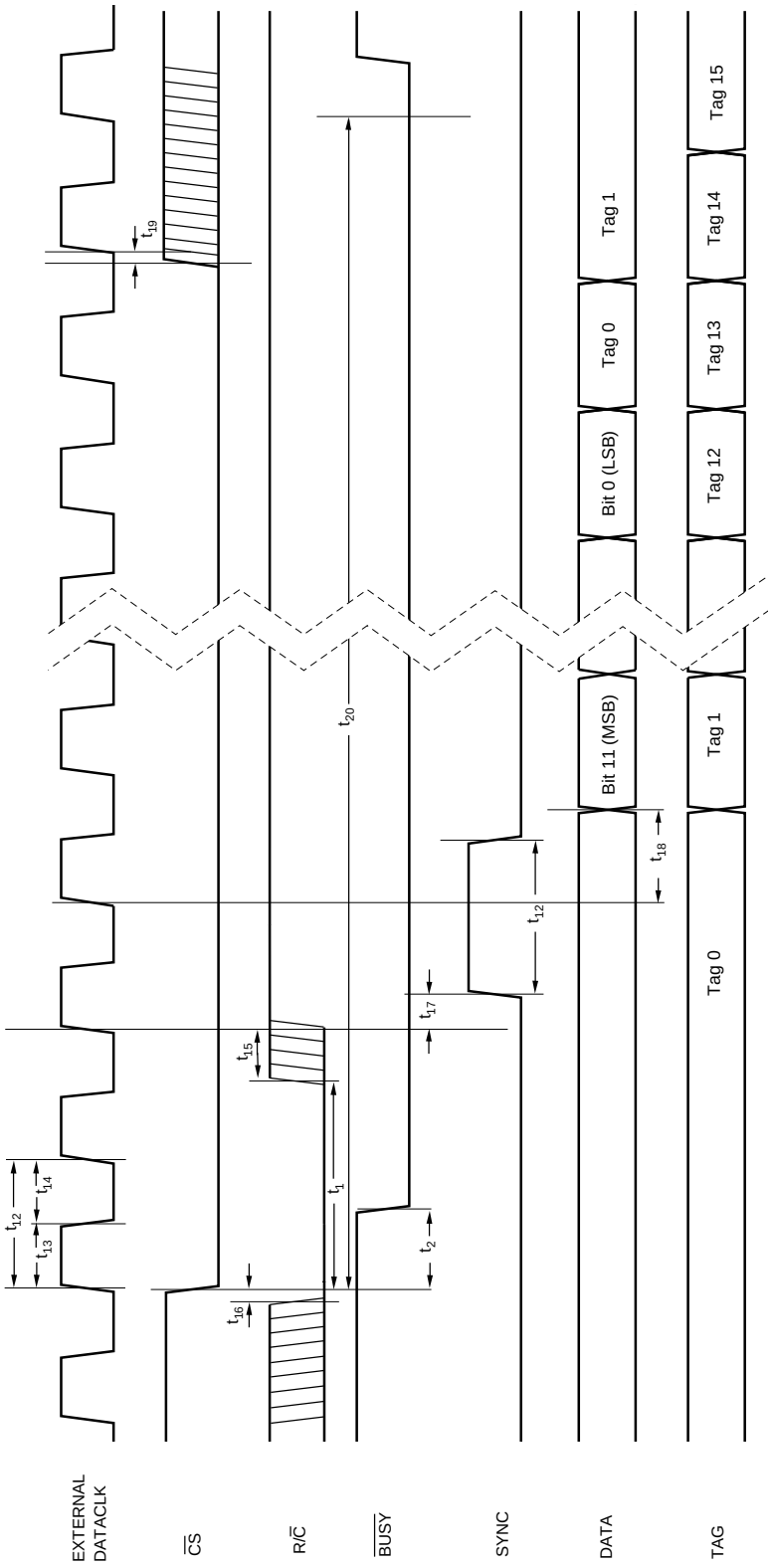

FIGURE 3b. Conversion and Read Timing with External Clock. (EXT/$\overline{\text{INT}}$ Tied HIGH.) Read During Conversion (Previous Conversion Results).

Input Range	Without Trim	With Trim (Adjust offset first at 0V, then adjust gain)
0V – 10V	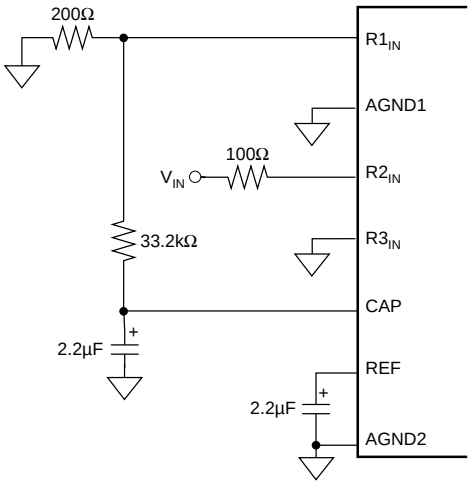	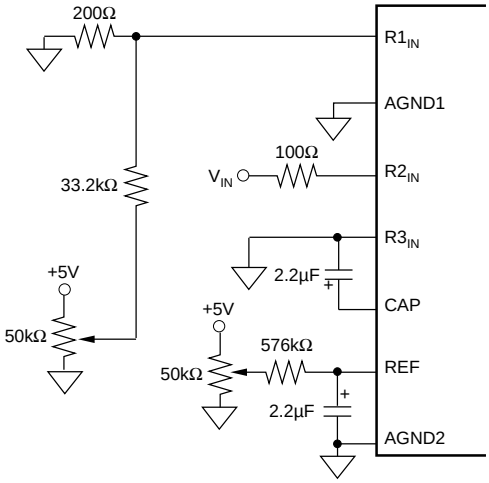
0V – 5V	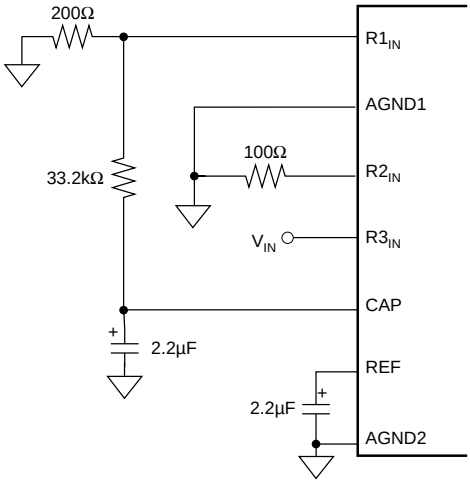	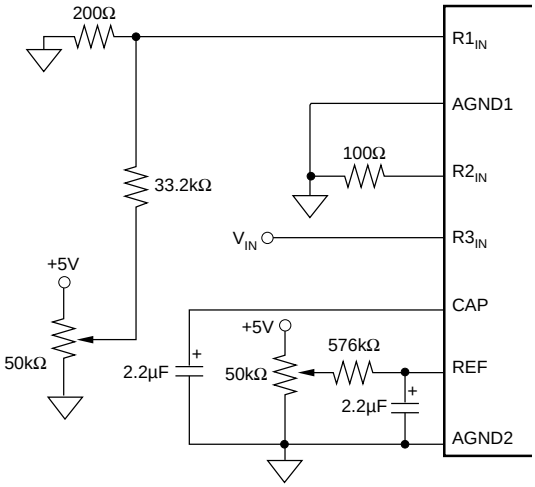
0V – 4V	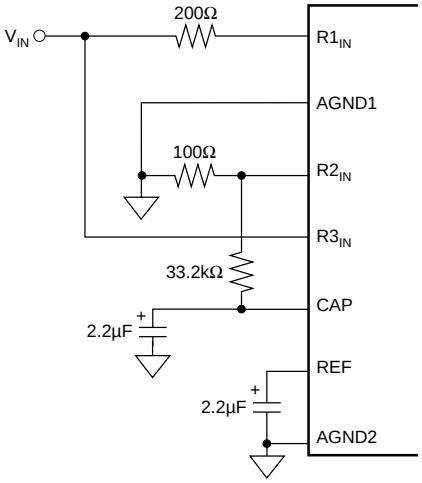	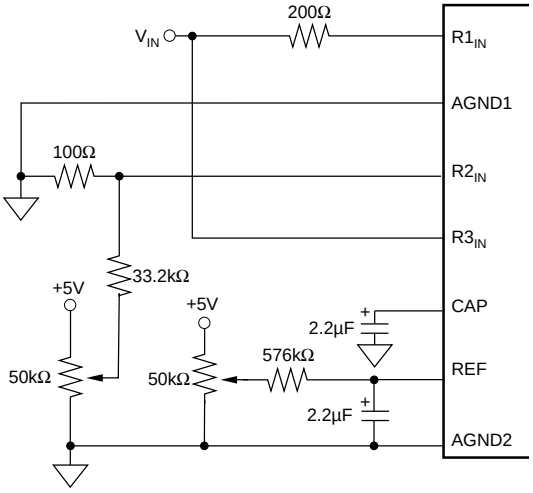

FIGURE 4a. Offset/Gain Circuits for Unipolar Input Ranges.

Input Range	Without Trim	With Trim (Adjust offset first at 0V, then adjust gain)
±10V	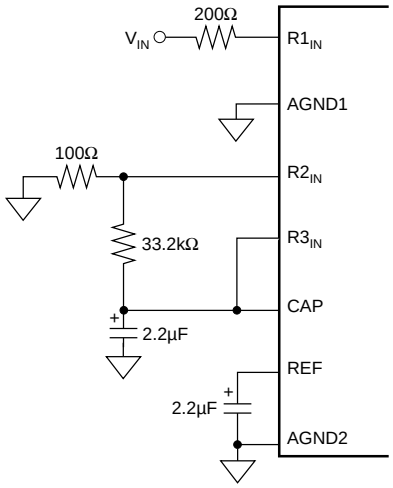	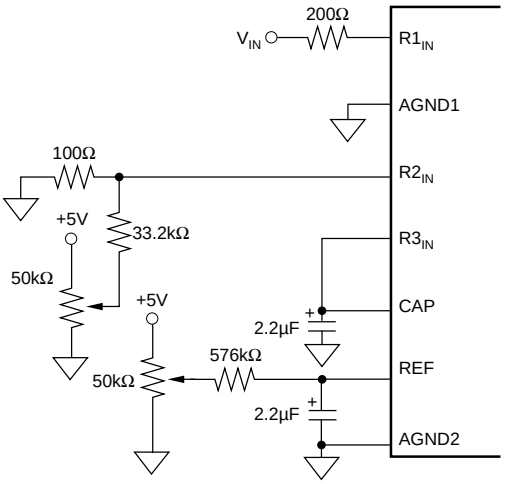
±5V	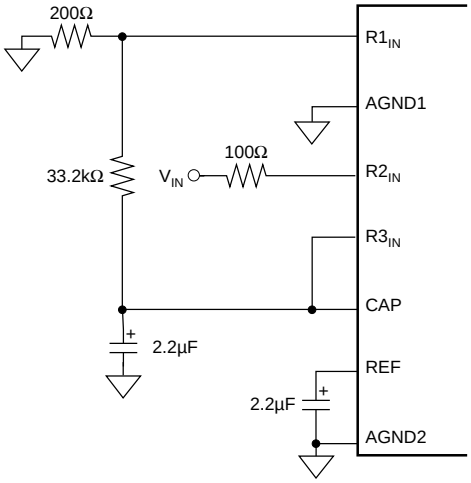	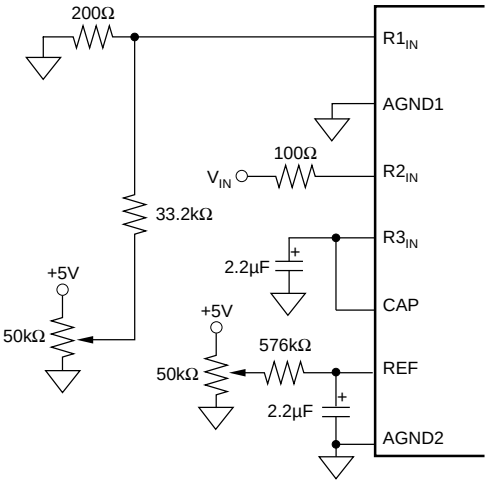
±3.33V	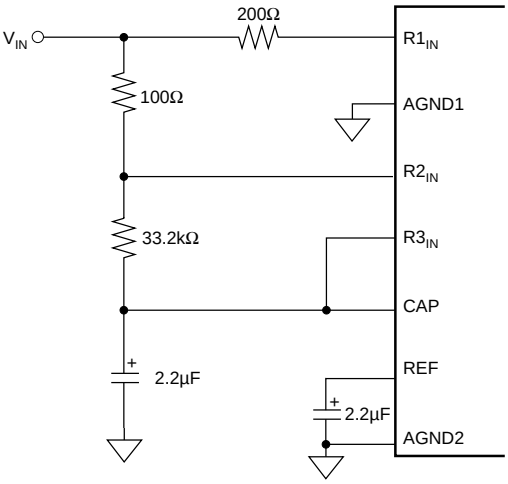	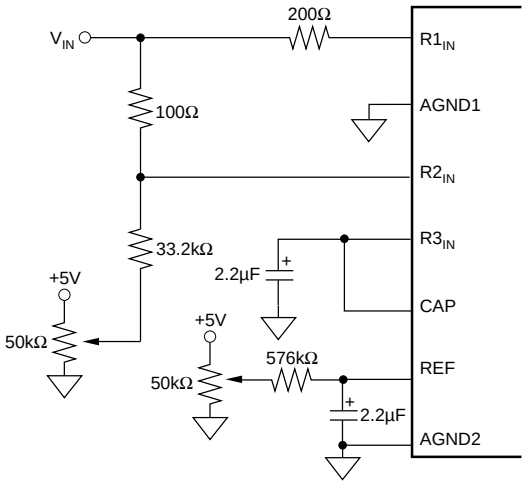

FIGURE 4b. Offset/Gain Circuits for Bipolar Input Ranges.