2SK3990-01L,S,SJ

FUJI POWER MOSFET

Fuji Electric

200511

Super FAP-G Series

N-CHANNEL SILICON POWER MOSFET

Features

- High speed switching
- Low on-resistance
- No secondary breadown
- Low driving power
- Avalanche-proof

Applications

- Switching regulators
- DC-DC converters
- UPS (Uninterruptible Power Supply)

Outline Drawings [mm]

See to P4

Equivalent circuit schematic

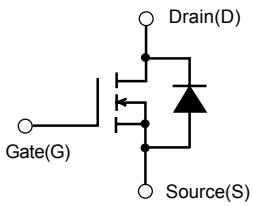

Maximum ratings and characteristicAbsolute maximum ratings

● (Tc=25°C unless otherwise specified)

Item	Symbol	Ratings	Unit	Remarks
Drain-source voltage	V_{DS}	600	V	
	V_{DSX}	600	V	VGS=-30V
Continuous drain current	I_D	3.0	A	
Pulsed drain current	$I_{D(puls)}$	±12.0	A	
Gate-source voltage	V_{GS}	±30	V	
Repetitive or non-repetitive	I_{AR}	3.0	A	Note *1
Non-repetitive Maximum avalanche energy	E_{AS}	237.3	mJ	Note *2
Repetitive Maximum avalanche energy	E_{AR}	6.0	mJ	Note *3
Maximum drain-source dV/dt	dV_{DS}/dt	20	kV/μs	VDS ≦600V
Peak diode recovery dV/dt	dV/dt	5	kV/μs	Note *4
Maximum power dissipation	P_D	60	W	Tc=25°C
		2.02	W	Ta=25°C
Operating and storage	T_{ch}	+150	°C	
temperature range	T_{stg}	-55 to +150	°C	

Note *1 Tch≦150°C
Note *2 Starting Tch=25°C, I_{AS}=1.2A, L=302mH, V_{CC}=60V, R_G=50Ω
E_{AS} limited by maximum channel temperrature and avalanche current.
See to 'Avalanche Energy' graph.
Note *3 Repetitve rating : Pulse width limited by maximum channel temperature.
See to 'Transient Thermal impedance' graph.
Note *4 I_F≦ -I_D, -di/dt=50A/μs, Vcc≦ BV_{DSS}, Tch ≦150°C

Electrical characteristics (T_c =25°C unless otherwise specified)

Item	Symbol	Test Conditions		Min.	Typ.	Max.	Units
Drain-source breakdown voltage	BV_{DSS}	I_D= 250μA V_{GS}=0V		600			V
Gate threshold voltage	$V_{GS(th)}$	I_D= 250μA V_{DS}=V_{GS}		3.0		5.0	V
Zero gate voltage drain current	I_{DSS}	V_{DS}=600V V_{GS}=0V	T_{ch}=25°C			25	μA
		V_{DS}=480V V_{GS}=0V	T_{ch}=125°C			250	
Gate-source leakage current	I_{GSS}	V_{GS}=±30V V_{DS}=0V				100	nA
Drain-source on-state resistance	$R_{DS(on)}$	I_D=1.5A V_{GS}=10V			2.64	3.3	Ω
Forward transcondutance	g_{fs}	I_D=1.5A V_{DS}=25V		1.5	3.0		S
Input capacitance	C_{iss}	V_{DS}=25V			330	500	pF
Output capacitance	C_{oss}	V_{GS}=0V			50	75	
Reverse transfer capacitance	C_{rss}	f=1MHz			2.5	5.0	
Turn-on time t_{on}	$t_{d(on)}$	V_{CC}=300V I_D=1.5A			11	18	ns
	t_r	V_{GS}=10V			5.0	7.5	
Turn-off time t_{off}	$t_{d(off)}$	R_{GS}=10 Ω			23	35	
	t_f				10	15	
Total Gate Charge	Q_G	V_{CC}=250V			13	20	nC
Gate-Source Charge	Q_{GS}	I_D=3.0A			5.5	8.5	
Gate-Drain Charge	Q_{GD}	V_{GS}=10V			2.8	4.2	
Diode forward on-voltage	V_{SD}	I_F=3.0A V_{GS}=0V T_{ch}=25°C			1.00	1.50	V
Reverse recovery time	trr	I_F=3.0A V_{GS}=0V			0.5		μs
Reverse recovery charge	Q_{rr}	-di/dt=100A/μs T_{ch}=25°C			2.3		μC

Thermalcharacteristics

Item	Symbol	Test Conditions	Min.	Typ.	Max.	Units
Thermal resistance	$R_{th(ch-c)}$	channel to case			2.083	°C/W
	$R_{th(ch-a)}$	channel to ambient			62.0	°C/W

Characteristics

Allowable Power Dissipation
PD=f(Tc)

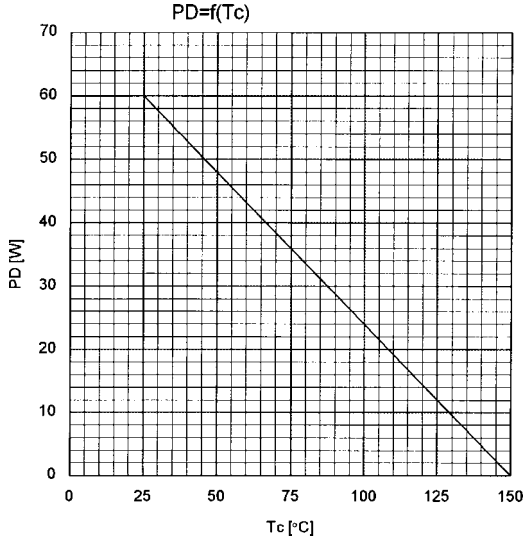

Typical Output Characteristics
ID=f(VDS):80 μs pulse test,Tch=25 °C

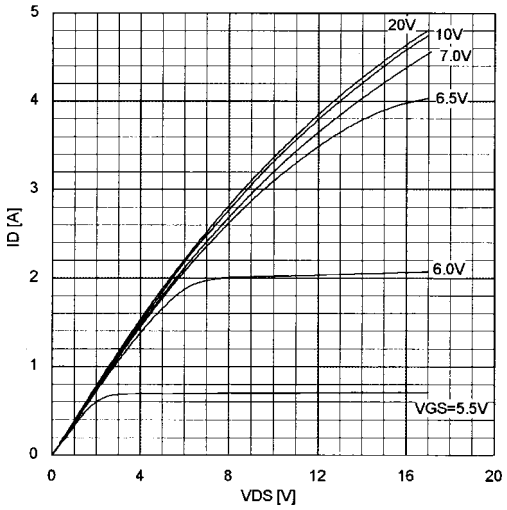

Typical Transfer Characteristic
ID=f(VGS):80 μs pulse test,VDS=25V,Tch=25 °C

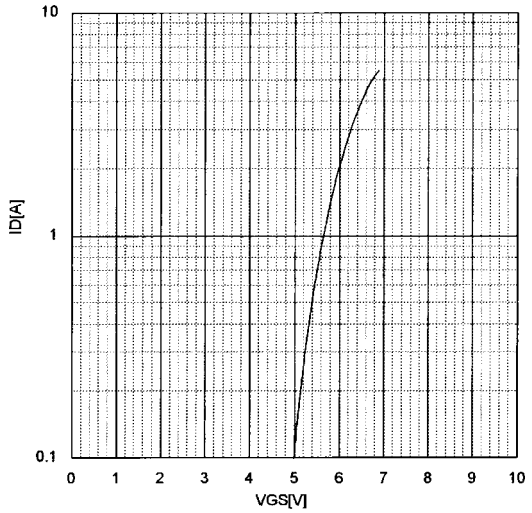

Typical Transconductance
gfs=f(ID):80 μs pulse test,VDS=25V,Tch=25 °C

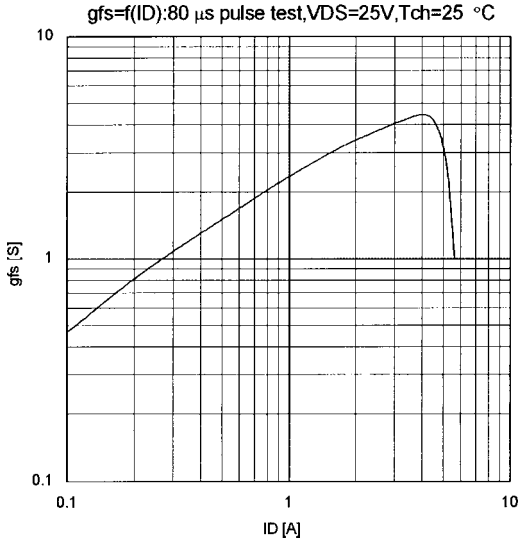

Typical Drain-Source on-state Resistance
RDS(on)=f(ID):80 μs pulse test,Tch=25 °C

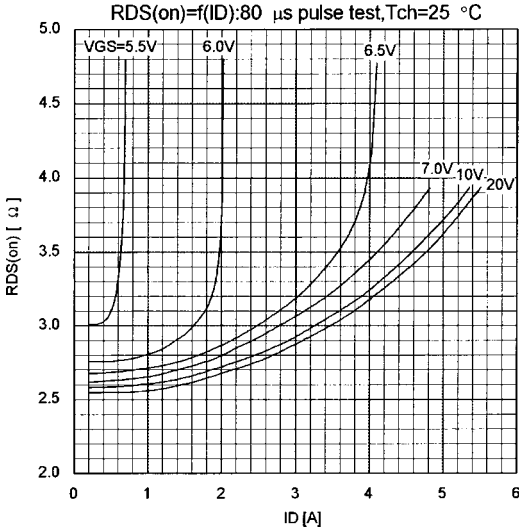

Drain-Source On-state Resistance
RDS(on)=f(Tch):ID=1.5A,VGS=10V

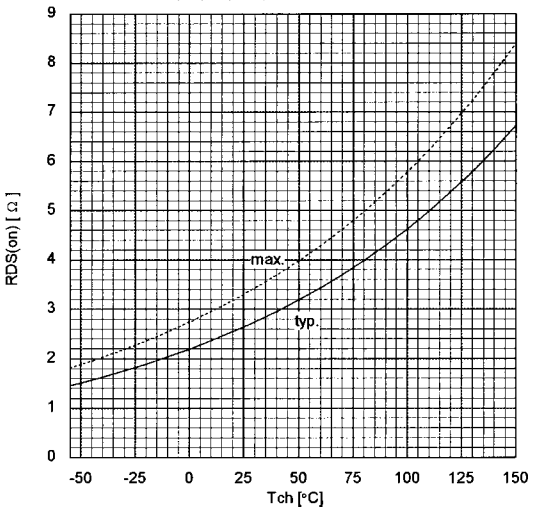

Gate Threshold Voltage vs. Tch
VGS(th)=f(Tch):VDS=VGS,ID=250μA

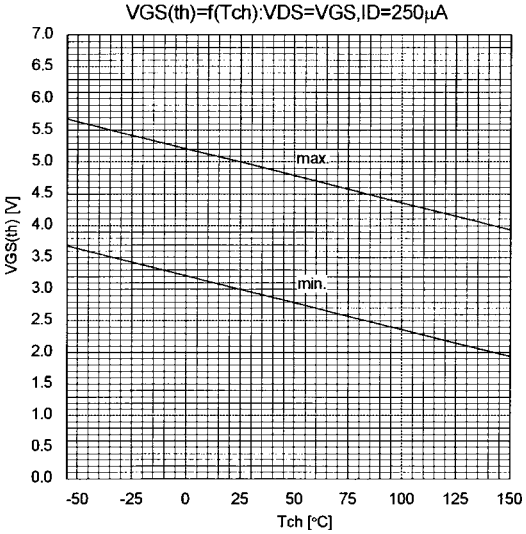

Typical Gate Charge Characteristics
VGS=f(Qg):ID=3.0A,Tch=25 °C

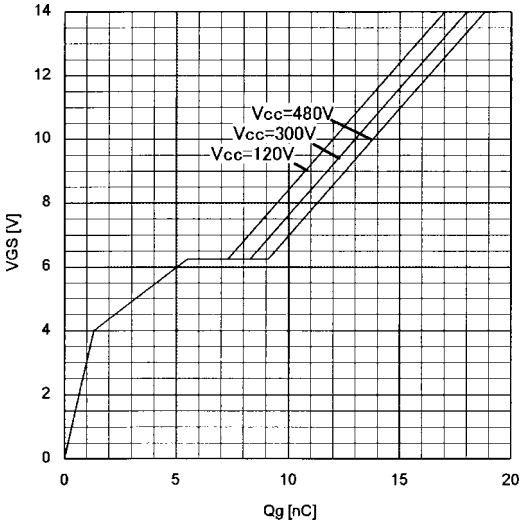

Typical Capacitance
C=f(VDS):VGS=0V,f=1MHz

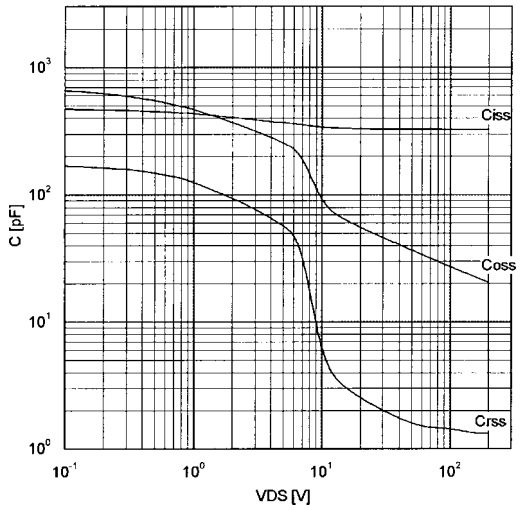

Typical Forward Characteristics of Reverse Diode
IF=f(VSD):80 μs pulse test,Tch=25 °C

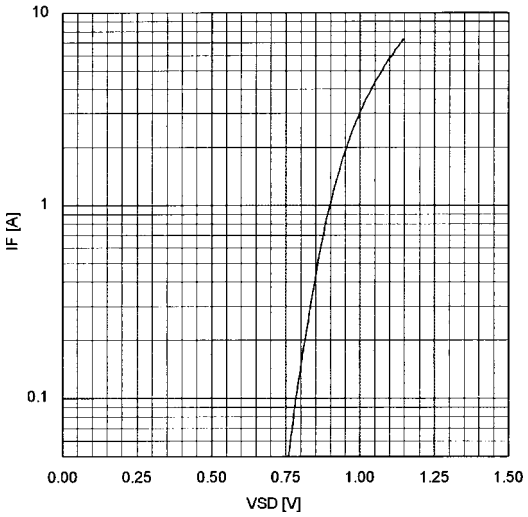

Typical Switching Characteristics vs. ID
t=f(ID):Vcc=300V,VGS=10V,RG=10Ω

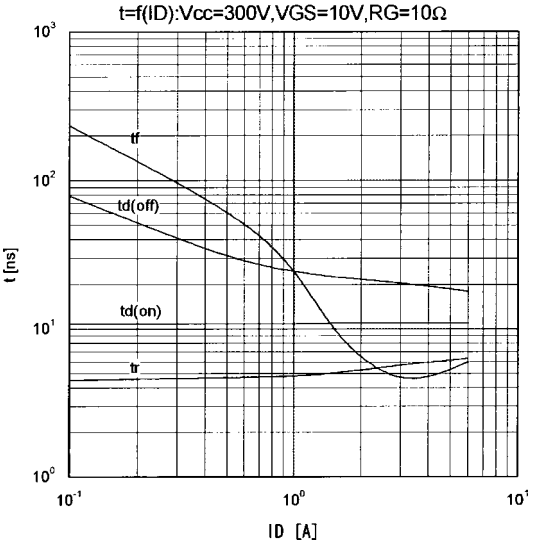

Maximum Avalanche Energy vs. starting Tch
E(AV)=f(starting Tch):Vcc=60V,I(AV)<=3.0A

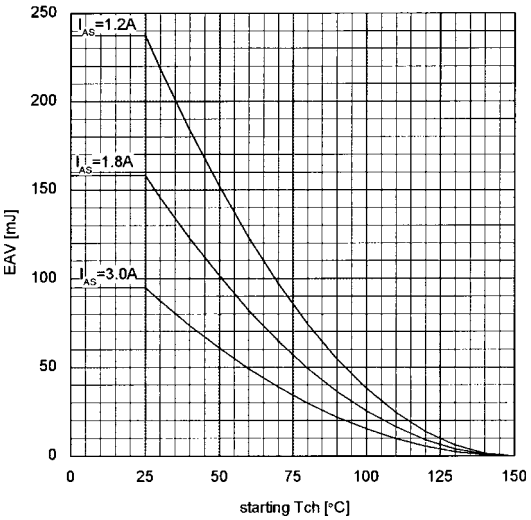

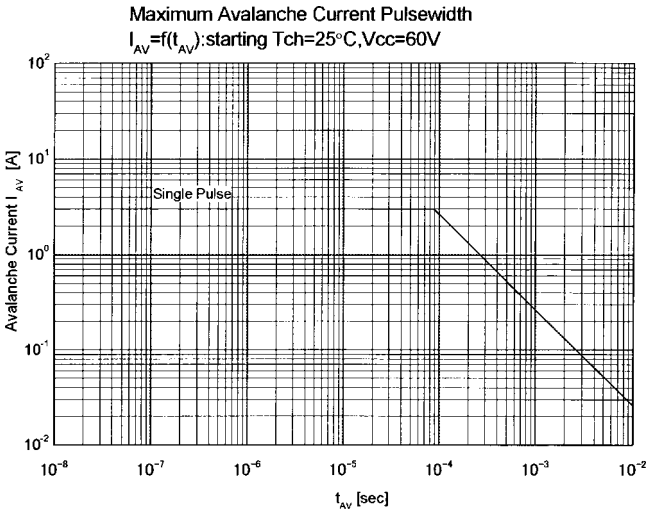

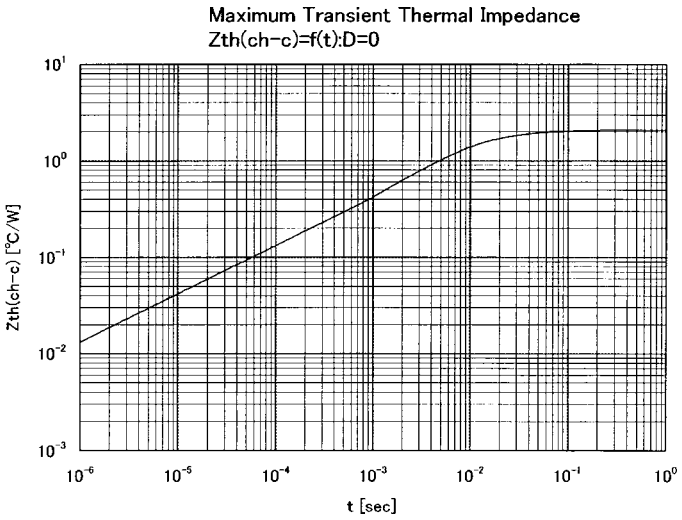

■ Outline Drawings [mm]

T-pack(L)

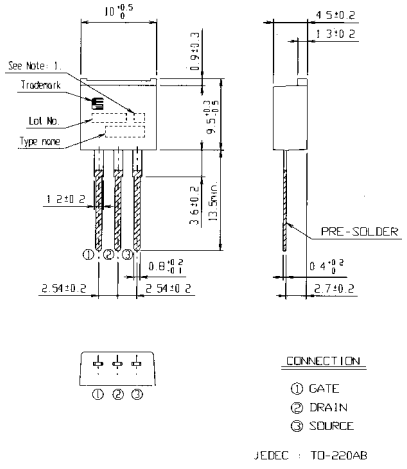

T-pack(S)

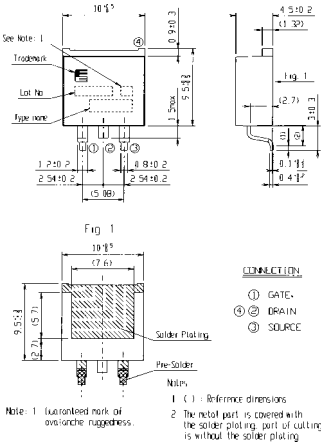
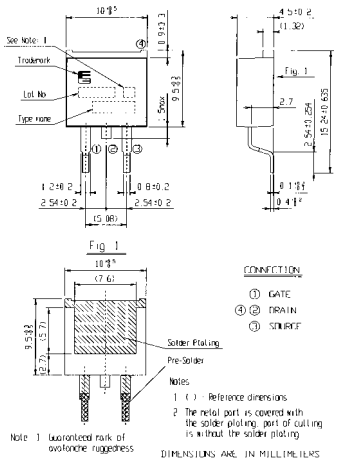
T-pack(SJ) [D2-pack]