TOSHIBA CMOS DIGITAL INTEGRATED CIRCUIT SILICON MONOLITHIC

TC4049BP, TC4049BF, TC4049BFN
TC4050BP, TC4050BF, TC4050BFN

TC4049B HEX BUFFER / CONVERTER (Inverting Type)
TC4050B HEX BUFFER / CONVERTER (Non – Inverting Type)

(Note) The JEDEC SOP (FN) is not available in Japan.

TC4049B, TC4050B contain six circuits of buffers. TC4049B is inverter type and TC4050B is non-inverter type.
Since one TTL or DTL can be directly driven having large output current, these are useful for interfacing from CMOS to TTL or DTL. As voltage up to $V_{SS}+18$ volts can be applied to the input regardless of V_{DD}, these can be also used as the level converter IC's which converts CMOS logical circuits of 15 volts or 10 volts system to CMOS / TTL logical circuits of 5 volts system.
Ideal switching characteristic has been obtained by the circuit diagram of three stage inverters for TC4049B and two stage inverters for TC4050B.

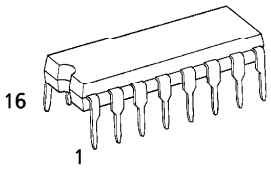

P (DIP16-P-300-2.54A)
Weight : 1.00g (Typ.)

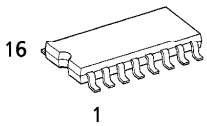

F (SOP16-P-300-1.27)
Weight : 0.18g (Typ.)

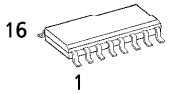

FN (SOL16-P-150-1.27)
Weight : 0.13g (Typ.)

MAXIMUM RATINGS

CHARACTERISTIC	SYMBOL	RATING	UNIT
DC Supply Voltage	V_{DD}	$V_{SS}-0.5 \sim V_{SS}+20$	V
Input Voltage	V_{IN}	$V_{SS}-0.5 \sim V_{SS}+20$	V
Output Voltage	V_{OUT}	$V_{SS}-0.5 \sim V_{DD}+0.5$	V
DC Input Current	I_{IN}	± 10	mA
Power Dissipation	P_D	300 (DIP) / 180 (SOIC)	mW
Operating Temperature Range	T_{opr}	– 40~85	°C
Storage Temperature Range	T_{stg}	– 65~150	°C

PIN ASSIGNMENT

TC4049B

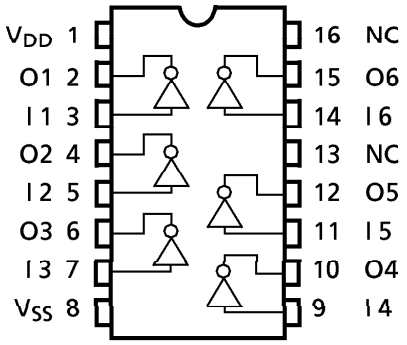

TC4050B

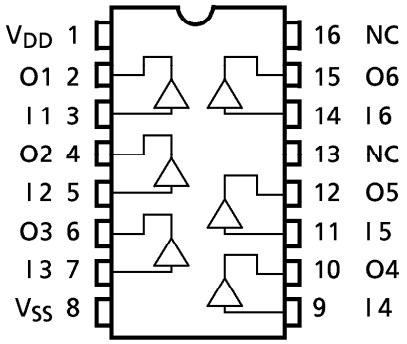

(TOP VIEW)

CIRCUIT DIAGRAM

1/6 TC4049B

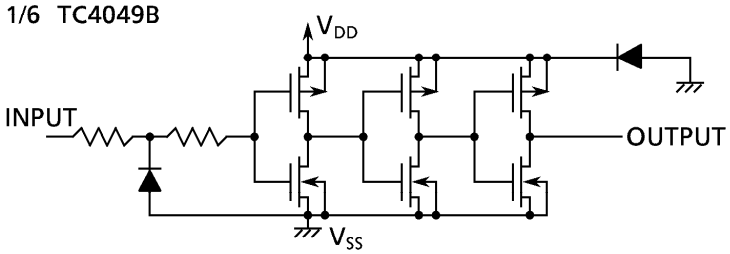

1/6 TC4050B

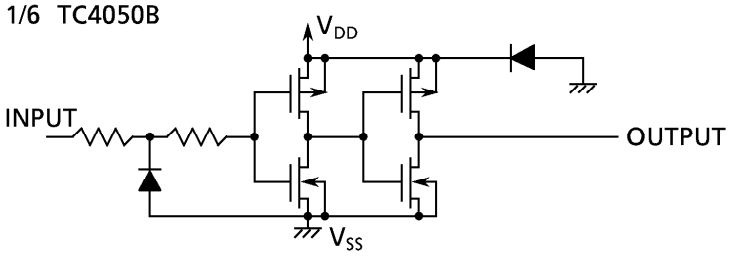

961001EBA2

● TOSHIBA is continually working to improve the quality and the reliability of its products. Nevertheless, semiconductor devices in general can malfunction or fail due to their inherent electrical sensitivity and vulnerability to physical stress. It is the responsibility of the buyer, when utilizing TOSHIBA products, to observe standards of safety, and to avoid situations in which a malfunction or failure of a TOSHIBA product could cause loss of human life, bodily injury or damage to property. In developing your designs, please ensure that TOSHIBA products are used within specified operating ranges as set forth in the most recent products specifications. Also, please keep in mind the precautions and conditions set forth in the TOSHIBA Semiconductor Reliability Handbook.

Downloaded from DatasheetLib.com - datasheet search engine

RECOMMENDED OPERATING CONDITIONS (V_{SS} = 0V)

CHARACTERISTIC	SYMBOL	TEST CONDITION	MIN.	TYP.	MAX.	UNIT
DC Supply Voltage	V_{DD}		3	—	18	V
Input Voltage	V_{IN}		0	—	18	V

STATIC ELECTRICAL CHARACTERISTICS (V_{SS} = 0V)

CHARACTERISTIC	SYMBOL	TEST CONDITION	V_{DD} (V)	−40°C MIN.	−40°C MAX.	25°C MIN.	25°C TYP.	25°C MAX.	85°C MIN.	85°C MAX.	UNIT
High-Level Output Voltage	V_{OH}	$\lvert I_{OUT} \rvert < 1\mu A$, $V_{IN} = V_{SS}, V_{DD}$	5	4.95	—	4.95	5.00	—	4.95	—	V
			10	9.95	—	9.95	10.00	—	9.95	—	
			15	14.95	—	14.95	15.00	—	14.95	—	
Low-Level Output Voltage	V_{OL}	$\lvert I_{OUT} \rvert < 1\mu A$, $V_{IN} = V_{SS}, V_{DD}$	5	—	0.05	—	0.00	0.05	—	0.05	
			10	—	0.05	—	0.00	0.05	—	0.05	
			15	—	0.05	—	0.00	0.05	—	0.05	
Output High Current	I_{OH}	V_{OH} = 4.6V, $V_{IN} = V_{SS}, V_{DD}$	5	−0.73	—	−0.65	−1.2	—	−0.58	—	mA
		V_{OH} = 2.5V, $V_{IN} = V_{SS}, V_{DD}$	5	−2.40	—	−2.10	−3.9	—	−1.90	—	
		V_{OH} = 9.5V, $V_{IN} = V_{SS}, V_{DD}$	10	−1.80	—	−1.65	−2.5	—	−1.35	—	
		V_{OH} = 13.5V, $V_{IN} = V_{SS}, V_{DD}$	15	−4.80	—	−4.30	−8.0	—	−3.50	—	
Output Low Current	I_{OL}	V_{OL} = 0.4V, $V_{IN} = V_{SS}, V_{DD}$	5	3.8	—	3.2	6.4	—	2.9	—	
		V_{OL} = 0.5V, $V_{IN} = V_{SS}, V_{DD}$	10	9.6	—	8.0	16.0	—	6.6	—	
		V_{OL} = 1.5V, $V_{IN} = V_{SS}, V_{DD}$	15	28.0	—	24.0	48.0	—	20.0	—	
Input High Voltage	V_{IH}	V_{OUT} = 0.5V, 4.5V, $\lvert I_{OUT} \rvert < 1\mu A$	5	3.5	—	3.5	2.75	—	3.5	—	V
		V_{OUT} = 1.0V, 9.0V, $\lvert I_{OUT} \rvert < 1\mu A$	10	7.0	—	7.0	5.50	—	7.0	—	
		V_{OUT} = 1.5V, 13.5V, $\lvert I_{OUT} \rvert < 1\mu A$	15	11.0	—	11.0	8.25	—	11.0	—	
Input Low Voltage	V_{IL}	V_{OUT} = 0.5V, 4.5V, $\lvert I_{OUT} \rvert < 1\mu A$	5	—	1.5	—	2.25	1.5	—	1.5	
		V_{OUT} = 1.0V, 9.0V, $\lvert I_{OUT} \rvert < 1\mu A$	10	—	3.0	—	4.50	3.0	—	3.0	
		V_{OUT} = 1.5V, 13.5V, $\lvert I_{OUT} \rvert < 1\mu A$	15	—	4.0	—	6.75	4.0	—	4.0	
Input Current "H" Level	I_{IH}	V_{IH} = 18V	18	—	0.1	—	10^{-5}	0.1	—	1.0	μA
Input Current "L" Level	I_{IL}	V_{IL} = 0V	18	—	−0.1	—	-10^{-5}	−0.1	—	−1.0	
Quiescent Supply Current	I_{DD}	$V_{IN} = V_{SS}, V_{DD}$ *	5	—	1	—	0.002	1	—	30	
			10	—	2	—	0.004	2	—	60	
			15	—	4	—	0.008	4	—	120	

* All valid input combinations.

961001EBA2'

- The products described in this document are subject to foreign exchange and foreign trade control laws.
- The information contained herein is presented only as a guide for the applications of our products. No responsibility is assumed by TOSHIBA CORPORATION for any infringements of intellectual property or other rights of the third parties which may result from its use. No license is granted by implication or otherwise under any intellectual property or other rights of TOSHIBA CORPORATION or others.
- The information contained herein is subject to change without notice.

Downloaded from DatasheetLib.com - datasheet search engine

DYNAMIC ELECTRICAL CHARACTERISTICS (Ta = 25°C, Vss = 0V, C_L = 50pF)

	CHARACTERISTIC	SYMBOL	TEST CONDITION	V_{DD}(V)	MIN.	TYP.	MAX.	UNIT
	Output Transition Time (Low to High)	t_{TLH}		5	—	60	160	ns
				10	—	30	80	
				15	—	25	60	
	Output Transition Time (High to Low)	t_{THL}		5	—	120	60	
				10	—	10	40	
				15	—	8	30	
TC4049B	Propagation Delay Time (Low to High)	t_{pLH}		5	—	60	120	ns
				10	—	35	65	
				15	—	30	50	
	Propagation Delay Time (High to Low)	t_{pHL}		5	—	40	60	
				10	—	20	30	
				15	—	15	20	
TC4050B	Propagation Delay Time (Low to High)	t_{pLH}		5	—	50	130	ns
				10	—	30	70	
				15	—	25	55	
	Propagation Delay Time (High to Low)	t_{pHL}		5	—	30	70	
				10	—	17	35	
				15	—	14	25	
	Input Capacitance	C_{IN}			—	5	7.5	pF

WAVEFORM FOR MEASUREMENT OF DYNAMIC CHARACTERISTICS

WAVEFORM

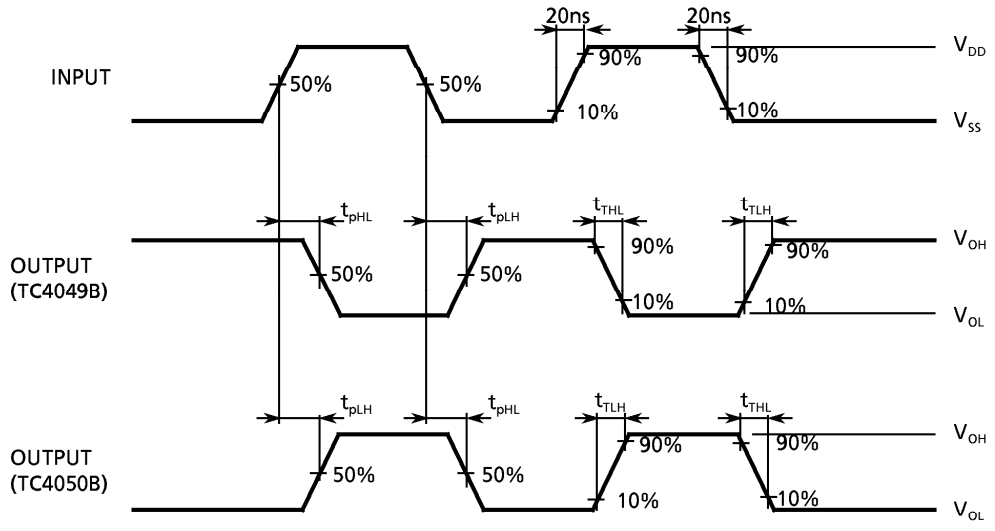

Downloaded from DatasheetLib.com - datasheet search engine

DIP 16PIN OUTLINE DRAWING (DIP16-P-300-2.54A) Unit in mm

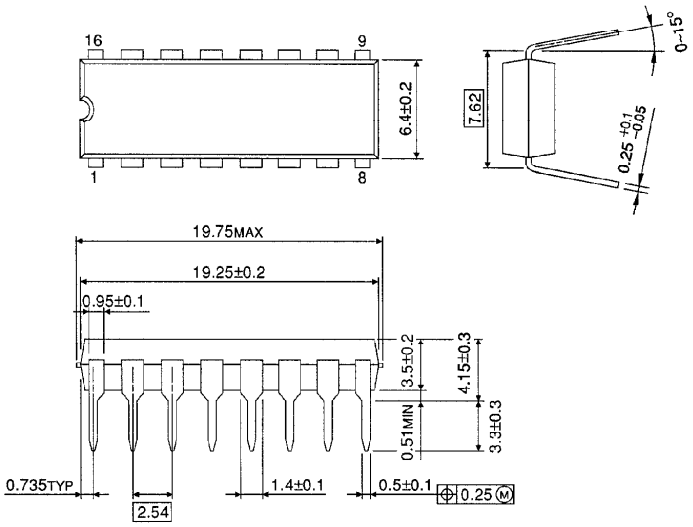

Weight : 1.00g (Typ.)

SOP 16PIN (200mil BODY) OUTLINE DRAWING (SOP16-P-300-1.27) Unit in mm

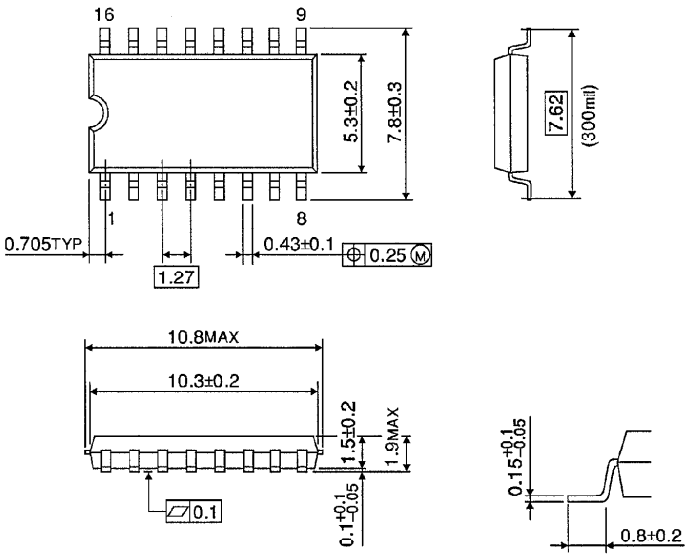

Weight : 0.18g (Typ.)

Downloaded from DatasheetLib.com - datasheet search engine

SOP 16PIN (150mil BODY) OUTLINE DRAWING (SOL16-P-150 -1.27) Unit in mm

(Note) This package is not available in Japan.

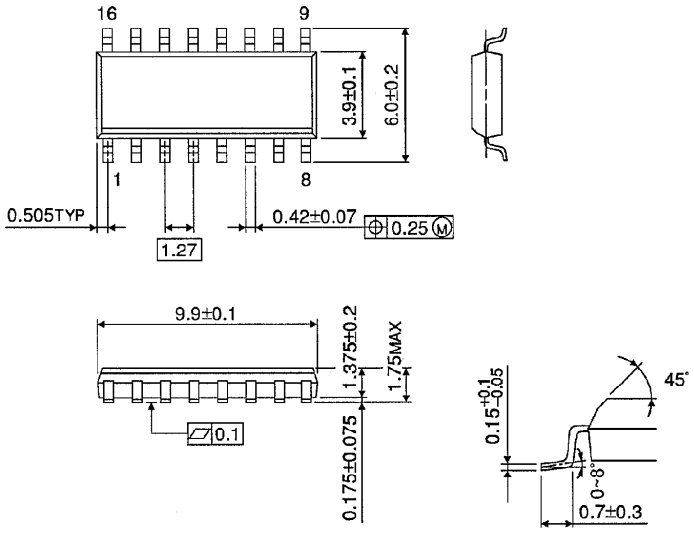

Weight : 0.13g (Typ.)

Downloaded from DatasheetLib.com - datasheet search engine