Question Answering Network for Physical Reasoning

Hojoon Lee, Suyeong An, Hyunseung Kim, Dooho Chang, Taewan Lim

0.0 Team Members & Roles

- Hojoon Lee, 2014190701

Command Center and Leader of Team.

- Suyeong An, 2017320179

Research and implement the question answering network (ATQAN).

- Hyunseung Kim, 2015410035

Research and implement the question answering network (THQAN).

- Dooho Chang, 2011210078

Research the way to improve the reasoning power.

- Taewan Lim, 2013190715

Analysis the environment and result with statistics.

0.1 PHYRE

Abstract

Understanding and reasoning about physics is an important ability of intelligent agents. PHYRE is a benchmark for physical reasoning that contains a set of simple classical mechanics puzzles in a 2D enviroment. The benchmark is designed to encourage development of sample-efficient learning algorithms that generalize well across puzzles.

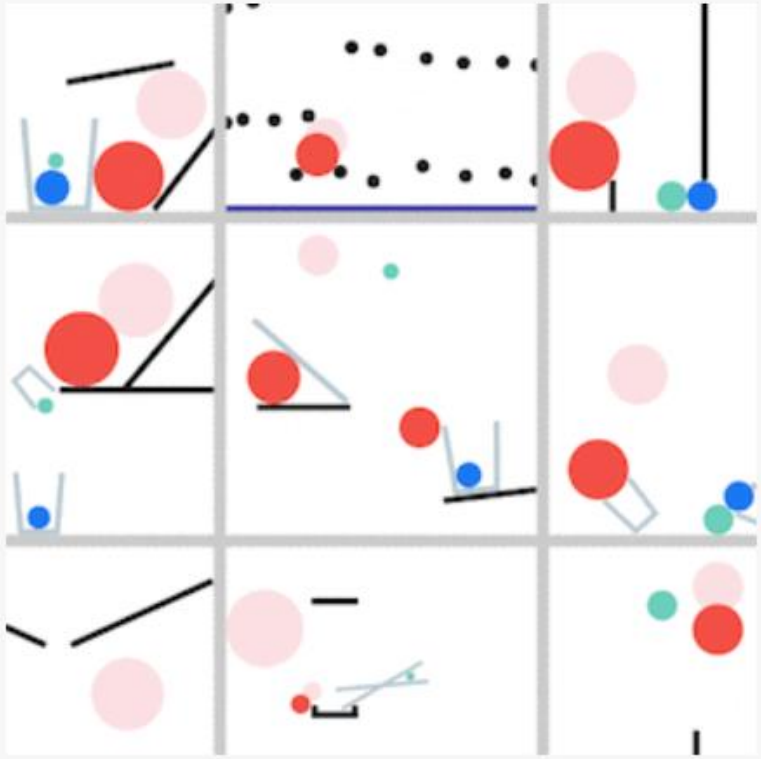

0.2 Problems Definition

- **Understand physical concepts**: Agent should understand physical concepts through question & answer module.
- **Obtain generalized model**: By understanding the physical concepts, agent's behavior should be more generalized.

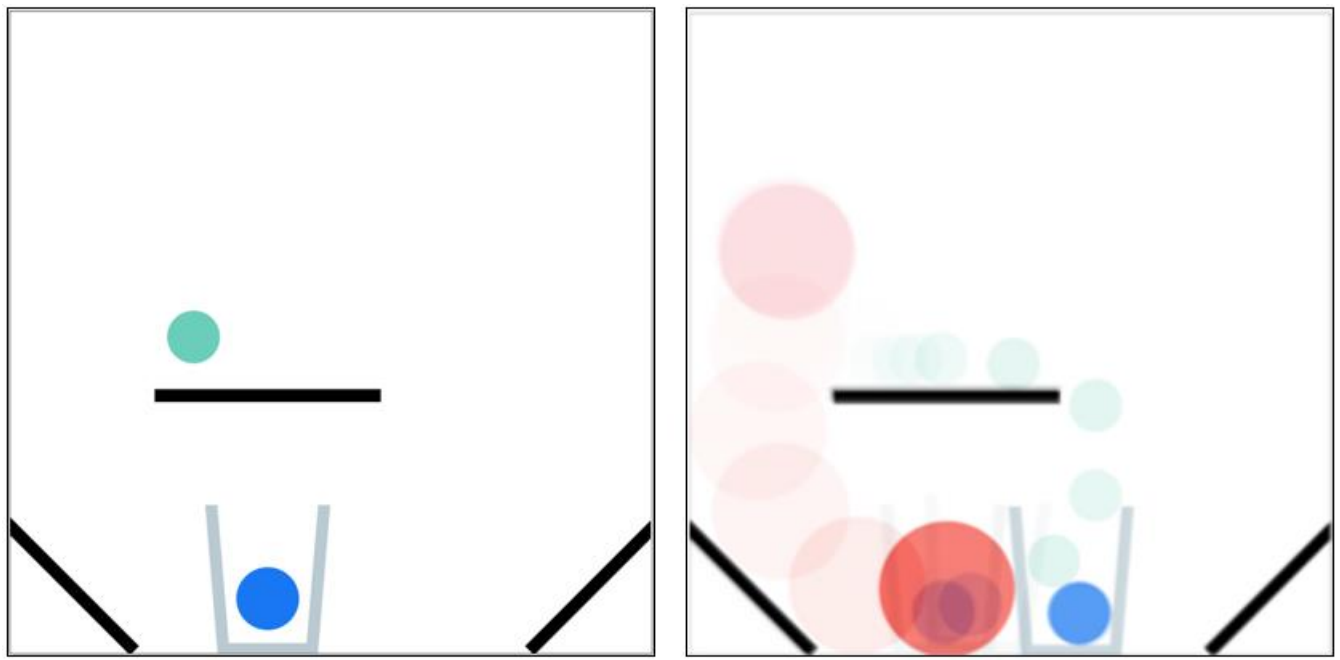

With considering about gravity, friction and mass, clear the game

1.0 Our Approach and Main Contribution

How can we make model physical reasoning?

- Visual Question Answering (VQA)

- Learning physical representations

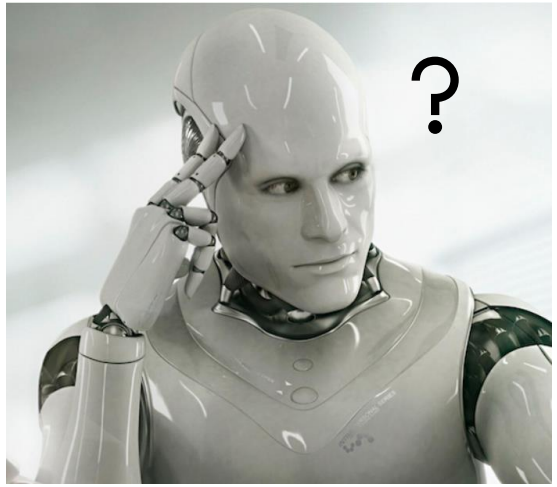

1.1 Our Model – THQAN

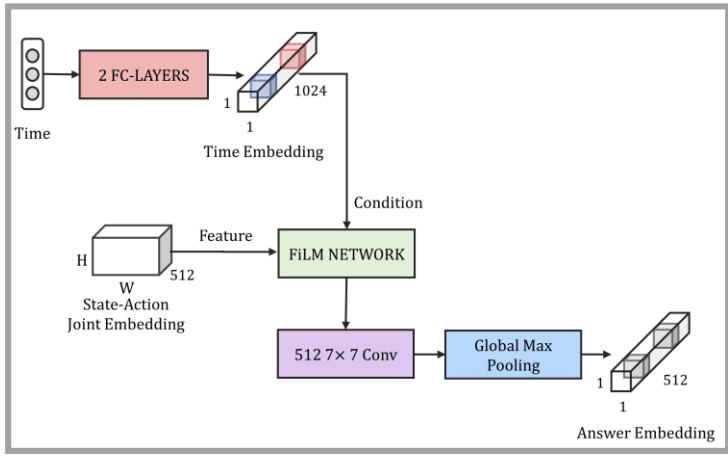

〈Question Answering Module〉

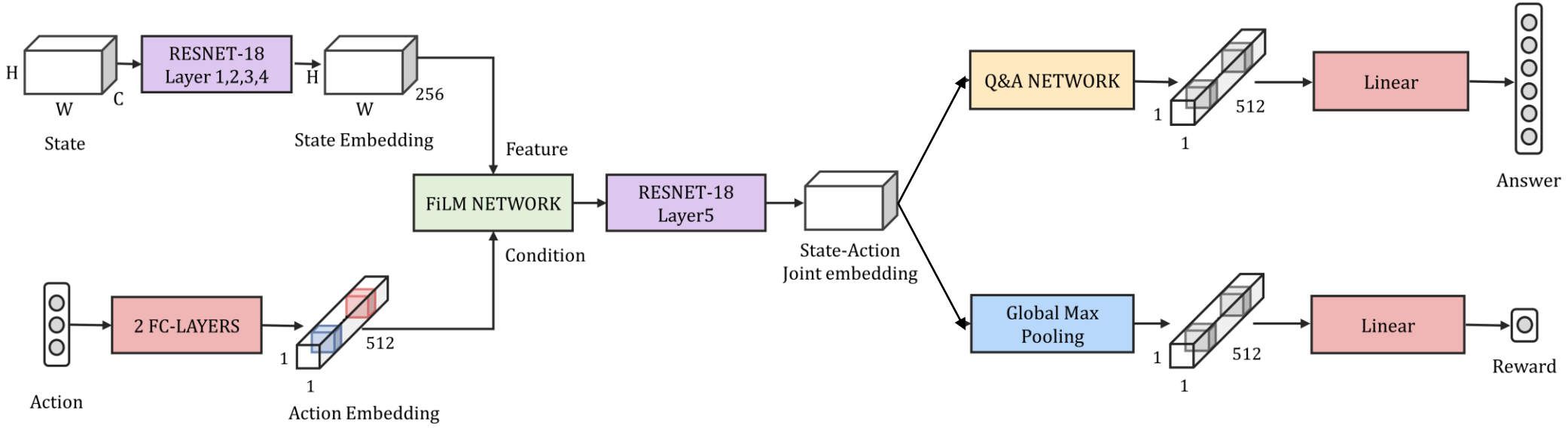

〈Two-Headed Question Answering Network〉

1.1 Our Model – ATQAN

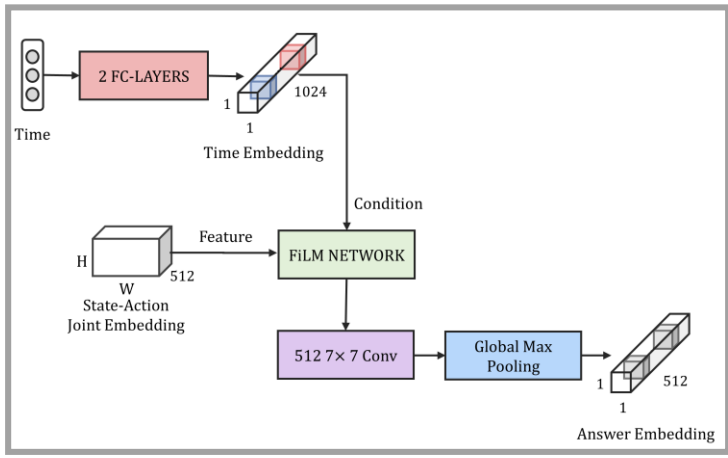

⟨Question Answering Module⟩

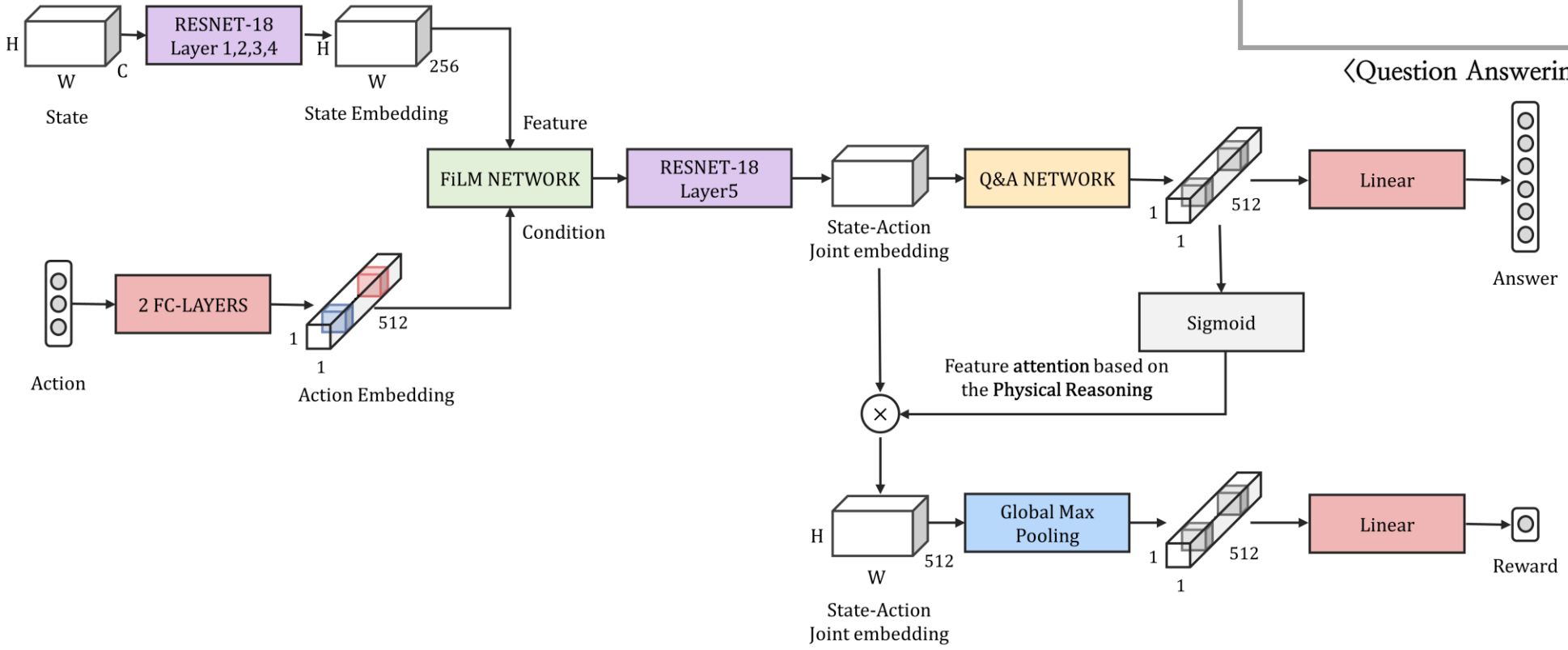

⟨Attention Question Answering Network⟩

1.2 Evaluation

Models	Cross	Within
DQN	36.8 ±9.7	77.6 ±1.1
THQAN	-	78.4
ATQAN	**39.0**	**80.2**

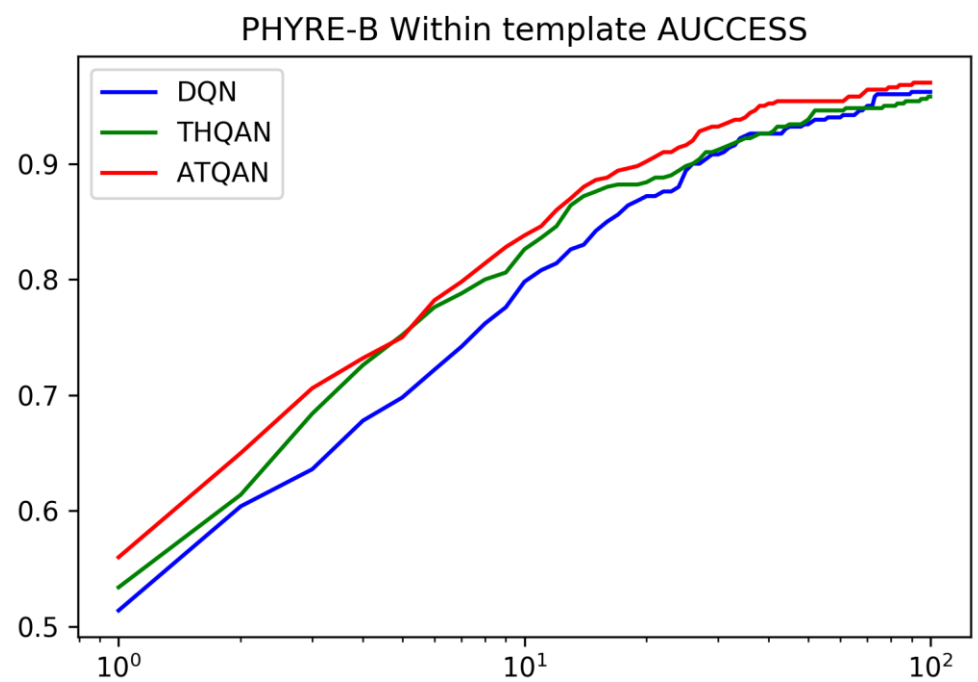

2.0 Future Work

• **Conserve the spatial information** ：The information of the locations of balls is considered as spatial thing. So, using the channel(spatial) wise FILM is regard as way worth a try.

• **Add more complexity for question embedding**：Current question is only bounded in the locations of balls. Then, the inpormation of the locations of balls was not enough to understand physical reason as human do.

Reference

Bakhtin, A., van der Maaten, L., Johnson, J., Gustafson, L., and Girshick, R. Phyre: A new benchmark for physical reasoning, 2019.

Bellemare, M. G., Dabney, W., and Munos, R. A distributional perspective on reinforcement learning. ICML, 2017.

He, K., Zhang, X., Ren, S., and Sun, J. Deep residual learning for image recognition. CVPR, 2016.

Iten, R., Metger, T., Wilming, H., del Rio, L., and Renner, R. Discovering physical concepts with neural networks, 2018.

Johnson, J., Hariharan, B., van der Maaten, L., Fei-Fei, L., Zitnick, C. L., and Girshick, R. Clevr: A diagnostic dataset for compositional language and elementary visual reasoning. CVPR, 2017.

Kingma, D. P. and Ba, J. Adam: A method for stochastic optimization. ICLR, 2015.

Loshchilov, I. and Hutter, F. Sgdr: Stochastic gradient descent with warm restarts. ICLR, 2017.

Lu, J., Yang, J., Batra, D., and Parikh, D. Hierarchical question-image co-attention for visual question answering. NIPS, 2016.

Mnih, V., Kavukcuoglu, K., Silver, D., Graves, A., Antonoglou, I., Wierstra, D., and Riedmiller, M. Playing atari with deep reinforcement learning. NIPS, 2013.

Mnih, V., Kavukcuoglu, K., Silver, D., Rusu, A. A., Veness, J., Bellemare, M. G., Graves, A., Riedmiller, M., Fidjeland, A. K., Ostrovski, G., Petersen, S., Beattie, C., Sadik, A., Antonoglou, I., King, H., Kumaran, D., Wierstra, D., and Hassabis, S. L. . D. Human-level control through deep reinforcement learning. Nature, 2015.

Perez, E., Strub, F., de Vries, H., Dumoulin, V., and Courville, A. Film: Visual reasoning with a general conditioning layer. AAAI, 2018.