2019.2H Machine Learning

Make StreetFighter II Champion Using Reinforcement Learning

TEAM 19

0.0 Team Members & Roles

- Hyunseung Kim, 2015410035

- Research and implement DQN, A2C, A2C3, Leader of Team.

- Shinhwan Kang, 2017320144

- Research and implement DQN.

- Sungdong Yoo, 2014190704

- Implement backpropagation.

- Habin Lee, 2015410059

- Implement backpropagation.

0.1 Environment

vs

Open AI gym - retro

0.2 Goal

1. Make AI defeats all other character in normal level.
2. Make AI to use command.

1.1 Basic RL Models

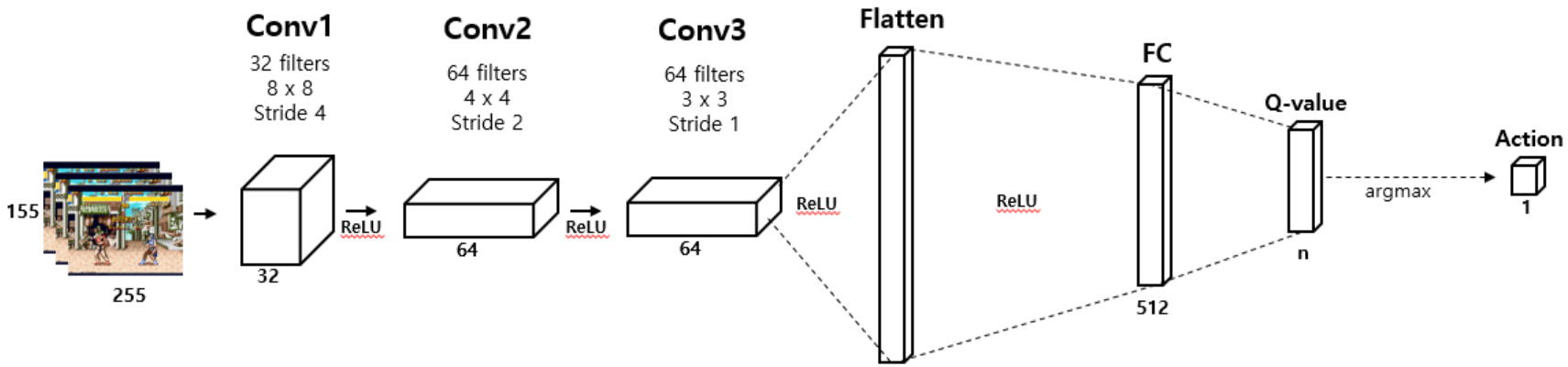

Deep Q Network (DQN)

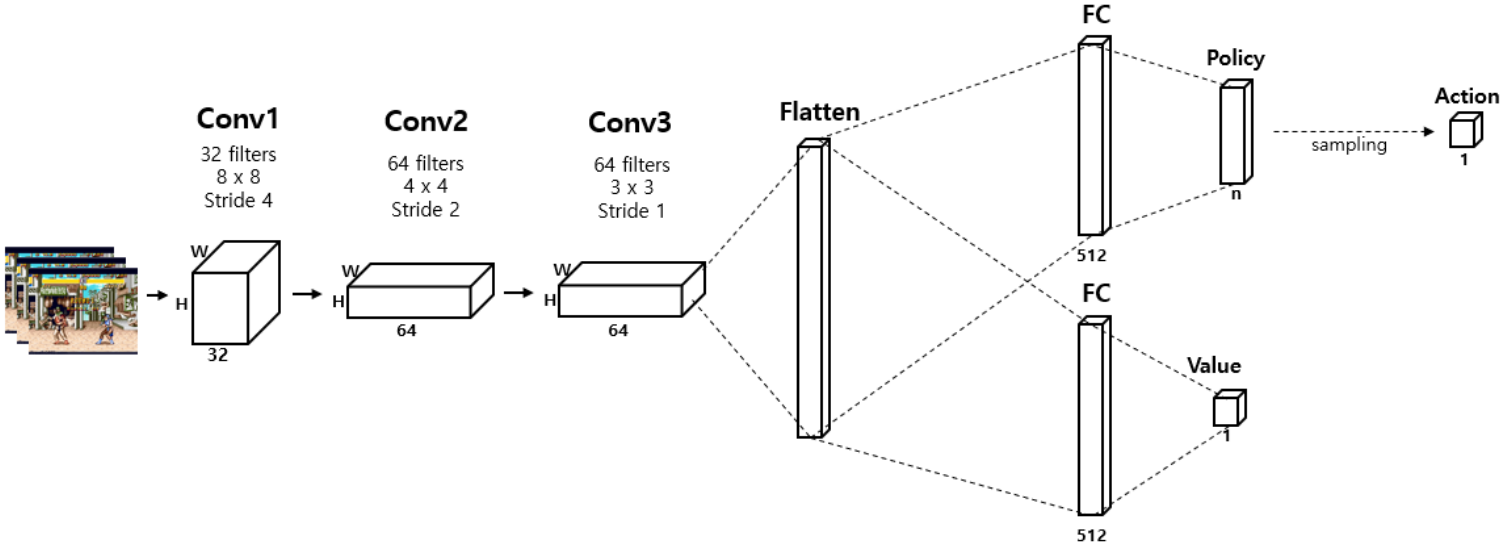

Advantage Actor Critic Method (A2C)

1.2 Defeat One Character

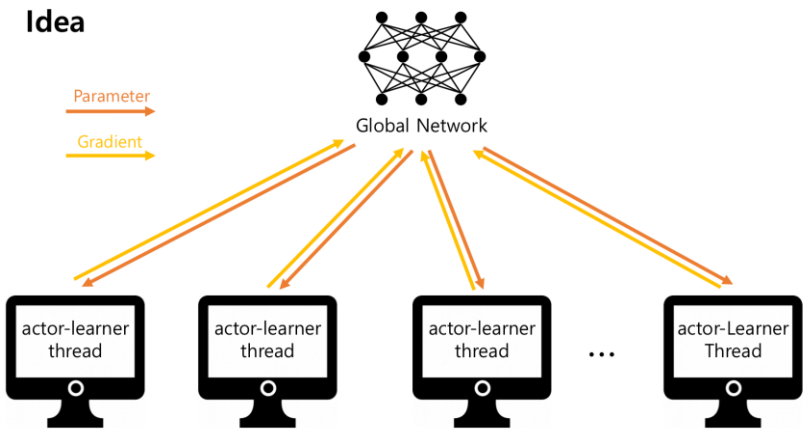

Use Advantage of A2C

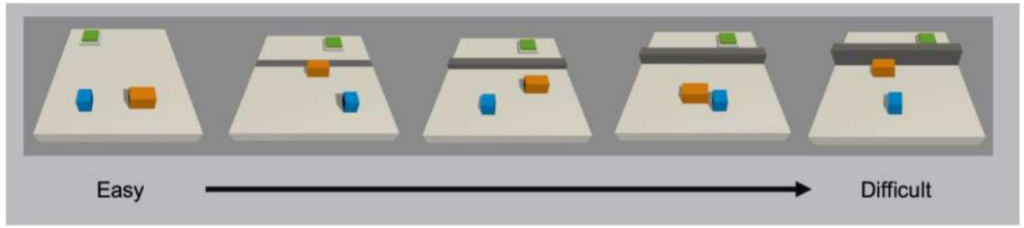

Curriculum Learning

Next Step? Generalize!

1.3 Our Model – A2C3

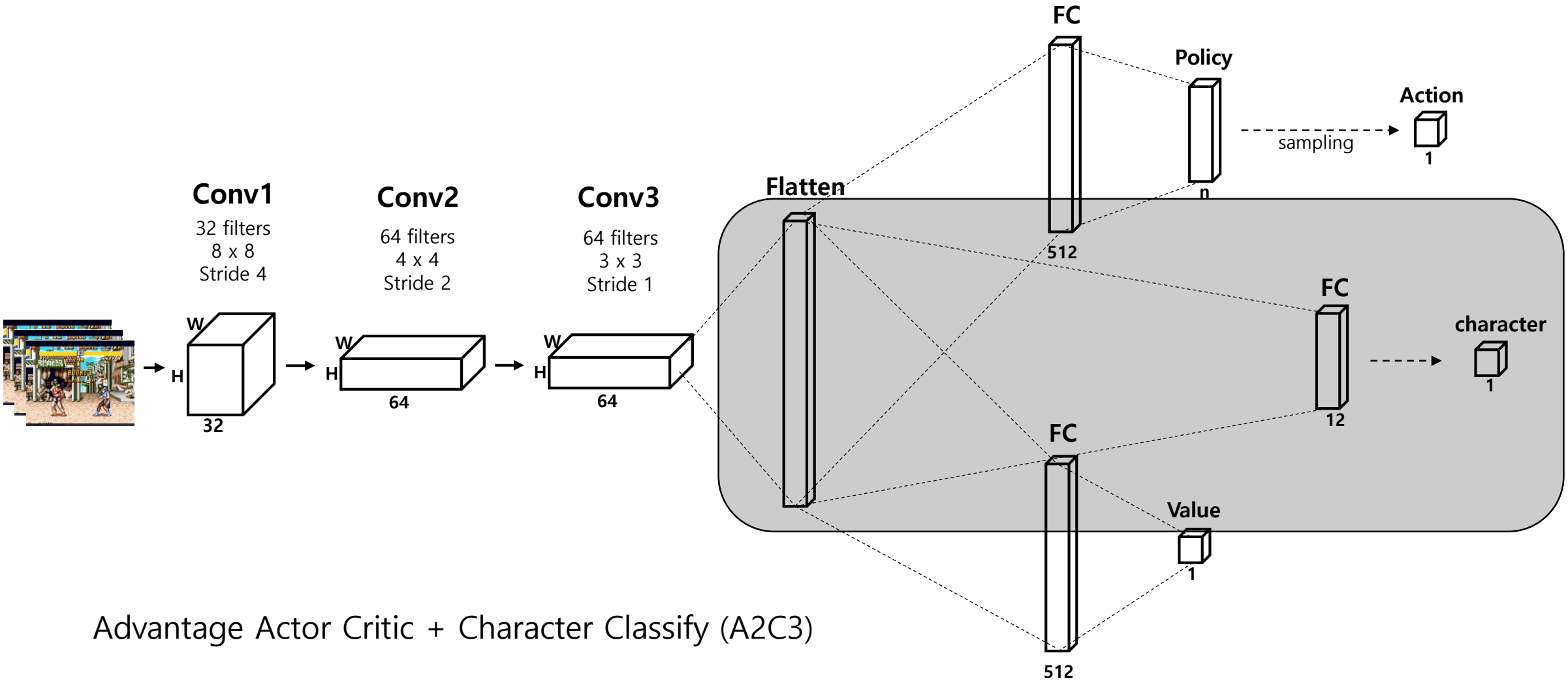

Advantage Actor Critic + Character Classify (A2C3)

1.4 Reward Design

Defense

Attack

2.0 Future Work

Do not design Reward, Make Agent to Explore.

2.1 QnA & Demo

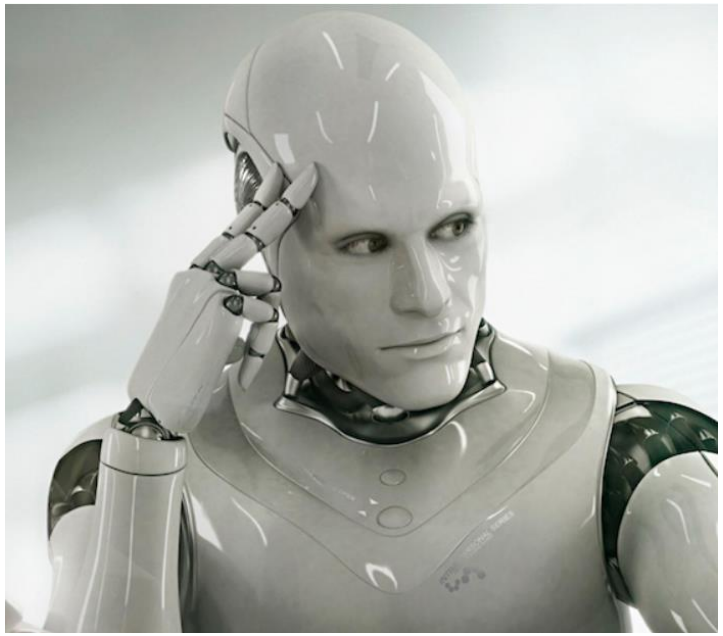

VS

?

Any Volunteers?