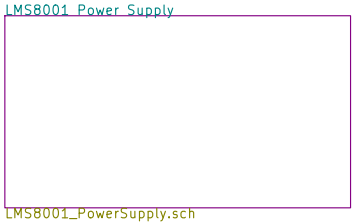

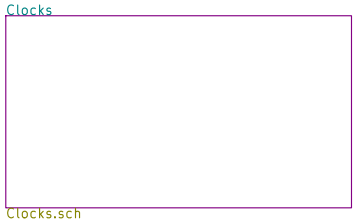

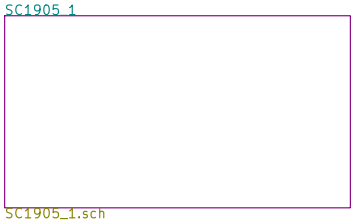

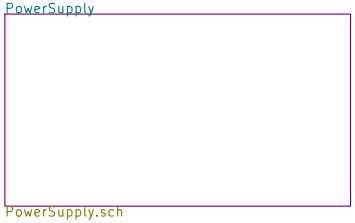

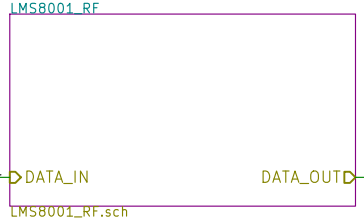

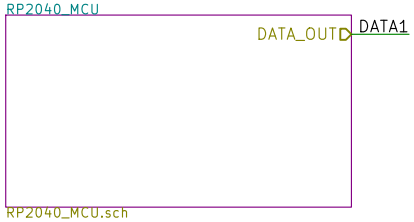

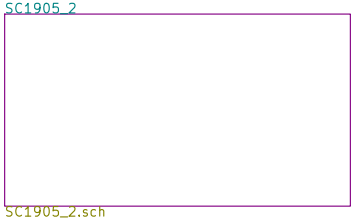

Lime Microsystems

Sheet: /
File: FrontEnd_5G.sch

Title: FrontEnd_5G

Size: A4	Date: 10 Feb 2022	**Rev: 1v0**
KiCad E.D.A.	kicad 4.0.7-e2-637658ubuntu16.04.1	Id: 1/20

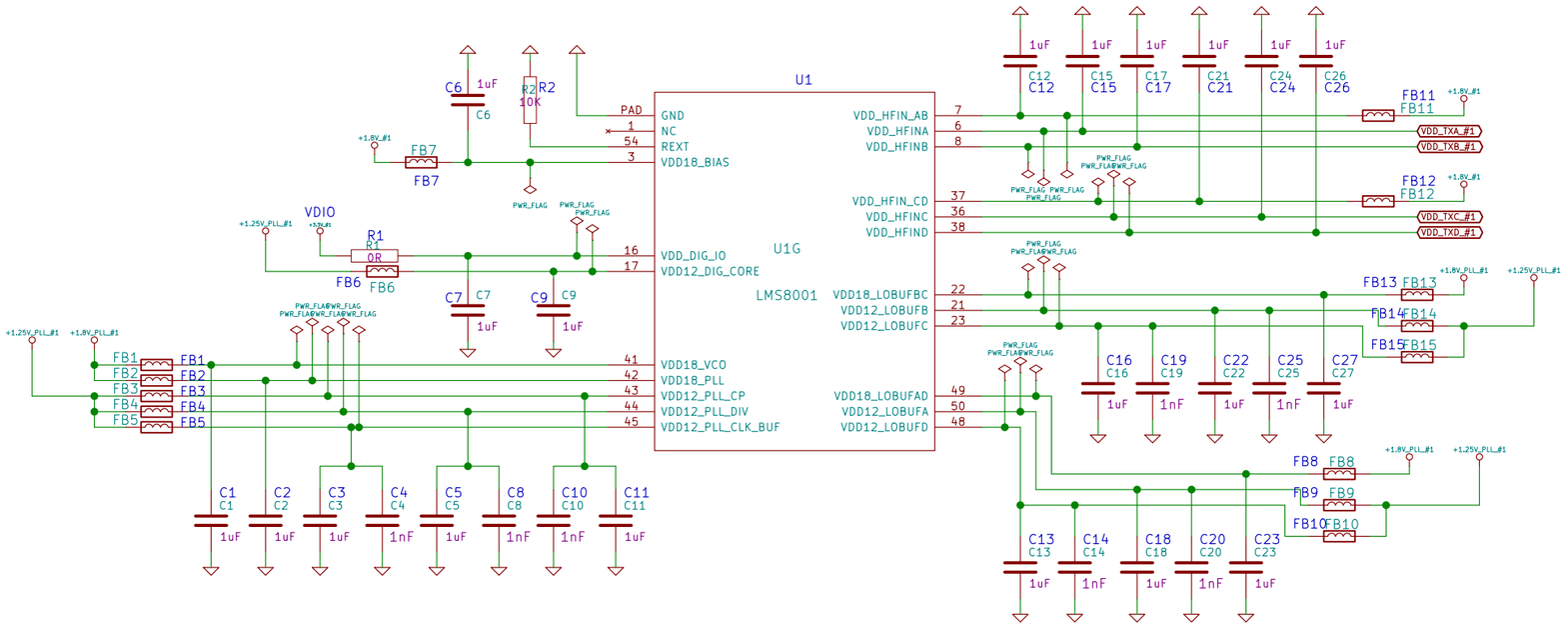

LMS8001 #1

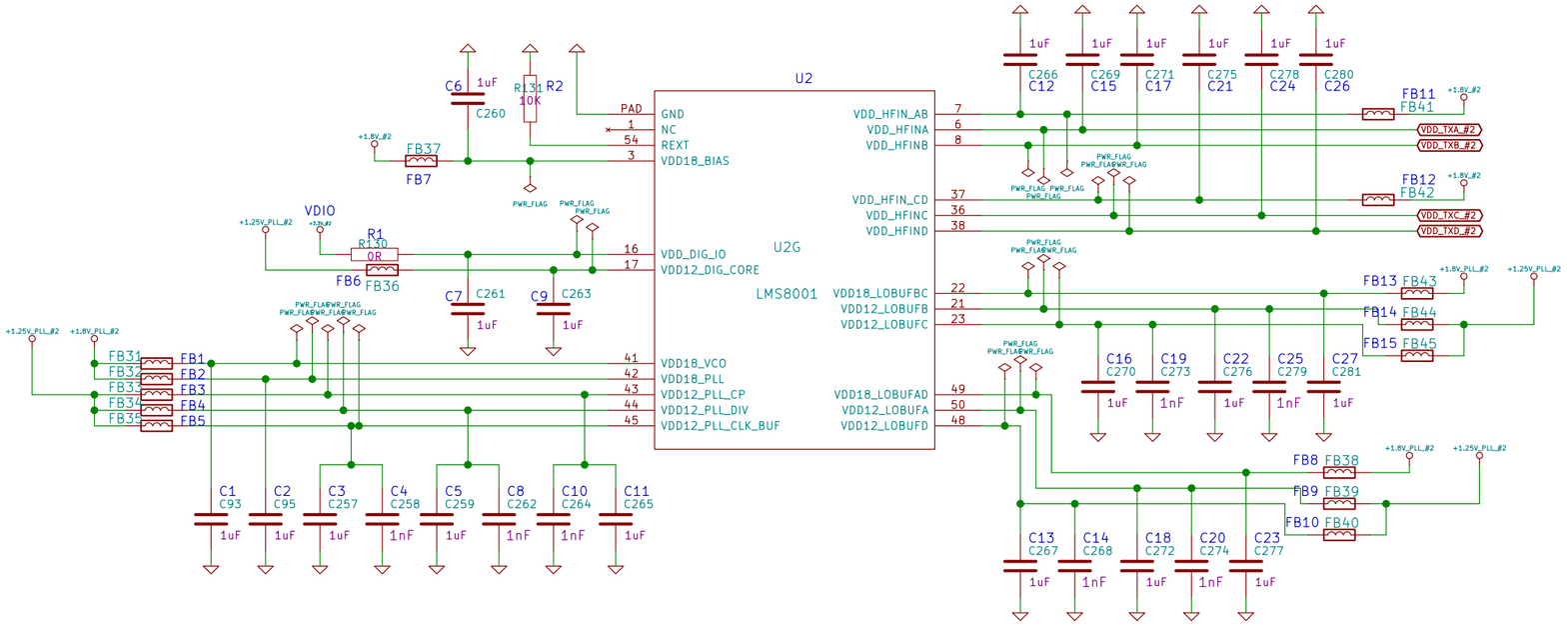

LMS8001 #2

Lime Microsystems		
Sheet: /LMS8001 Power Supply/		
File: LMS8001_PowerSupply.sch		
Title: FrontEnd_5G		
Size: A3	Date: 10 Feb 2022	**Rev: 1v0**
KiCad E.D.A. kicad 4.0.7-e2-637658ubuntu16.04.1		Id: 2/20

For DRC pass

PWR_FLAG

GND

EXTERNAL POWER +12V

PIN_HEADER_1X3

TPS62136RGXT

2.2uH

7.5V or 5V

NCP59301DS50R4G

12V from PCIe board

If linear voltage regulator is fitted then 976K is used for DC-DC convertor

POWER SOURCE SELECTION

EXTERNAL POWER +5V

PINHEADER_2X3

Jumper_SNM-100-BK-T

Protection

NCP349

+5V out

RF supply

EXTERNAL POWER +5V

+5V in

+5V out for RF

3V out

USB

VBUS_USB

600_Ohm_@_100MHz_2A

Protection

+5V_USB out

LMS8001_#1 suppy

+5V in

3.3V out

1.8V out

+1.33V out

LMS8001_#2 suppy

3.3V out

1.8V out

+1.33V out

PLL Supply

+5V in

+3.3V_PLL out

3.3V in

+1.8V_PLL out

1.25V_PLL out

PLL Supply

+5V in

+3.3V_PLL out

3.3V in

1.25V_PLL out

SC1905_#1 Chips Supply

+5V in

3.3V out for SC1905

1.8V out for SC1905

SC1905_#2 Chips Supply

+5V in

3.3V out for SC1905

1.8V out for SC1905

3.3V VDIO

+5V in

1.8V out

+5V in

Lime Microsystems	
Sheet: /PowerSupply/	
File: PowerSupply.sch	
Title: FrontEnd_5G	
Size: A1	Date: 10 Feb 2022
KiCad E.D.A. kicad 4.0.7-e2-6376588ubuntu16.04.1	**Rev: 1v0**
	Id: 3/20

LMS8001 #1

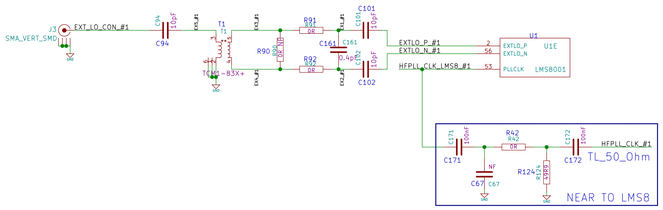

LMS8001 #2

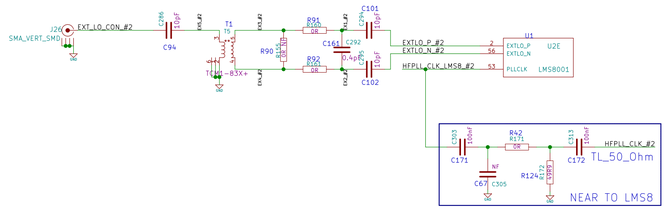

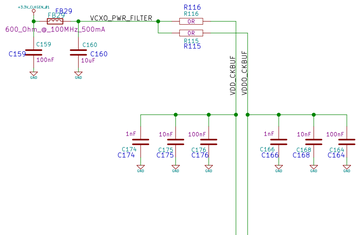

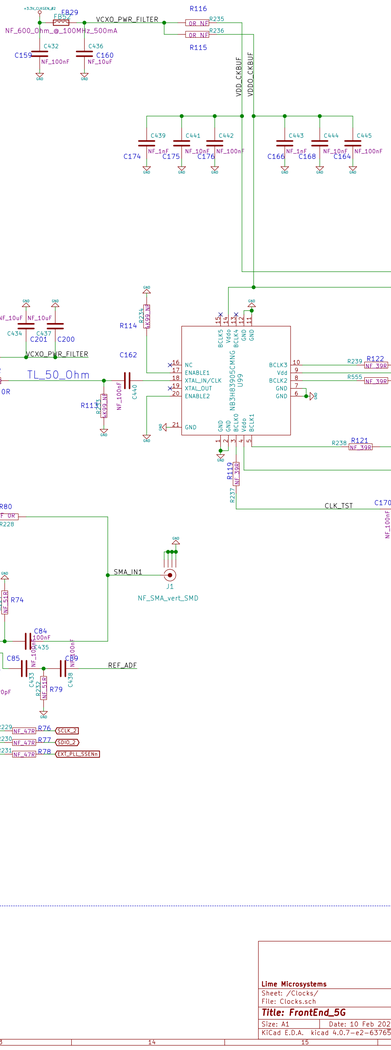

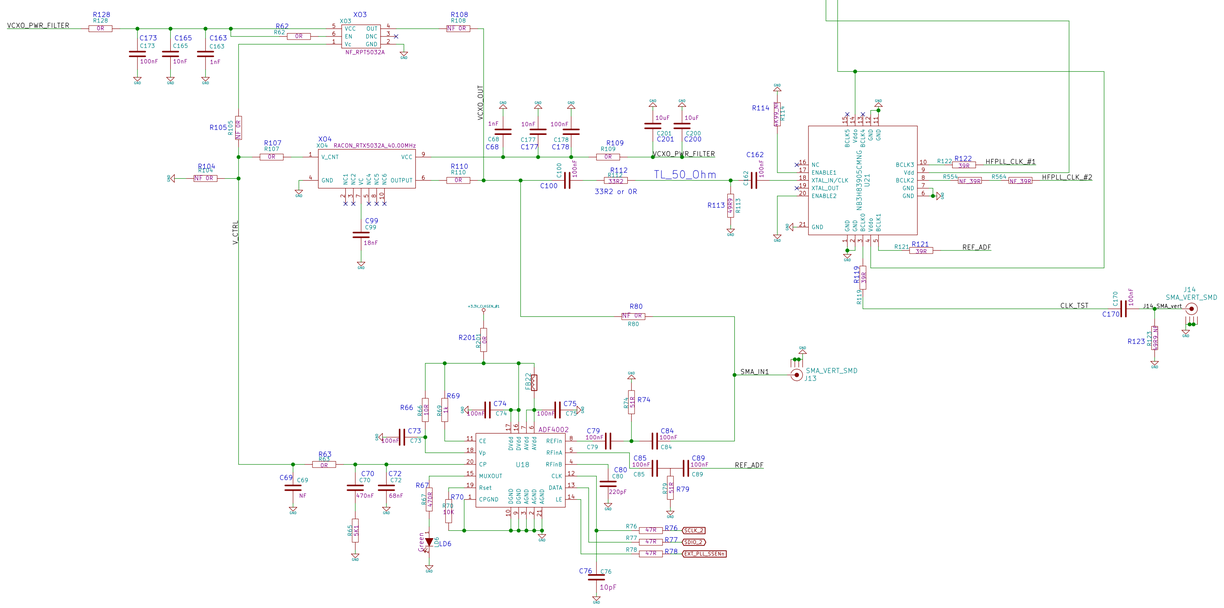

Not Fitted

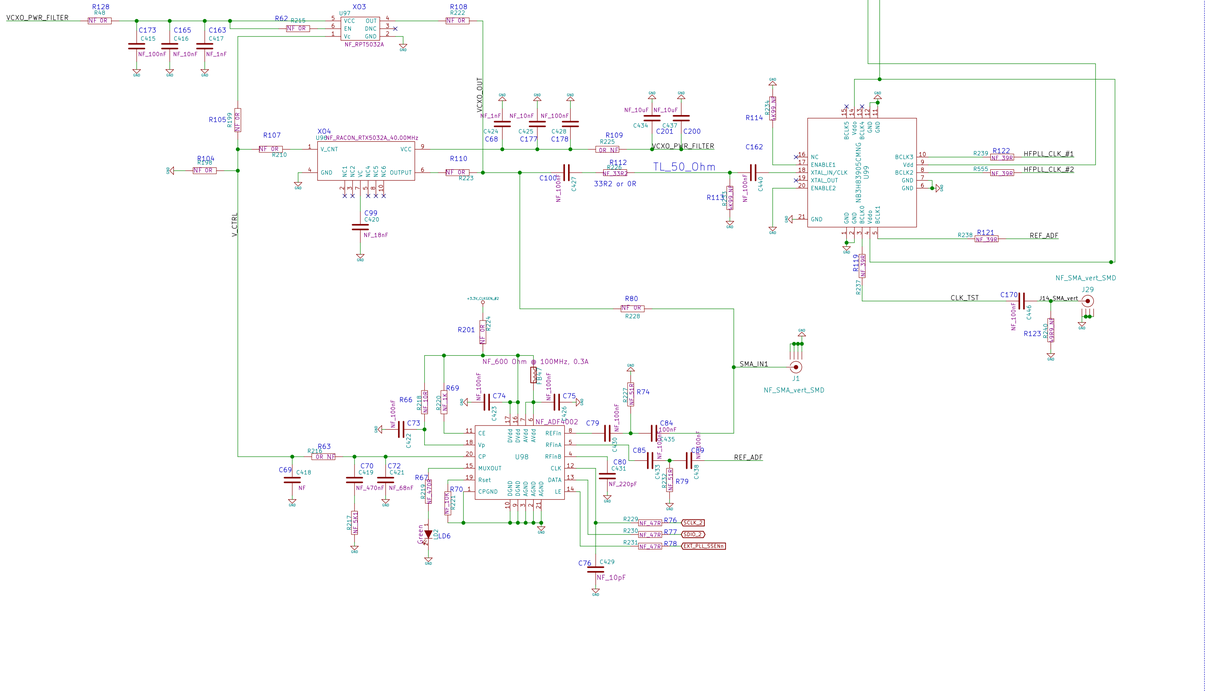

Lime Microsystems
Sheet: /Clocks/
File: Clocks.sch

Title: FrontEnd_5G

Size: A1	Date: 10 Feb 2022	Rev: 1v0
KiCad E.D.A. kicad 4.0.7-e2-6376~58~ubuntu16.04.1		Id: 4/20

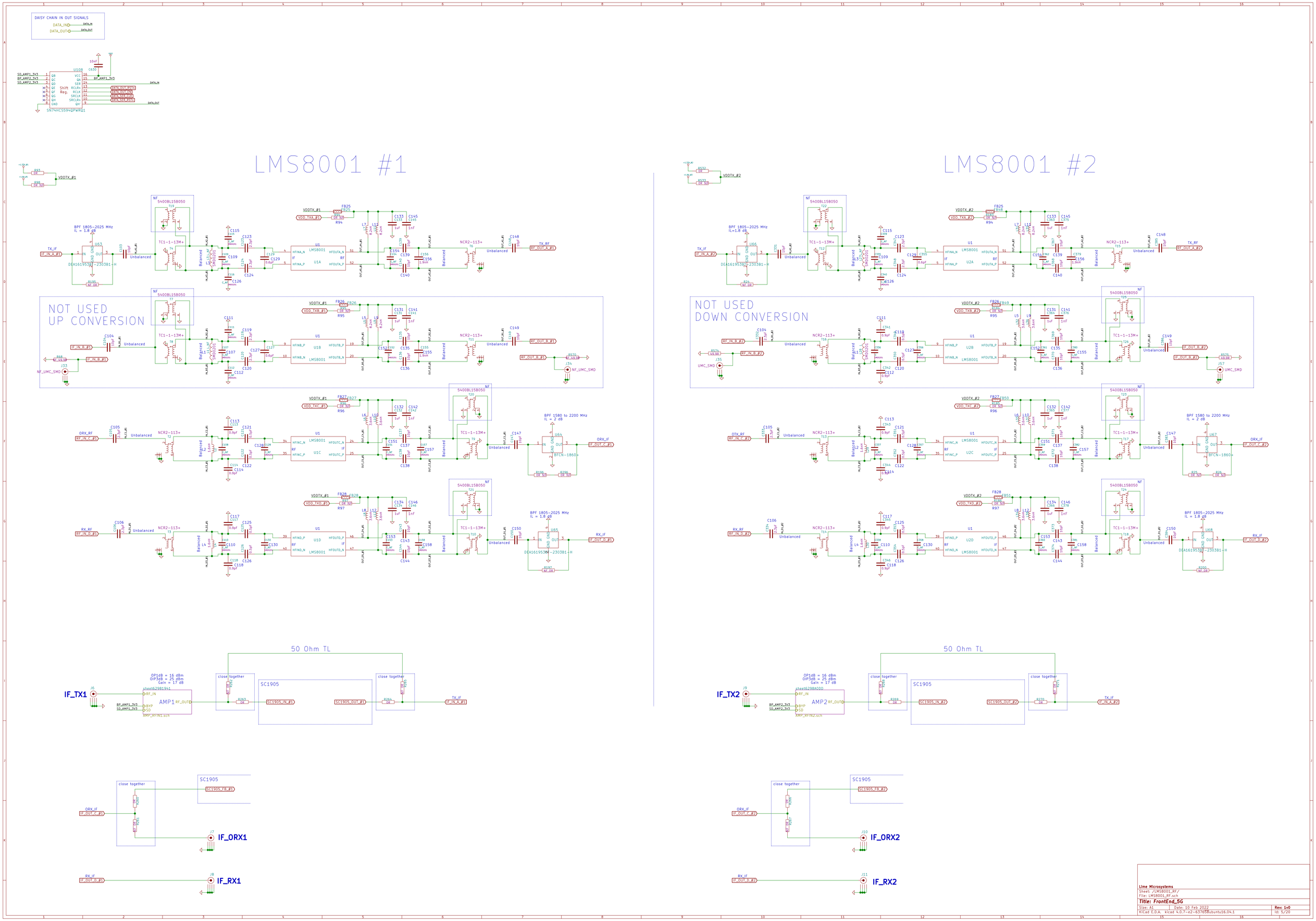

DAISY CHAIN IN OUT SIGNALS
DATA_IN
DATA_OUT
LMS8001 #1
LMS8001 #2
NOT USED
UP CONVERSION
NOT USED
DOWN CONVERSION
50 Ohm TL
IF_TX1
IF_TX2
IF_ORX1
IF_ORX2
IF_RX1
IF_RX2
Lime Microsystems
Sheet: /LMS8001_RF/
File: LMS8001_RF.sch
Title: FrontEnd_5G
Size: A1
Date: 10 Feb 2022
Rev: 1v0
KiCad E.D.A. kicad 4.0.7-e2-637658ubuntu16.04.1
Id: 5/20

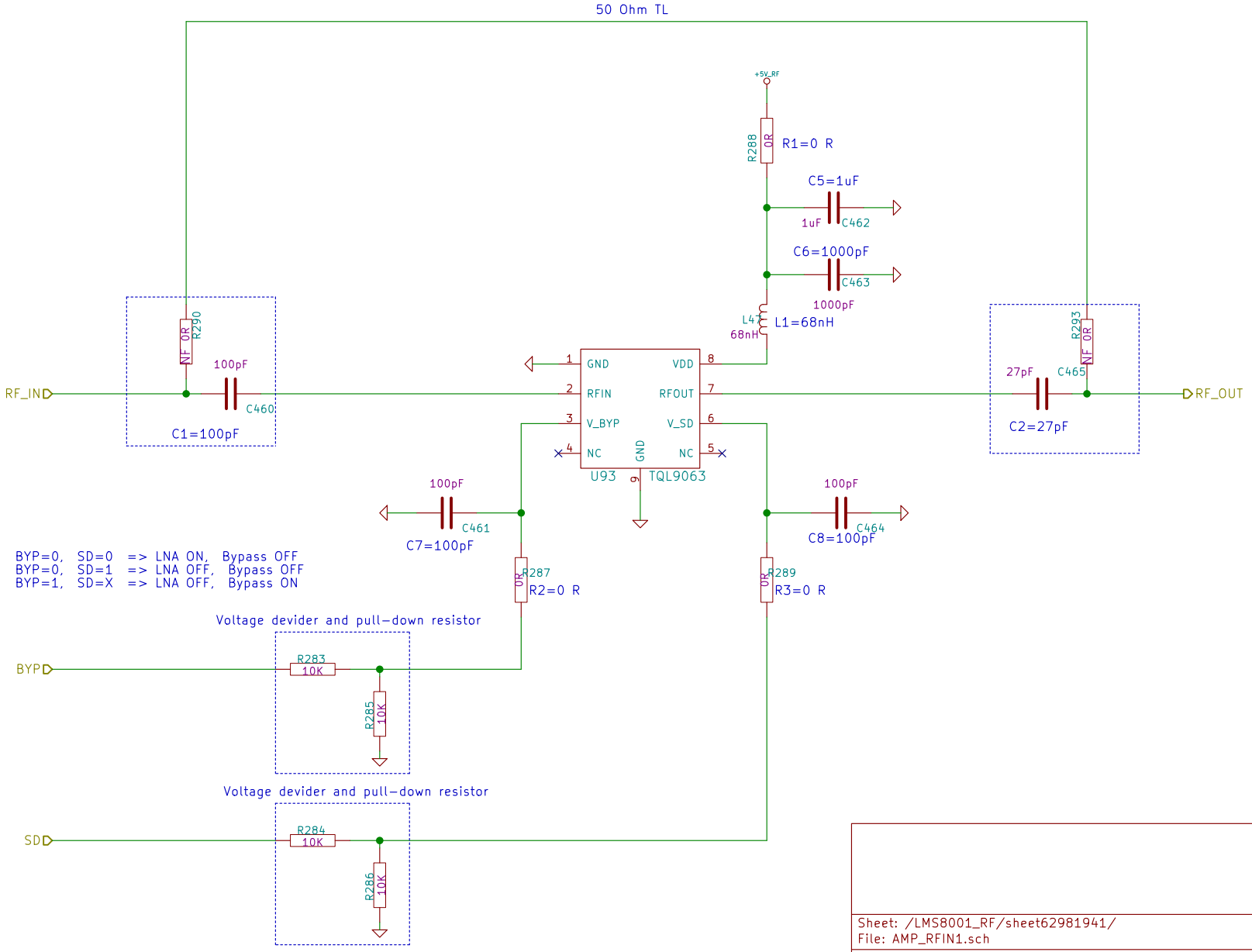

Sheet: /LMS8001_RF/sheet62981941/
File: AMP_RFIN1.sch

Title:

Size: A4	Date:	**Rev:**
KiCad E.D.A. kicad 4.0.7-e2-637658ubuntu16.04.1		Id: 6/20

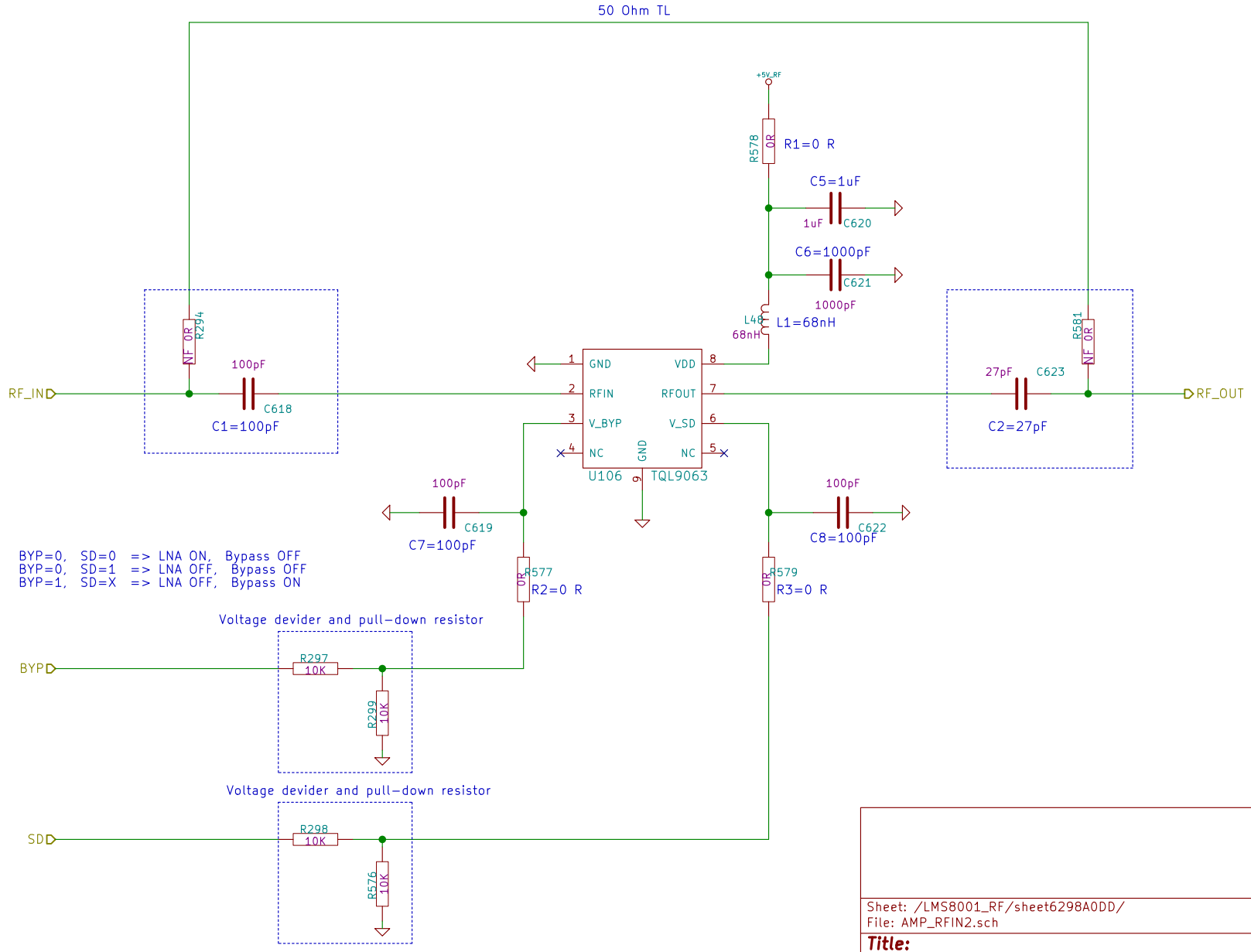

Sheet: /LMS8001_RF/sheet6298A0DD/
File: AMP_RFIN2.sch

Title:

Size: A4	Date:	**Rev:**
KiCad E.D.A. kicad 4.0.7-e2-637658ubuntu16.04.1		Id: 7/20

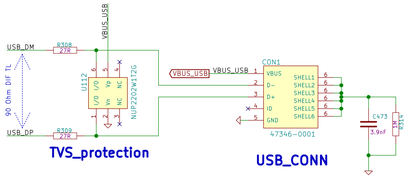
USB_DM
USB_DP
90 Ohm DIF IL
R308
27R
R309
27R
VBUS_USB
U112
NUP2202W1T2G
TVS_protection
VBUS_USB
CON1
VBUS
D-
D+
ID
GND
SHELL1
SHELL2
SHELL3
SHELL4
SHELL5
SHELL6
47346-0001
USB_CONN
C473
3.9nF
R474
10K

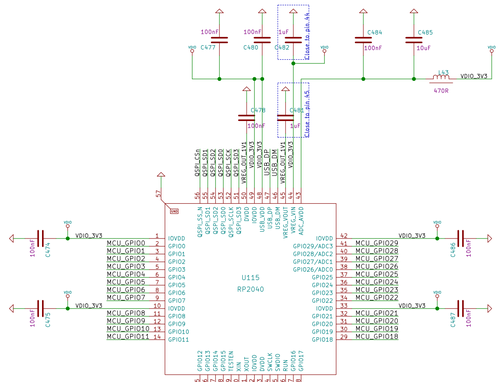
C477
100nF
C480
100nF
C482
1uF
Erase to pin A5
C484
100nF
C485
10uF
L43
470R
VDIO_3V3
C479
100nF
C481
100nF
Erase to pin A5
U115
RP2040
GPIO_SCn
GPIO_SD0
GPIO_SD1
GPIO_SD2
GPIO_SD3
GPIO_SCK
GPIO_SD0
USB_DP
USB_DM
VREG_VOUT
VREG_LX
VREG_AVDD
IOVDD
GPIO29/ADC3
GPIO28/ADC2
GPIO27/ADC1
GPIO26/ADC0
GPIO25
GPIO24
GPIO23
GPIO22
GPIO21
GPIO20
GPIO19
GPIO18
MCU_GPIO29
MCU_GPIO28
MCU_GPIO27
MCU_GPIO26
MCU_GPIO25
MCU_GPIO24
MCU_GPIO23
MCU_GPIO22
MCU_GPIO21
MCU_GPIO20
MCU_GPIO19
MCU_GPIO18
C476
100nF
C475
100nF
C486
100nF
C487
100nF
MCU_GPIO00
MCU_GPIO01
MCU_GPIO02
MCU_GPIO03
MCU_GPIO04
MCU_GPIO05
MCU_GPIO06
MCU_GPIO07
MCU_GPIO08
MCU_GPIO09
MCU_GPIO10
MCU_GPIO11
GPIO0
GPIO1
GPIO2
GPIO3
GPIO4
GPIO5
GPIO6
GPIO7
GPIO8
GPIO9
GPIO10
GPIO11
GPIO12
GPIO13
GPIO14
GPIO15
TESTEN
XOUT
XIN
DVDD
SWCLK
SWDIO
RUN
GPIO16
GPIO17
MCU_GPIO12
MCU_GPIO13
MCU_GPIO14
MCU_GPIO15
MCU_GPIO16
MCU_GPIO17
SWDIO
SWCLK
R311
1K
R312
27R
C476
100nF
SWDIO
SWCLK
R313
10K
C488
100nF
XIN
XOUT

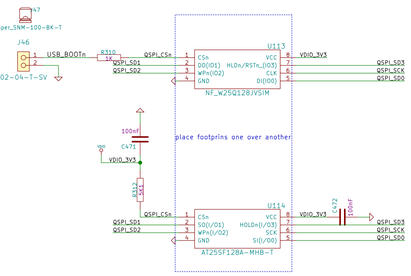
U47
Jumper_SNM-100-BK-T
J46
TSM-102-04-T-SV
USB_BOOTn
R310
10K
QSPI_CSn
QSPI_SD1
QSPI_SD2
U113
CSn
DO(IO1)
WPn(IO2)
GND
VCC
HLDn/RSTn_(IO3)
CLK
DI(IO0)
NF_W25Q128JVSIM
VDIO_3V3
QSPI_SD3
QSPI_SCK
QSPI_SD0
C471
100nF
place footprints one over another
R313
10K
U114
AT25SF128A-MHB-T
C472
100nF
C469
27pF
X6
12MHz
C470
27pF
R313
1K
XIN
XOUT
R311
1K
RESETn
SW_PUSH
RESET

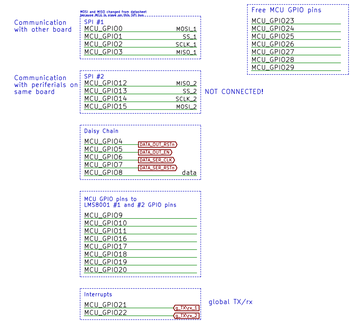
Communication with other board
SPI #1
MCU_GPIO0 MOSI_1
MCU_GPIO1 SS_1
MCU_GPIO2 SCLK_1
MCU_GPIO3 MISO_1
Communication with periferials on same board
SPI #2
MCU_GPIO12 MISO_2
MCU_GPIO13 SS_2
MCU_GPIO14 SCLK_2
MCU_GPIO15 MOSI_2
NOT CONNECTED!
Daisy Chain
MCU_GPIO5 DATA_OUT_RSTn
MCU_GPIO6 DATA_OUT_PL
MCU_GPIO7 DATA_SER_CLK
MCU_GPIO8 data
MCU GPIO pins to LMS8001 #1 and #2 GPIO pins
MCU_GPIO9
MCU_GPIO10
MCU_GPIO11
MCU_GPIO16
MCU_GPIO17
MCU_GPIO18
MCU_GPIO19
MCU_GPIO20
Interrupts
MCU_GPIO21 TxDet_1
MCU_GPIO22 TxDet_2
global TX/rx
Free MCU GPIO pins
MCU_GPIO23
MCU_GPIO24
MCU_GPIO25
MCU_GPIO26
MCU_GPIO27
MCU_GPIO28
MCU_GPIO29

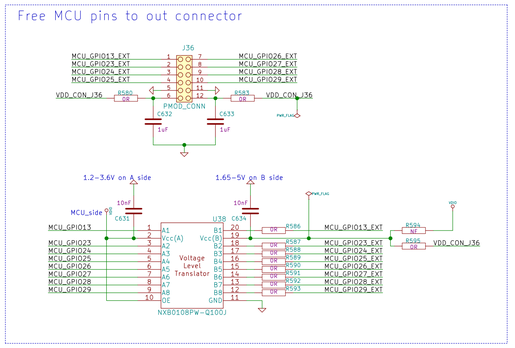
Free MCU pins to out connector
J36
MCU_GPIO13_EXT
MCU_GPIO23_EXT
MCU_GPIO24_EXT
MCU_GPIO25_EXT
MCU_GPIO26_EXT
MCU_GPIO27_EXT
MCU_GPIO28_EXT
MCU_GPIO29_EXT
VDD_CON_J36
R580 0R
R583 0R
PMOD_CONN
C632 1uF
C633 1uF
PWR_FLAG
1.2-3.6V on A side
1.65-5V on B side
MCU_side
C631 10nF
C634 10nF
U38
Voltage Level Translator
NXB0108PW-Q100J
R586 0R
R587 0R
R588 0R
R589 0R
R590 0R
R591 0R
R592 0R
R593 0R
R594 NF
R595 0R

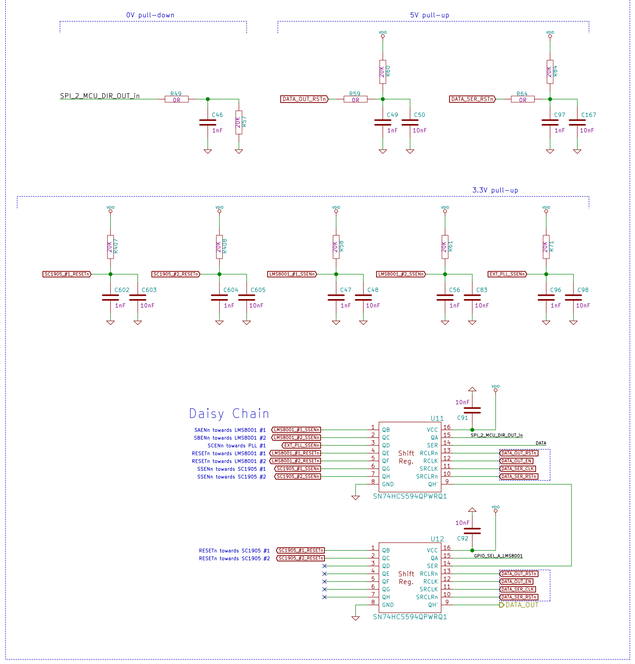
0V pull-down
5V pull-up
3.3V pull-up
SPI_2_MCU_DIR_OUT_In
R49 0R
C96 1nF
R50K 100K
DATA_OUT_RSTn
R69 0R
C49 1nF
C50 10nF
DATA_SER_RSTn
R64 0R
C97 1nF
C167 10nF
R50K 100K
R51K 100K
R52K 100K
R53K 100K
R54K 100K
SC1905_P1_RESETn
SC1905_P2_RESETn
LMS8001_P1_SSENn
LMS8001_P2_SSENn
EXT_PLL_SSENn
C602 1nF
C603 10nF
C604 1nF
C605 10nF
C47 1nF
C48 10nF
C56 1nF
C83 10nF
C96 1nF
C98 10nF
Daisy Chain
U11
SN74HCS594QPWRQ1
SAENn towards LMS8001 #1
SBENn towards LMS8001 #2
SCENn towards PLL #1
RESETn towards LMS8001 #1
RESETn towards LMS8001 #2
SSENn towards SC1905 #1
SSENn towards SC1905 #2
QB
QC
QD
QE
QF
QG
QH
GND
VCC
QA
SER
Shift Reg.
RCLRn
RCLK
SRCLK
SRCLRn
SPI_2_MCU_DIR_OUT_In
DATA
DATA_OUT_RSTn
DATA_OUT_PL
DATA_SER_CLK
DATA_SER_RSTn
C91 10nF
U12
RESETn towards SC1905 #1
RESETn towards SC1905 #2
GPIO_SEL_A_LMS8001
DATA_OUT
C92 10nF

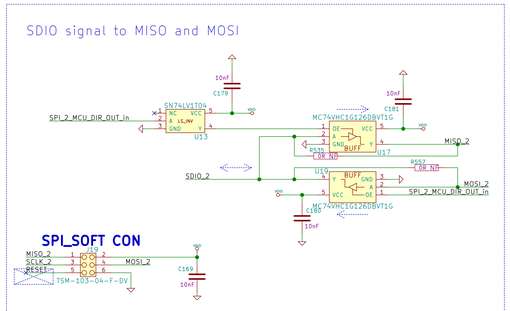
SDIO signal to MISO and MOSI
SPI_2_MCU_DIR_OUT_In
SN74LV1T04
U13
C179 10nF
MC74VHC1G126DBVT1G
U17
C181 10nF
R535 0R NP
MISO_2
SDIO_2
U19
R557 0R NP
MOSI_2
SPI_2_MCU_DIR_OUT_In
C180 10nF
SPI_SOFT CON
MISO_2
SCLK_2
RESETn
MOSI_2
TSM-103-04-F-DV
C169 10nF

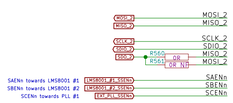
MOSI_2
MISO_2
SCLK_2
SDIO_2
MISO_2
MOSI_2
R560 0R NP
R561 0R NP
SAENn towards LMS8001 #1
SBENn towards LMS8001 #2
SCENn towards PLL #1
SAENn
SBENn
SCENn
RESETn towards LMS8001 #1
RESETn towards LMS8001 #2
LMS8001_A_RESETn
LMS8001_B_RESETn
RESETn towards SC1905 #1
RESETn towards SC1905 #2
SC1905_1_RESETn
SC1905_2_RESETn

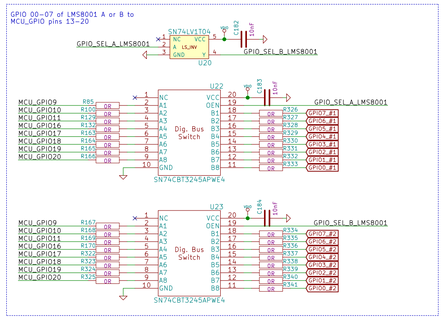
GPIO 00-07 of LMS8001 A or B to MCU_GPIO pins 13-20
SN74LV1T04
U20
C183 10nF
GPIO_SEL_A_LMS8001
GPIO_SEL_B_LMS8001
MCU_GPIO9
MCU_GPIO10
MCU_GPIO11
MCU_GPIO16
MCU_GPIO17
MCU_GPIO18
MCU_GPIO19
MCU_GPIO20
R85 0R
R1208 0R
R1209 0R
R1327 0R
R1163 0R
R1164 0R
R1165 0R
R1166 0R
U22
Dig. Bus Switch
SN74CBT32345APWE4
C181 10nF
R326 0R
R327 0R
R328 0R
R329 0R
R330 0R
R331 0R
R332 0R
R333 0R
GPIO7_#1
GPIO6_#1
GPIO5_#1
GPIO4_#1
GPIO3_#1
GPIO2_#1
GPIO1_#1
GPIO0_#1
U23
C184 10nF
R334 0R
R335 0R
R336 0R
R337 0R
R338 0R
R339 0R
R340 0R
R341 0R
GPIO7_#2
GPIO6_#2
GPIO5_#2
GPIO4_#2
GPIO3_#2
GPIO2_#2
GPIO1_#2
GPIO0_#2

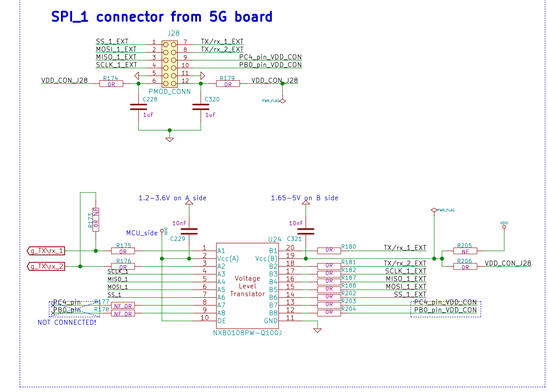
SPI_1 connector from 5G board
J28
SS_1_EXT
MOSI_1_EXT
MISO_1_EXT
SCLK_1_EXT
TX/rx_1_EXT
TX/rx_2_EXT
PC4_pin_VDD_CON
PB0_pin_VDD_CON
VDD_CON_J28
R174 0R
R179 0R
PMOD_CONN
C228 1uF
C320 1uF
PWR_FLAG
1.2-3.6V on A side
1.65-5V on B side
R177 4.7K
MCU_side
C229 10nF
C321 10nF
U24
Voltage Level Translator
NXB0108PW-Q100J
g_TXrx_1
g_TXrx_2
R175 0R
R176 0R
SCLK_1
MOSI_1
SS_1
PC4_pin
PB0_pin
NOT CONNECTED!
R177 NF
R178 NF
R180 0R
R181 0R
R182 0R
R187 0R
R188 0R
R190 0R
R191 0R
R192 0R
R193 0R
R202 0R
R203 0R
R204 0R
R205 NF
R206 0R
TX/rx_1_EXT
TX/rx_2_EXT
SCLK_1_EXT
MISO_1_EXT
SS_1_EXT
PC4_pin_VDD_CON
PB0_pin_VDD_CON
VDD_CON_J28

LMS8001 #1

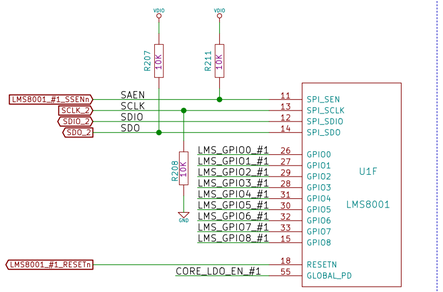

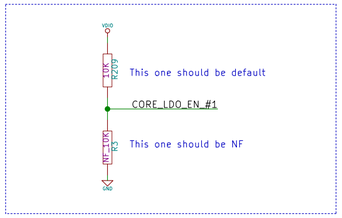

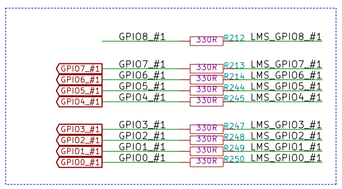

LMS8001 #2

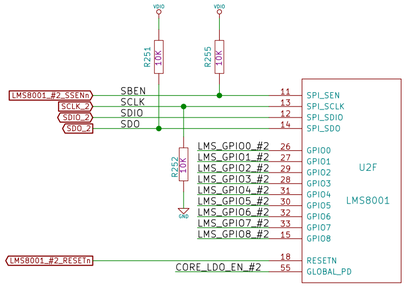

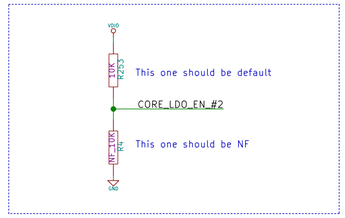

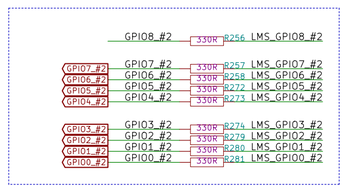

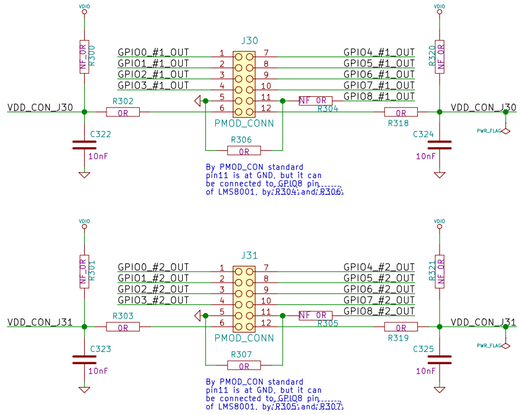

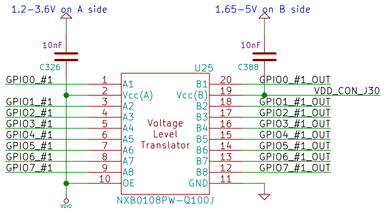

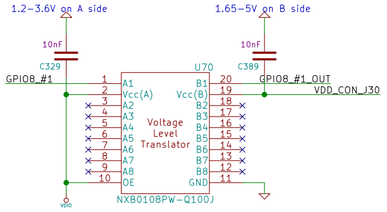

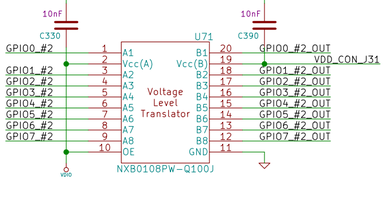

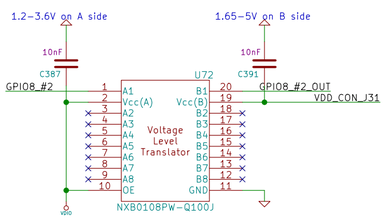

Sheet: /LMS98001_GPIO/
File: LMS98001_GPIO.sch

Title:

Size: A2	Date:	Rev:
KiCad E.D.A. kicad 4.0.7-e2-637658ubuntu16.04.1		Id: 9/20

Buffers for MGPOUT 0-3
Not Fitted

U90 NF_LMV324QDRG4

R54 NF_10kΩ	VG3	1	OUTA	OUTD	14	YG2	R52 NF_10kΩ
R53 NF_10kΩ	MGPO3(P38)	3	+INA	+IND	12	MGPO2(P37)	R57 NF_10kΩ
R55 NF_10kΩ		2	-INA	-IND	13		R56 NF_10kΩ
		4	V+	V-	11		
R52 NF_10kΩ	MGPO1(P35)	5	+INB	+INC	10	MGPO0(P34)	R60 NF_10kΩ
R58 NF_10kΩ		6	-INB	-INC	9		R59 NF_10kΩ
R19 NF_10kΩ	VG1	7	OUTB	OUTC	8	YG0	R50 NF_10kΩ

C399 NF_10pF · C36 · C403 NF_10pF · C37 · C35 5pF · C34 5pF · C402 NF_10pF · C38 · C401 NF_10pF · C39

Master Board / EVK1900 board

Master Board	EVK1900 board
STATO(P16)	STATO
RESETN(P25)	RESETN
SSN(P24)	SSN
SDI(P18)	SDI
SDO(P26)	SDO
SCLK(P23)	SCLK
WDTEN(P22)	WDTEN
LOADENB(P27)	LOADENB
DGPIN1(P17)	DGPIN1
DGPIN0(P15)	DGPIN0

J9 100568R4-114LF

WDTEN	1	2	STATO
LOADENB	3	4	RESETN
DGPIN1	5	6	SSN
DGPIN0	7	8	SDI
	9	10	SDO
	11	12	SCLK
	13	14	

R10 4k00 · D2 SML-D12W1RT86 · R8 4k01 · D1 SML-D12W1RT86 · SW1 SW-SPDT · RESETN · R392 NF_10kΩ · Q3 Q2 2N7002 · STATO

PMOD_CONN

J52 PMOD_CONN

STATO_EXT	1	7	SCLK_EXT
SSN_EXT	2	8	WDTEN_EXT
SDI_EXT	3	9	LOADENB_EXT
SDO_EXT	4	10	DGPIN1_EXT
	5	11	
	6	12	

R471 NF_0Ω · R472 NF_0Ω · VDD_CON_J52 · C576 10nF · R485 NF_0Ω · R486 NF_0Ω · VDD_CON_J52 · C580 10nF

1.2-3.6V on A side / 1.65-5V on B side

U130 NXB0108BPW-Q100J (Voltage Level Translator)

STATO	R475	1	STATO_EXT
SSN	R476	2	SSN_EXT
SDI	R477	3	SDI_EXT
SDO	R478	4	SDO_EXT
SCLK	R479	5	SCLK_EXT
WDTEN	R480	6	WDTEN_EXT
LOADENB	R481	7	LOADENB_EXT
DGPIN1	R482	8	DGPIN1_EXT

C579 10nF · C581 10nF · VDD_CON_J52 · POSSIBLY CHANGE!

1.2-3.6V on A side / 1.65-5V on B side

U132 NXB0108BPW-Q100J (Voltage Level Translator)

STATO	R460	1	STATO_CPU
RESETN	R461	2	RESETN_CPU
SSN	R462	3	SSN_CPU
SDI	R463	4	SDI_CPU
SDO	R464	5	SDO_CPU
SCLK	R465	6	SCLK_CPU
WDTEN	R466	7	WDTEN_CPU
LOADENB	R467	8	LOADENB_CPU

C575 10nF · C577 10nF · NOT CONNECTED! · NOT CONNECTED!

1.2-3.6V on A side / 1.65-5V on B side

U123 NXB0108BPW-Q100J (Voltage Level Translator)

DGPIN1	R405	1	DGPIN1_CPU
DGPIN0	R406	2	DGPIN0_CPU

C525 10nF · C528 10nF · NOT CONNECTED! · NOT CONNECTED!

SPI Connections

U133 SN74CB3T3245APWE4 (Dig. Bus Switch)

SCLK_CPU	R468	18	SCLK_2
SDO_CPU	R469	17	MISO_2
SDI_CPU	R470	16	MOSI_2
SSN_CPU	R471	15	SC1905_SSENn
RESETN_CPU	R472	14	RESETN

C578 10nF · R483 NF_0Ω · R484 NF_0Ω · R485 NF_0Ω · R486 NF_0Ω · R416 NF_0Ω · J54 · J53 TSM-102-04-T-SV · Jumper_SNH-100-BK-T

Jumper ON - SPI of SC1905 connected to MCU
Jumper OFF - SPI of SC1905 disconnected from MCU

External Connections with SC1905

RFOUT(P40)	SC1905_OUT_#1	RF Connections
RFIN(P2)	SC1905_IN_#1	
RFFB(P12)	SC1905_FB_#1	
Direct Connection to MCU		
RESETN_CPU	R414 0R_NF	
RESETN	R415 0R	SC1905_#1_RESETn — Chip Reset
Connection to MCU Enabled with Jumper, J53		
SCLK_2	SCLK_2	SPI Connections
MISO_2	MISO_2	
MOSI_2	MOSI_2	
SC1905_SSENn	SC1905_#1_SSENn	

RFOUT Attenuator

R376 0R_NF · R27 · R26 · R373 0R · R377 0R_NF · R25

RFIN Attenuator

R24 NF_0R · R29 · R22 · R374 0R · R372 NF_0R · R21 · R23 NF_0R · R378

Thru Path Attenuator

R367 0R_NF · R13 · R14 · R366 0R · R368 0R_NF · R43

Optional RF Thru Path without Delay Line

R102 0R · R365 · R9 0R · R369 · R17 0R · R364 · R11 0R · R370

U119 BD1722J50100AHF · U120 BD1722J50100AHF · U22 BD1722J50100AHF

T1 · T2 · L2 5.6nH · L1 18nH · L4 5.6nH · L5 1.2nH · L6 1.2nH · L3 5.6nH · L7 2.2nH · L8 2.2nH · L9 2.2nH · FT3 · FT1 120R · FT2 120R

C17 0.2pF · C491 · C26 C450 15pF · C31 C492 1nF · C28 C490 15pF · C18 C493 0.9pF · C33 C498 1nF · C34 C600 1nF · C35 C501 1nF · C36 C512 15pF · C45 NF_10pF C518 · C47 NF_10pF C409 · C410 NF_10pF · C411 NF_1nF C42 · C412 NF_1nF C43 · C413 NF_1nF C44 · C414 NF_1nF C45 · C415 NF_1nF C46 · C416 NF_1nF C47 · C417 NF_1nF C48 · C418 NF_1nF C49 · C419 NF_1nF C50 · C420 0.5pF · C421 NF_1nF C51 · C422 NF_1nF C52 · C423 NF_1nF C53 · C424 NF_1nF C54 · C425 NF_1nF C55 · C426 NF_1nF C56 · C427 NF_1nF C57 · C428 NF_1nF C58 · C429 NF_1nF C59 · C430 NF_1nF C60 · C431 NF_1nF C61 · C432 NF_1nF C62 · C433 NF_1nF C63 · C434 NF_1nF C64 · C435 NF_1nF C65 · C436 NF_1nF C66 · C437 NF_1nF C67 · C438 NF_1nF C68 · C439 NF_1nF C69 · C440 NF_1nF C70 · C441 NF_1nF C71 · C442 NF_1nF C72 · C443 NF_1nF C73 · C444 NF_1nF C74 · C445 NF_1nF C75 · C446 NF_1nF C76 · C447 NF_1nF C77 · C448 NF_1nF C78 · C449 NF_1nF C79 · C450 NF_1nF C80 · C451 NF_1nF C81 · C452 NF_1nF C82 · C453 NF_1nF C83 · C454 NF_1nF C84 · C455 NF_1nF C85 · C456 NF_1nF C86 · C457 NF_1nF C87 · C458 NF_1nF C88 · C459 NF_1nF C89 · C460 NF_1nF C90 · C461 NF_1nF C91 · C462 NF_1nF C92 · C463 NF_1nF C93 · C464 NF_1nF C94 · C465 NF_1nF C95 · C466 NF_1nF C96 · C467 NF_1nF C97 · C468 NF_1nF C98 · C469 NF_1nF C99 · C470 NF_1nF C100 · C471 NF_1nF C101 · C472 NF_1nF C102 · C473 NF_1nF C103 · C474 NF_1nF C104 · C475 NF_1nF C105 · C476 NF_1nF C106 · C477 NF_1nF C107 · C478 NF_1nF C108 · C479 NF_1nF C109 · C480 NF_1nF C110 · C481 NF_1nF C111 · C482 NF_1nF C112 · C483 NF_1nF C113 · C484 NF_1nF C114 · C485 NF_1nF C115 · C486 NF_1nF C116 · C487 NF_1nF C117 · C488 NF_1nF C118 · C489 NF_1nF C119 · C490 NF_1nF C120 · C491 NF_1nF C121 · C492 NF_1nF C122 · C493 NF_1nF C123 · C494 NF_1nF C124 · C495 NF_1nF C125 · C496 NF_1nF C126 · C497 NF_1nF C127 · C498 NF_1nF C128 · C499 NF_1nF C129 · C500 NF_1nF C130 · C501 NF_1nF C131 · C502 NF_1nF C132 · C503 NF_1nF C133 · C504 NF_1nF C134 · C505 NF_1nF C135 · C506 NF_1nF C136 · C507 NF_1nF C137 · C508 NF_1nF C138 · C509 NF_1nF C139 · C510 NF_1nF C140 · C511 NF_1nF C141 · C512 NF_1nF C142 · C513 NF_1nF C143 · C514 NF_1nF C144 · C515 NF_1nF C145 · C516 NF_1nF C146 · C517 NF_1nF C147 · C518 NF_1nF C148 · C519 NF_1nF C149 · C520 NF_1nF C150 · C521 NF_1nF C151 · C522 NF_1nF C152 · C523 NF_1nF C153 · C524 NF_1nF C154 · C525 NF_1nF C155 · C526 NF_1nF C156 · C527 NF_1nF C157 · C528 NF_1nF C158 · C529 NF_1nF C159 · C530 NF_1nF C160 · C531 NF_1nF C161 · C532 NF_1nF C162 · C533 NF_1nF C163 · C534 NF_1nF C164 · C535 NF_1nF C165 · C536 NF_1nF C166 · C537 NF_1nF C167 · C538 NF_1nF C168 · C539 NF_1nF C169 · C540 NF_1nF C170 · C541 NF_1nF C171 · C542 NF_1nF C172 · C543 NF_1nF C173 · C544 NF_1nF C174 · C545 NF_1nF C175 · C546 NF_1nF C176 · C547 NF_1nF C177 · C548 NF_1nF C178 · C549 NF_1nF C179 · C550 NF_1nF C180 · C551 NF_1nF C181 · C552 NF_1nF C182 · C553 NF_1nF C183 · C554 NF_1nF C184 · C555 NF_1nF C185 · C556 NF_1nF C186 · C557 NF_1nF C187 · C558 NF_1nF C188 · C559 NF_1nF C189 · C560 NF_1nF C190 · C561 NF_1nF C191 · C562 NF_1nF C192 · C563 NF_1nF C193 · C564 NF_1nF C194 · C565 NF_1nF C195 · C566 NF_1nF C196 · C567 NF_1nF C197 · C568 NF_1nF C198 · C569 NF_1nF C199 · C570 NF_1nF C200 · C571 NF_1nF C201 · C572 NF_1nF C202 · C573 NF_1nF C203 · C574 NF_1nF C204 · C575 NF_1nF C205 · C576 10nF · C577 10nF · C578 10nF · C579 10nF · C580 10nF · C581 10nF · C582 10nF · C583 0R_NF · C584 0R_NF · C585 0R_NF · C586 0R_NF · C587 0R_NF · C588 0R_NF · C589 0R_NF · C590 0R_NF · C591 0R_NF · C592 0R_NF · C593 0R_NF · C594 0R_NF · C595 0R_NF ·

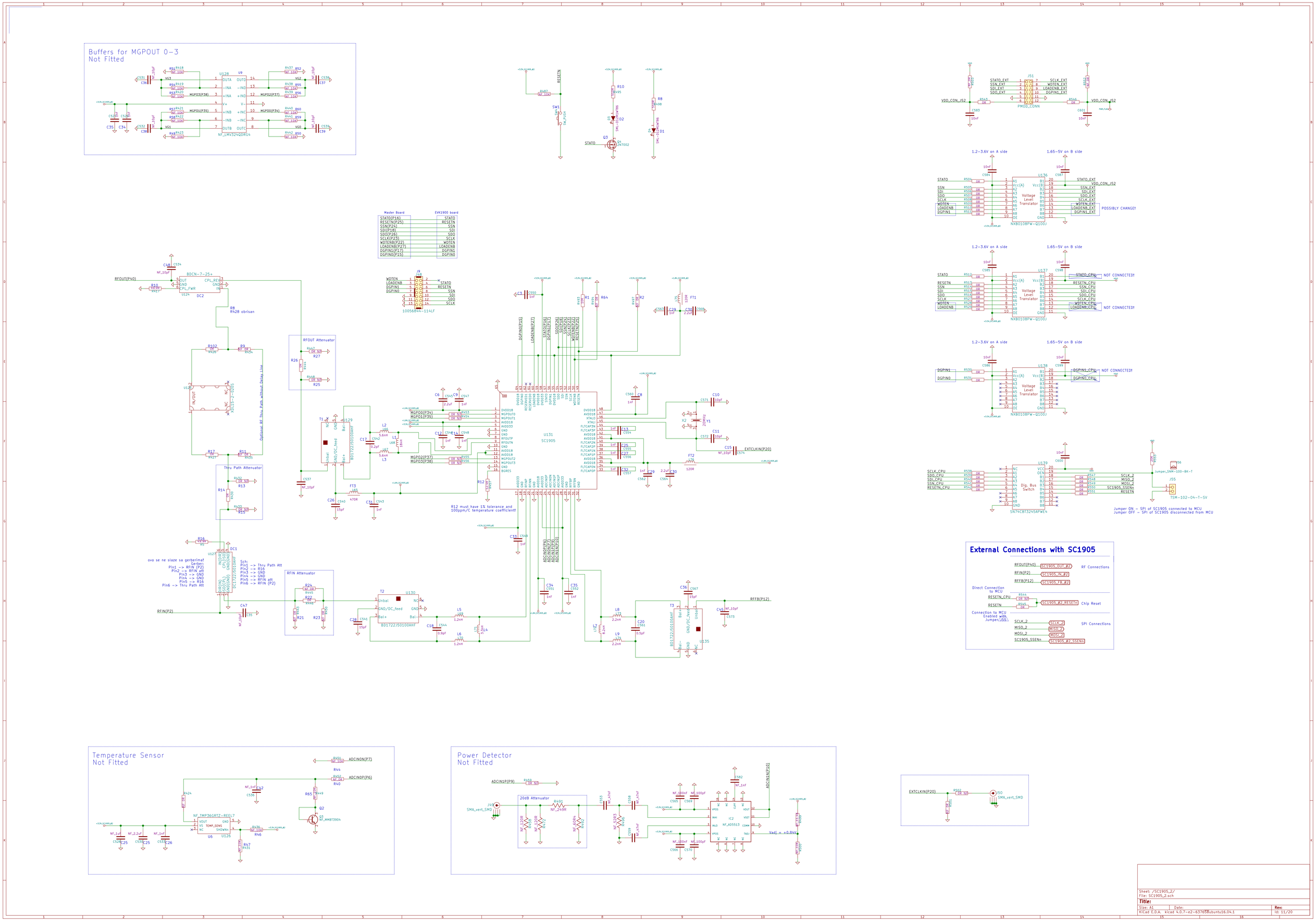

Buffers for MGPOUT 0-3
Not Fitted
Master Board
EVK1900 board
STATO(P16) STATO
RESETN(P25) RESETN
SSN(P24) SSN
SDI(P18) SDI
SDO(P26) SDO
SCLK(P23) SCLK
WDTEN(P22) WDTEN
LOADENB(P27) LOADENB
DGPIN1(P17) DGPIN1
DGPIN0(P15) DGPIN0
1.2-3.6V on A side
1.65-5V on B side
POSSIBLY CHANGE!
NOT CONNECTED!
Voltage Level Translator
Dig. Bus Switch
Jumper ON - SPI of SC1905 connected to MCU
Jumper OFF - SPI of SC1905 disconnected from MCU
External Connections with SC1905
RF Connections
Direct Connection to MCU
Chip Reset
Connection to MCU Enabled with Jumper/J55
SPI Connections
Temperature Sensor
Not Fitted
Power Detector
Not Fitted
20dB Attenuator
Vadj = +0.84V
Sheet: /SC1905_2/
File: SC1905_2.sch
Title:
Size: A1
Date:
Rev:
KiCad E.D.A. kicad 4.0.7-e2-6376580ubuntu16.04.1
Id: 11/20

SKY13373-460LF vdd=3.3, vctrl=1.8, iso=20, il=0.6
SKYA21003 vdd=3.3+vctrl=1.8, iso=24, il=0.5
SKY13330-397LF ist ko skya21003

Pull-Ups for Variable Attenuators in Observation Path

PA A or B Selection Switches Control

TDD SWITCHES control

TDD PAs control

DAs control

TDD LNAs control

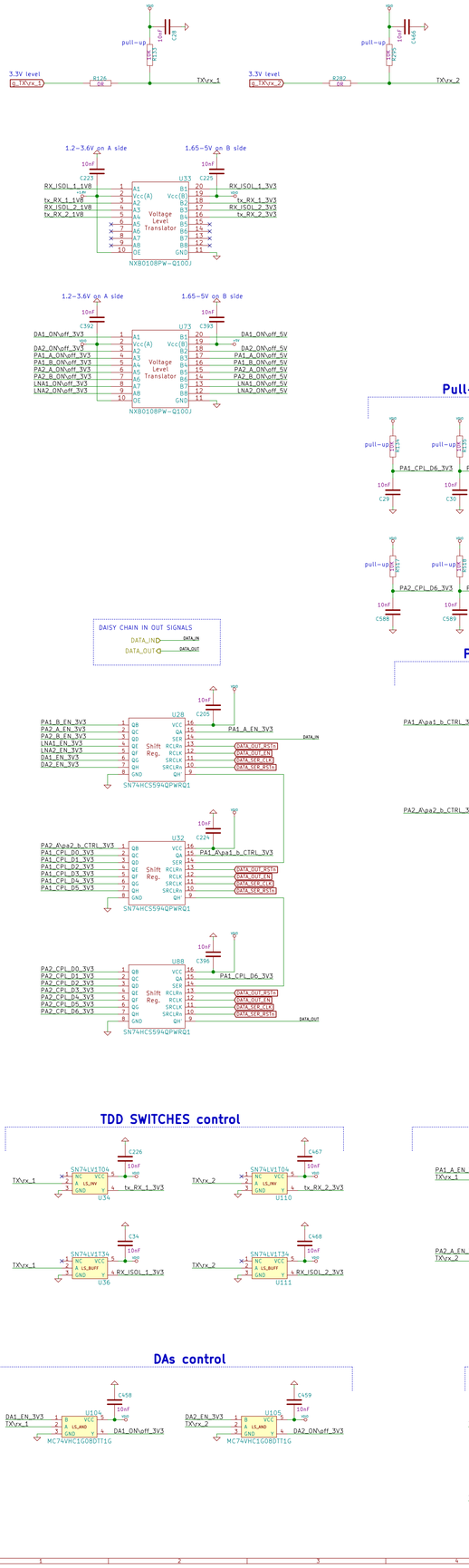

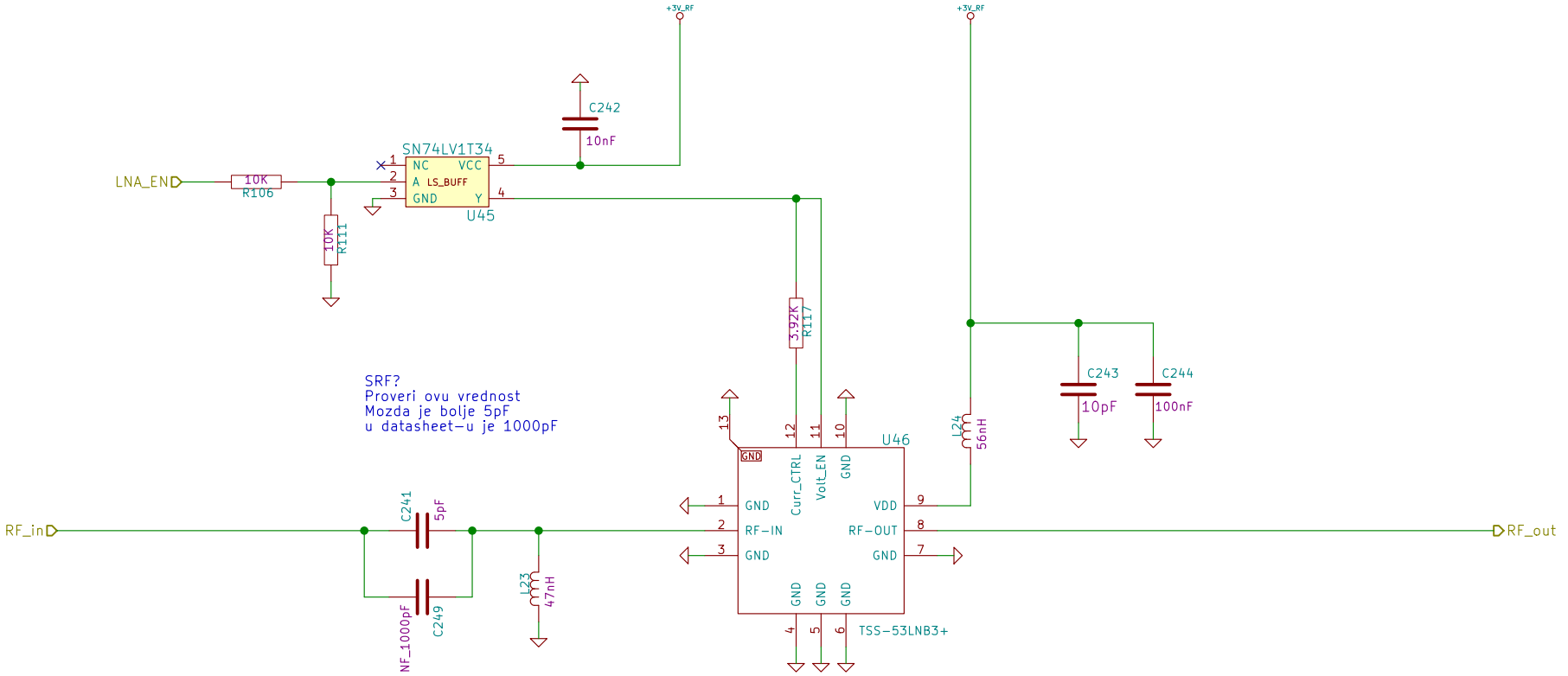

Lime Microsystems		
Sheet: /RF/LNA1/		
File: LNA1.sch		
Title: FrontEnd_5G		
Size: A4	Date: 10 Feb 2022	**Rev: 1v0**
KiCad E.D.A. kicad 4.0.7-e2-637658ubuntu16.04.1		Id: 13/20

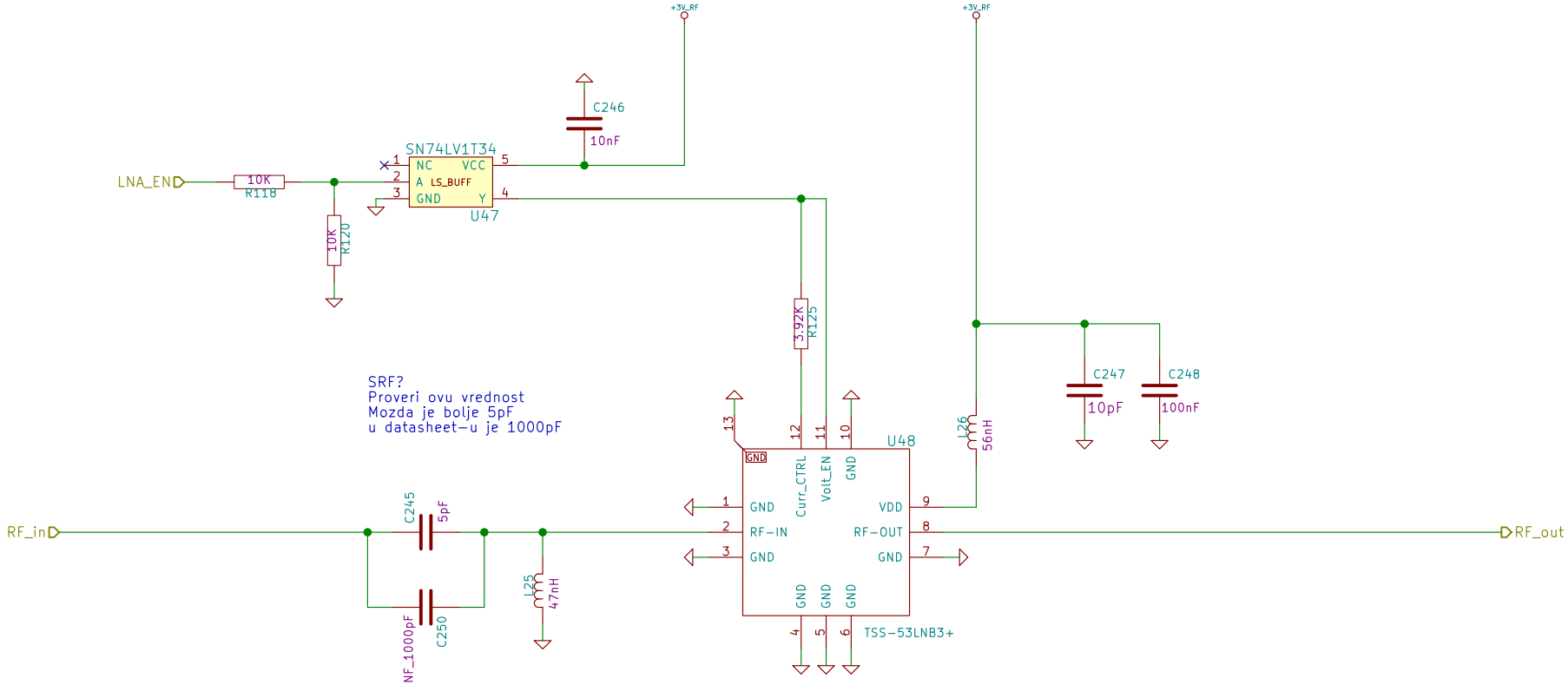

Lime Microsystems		
Sheet: /RF/LNA2/		
File: LNA2.sch		
Title: FrontEnd_5G		
Size: A4	Date: 10 Feb 2022	**Rev: 1v0**
KiCad E.D.A. kicad 4.0.7-e2-637658ubuntu16.04.1		Id: 14/20

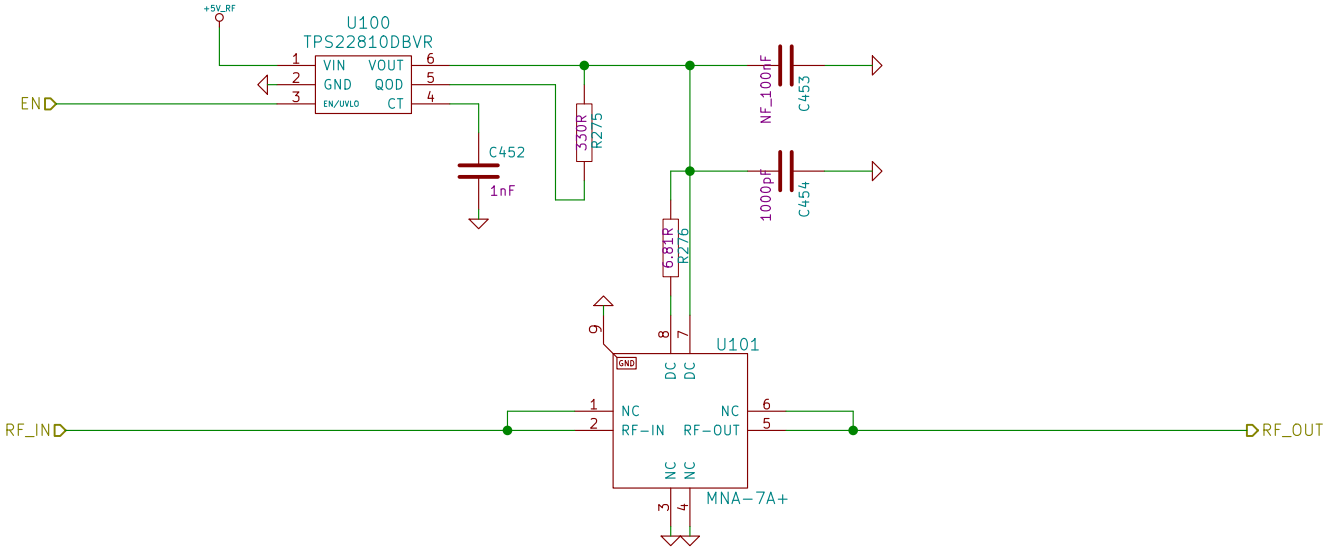

Lime Microsystems		
Sheet: /RF/DA1/		
File: DA1.sch		
Title: FrontEnd_5G		
Size: A4	Date: 10 Feb 2022	**Rev: 1v0**
KiCad E.D.A. kicad 4.0.7-e2-637658ubuntu16.04.1		Id: 15/20

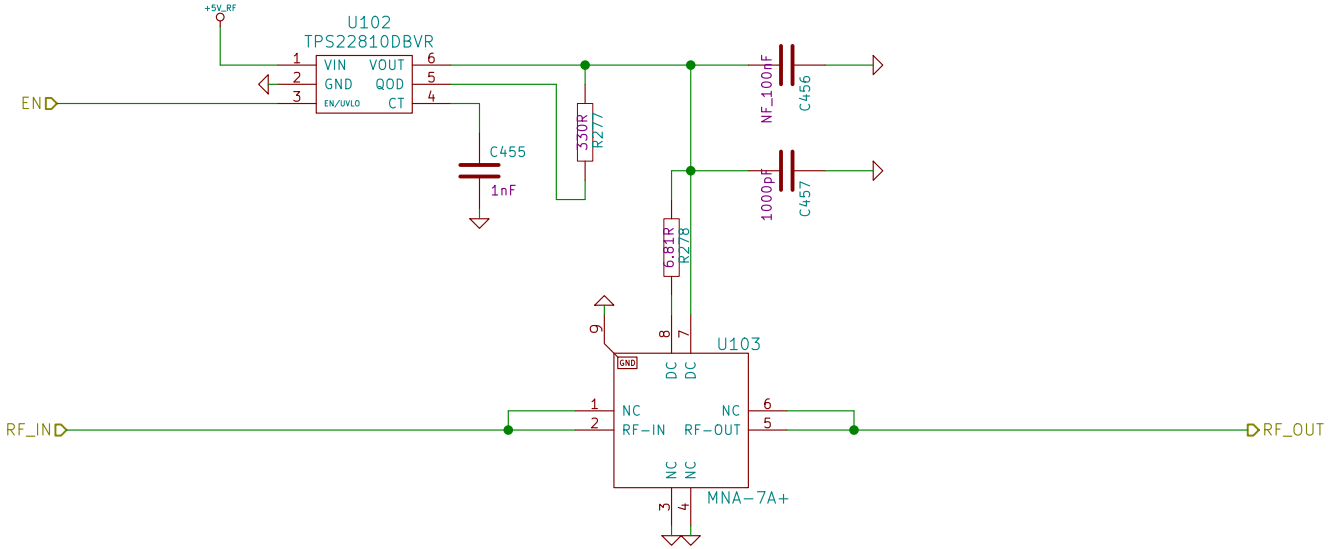

Lime Microsystems		
Sheet: /RF/DA2/		
File: DA2.sch		
Title: FrontEnd_5G		
Size: A4	Date: 10 Feb 2022	**Rev: 1v0**
KiCad E.D.A. kicad 4.0.7-e2-637658ubuntu16.04.1		Id: 16/20

Datasheet Substrate:
Rogers4350B, Er=3.66, tickness = 254 um (10mil)
PCB was modified for substrate:
Rogers4350B, Er=3.66, tickness = 508 um (20mil)

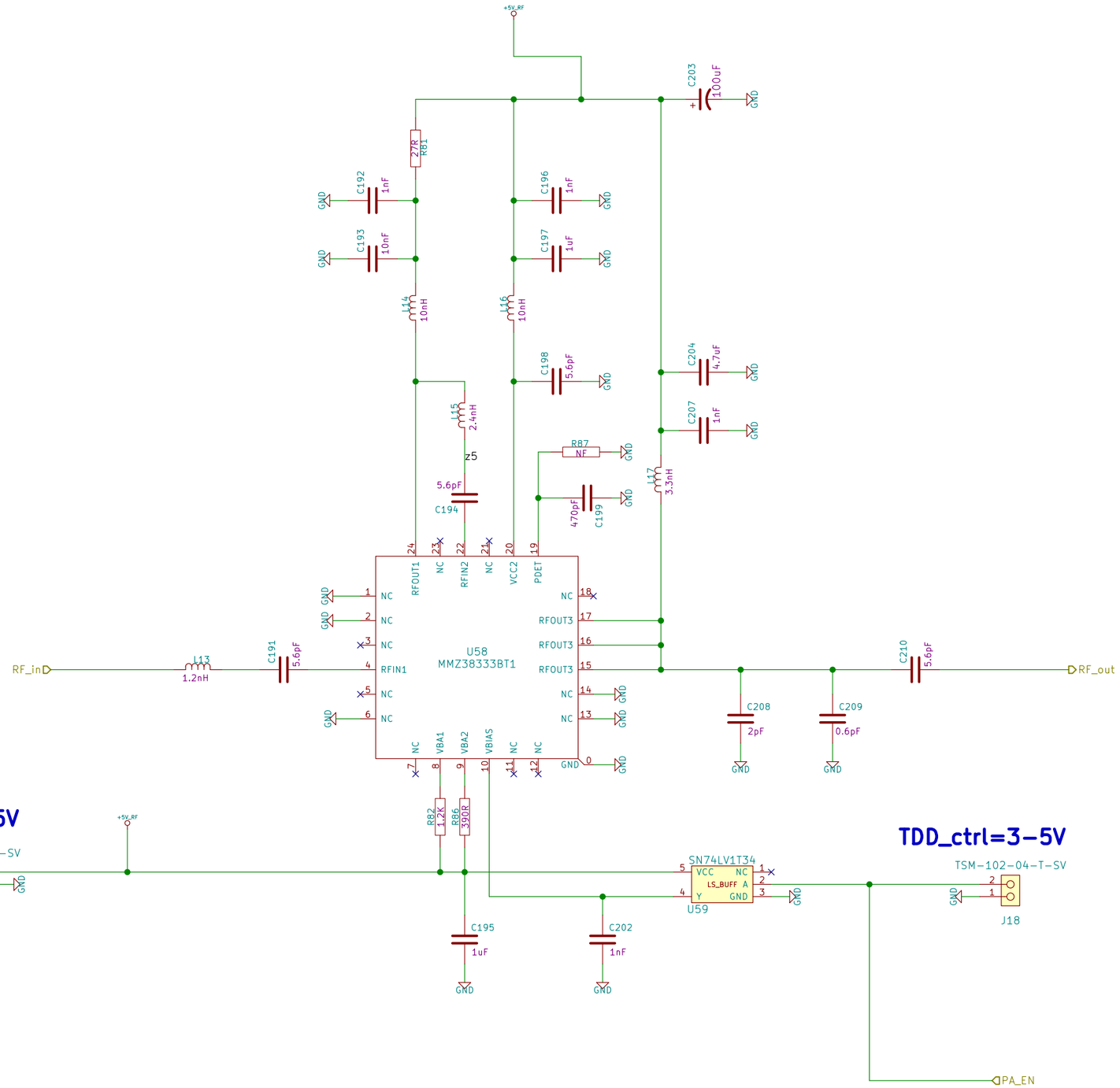

Lime Microsystems		
Sheet: /RF/PA1_A/		
File: PA1_A.sch		
Title: FrontEnd_5G		
Size: A3	Date: 10 Feb 2022	**Rev: 1v0**
KiCad E.D.A. kicad 4.0.7-e2-637658ubuntu16.04.1		Id: 17/20

Vcc=5V

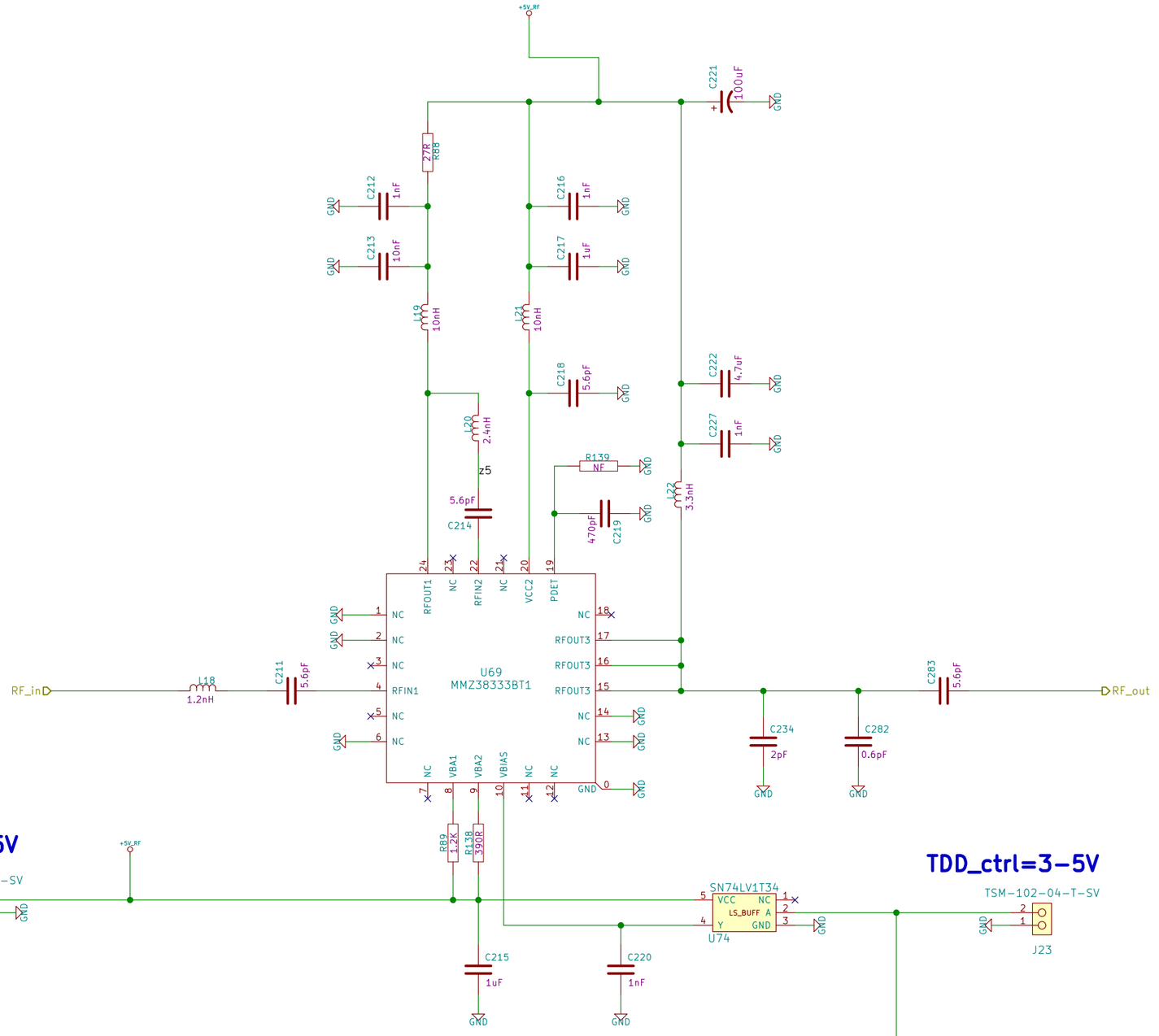

Datasheet Substrate:
Rogers4350B, Er=3.66, tickness = 254 um (10mil)
PCB was modified for substrate:
Rogers4350B, Er=3.66, tickness = 508 um (20mil)

Lime Microsystems		
Sheet: /RF/PA2_A/		
File: PA2_A.sch		
Title: FrontEnd_5G		
Size: A3	Date: 10 Feb 2022	**Rev: 1v0**
KiCad E.D.A. kicad 4.0.7-e2-637658ubuntu16.04.1		Id: 18/20

Roger 4350B, Er = 3.66, tickness = 508 um (20 mil)

Vpd=1.8V

Vcc3/Vbias=5V

PA_IN

PA_OUT

Vcc1/Vcc2=5V

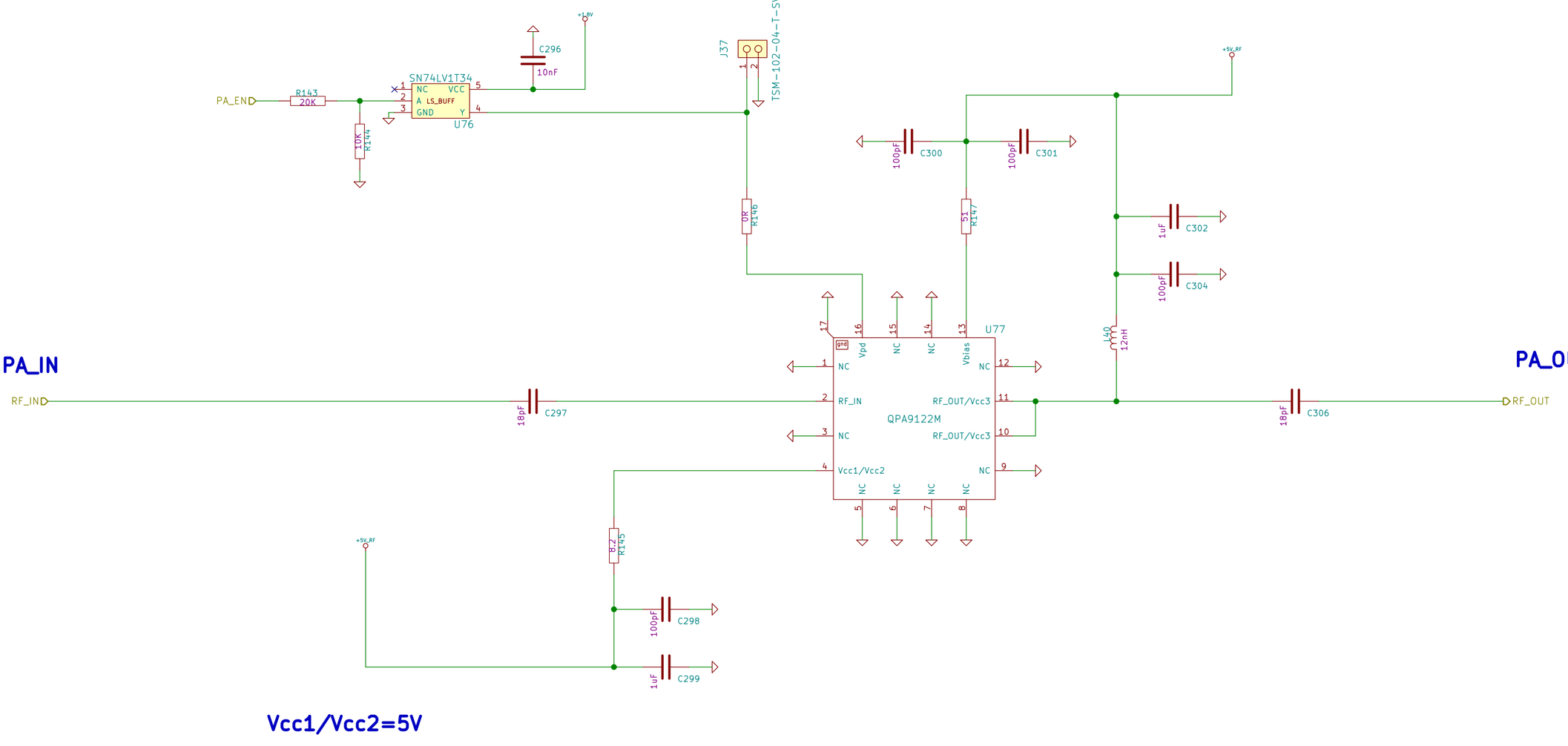

Lime Microsystems		
Sheet: /RF/PA1_B/		
File: PA1_B.sch		
Title: FrontEnd_5G		
Size: A3	Date: 10 Feb 2022	**Rev: 1v0**
KiCad E.D.A. kicad 4.0.7-e2-637658ubuntu16.04.1		Id: 19/20

Roger 4350B, Er = 3.66, tickness = 508 um (20 mil)

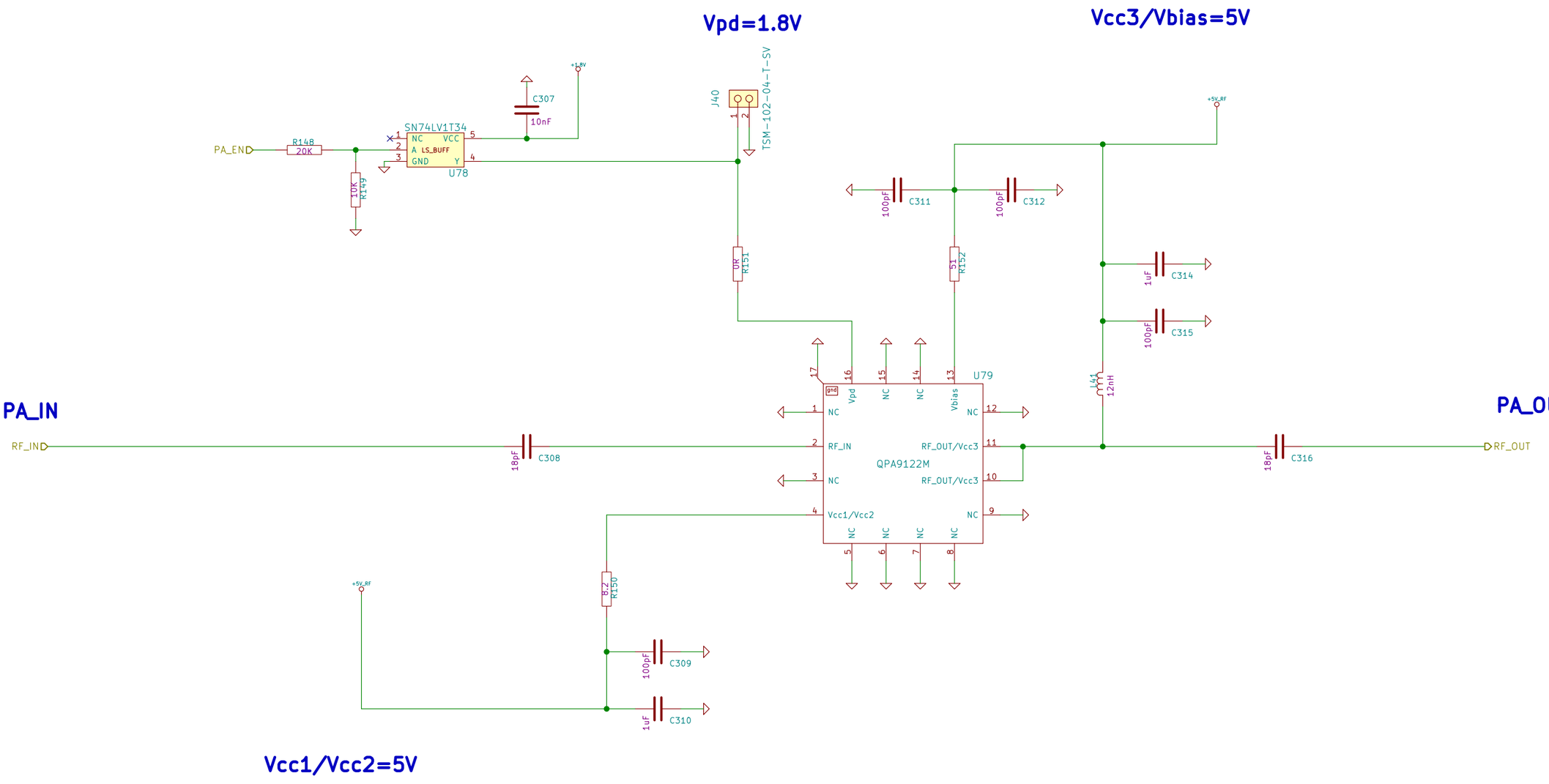

Lime Microsystems		
Sheet: /RF/PA2_B/		
File: PA2_B.sch		
Title: FrontEnd_5G		
Size: A3	Date: 10 Feb 2022	**Rev: 1v0**
KiCad E.D.A. kicad 4.0.7-e2-637658ubuntu16.04.1		Id: 20/20