Block diagram

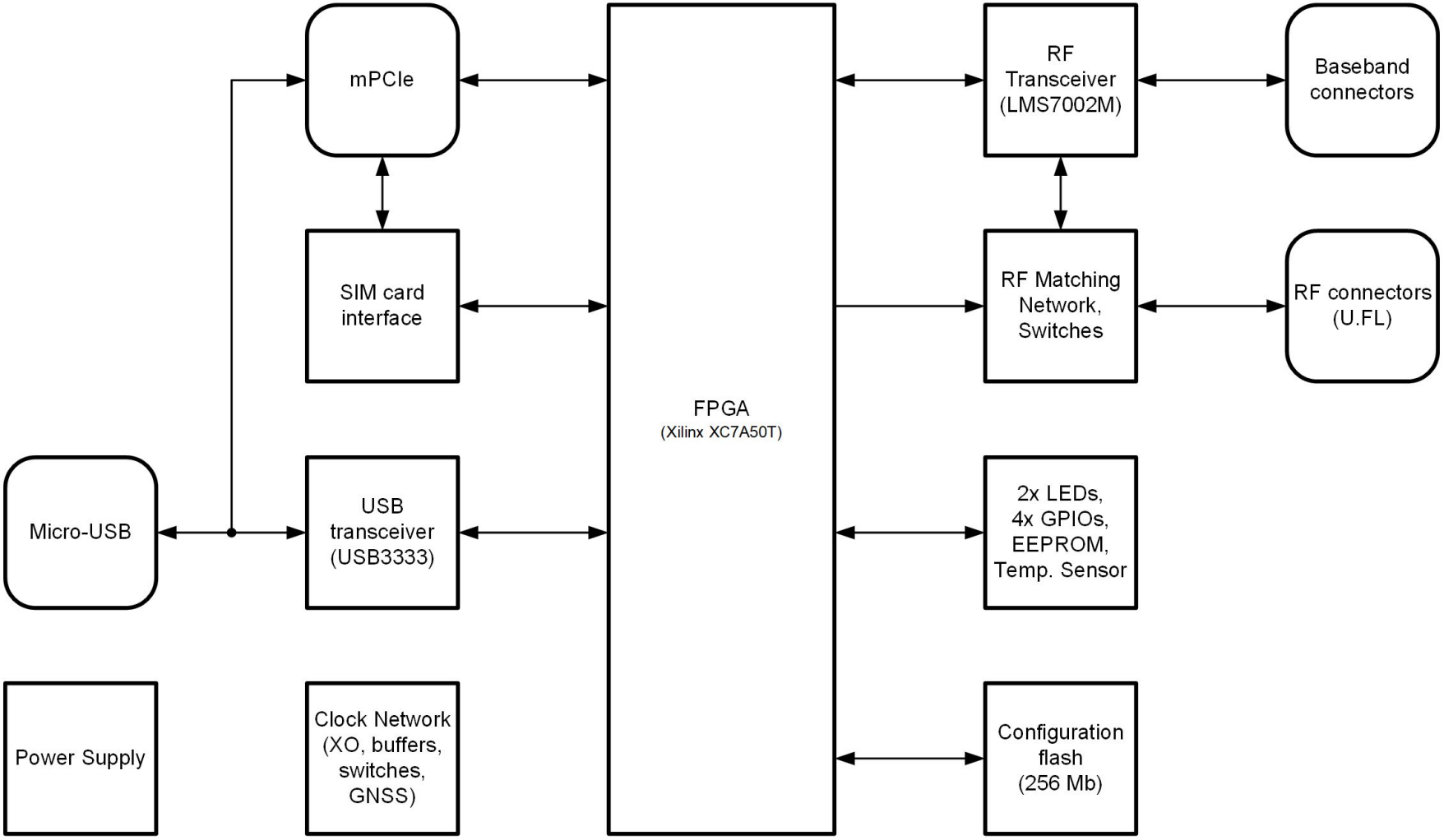

Project name: *LimeSDR-XTRX_1v2.PrjPcb*			
Title: *Block diagram*		*Lime Microsystems* *Surrey Tech Centre* *Guildford GU2 7YG* *Surrey* *United Kingdom*	Lime microsystems
Size: A4	Revision: v1.2		
Date: 2023-11-17	Time: 17:06:34	Sheet 1 of 10	
File: 01_Block_Diagram.SchDoc			

Power diagram

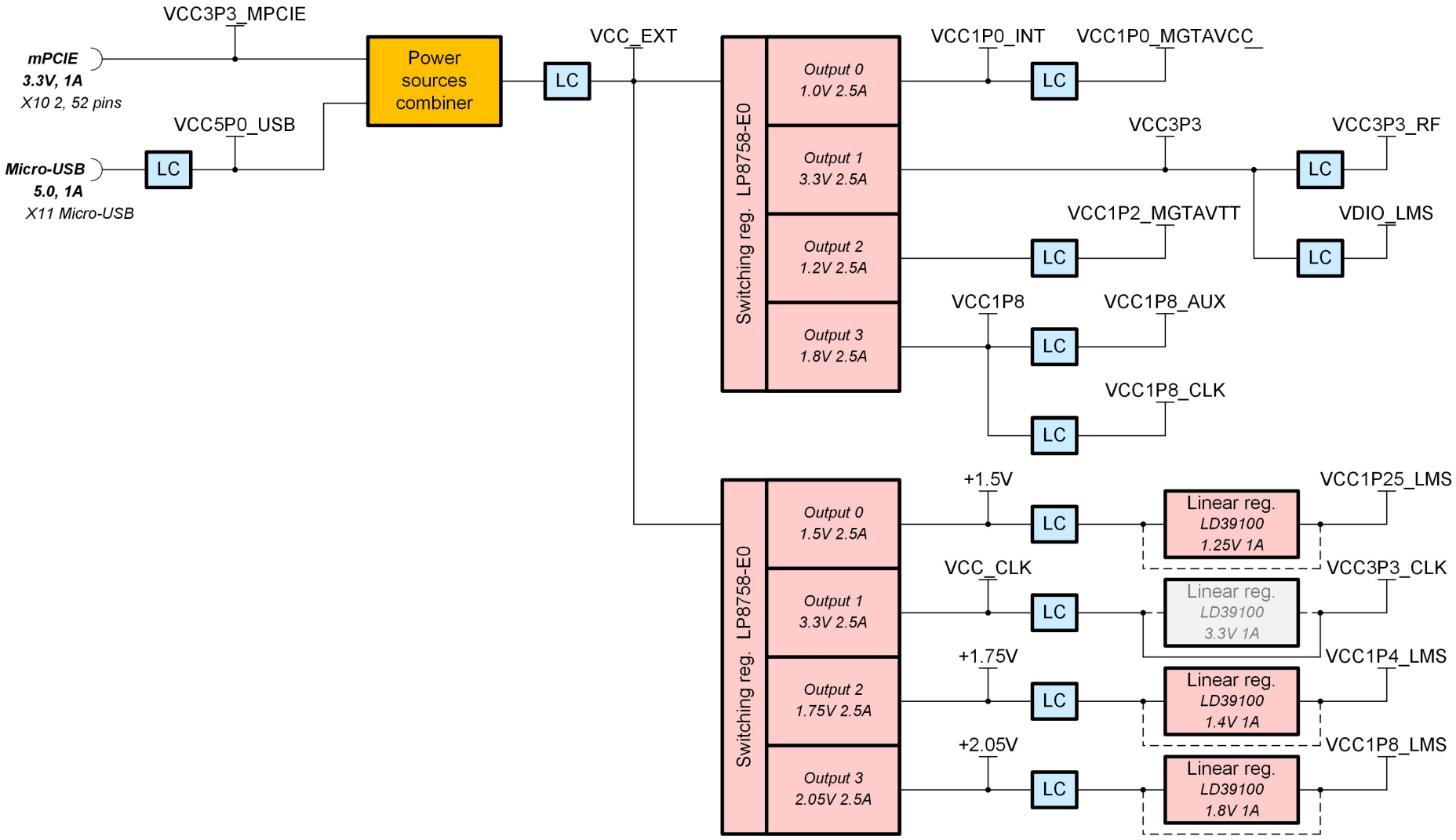

Project name: *LimeSDR-XTRX_1v2.PrjPcb*			
Title: *Power diagram*		*Lime Microsystems* *Surrey Tech Centre* *Guildford GU2 7YG* *Surrey* *United Kingdom*	Lime microsystems
Size: A4	Revision: v1.2		
Date: 2023-11-17	Time: 17:06:36	Sheet 2 of 10	
File: 02_Power_Diagram.SchDoc			

Clock diagram

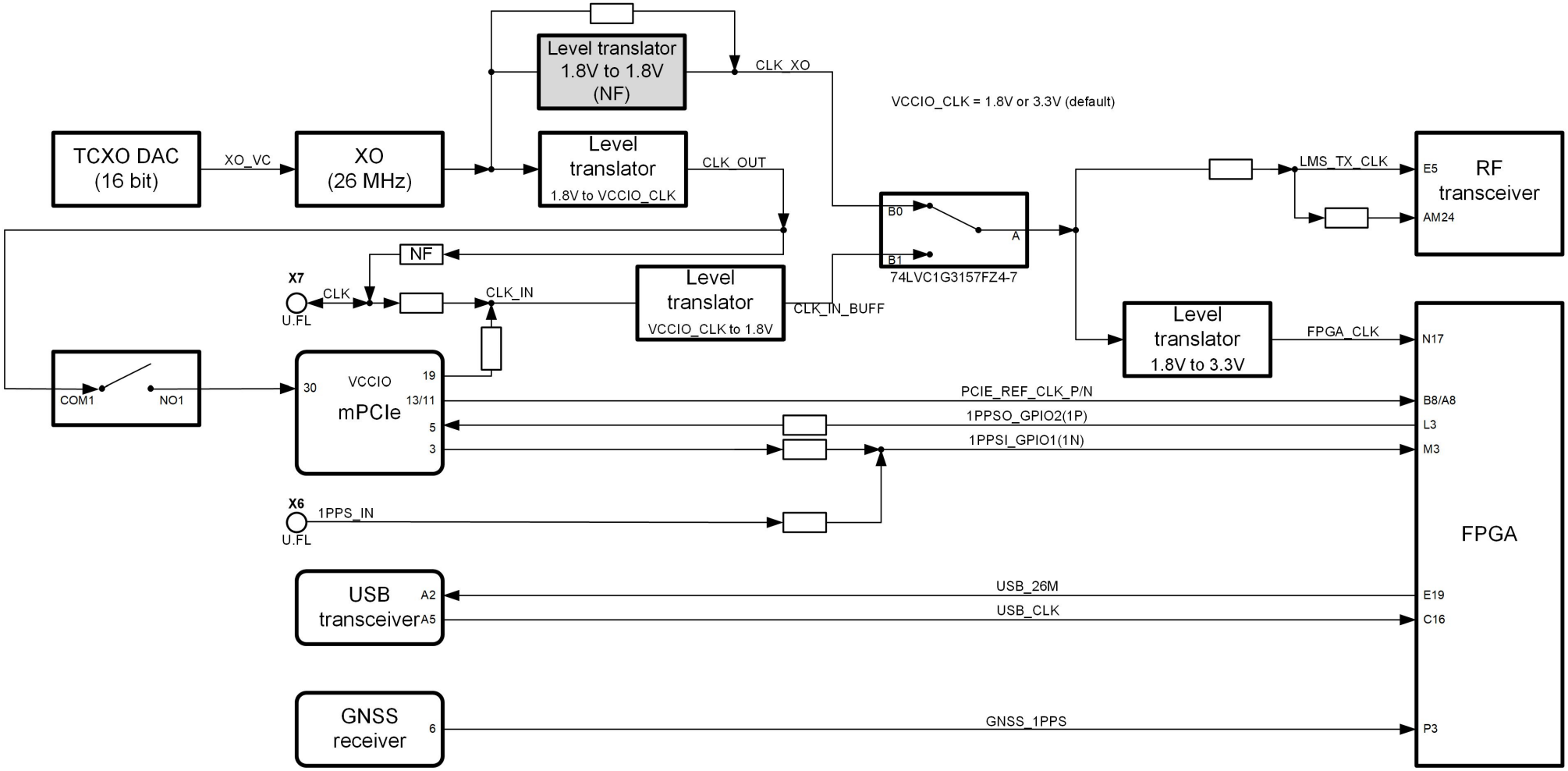

Project name: *LimeSDR-XTRX_1v2.PrjPcb*			
Title: *Clock diagram*		*Lime Microsystems* *Surrey Tech Centre* *Guildford GU2 7YG* *Surrey* *United Kingdom*	Lime microsystems
Size: A4	Revision: v1.2		
Date: 2023-11-17	Time: 17:06:37	Sheet 3 of 10	
File: 03_Clock_Diagram.SchDoc			

RF diagram

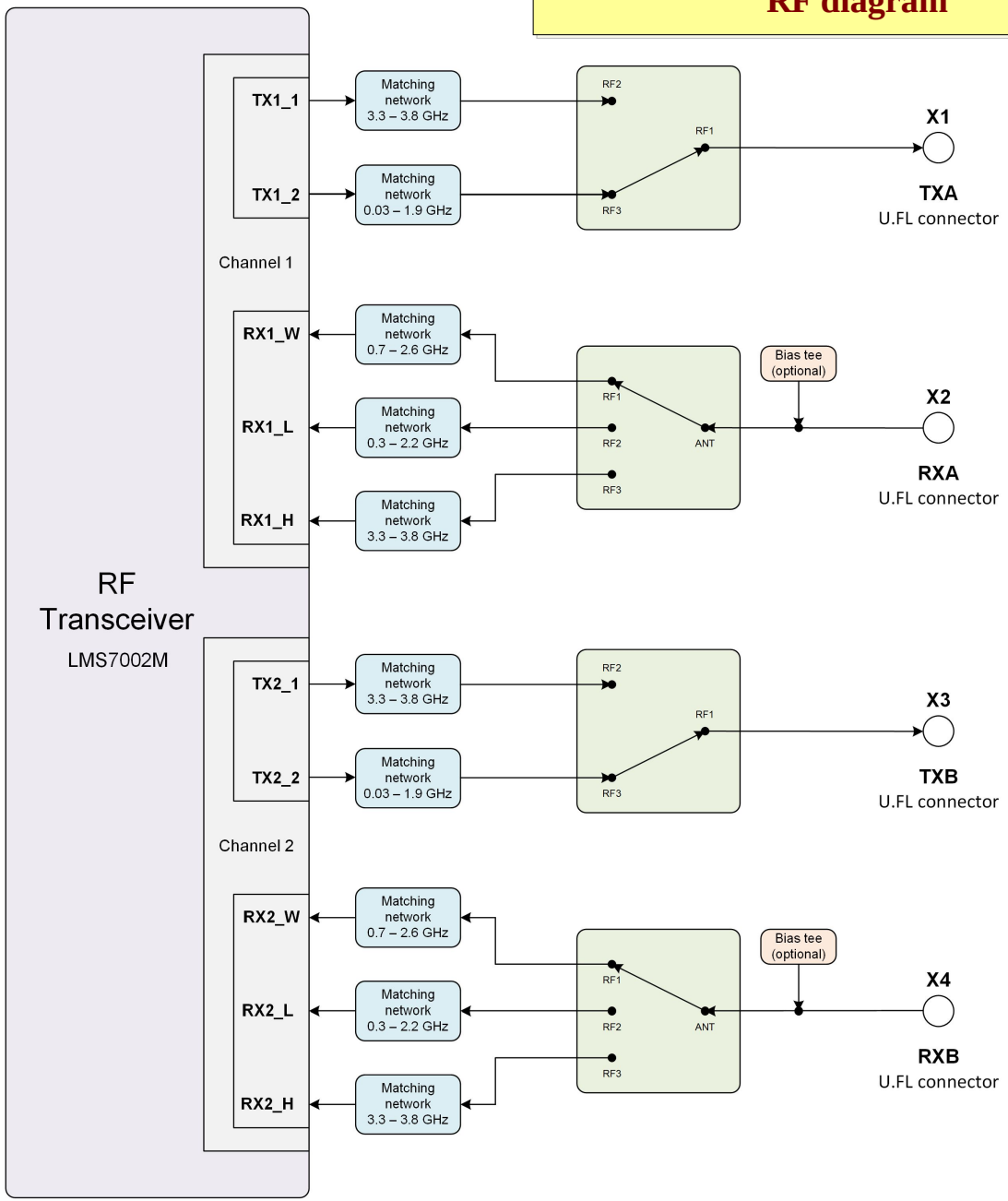

Project name: *LimeSDR-XTRX_1v2.PrjPcb*			
Title: *RF diagram*		*Lime Microsystems* *Surrey Tech Centre* *Guildford GU2 7YG* *Surrey* *United Kingdom*	Lime microsystems
Size: A4	Revision: v1.2		
Date: 2023-11-17	Time: 17:06:39	Sheet 4 of 10	
File: 04_RF_Diagram.SchDoc			

NF elements on sheet: IC2
Number of NF elements on sheet: 1

LMS7002M misc

LMS7002M digital circuit

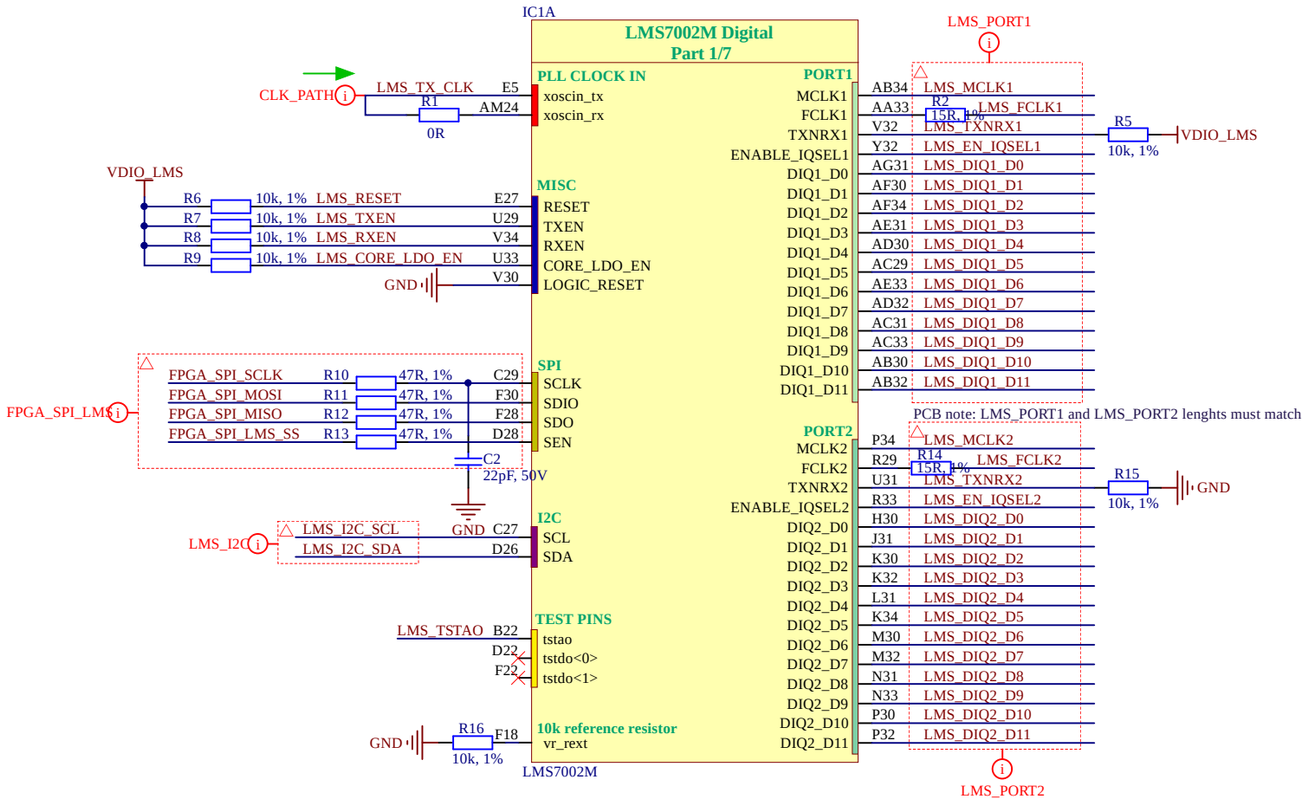

LMS EEPROM

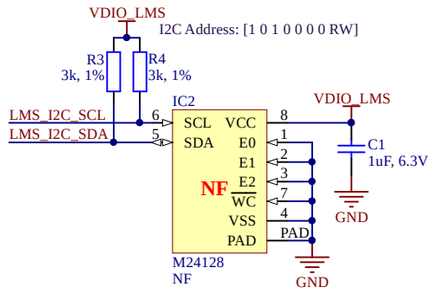

Baseband external IO

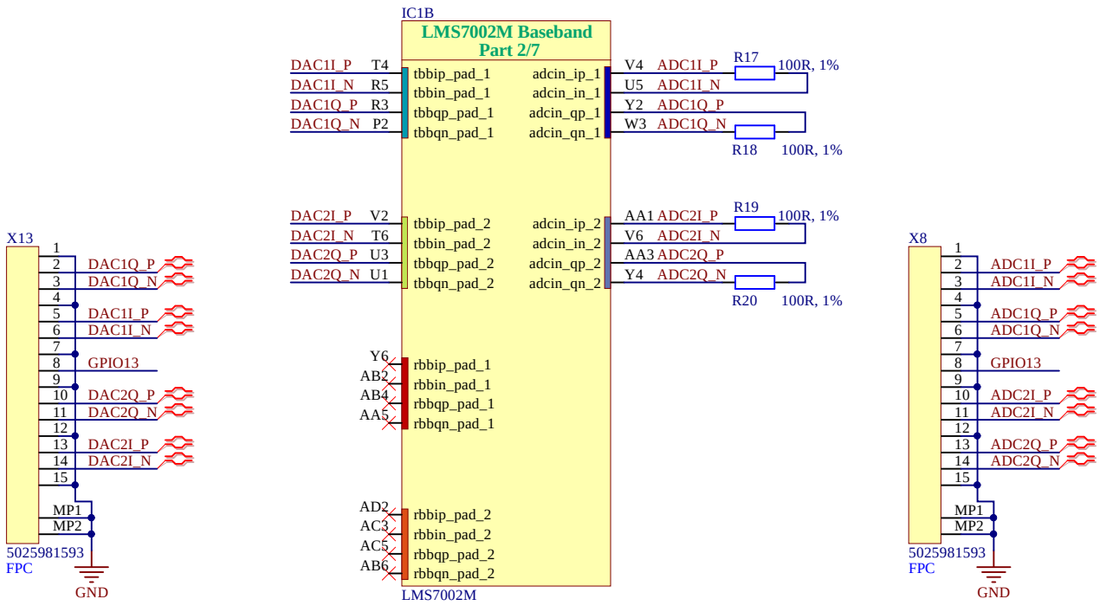

Mechanical components

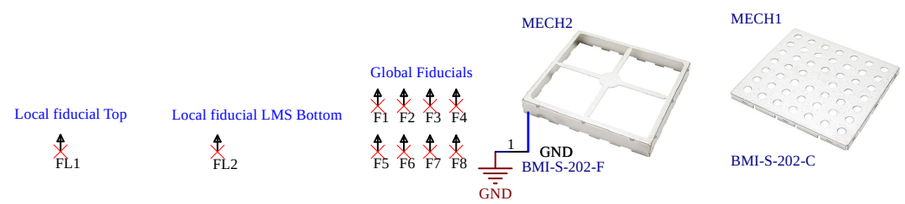

Project name: *LimeSDR-XTRX_1v2.PrjPcb*			
Title: *LMS7002M misc*		*Lime Microsystems* *Surrey Tech Centre* *Guildford GU2 7YG* *Surrey* *United Kingdom*	Lime microsystems
Size: A3	Revision: v1.2		
Date: 2023-11-17	Time: 17:06:41	Sheet5 of 10	
File: 05_LMS7002M_Misc.SchDoc			

NF elements on sheet: MN7, MN8, MN9, MN10, MN23, MN25, MN31, MN32, MN33, MN34, MN39, MN40, MN41, MN42, MN53, MN54, ESD1, ESD2, ESD3, ESD4
Number of NF elements on sheet: 20

LMS7002M RF circuits

LMS RF Channel 1

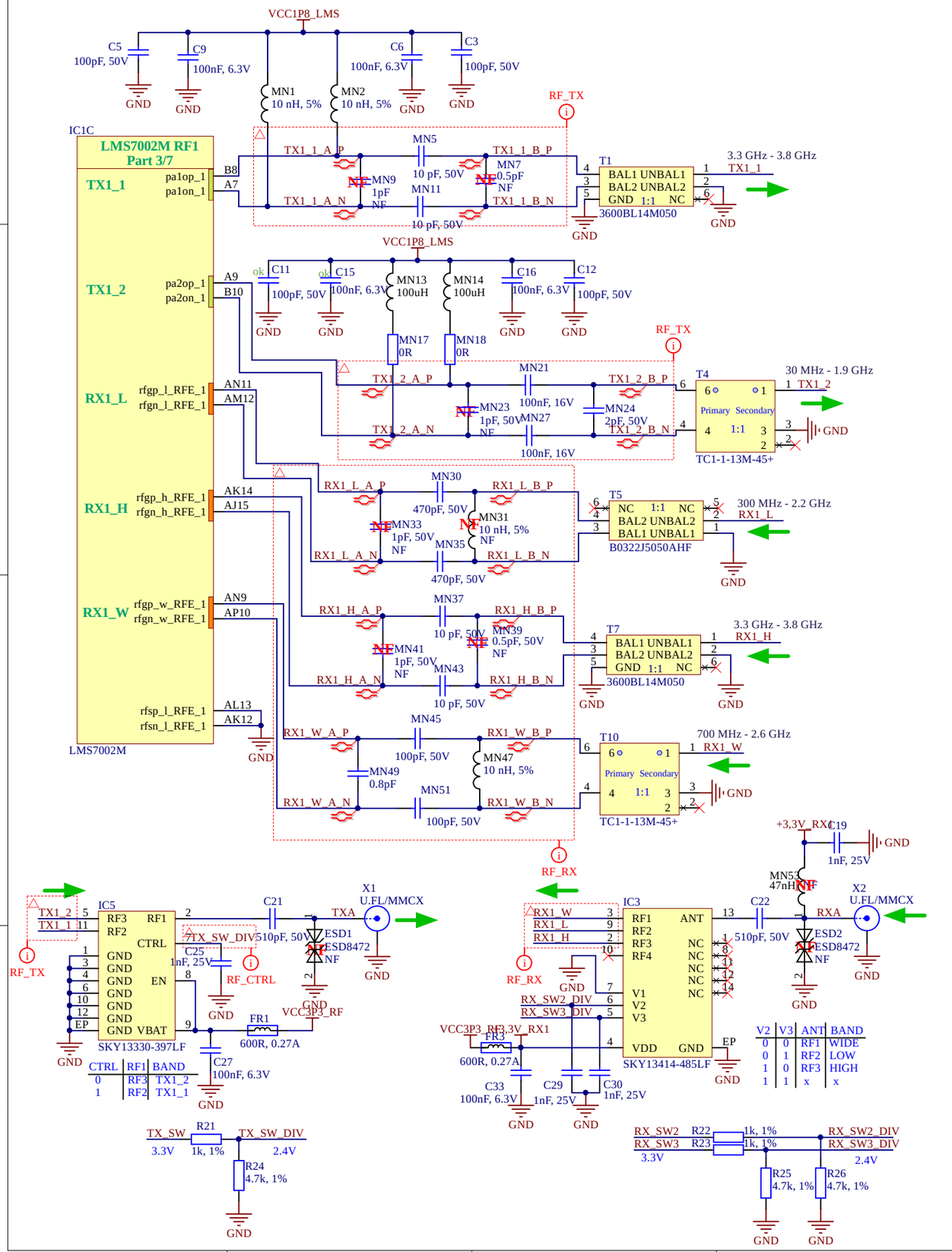

LMS RF Channel 2

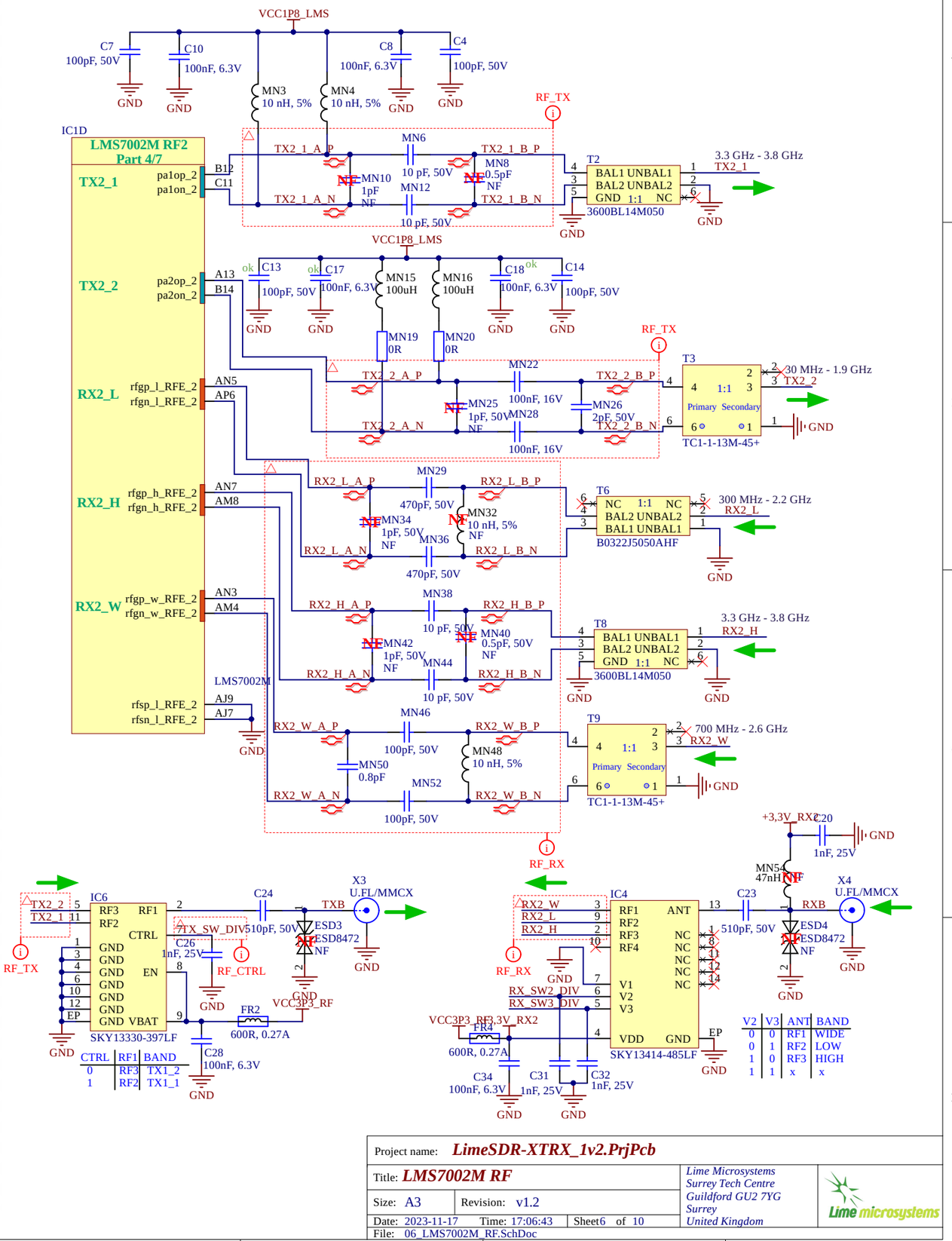

Project name:	LimeSDR-XTRX_1v2.PrjPcb		
Title:	LMS7002M RF	Lime Microsystems Surrey Tech Centre Guildford GU2 7YG Surrey United Kingdom	Lime microsystems
Size: A3	Revision: v1.2		
Date: 2023-11-17	Time: 17:06:43	Sheet6 of 10	
File: 06_LMS7002M_RF.SchDoc			

NF elements on sheet: -
Number of NF elements on sheet: 0

LMS7002M power supply circuit

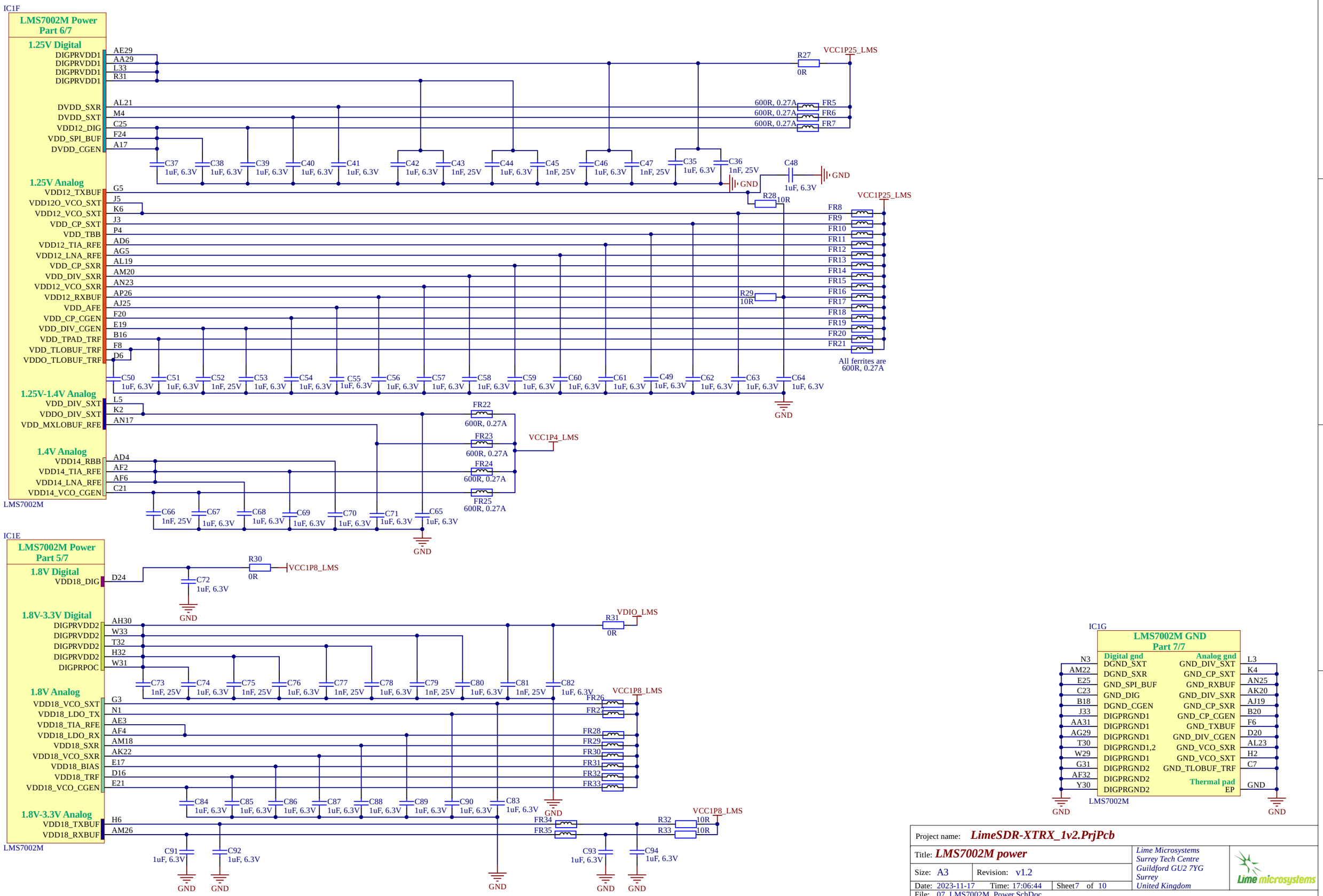

Project name: *LimeSDR-XTRX_1v2.PrjPcb*			
Title: *LMS7002M power*		*Lime Microsystems* *Surrey Tech Centre* *Guildford GU2 7YG* *Surrey* *United Kingdom*	Lime microsystems
Size: A3	Revision: v1.2		
Date: 2023-11-17	Time: 17:06:44	Sheet7 of 10	
File: 07_LMS7002M_Power.SchDoc			

NF elements on sheet: X9,
Number of NF elements on sheet: 1

FPGA

FPGA Banks

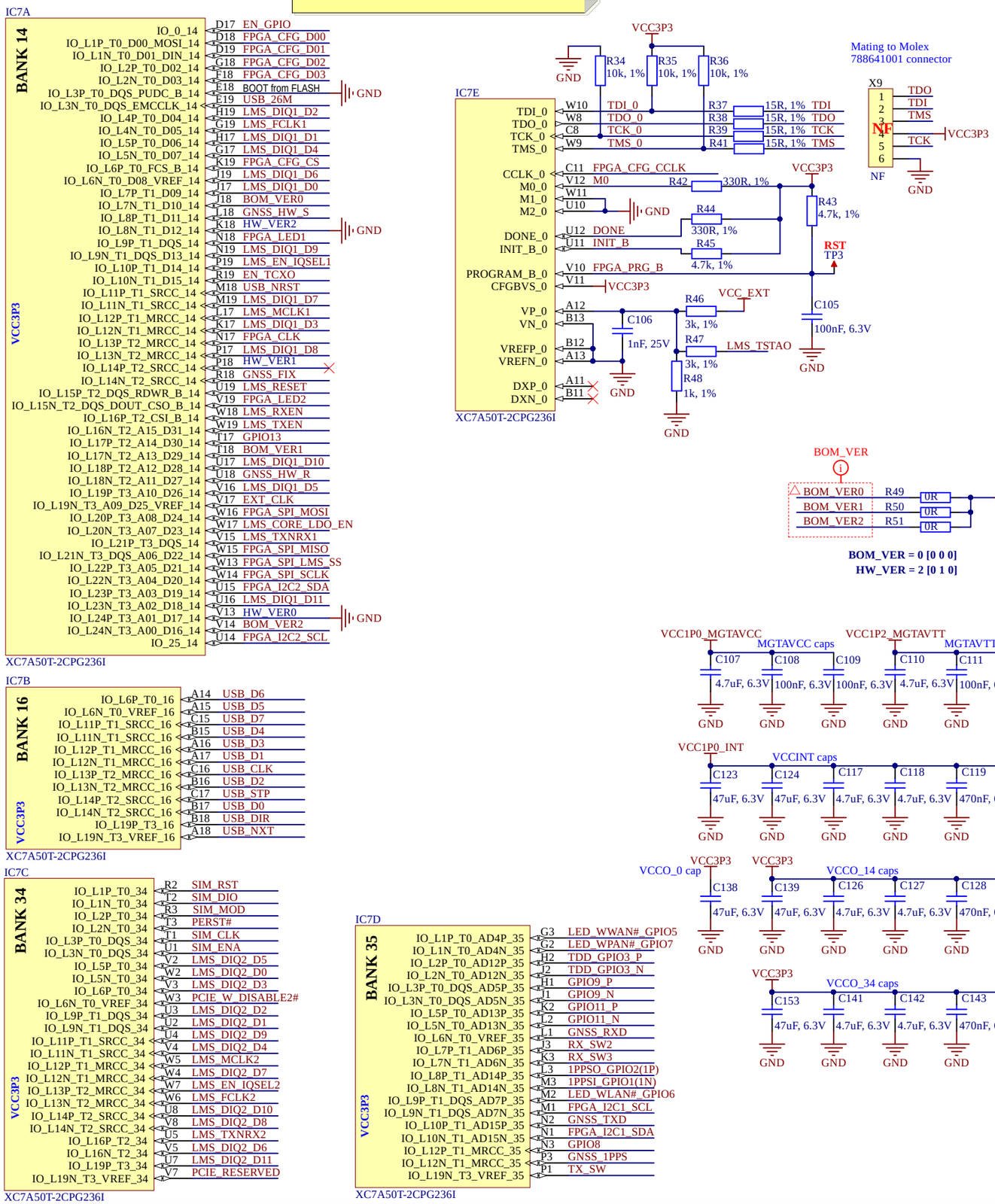

MGT transceivers

According to "Mini PCI Express Card Electromechanical Specification Revision 1.0" 37, 39, 41, 43, 45, 47, 49, 51 pins are reserved for future second PCI Express Lane. According to newer specifications, the second lane is not supported and 39, 41 pins are connected to +3.3Vaux. Since MGTPTX transceivers are not compatible with 3.3V voltage, but it is desired to have a second lane option, DC blocking capacitors are connected on all TX lines.

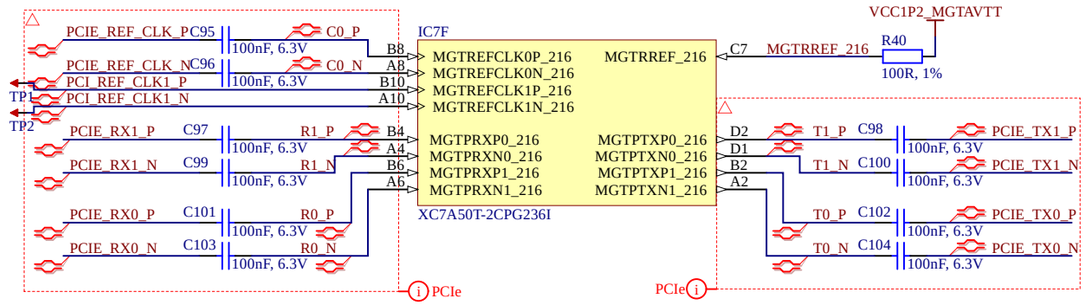

Power and decoupling

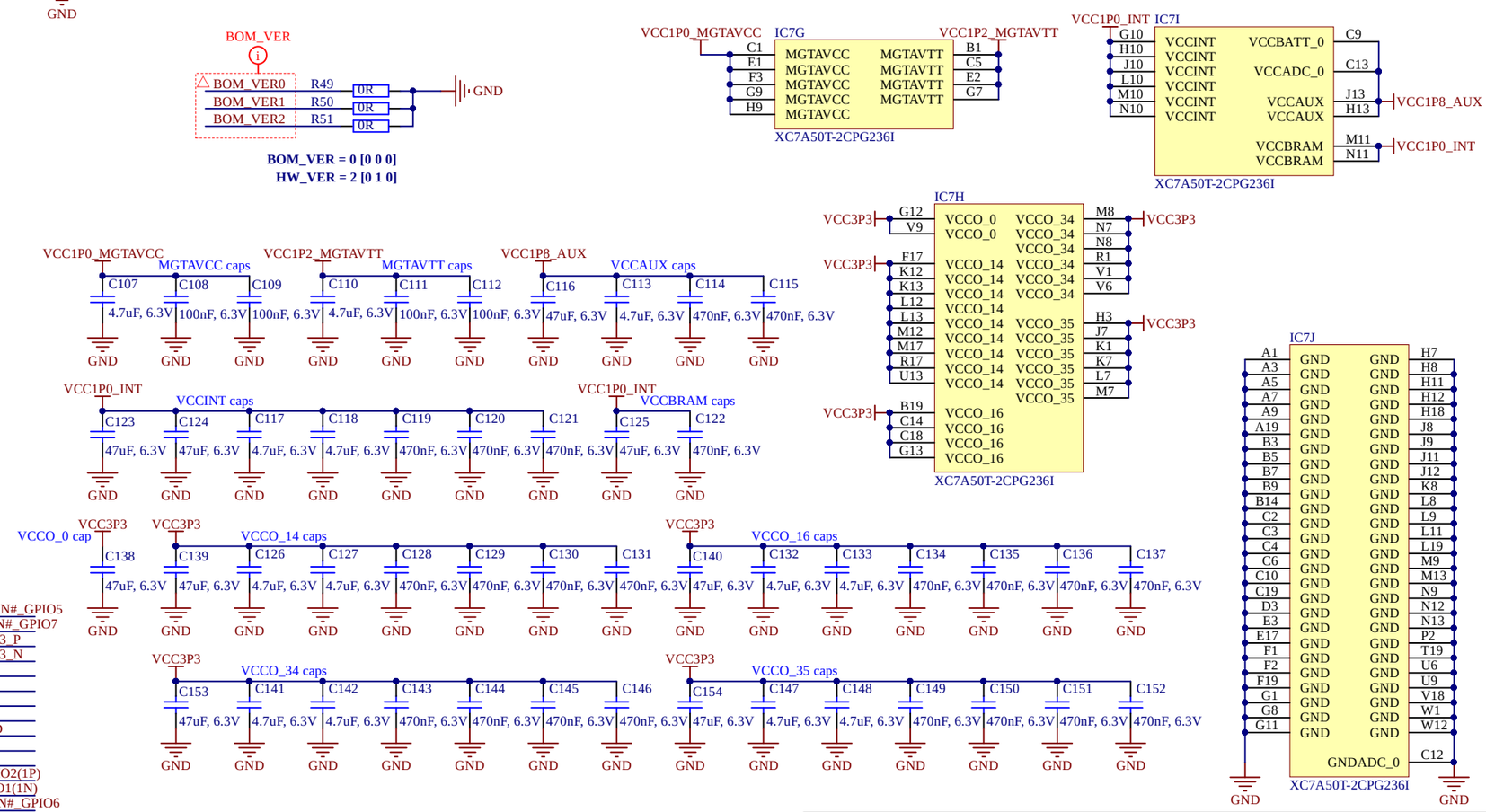

Project name: *LimeSDR-XTRX_1v2.PrjPcb*			
Title: *FPGA*		*Lime Microsystems* *Surrey Tech Centre* *Guildford GU2 7YG* *Surrey* *United Kingdom*	Lime microsystems
Size: A3	Revision: v1.2		
Date: 2023-11-17	Time: 17:06:46	Sheet8 of 10	
File: 08_FPGA.SchDoc			

NF elements on sheet: IC8, R55, ESD5, R56, R58, R59, R60, R67, R68, R70, R73, IC13, C174
Number of NF elements on sheet: 13

Misc

I2C Temperature sensor

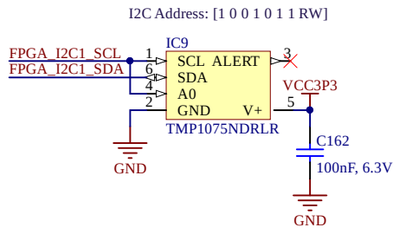

I2C EEPROM

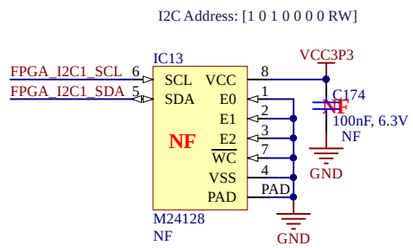

FPGA configuration Flash

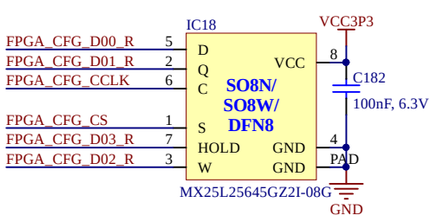

GNSS Receiver

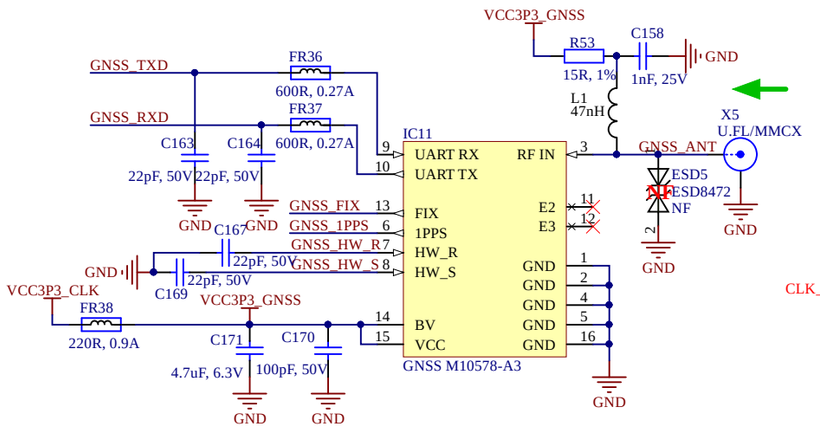

SIM card interface

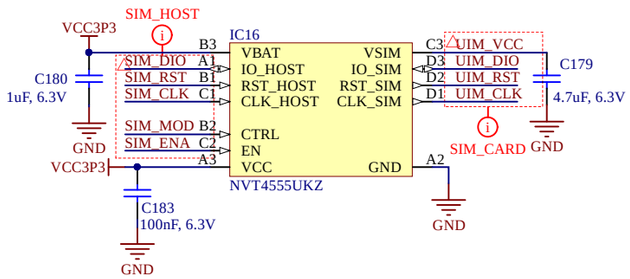

mPCIe

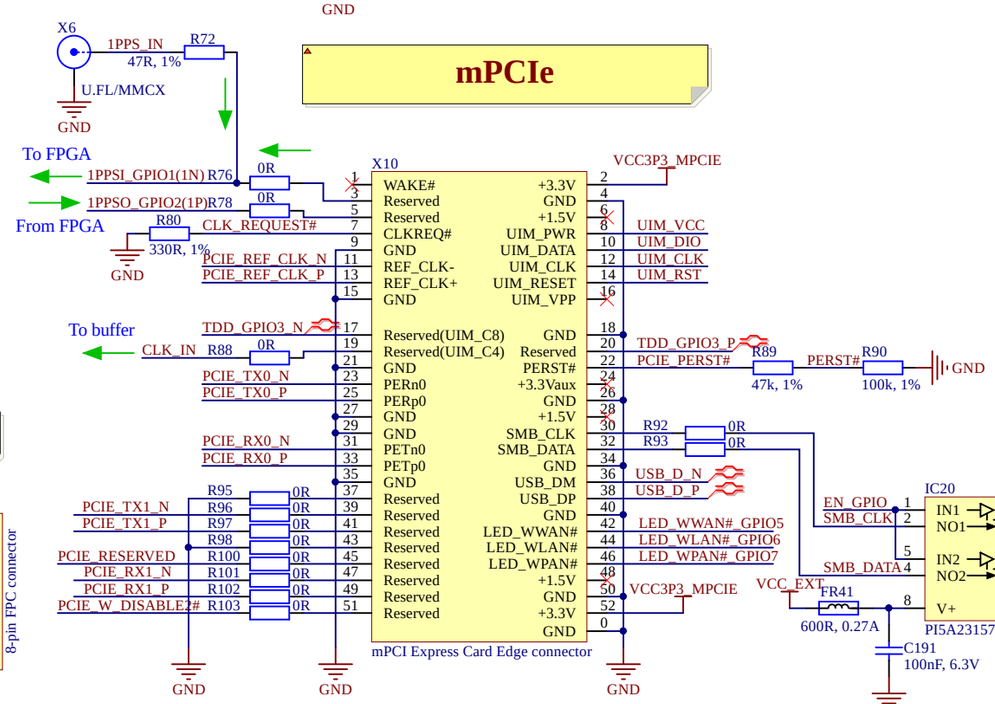

FPGA LEDs & GPIOs

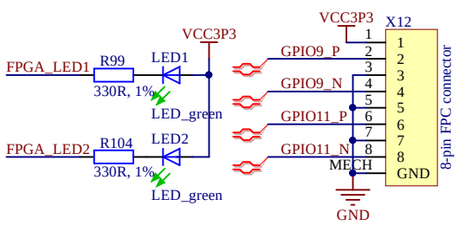

Clock

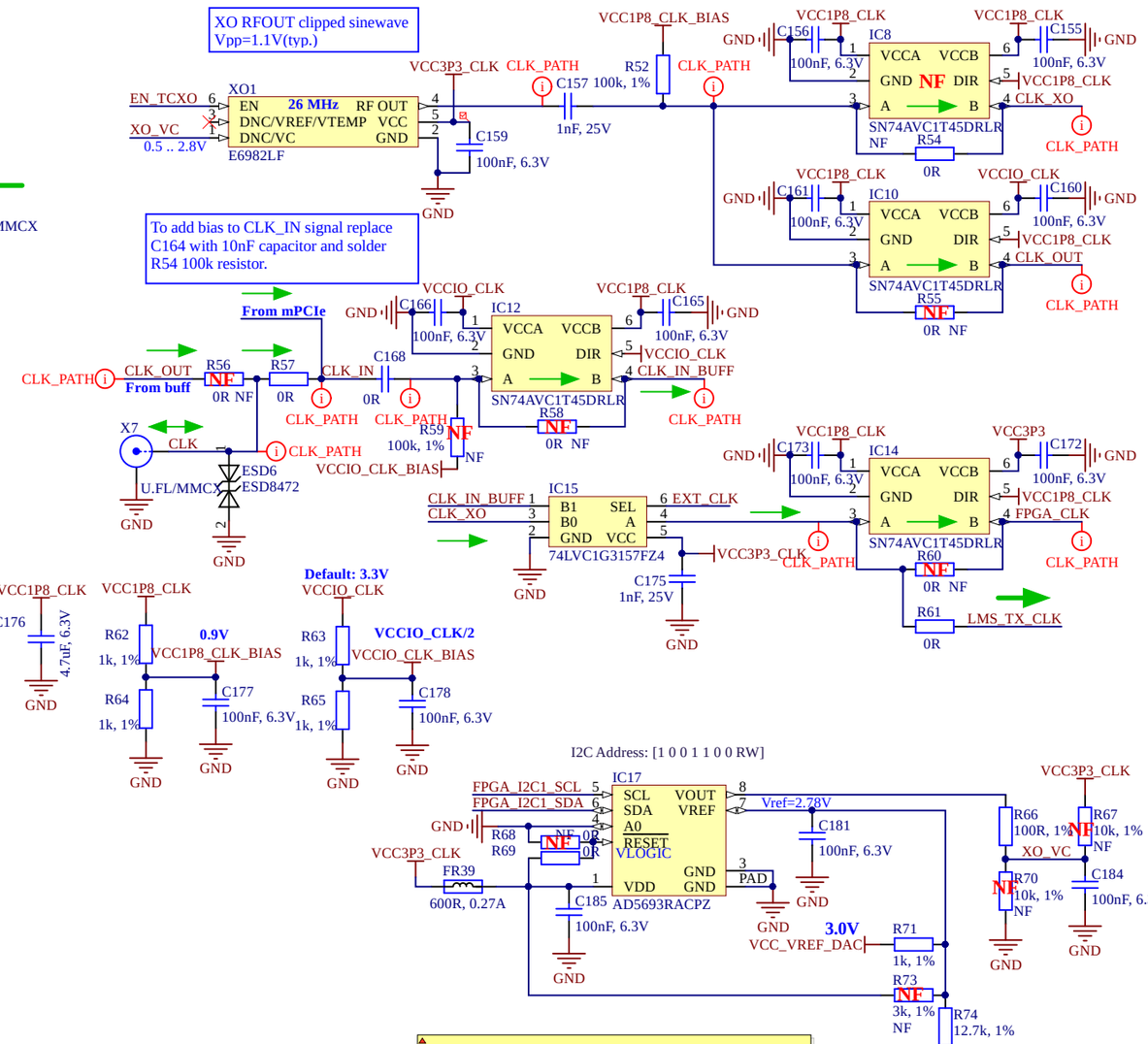

USB transceiver

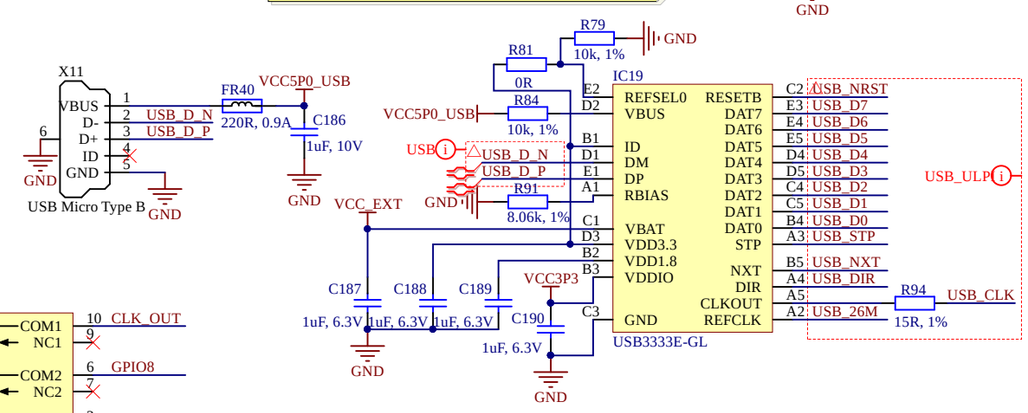

Project name:	LimeSDR-XTRX_1v2.PrjPcb
Title:	Misc
Size: A3	Revision: v1.2
Date: 2023-11-17	Time: 17:06:49
Sheet 10 of 10	
File: 09_Misc.SchDoc	

Lime Microsystems
Surrey Tech Centre
Guildford GU2 7YG
Surrey
United Kingdom

NF elements on sheet: R107, C198, R108, C208, R115, C214, IC32, R122, R123, C223, FR53, C228, R125, R114, IC25, IC27, IC30
Number of NF elements on sheet: 17
Number of NF elements on all sheets: 52

Board power circuits

Power input

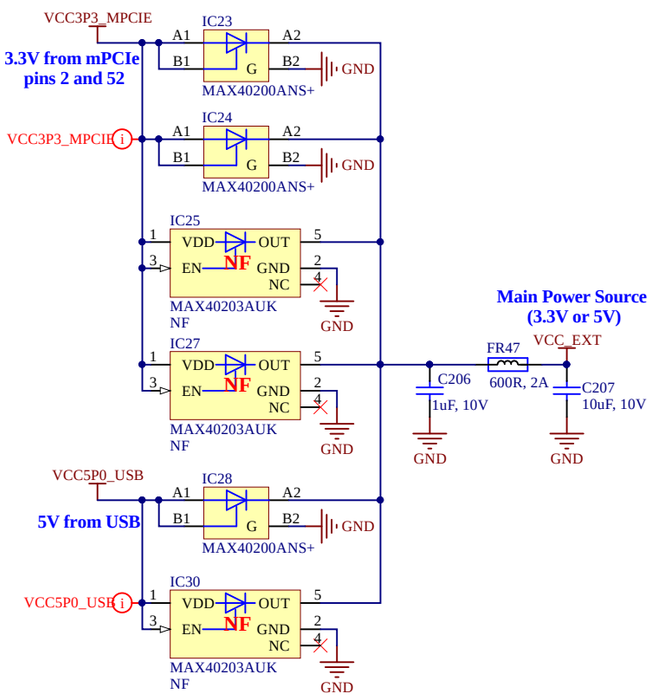

Switching regulators

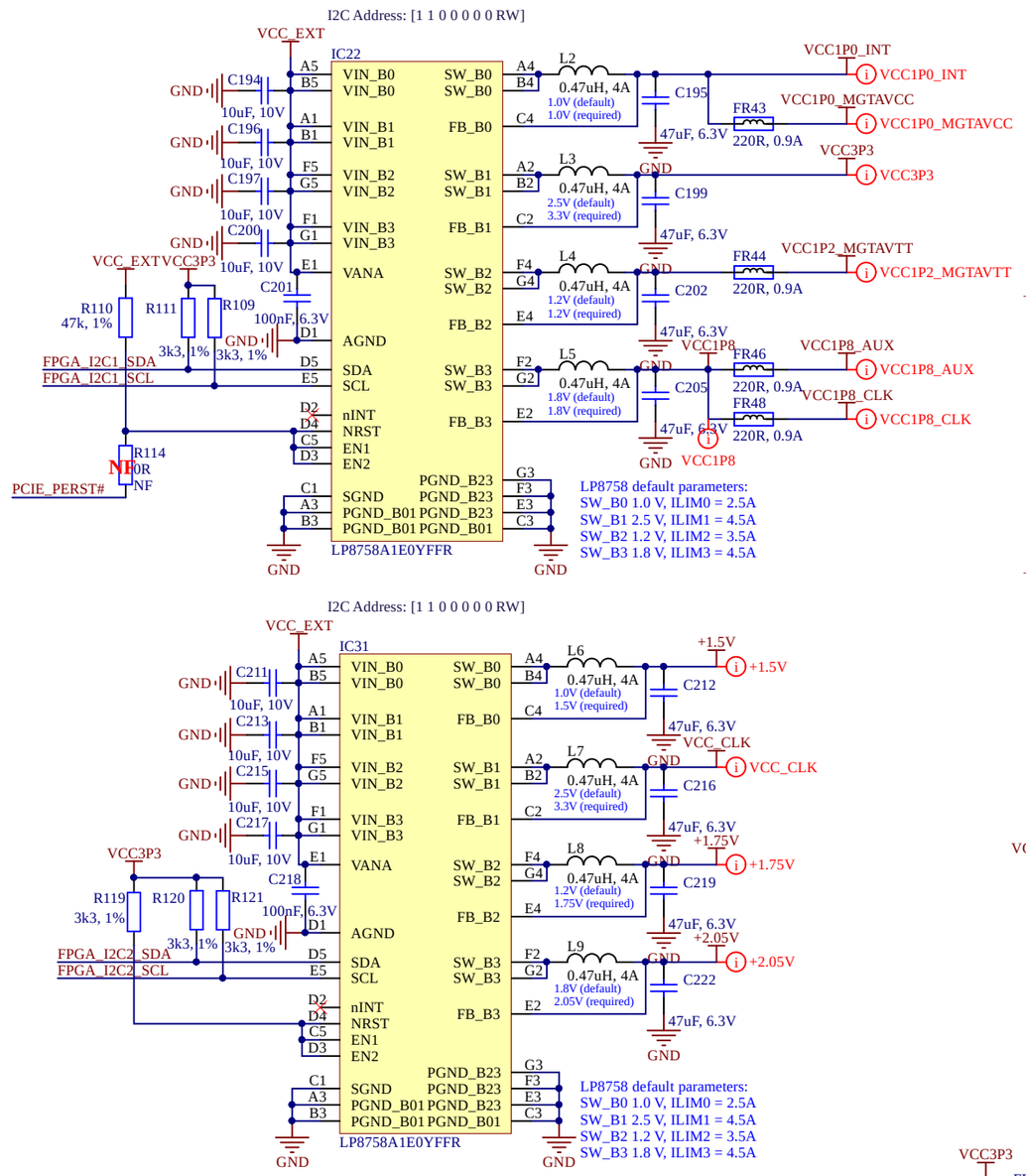

Linear regulators

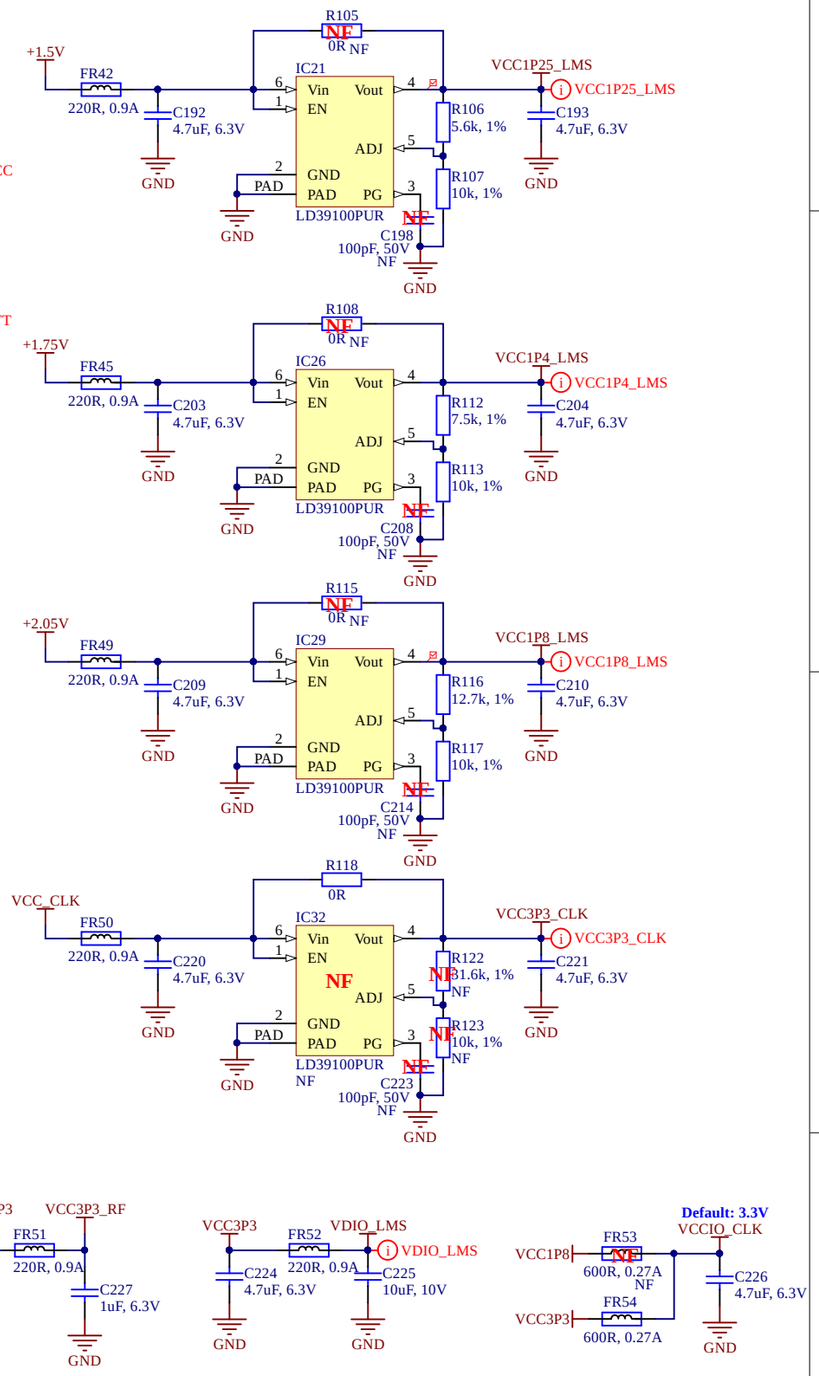

Voltage reference

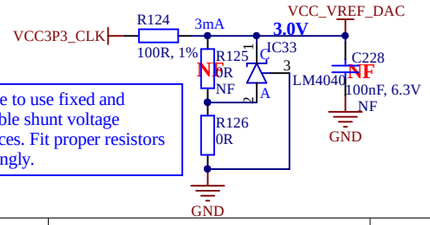

Possible to use fixed and adjustable shunt voltage references. Fit proper resistors accordingly.

Project name: *LimeSDR-XTRX_1v2.PrjPcb*			
Title: *Power*		*Lime Microsystems* *Surrey Tech Centre* *Guildford GU2 7YG* *Surrey* *United Kingdom*	Lime microsystems
Size: A3	Revision: v1.2		
Date: 2023-11-17	Time: 17:06:51	Sheet 10 of 10	
File: 10_Power.SchDoc			