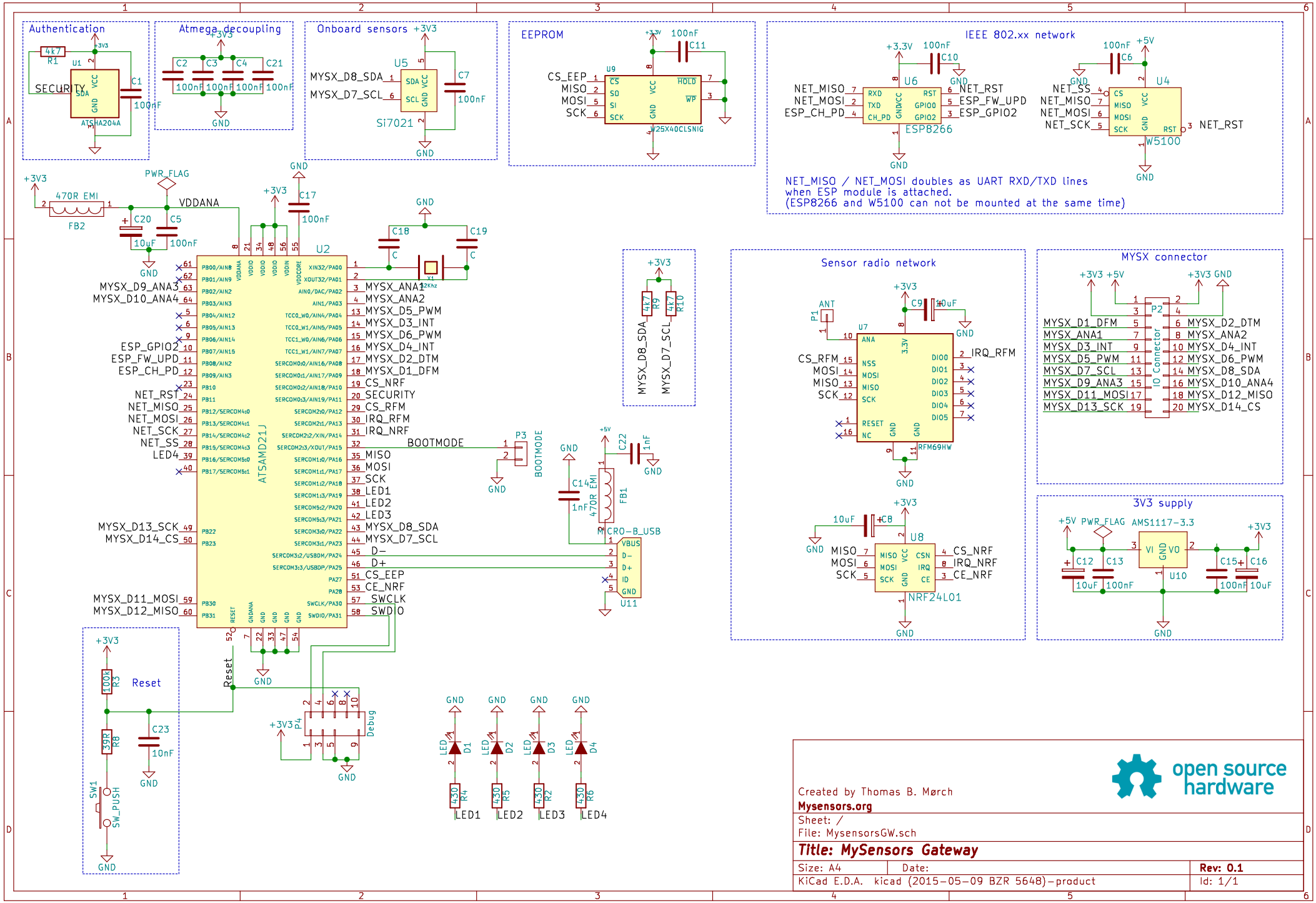
Authentication
Atmega decoupling
Onboard sensors
EEPROM
IEEE 802.xx network
NET_MISO / NET_MOSI doubles as UART RXD/TXD lines
when ESP module is attached.
(ESP8266 and W5100 can not be mounted at the same time)
Sensor radio network
MYSX connector
3V3 supply
ATSAMD21J
Reset
Debug
BOOTMODE
open source hardware
Created by Thomas B. Mørch
Mysensors.org
Sheet: /
File: MysensorsGW.sch
Title: MySensors Gateway
Size: A4
Date:
Rev: 0.1
KiCad E.D.A. kicad (2015-05-09 BZR 5648)-product
Id: 1/1