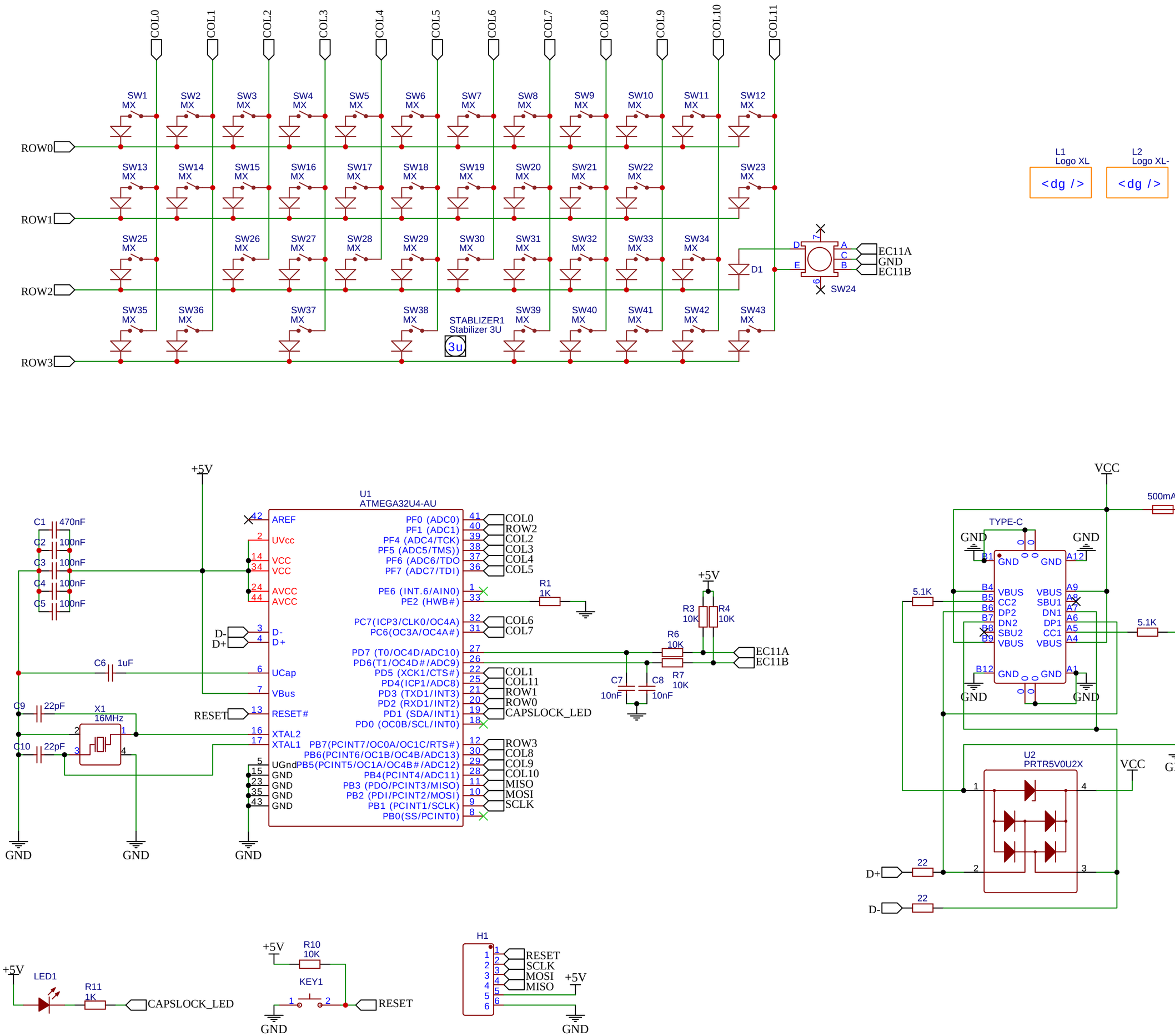

TITLE: xtrm	REV: 1.0
Company: 4fun	Sheet: 1/1
Date: 2020-07-19 Drawn By: myst729	