A DIGITAL MODEL OF THE ECHOPLEX TAPE DELAY

- Steinunn Arnardottir
- Jonathan S. Abel
- Julius O. Smith

Audio Engineering Society
Convention Paper
Presented at the 125th Convention
2008 October 2-5 San Francisco, CA, USA

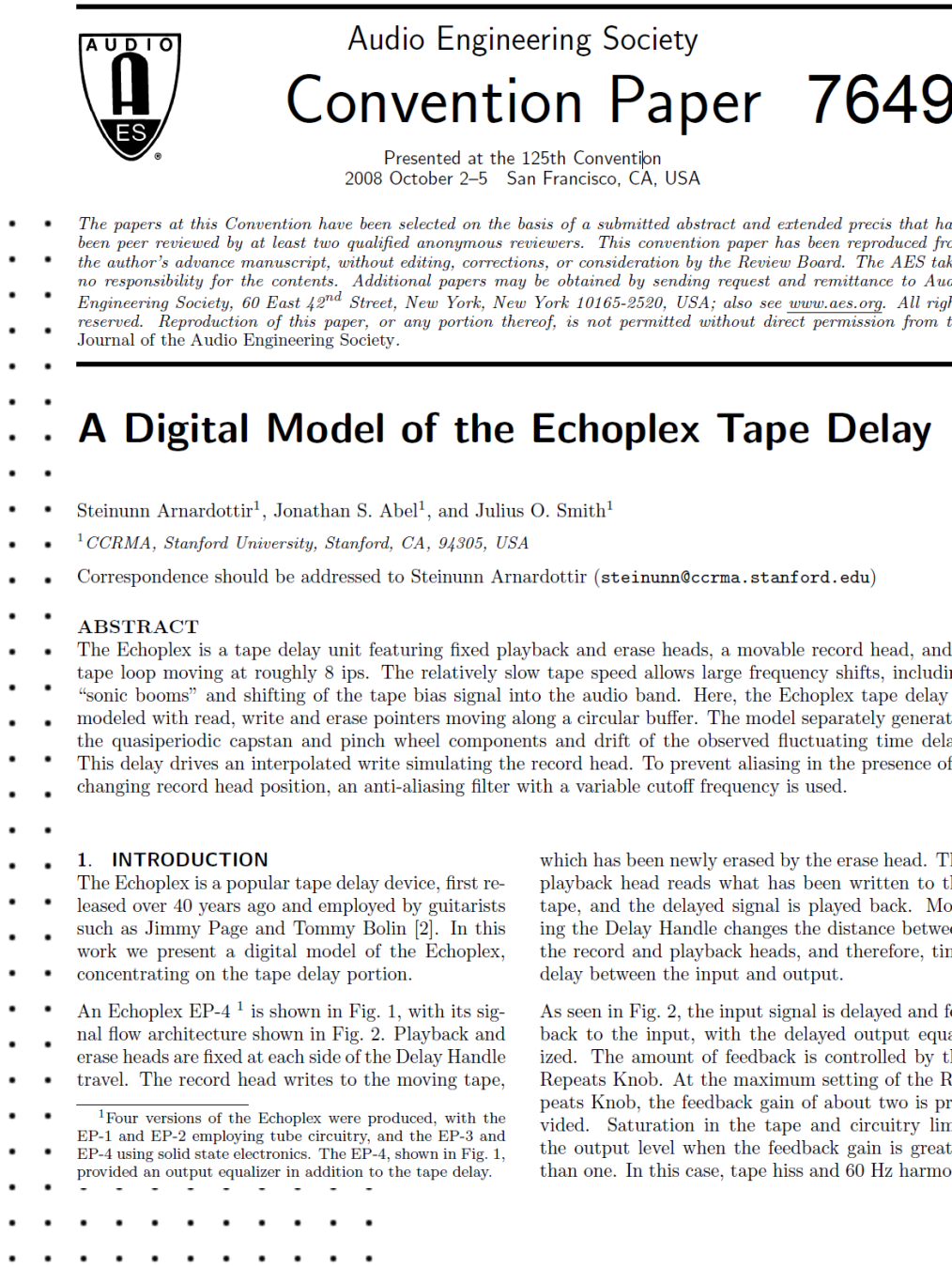

Audio Engineering Society

Convention Paper 7649

Presented at the 125th Convention
2008 October 2–5 San Francisco, CA, USA

The papers at this Convention have been selected on the basis of a submitted abstract and extended precis that ha been peer reviewed by at least two qualified anonymous reviewers. This convention paper has been reproduced fro the author's advance manuscript, without editing, corrections, or consideration by the Review Board. The AES tak no responsibility for the contents. Additional papers may be obtained by sending request and remittance to Aud Engineering Society, 60 East 42nd Street, New York, New York 10165-2520, USA; also see www.aes.org. All righ reserved. Reproduction of this paper, or any portion thereof, is not permitted without direct permission from t Journal of the Audio Engineering Society.

A Digital Model of the Echoplex Tape Delay

Steinunn Arnardottir[1], Jonathan S. Abel[1], and Julius O. Smith[1]

[1] *CCRMA, Stanford University, Stanford, CA, 94305, USA*

Correspondence should be addressed to Steinunn Arnardottir (steinunn@ccrma.stanford.edu)

ABSTRACT

The Echoplex is a tape delay unit featuring fixed playback and erase heads, a movable record head, and tape loop moving at roughly 8 ips. The relatively slow tape speed allows large frequency shifts, includin "sonic booms" and shifting of the tape bias signal into the audio band. Here, the Echoplex tape delay modeled with read, write and erase pointers moving along a circular buffer. The model separately generat the quasiperiodic capstan and pinch wheel components and drift of the observed fluctuating time dela This delay drives an interpolated write simulating the record head. To prevent aliasing in the presence of changing record head position, an anti-aliasing filter with a variable cutoff frequency is used.

1. INTRODUCTION

The Echoplex is a popular tape delay device, first released over 40 years ago and employed by guitarists such as Jimmy Page and Tommy Bolin [2]. In this work we present a digital model of the Echoplex, concentrating on the tape delay portion.

An Echoplex EP-4 [1] is shown in Fig. 1, with its signal flow architecture shown in Fig. 2. Playback and erase heads are fixed at each side of the Delay Handle travel. The record head writes to the moving tape, which has been newly erased by the erase head. Th playback head reads what has been written to th tape, and the delayed signal is played back. Mo ing the Delay Handle changes the distance betwe the record and playback heads, and therefore, tim delay between the input and output.

As seen in Fig. 2, the input signal is delayed and fe back to the input, with the delayed output equa ized. The amount of feedback is controlled by th Repeats Knob. At the maximum setting of the R peats Knob, the feedback gain of about two is pr vided. Saturation in the tape and circuitry lim the output level when the feedback gain is great than one. In this case, tape hiss and 60 Hz harmo

[1] Four versions of the Echoplex were produced, with the EP-1 and EP-2 employing tube circuitry, and the EP-3 and EP-4 using solid state electronics. The EP-4, shown in Fig. 1, provided an output equalizer in addition to the tape delay.

Arnardottir, S., Abel, J. S., & Smith, J. O. (2008). A digital model of the Echoplex tape delay. *AES Convention Paper*, 125th Convention, San Francisco, CA, USA, 2008 October 2-5. Audio Engineering Society. https://www.aes.org/e-lib/browse.cfm?elib=14440

EP-4

EP-1

EP-3

ECHOPLEX TAPE DELAY

- One of the most iconic tape delays in history
- Introduced in 1961
- Designed by Mike Battle & Don Dixon
- Distinguished itself by offering more control and better accuracy in adjusting delay times compared to earlier models, making it highly sought after by musicians and producers.
- EP-1 & EP-2 (1960s): These early models utilized **vacuum tubes**, which contributed to their warm, organic sound.
- EP-3 (1970s): This version shifted to **solid-state technology**, improving reliability and making it more affordable. The **EP-3** is especially famous for its built-in **preamp**, which added richness and "boost" to the signal, often used without the echo effect. This model is favored by legends like **Jimmy Page** and **Eddie Van Halen**.
- EP-4: A continuation of the EP-3 design, but with lower build quality and some design flaws. It introduced features like LED input meters and additional tone controls but didn't gain as much traction.

SOUND CHARACTERISTICS

1. Analog Warmth and Grit: The Echoplex produces delays that are distinctively warm and natural compared to modern digital delays. This analog warmth comes from the use of tape loops, which slightly degrade over time, resulting in delays that sound more organic and less sterile. Each repeat becomes softer and more textured, which contrasts with the clean and precise echoes produced by digital devices.
2. Subtle Saturation and Compression: In models like the EP-1 and EP-2, the use of vacuum tubes adds a layer of saturation that contributes to the Echoplex's characteristic sound. As the delay signal repeats, it becomes slightly compressed, adding a pleasant distortion to the tail of each echo. This saturation can also lead to a gritty, lo-fi sound that many guitarists like Neil Young and Brian May have utilized to enhance their live performances.
3. Preamp Magic: One of the standout features of the EP-3 is its FET preamp, which is often used without engaging the delay. This preamp adds a subtle boost and tonal coloration to the input signal, making the guitar sound fuller and more dynamic. Guitarists such as Tom Verlaine of Television used this preamp to add clarity and richness to their tone, even when the echo effect was bypassed
4. Self-Oscillation and Feedback: When the Repeats Knob is cranked up, the Echoplex can enter self-oscillation, where the delays feed back into each other, creating swirling, ambient soundscapes. This behavior is particularly useful for experimental music, as the feedback creates evolving sound textures that can be manipulated in real-time by adjusting the Delay Handle.
5. Doppler Effects and Sonic Booms: An interesting feature of the Echoplex is the ability to manipulate the Delay Handle, changing the distance between the playback and record heads to create Doppler-like pitch shifts. Quick adjustments can result in dramatic changes in delay time, causing the signal to drop in pitch or create "sonic booms", a sound akin to a sudden burst of noise or a radical shift in tone
6. Hiss and Mechanical Imperfections: Due to the analog tape system, the Echoplex is known to produce a certain amount of tape hiss and mechanical noise, particularly in older units like the EP-1 and EP-2.

R
Reverb

ABSTRACT: REPLICATING THE ANALOG ECHOPLEX

The authors aim to digitally replicate the **Echoplex tape delay**, a device known for its **sonic irregularities** and **frequency shifts** due to mechanical components. The key features they intend to model are:

1. **Quasiperiodic fluctuations** in delay caused by the capstan and pinch wheel.
2. **Self-oscillating behavior** resulting from high feedback gain.
3. **Frequency shifts**, including Doppler effects and "sonic booms," that occur when adjusting the delay speed.

The digital model simulates these behaviors using **interpolated writes**, a **circular buffer**, and **anti-aliasing filters**, ensuring that it captures both the nuances and the imperfections of the original analog system.

INTRODUCTION

1. **Fixed playback and erase heads** with a **movable record head**, which allows the delay time to vary based on the distance between these heads.
2. A **tape loop** moving at approximately **8 inches per second (ips)**, resulting in noticeable **frequency shifts**, including **Doppler effects** and **sonic booms**, especially when the delay is adjusted rapidly.
3. The unit's relatively slow tape speed allows **large shifts in frequency**, sometimes even shifting the **tape bias signal** into the audible frequency range.
4. The Echoplex is well-known for producing **natural echo** with the capability to **self-oscillate** when feedback levels are high. When the **Repeats Knob** is set to maximum, the feedback gain exceeds 1, allowing the unit to create **Doppler-shifted sounds** during self-oscillation.
5. The **analog saturation** caused by the tape and circuitry adds a distinctive character, with tape hiss and 60 Hz harmonics contributing to its vintage sound

FIG. 1: ECHOPLEX EP-4 TAPE DELAY UNIT

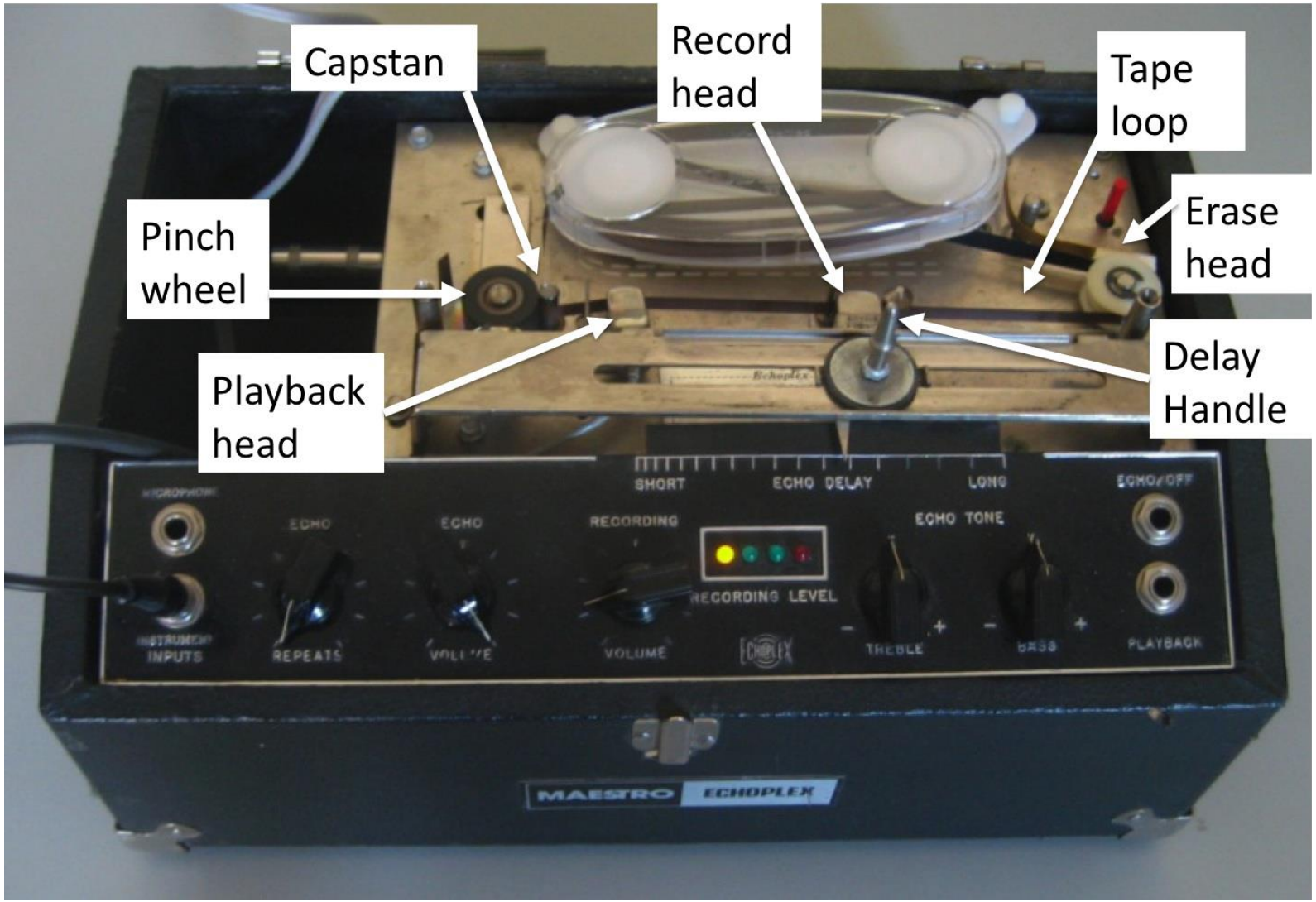

Figure 1: Echoplex-4 tape delay unit.

FIG. 2: ECHOPLEX EP-4 SIGNAL FLOW ARCHITECTURE

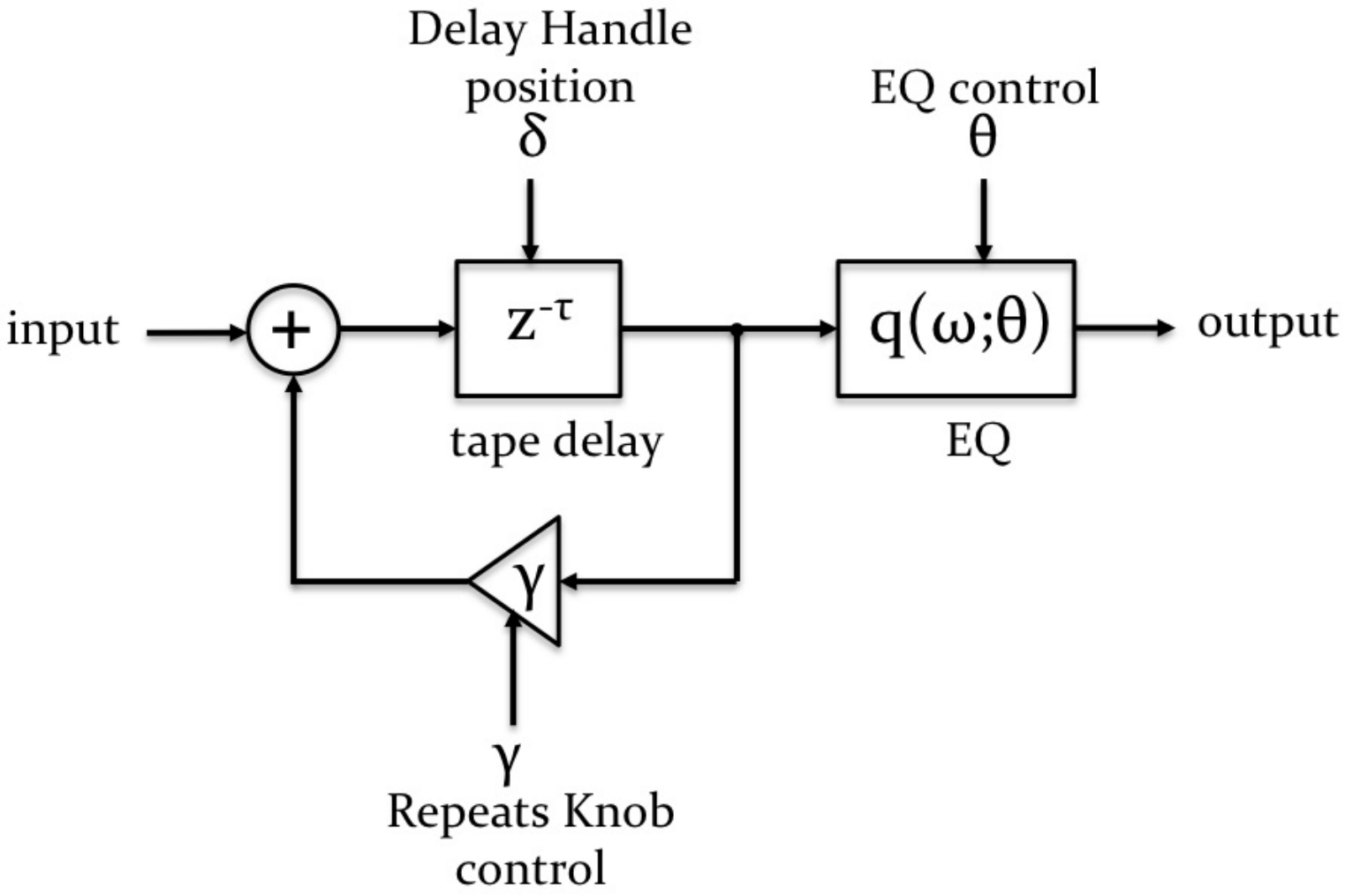

Figure 2: Echoplex EP-4 signal flow architecture

TAPE DELAY ANALYSIS/MEASUREMENTS

Pulse Train Measurement:

- Measured delay response by feeding **pulse trains** into the system every 10 ms.
- Observed **time evolution** of the delay through output pulse response.

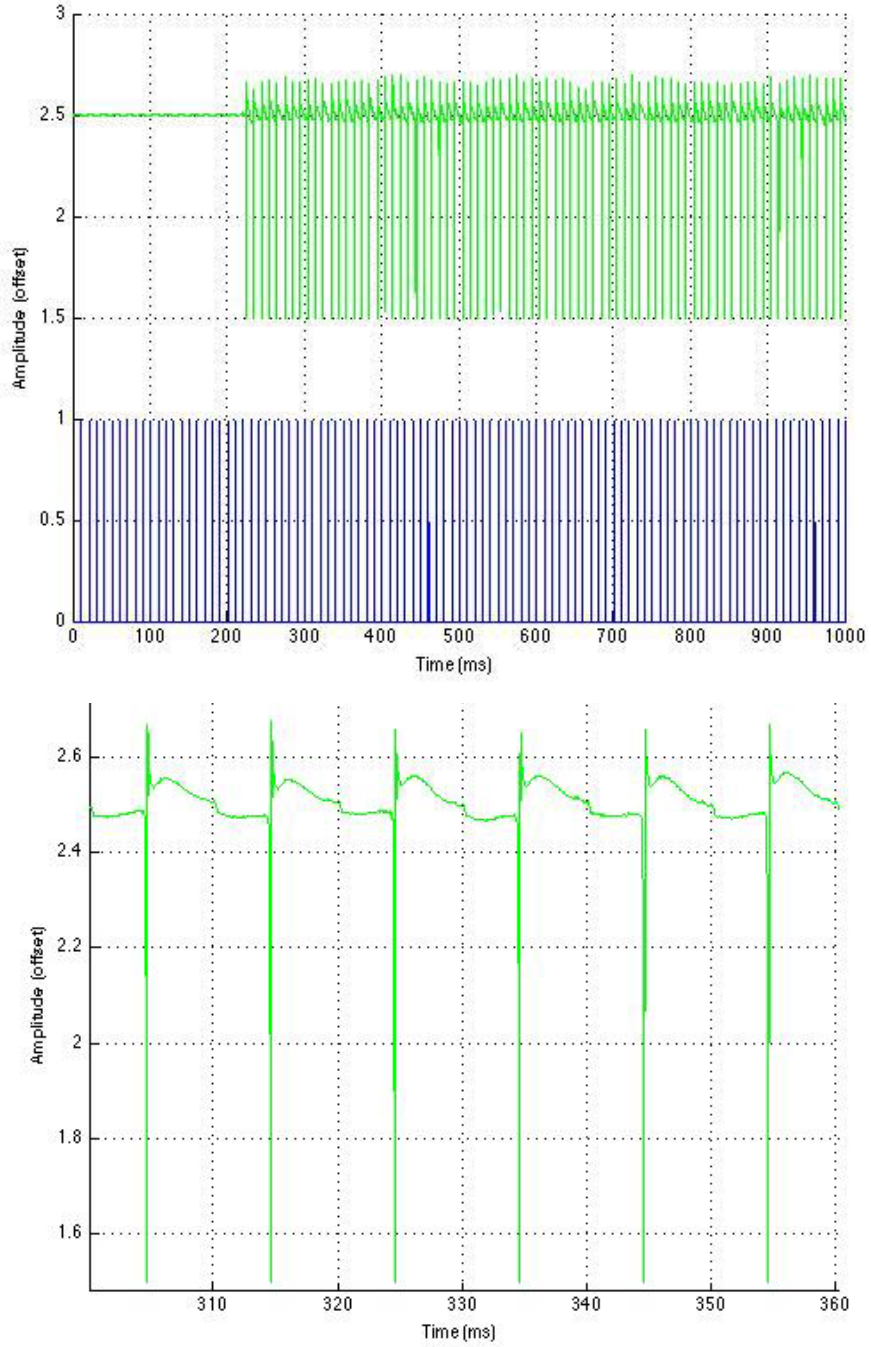

Fig. 3: (a) (top) Input pulse train and delayed pulse train, offset, (b) (bottom) Delayed pulse train, zoomed in.

DELAY HANDLE & FLUCTUATIONS

Delay handle Position

- Delay time increases **linearly** with the distance between record and playback heads.
- Tape speed measured at **8 inches per second (ips)**.

Fluctuating Time Delay:

- Caused by **capstan and pinch wheel irregularities**.
- Introduced **quasi-periodic fluctuations** and a **low-frequency drift** in the delay.

- Fig. 6: Measured mean time delay as a function of distance between record and playback heads, “o” least squares fit “-”
- Fig. 7: Time delays as a function of time for five different positions of the Delay Handle, measured every 2.5 cm-mean removed and offset by 1 ms.

Figure 6

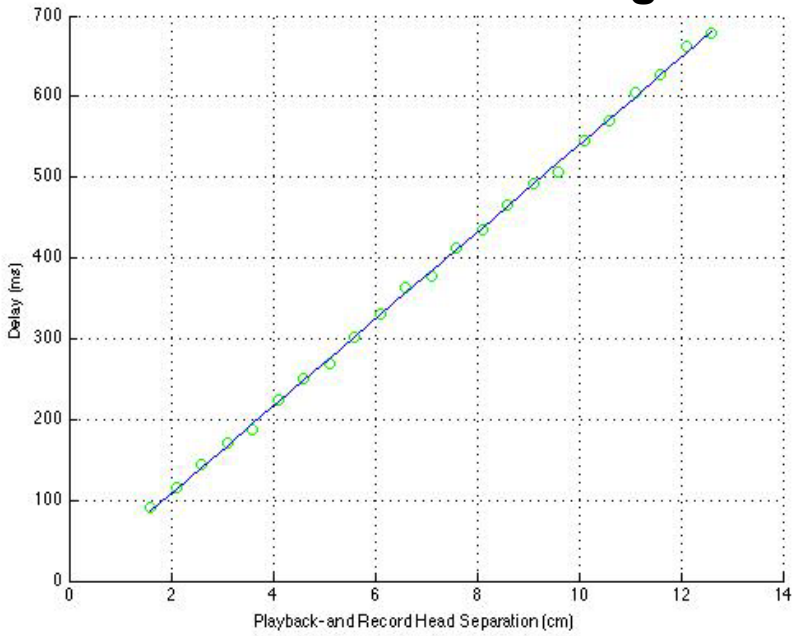

Figure 7

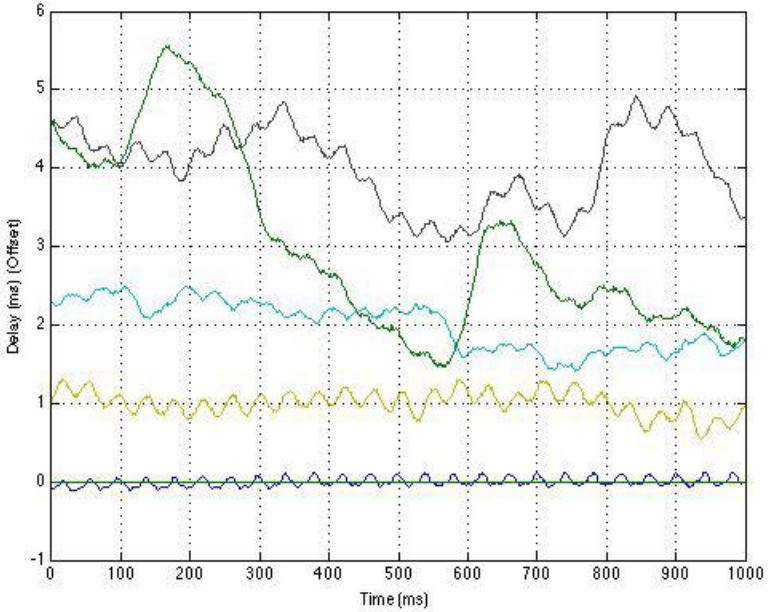

MECHANICAL DISTURBANCES

Figure 8

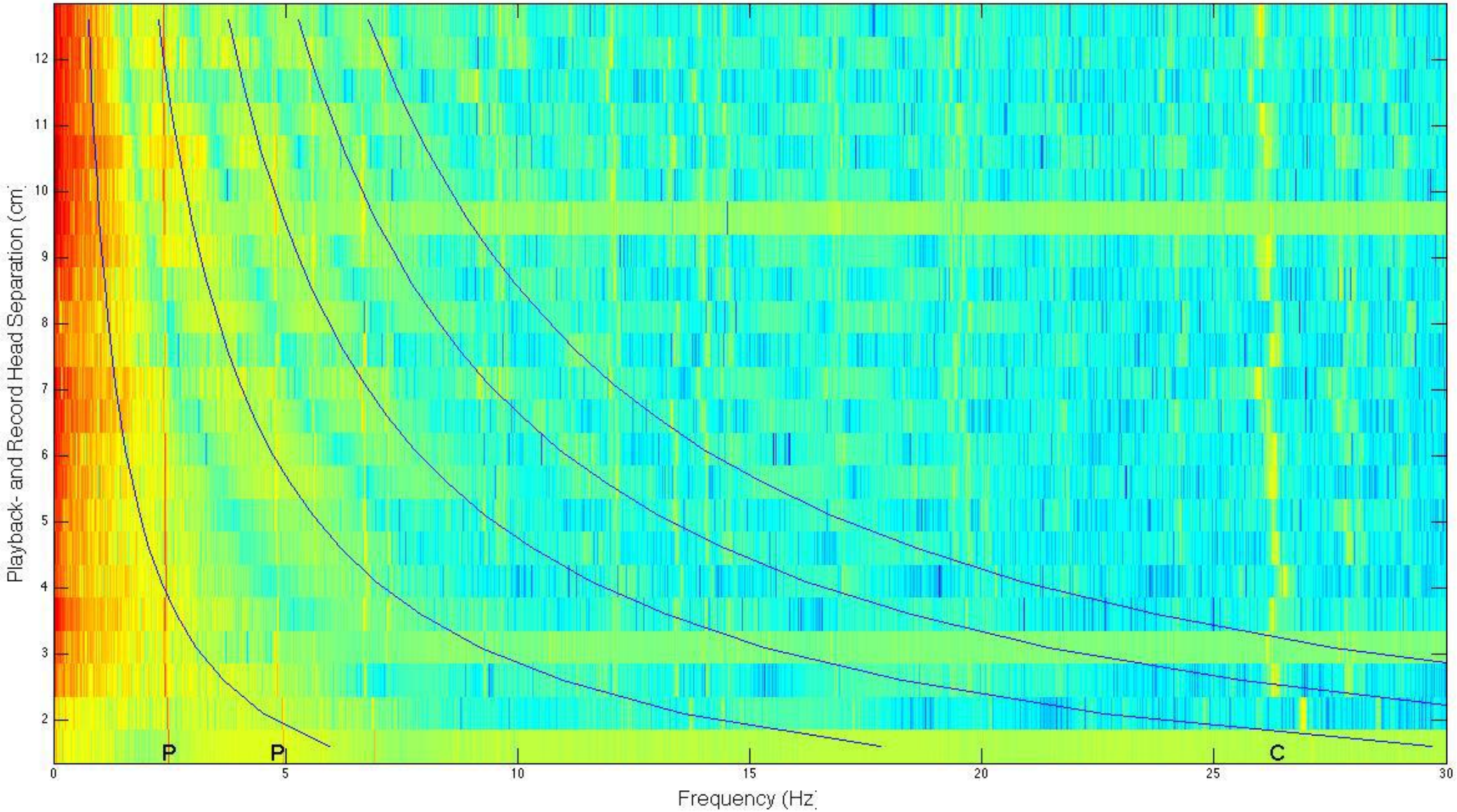

- **2.5 Hz and 5 Hz**: These are associated with disturbances caused by the **pinch wheel**.
- **26 Hz**: This frequency peak corresponds to the rotation rate of the **capstan** (rotation rate)

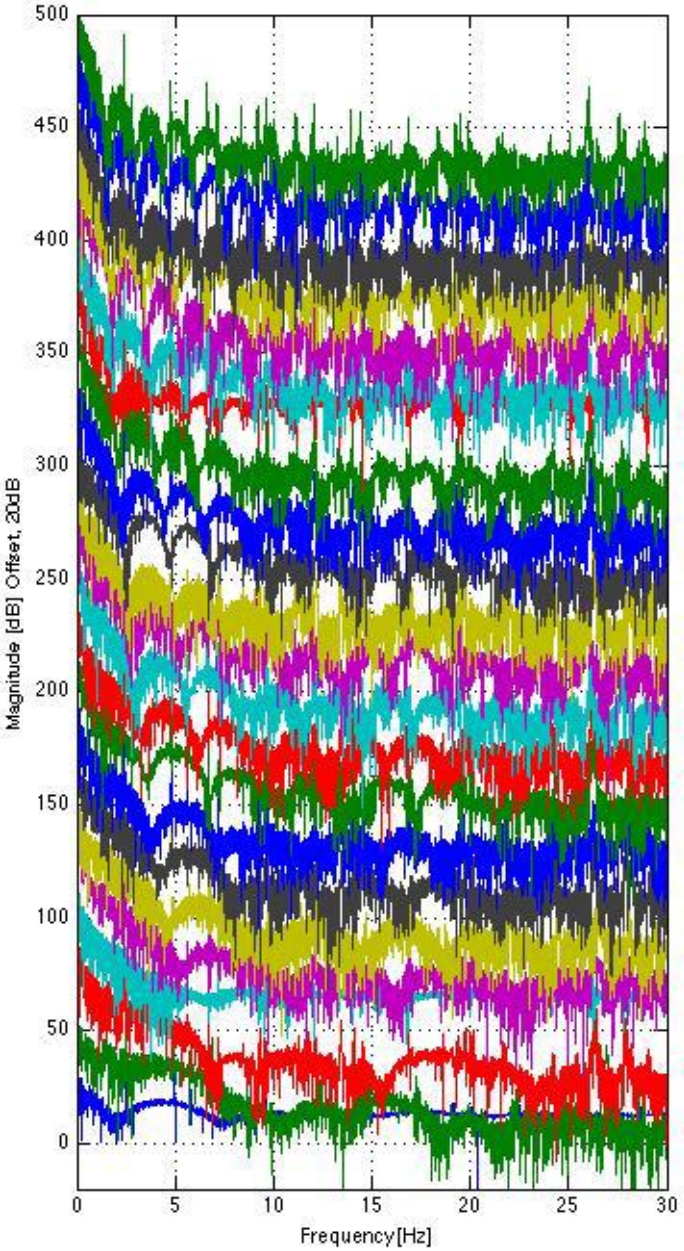

Fig. 9: Delay spectra

SCALLOPS

- Demonstrates that the delay's frequency response is influenced by both periodic disturbances and mechanical noise, which cause these spectral nulls.
- The nulls are mechanical disturbances propagating along the tape.
- The nulls occur at odd multiples of the inverse distance between the record and playback heads, which creates a comb-like pattern in the frequency response (i.e., resembling a comb filter).
- There is a low-frequency drift visible in the spectra, which represents the slow variations in tape speed over time.

ECHOPLEX MODEL

3 main components:

- **Delay Generation**: A fluctuating time delay that simulates the analog behavior of the tape delay.
- **Nonlinear Saturation**: A saturation stage that mimics the **nonlinear distortion** caused by the original tape's feedback and electronic circuitry.
- **Feedback Loop**: Feedback control, determined by the **Repeats Knob**, which controls the amount of delayed signal fed back into the system to produce multiple repeats.

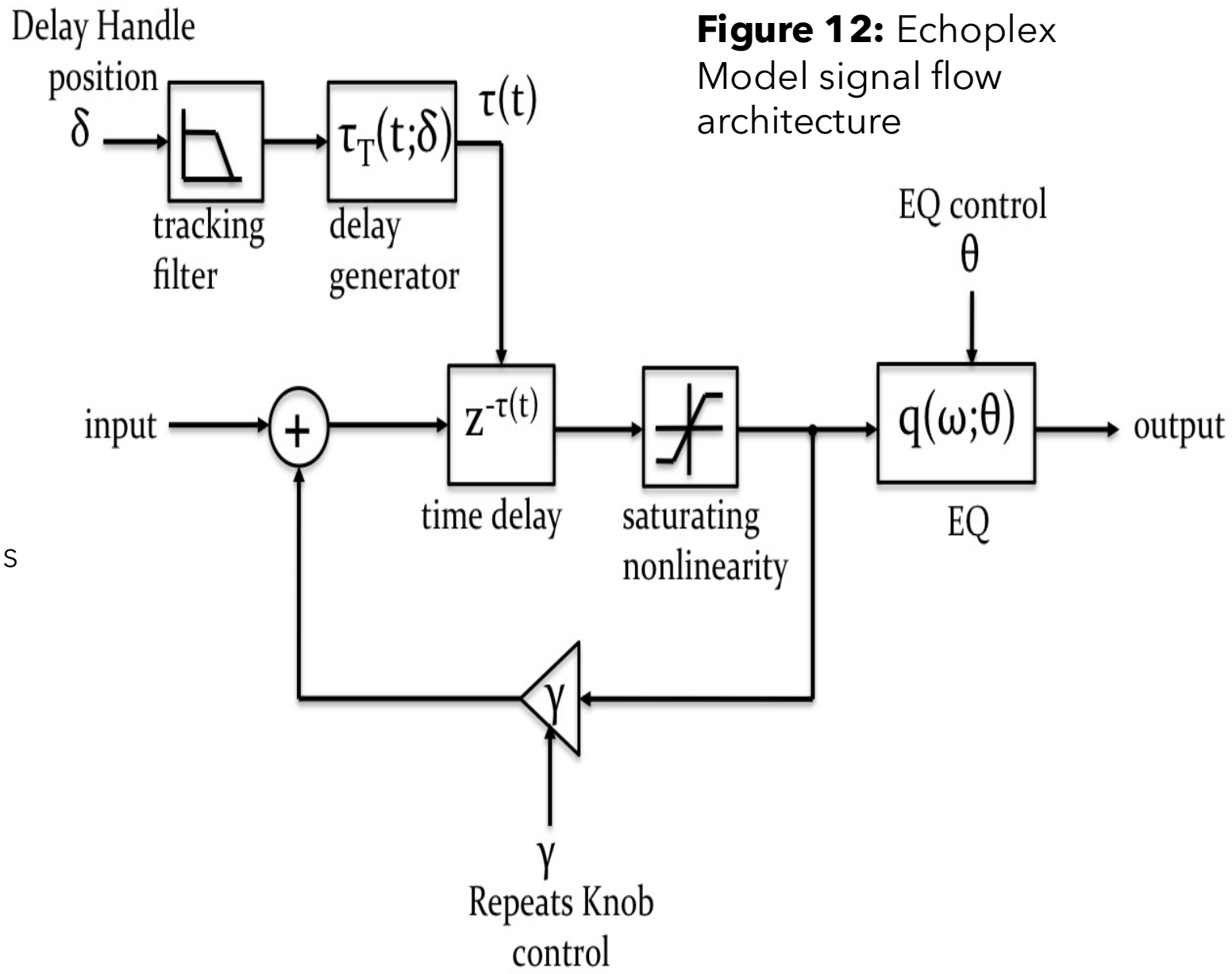

Figure 12: Echoplex Model signal flow architecture

1. CIRCULAR BUFFER

- The **time-varying delay** is implemented using a **circular buffer** (same length as the modeled tape loop, not specified).
- Read pointer moves one sample per sampling period.
- The **delay time (τ)** is dynamically controlled by the **Delay Handle position (δ)**, which changes the **distance between the write and read pointers** in the circular buffer.
  - **Key Algorithmic Detail**: The write pointer advances at the system's sample rate, and the **read pointer** position is calculated based on the desired delay time, which varies according to the delay fluctuations.
  - When the write pointer is moving forward, the interpolated signal is added into the buffer.
  - When the write runs backwards, the signal written replaces whats in the delay line (sonic boom).
- **Mathematical Model:**
- The position of the **read pointer** (which emulates the playback head) is:

$$\text{Read Pointer} = \text{Write Pointer} - \tau$$

where **τ** is the time delay, which changes according to the Delay Handle and is affected by **periodic and stochastic components** derived from the capstan and pinch wheel.

DELAY GENERATION

- Adding the mean delay by Delay Handle position and stochastic processes (capstan, pinch wheel, and low-frequency drift).
- Scallop shape = (feed-forward) Comb filter (also controlled by the Delay Handle position).
- Pinch Wheel + Capstan = sum of sinusoids of equal amplitude, incremented phases and a small additive low-pass, zero-mean noise process to introduce fluctuations.
- Low-frequency drift = filtered white Gaussian noise, variance proportional to the record head-playback head distance.

Figure 11: Delay generation signal flow

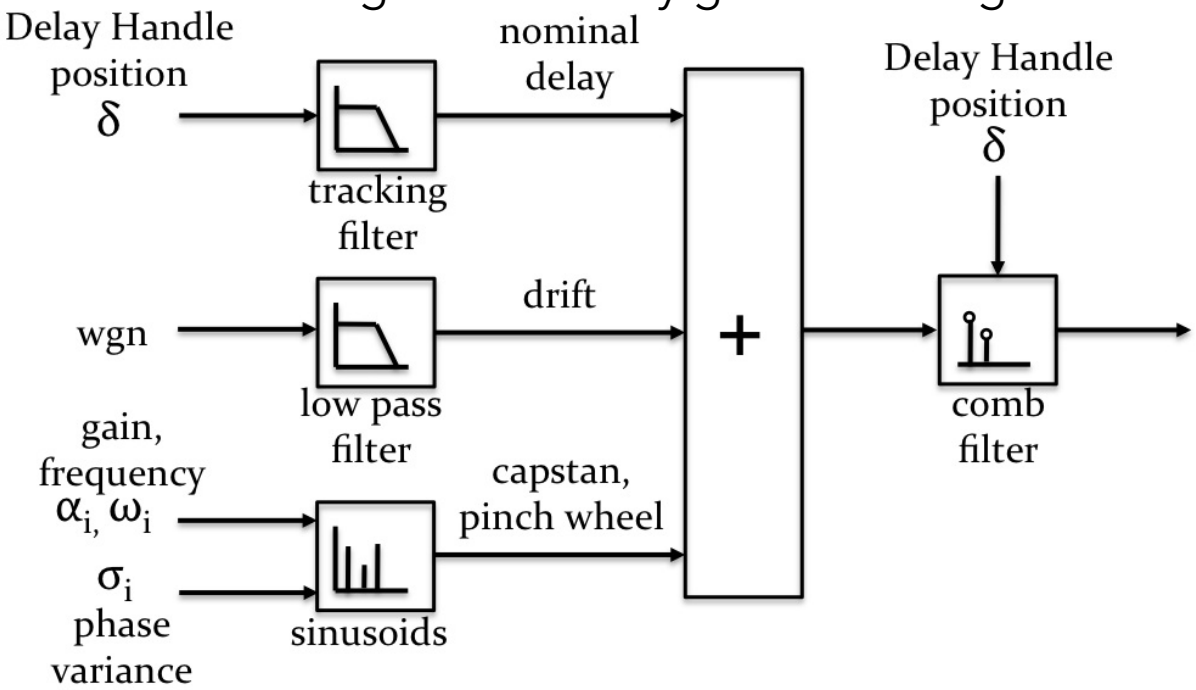

Figure 10: Simulated v. original time delay

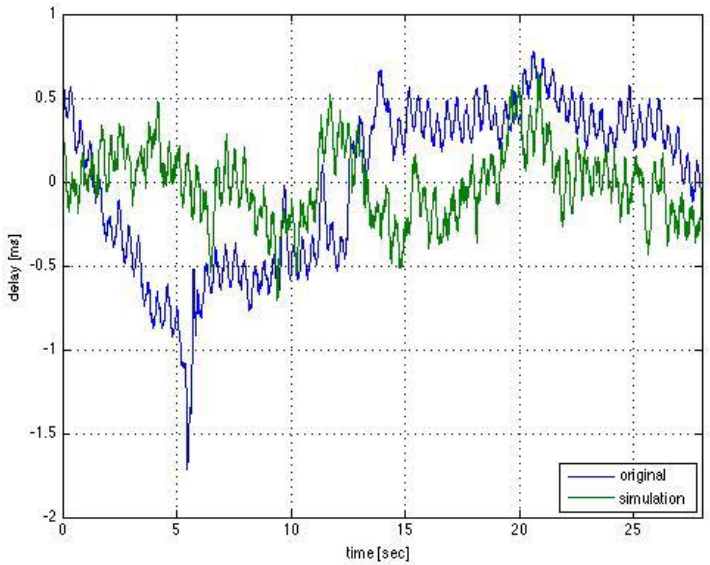

PERIODIC & STOCHASTIC COMPONENTS

- Capstan and Pinch Wheel Fluctuations: The authors model the periodic variations in the delay caused by mechanical imperfections in the capstan and pinch wheel using sinusoidal oscillators.
- The periodic components are modeled as:

$$\text{Fluctuation}=A_1\sin(2\pi f_1 t)+A_2\sin(2\pi f_2 t)$$

where f_1 and f_2 are the frequencies corresponding to the capstan and pinch wheel (e.g., 26 Hz for the capstan), and A_1 and A_2 are the amplitudes of the fluctuations.

- **Low-Frequency Drift**: In addition to these periodic fluctuations, a low-frequency drift is modeled by passing white noise through a low-pass filter to simulate gradual variations in tape speed:

$$\text{Drift}=\text{LPF}(\text{White Noise})$$

This drift adds an additional random component to the delay time, simulating the imperfections and instabilities inherent in analog systems.

2. INTERPOLATED WRITE

- The **interpolated write** is necessary to handle changes in the delay time when the **Delay Handle** is moved. Since the **delay time** can vary continuously, the write pointer must handle non-integer positions in the circular buffer.
  - **Algorithm**: Linear interpolation is used to smoothly add the input signal to the circular buffer at fractional indices. This prevents artifacts that would occur if only whole-number indices were allowed (which could lead to clicks or noise in the output).
  - Figure 13 shows how the filter ensures that no high-frequency noise (aliasing) is introduced when the delay time changes rapidly (i.e., when the **Delay Handle** is moved quickly). This is a critical part of ensuring that the digital model produces clean, accurate delays even during dynamic adjustments.

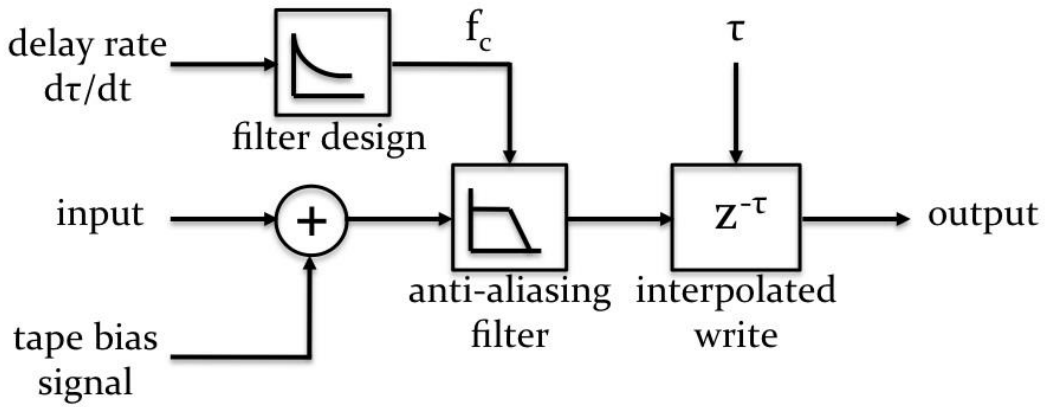

Figure 13: Time delay implementation

3. ANTI-ALIASING FILTER

- A **critical algorithm** in the digital model is the use of an **anti-aliasing filter** to avoid aliasing when the **delay time** changes rapidly (e.g., when the record head moves faster than the playback head).
  - **Variable Cutoff Frequency**: The **cutoff frequency** of the anti-aliasing filter adjusts **dynamically** depending on the **speed difference** between the write and read pointers. This filter ensures that the delay line remains smooth and free of high-frequency noise or digital artifacts during rapid delay changes.
- **FIR filters (Finite Impulse Response)** are used in this scenario, with their **cutoff frequency** scaled based on the instantaneous tape speed. The index into a **tabulated sinc function** is scaled to control the cutoff frequency dynamically. This approach allows for precise control over the bandwidth of the interpolated write, ensuring no aliasing when the delay time changes faster than the tape speed.

3. ANTI-ALIASING FILTER

- The **delay trajectory** of the Echoplex, which describes how the delay time fluctuates over time, is generated using a **low sampling rate** of approximately **200 Hz**.
- The reason for using a lower sampling rate is because the **delay time fluctuations** caused by the **capstan** and **pinch wheel** are **low-frequency processes**, and do not require a high sampling rate to be accurately captured
- Less computational complexity with same accuracy in delay (fluctuation) behavior.

LEAKY INTEGRATOR

- Formula for Time Delay Update
- To generate the delay trajectory at a lower sampling rate, the authors propose using a **leaky integrator** to interpolate between the target delay times. The **time delay τ** at each sample is calculated using the formula:

$$\tau(t+1) = (1-\lambda)\tau_T + \lambda\tau(t)$$

Where:

τ is the **current delay time**,

τT is the **target delay** based on the **Delay Handle** position,

λ is the **leakage factor**, which governs the **rate of change** toward the target delay (ensuring **smooth transition** between delay times)

Explanation:

- The formula is designed to **smooth out** changes in the delay, ensuring that the delay time **relaxes** toward the target τT over time. This prevents sudden jumps in the delay, which could otherwise introduce artifacts.
- By using a **leaky integrator**, the delay trajectory is updated **gradually** based on the target delay set by the **Delay Handle**, while incorporating the **periodic and stochastic fluctuations** modeled from the capstan and pinch wheel mechanics.

5. NONLINEAR SATURATION

- **Nonlinear behavior** is a key aspect of the Echoplex's analog sound, especially at high feedback levels. The digital model implements this by applying a **nonlinear saturation function** after the delay:
- **Saturation Algorithm**: The delayed signal is processed by a **nonlinear function** that limits the amplitude when the feedback gain is high, mimicking the **tape saturation** and **distortion** caused by the analog circuitry.
- The function used is likely a form of **soft clipping**, which smoothly compresses the signal beyond a certain threshold, ensuring that it doesn't clip harshly but instead mimics the **smooth saturation** of the original analog unit.

6. FEEDBACK AND REPEATS KNOB CONTROL

- The **feedback loop** is controlled by the **Repeats Knob** (γ), which determines the amount of the delayed signal that is fed back into the input.
- **Feedback Gain Algorithm**: The feedback gain is applied by scaling the delayed signal before it is added back to the input. High feedback levels lead to **self-oscillation**, where the repeated delays create sustained echoes.
- The feedback loop is essential for producing **multiple repeats**, and the authors ensure that the feedback gain is carefully controlled to match the behavior of the original Echoplex.

CONCLUDING REMARKS

Strengths

The digital model faithfully captures the core behaviors of the analog Echoplex, including the complex delay fluctuations caused by mechanical components like the capstan and pinch wheel. The use of sinusoids for periodic fluctuations and stochastic processes for drift successfully mimics the organic, evolving delays of the original device

- Innovative Anti-Aliasing Approach: The implementation of an anti-aliasing filter with a variable cutoff frequency is a notable innovation. It allows the model to handle rapid delay changes without introducing unwanted digital artifacts, maintaining a smooth and clean delay signal during dynamic adjustments.
- Computational Efficiency: By generating the delay trajectories at a relatively low sampling rate (e.g., 200 Hz), the authors managed to create a model that is computationally efficient while still being accurate. This is an essential feature for real-time audio applications.

Limitations

- Scope of the Model: While the paper provides a strong model of the delay mechanism, it does not focus on other aspects of the Echoplex, such as its preamp circuit, which many guitarists use for tone shaping even without the delay.
- Additionally, the model doesn't delve deeply into the self-oscillation behavior at extreme feedback levels, which is a key part of the Echoplex's performance in certain musical contexts.

SOURCES

- Arnardottir, S., Abel, J. S., & Smith, J. O. (2008). A digital model of the Echoplex tape delay. AES Convention Paper, 125th Convention, San Francisco, CA, USA, 2008 October 2-5. Audio Engineering Society. https://www.aes.org/e-lib/browse.cfm?elib=14440
- Echoplex. (n.d.). Wikipedia. Retrieved December 9, 2023, from https://en.wikipedia.org/wiki/Echoplex
- Reel Deal: The Echoplex Tape Delay Now and Then. (2017, October 24). Reverb News. Retrieved December 9, 2023, from https://reverb.com/news/reel-deal-the-echoplex-tape-delay-now-and-then
- Perfect Circuit Audio. (2017, January 20). Maestro Echoplex EP-3: What is it and how does it sound? [Video]. YouTube. https://www.youtube.com/watch?v=TKSpGmEfBj8
- Brief History of the Maestro Echoplex. (2016, November 4). ProAudioLand Musician News. Retrieved December 9, 2023, from https://proaudioland.com/news/maestro-echoplex-delay-unit/
- Maestro Echoplex EP-3 Solid State. (n.d.). Reverb. Retrieved December 9, 2023, from https://reverb.com/ca/p/maestro-echoplex-ep-3-solid-state