32-bit RISC-V Microprocessor Architecture
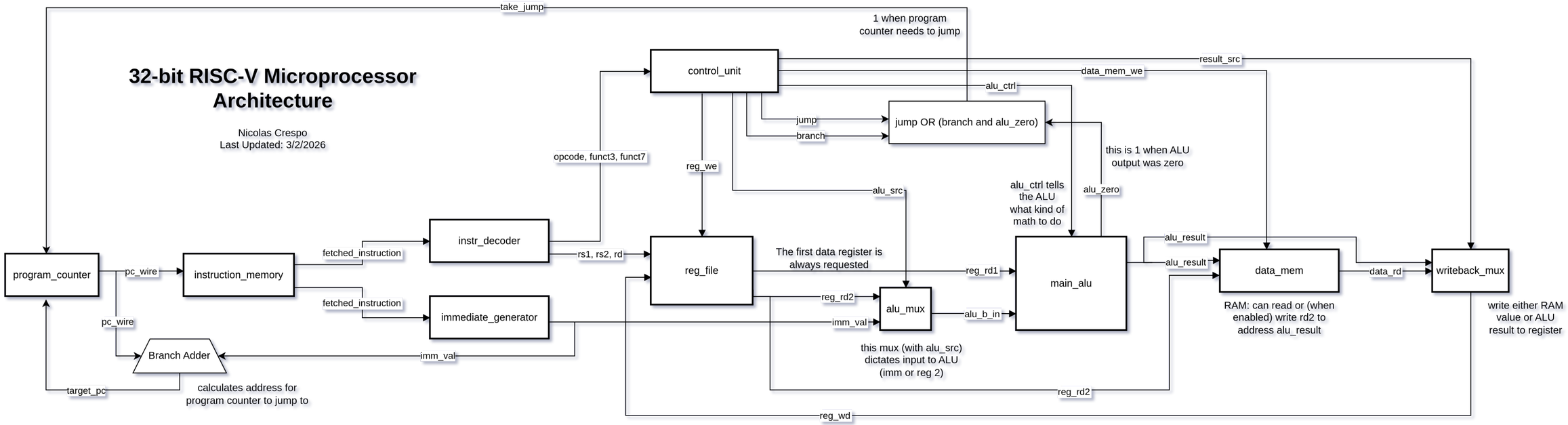
Nicolas Crespo
Last Updated: 3/2/2026