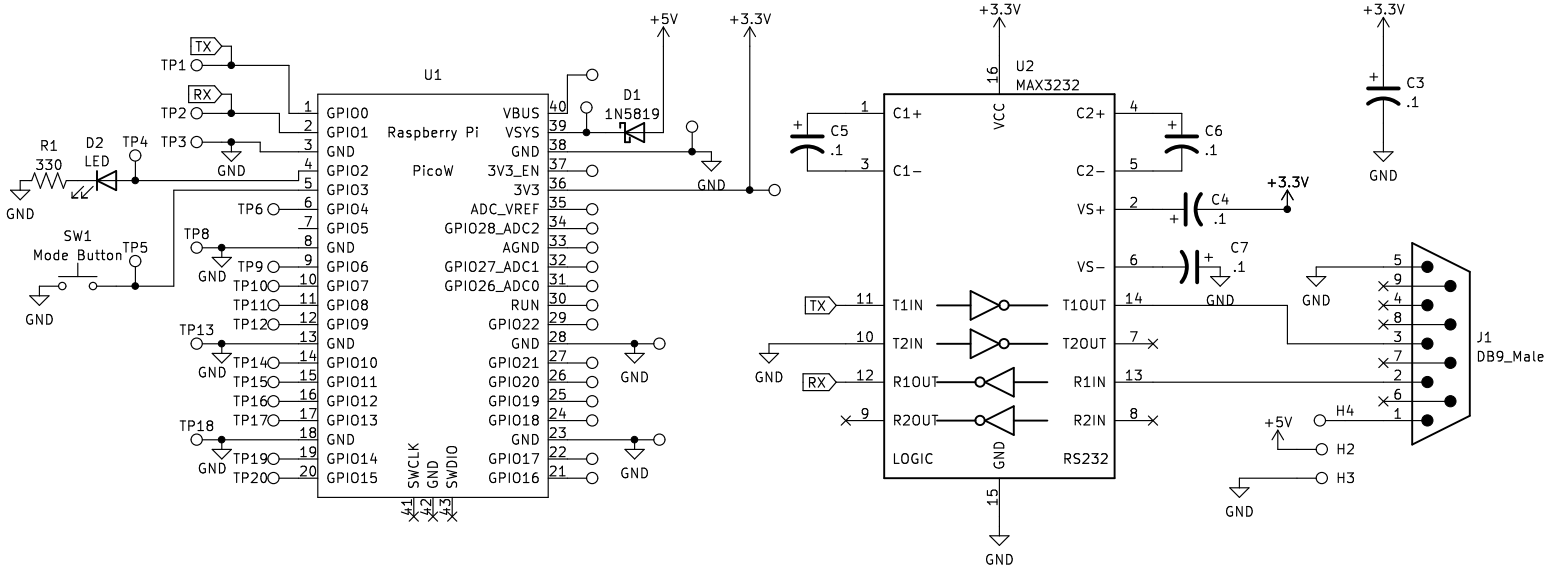

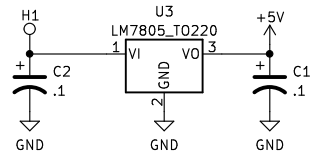

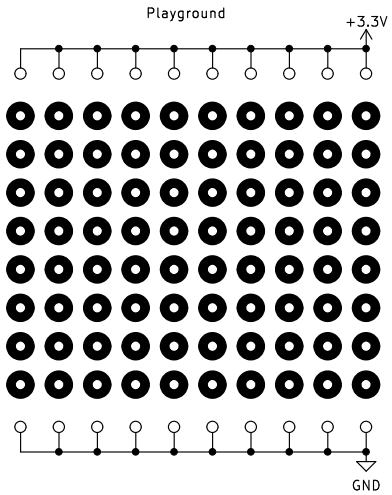

H5 MountingHole
H6 MountingHole
H7 MountingHole
H8 MountingHole

Copyright (C) 2022 J. B. Otterson N1KDO

Sheet: /
File: pico-w-rotator.kicad_sch

Title: PICO-W Wireless Rotator Controller

Size: A	Date: 2022-08-21	Rev: 0.2
KiCad E.D.A. kicad (6.0.7)		Id: 1/1