# Insights on
# APPLIED MECHANICS
## (Theories and Problems)

**Published by** : **System Inception**

**Authors** : Er. Aashish Poudel
Er. Bhisan Bhujel

© : Publisher

All rights reserved. This book is sold subject to the condition that it shall not, by way of trade or otherwise, be lent, resold, hired out, or otherwise circulated without the authors' prior written consent in any form of binding or cover other than that in which it is published and without a similar condition including this condition being imposed on the subsequent purchaser and without limiting the rights under copyright reserved above, no part of this publication may be reproduced, stored in or introduced into a retrieval system, or transmitted in any form or by any means (electronic, mechanical, photocopying, recording or otherwise), without the prior written permission of the copyright owner of the book.

**Sixth Edition:** 2022 AD

**ISBN:** 978-9937-0-8244-0

**Computer** : Creation Graphics
Bagbazar, Kathmandu

Scanned with CamScanner

# CONTENTS

**Chapter - 1**

**INTRODUCTION**

1.1 Definition and Scope of Applied Mechanics ..... 1
1.2 Concept of Rigid Body and Deformable Body ..... 1
1.3 Fundamental Concepts and Principles of Mechanics: Newtonian Mechanics ..... 2

**Chapter - 2**

**BASIC CONCEPT IN STATICS AND STATIC EQUILIBRIUM**

2.1 Concept of Particle and Free Body Diagram ..... 5
2.2 Physical Meaning of Equilibrium and its Essence in Structural Application ..... 6
2.3 Equation of Equilibrium in Two and Three Dimension ..... 7
SOLUTION TO IMPORTANT QUESTIONS ..... 8

**Chapter - 3**

**FORCES ACTING ON PARTICLE AND RIGID BODY**

3.1 Force ..... 34
3.2 Principle of Transmissibility and Equivalent Forces ..... 35
3.3 Moments and Couples ..... 36
3.4 Resolution of a Force into Force and a Couple ..... 38
3.5 Varignon's Theorem ..... 38
3.6 Lami's Theorem ..... 39
SOLUTION TO IMPORTANT QUESTIONS ..... 40

**Chapter - 4**

**CENTRE OF GRAVITY, CENTROID AND MOMENT OF INERTIA**

4.1 Centre of Gravity and Centroid ..... 86
4.2 First Moment of Area, Second Moment of Area/Moment of Inertia, and Radius of Gyration ..... 88
4.3 Perpendicular Axis Theorem ..... 89
4.4 Parallel Axis Theorem ..... 90
SOLUTION TO IMPORTANT QUESTIONS ..... 91

**Chapter - 5**

**FRICTION**

5.1 Friction ..... 145
5.1.1 Static and Dynamic Friction ..... 145
5.1.2 Laws of Solid Friction (Static or Dynamic) ..... 146
5.1.3 Advantages and Disadvantages of Friction ..... 146
5.2 Some Terminologies ..... 147
5.3 Condition of Tipping (Overturning) and Sliding ..... 149
5.4 No Friction, No Motion, Impending Motion, and Motion ..... 149

Scanned with CamScanner

5.5 High Tension Friction Grip Bolts ..... 151
SOLUTION TO IMPORTANT QUESTIONS ..... 152

Chapter - 6
ANALYSIS OF BEAMS AND FRAMES

6.1 Beams and Frames ..... 170
6.2 Different Types of Load and Support ..... 170
6.2.1 Types of Load ..... 170
6.2.2 Types of Support ..... 171
6.3 Axial Force, Shear Force, and Bending Moment ..... 173
6.4 Static Determinacy and Indeterminacy ..... 174
SOLUTION TO IMPORTANT QUESTIONS ..... 174

Chapter - 7
ANALYSIS OF PLANE TRUSSES

7.1 Introduction ..... 208
7.2 Determinacy and Stability of Truss ..... 209
SOLUTION TO IMPORTANT QUESTIONS ..... 210

Chapter - 8
KINEMATICS OF PARTICLE AND RIGID BODY

8.1 Rectilinear Kinematics ..... 244
8.2 Motion of Several Particles ..... 245
8.2.1 Relative Motion of Two Particles ..... 245
8.2.2 Dependent Motion ..... 246
8.3 Curvilinear Motion ..... 247
8.3.1 Equations for Projectile Motion ..... 247
8.3.2 Tangential and Normal Components of Acceleration ..... 249
8.3.3 Radial and Transverse Components of Acceleration ..... 251
SOLUTION TO IMPORTANT QUESTIONS ..... 253

Chapter - 9
KINETICS OF PARTICLE AND RIGID BODY

9.1 Newton's Second Law of Motion and Momentum ..... 307
9.2 Equations of Motion and Dynamic Equilibrium ..... 308
9.3 Angular Momentum and Rate of Change ..... 310
SOLUTION TO IMPORTANT QUESTIONS ..... 311

Chapter - 10
MOMENT AND ENERGY IN RIGID BODY

10.1 Kinetic Energy of a Particle: Principle of Work and Energy ..... 345
10.2 Conservation of Linear and Angular Momentum for a System of Particles ..... 346

Chapter - 11
COORDINATE SYSTEM

11.1 Scalar and Vector Quantities ..... 348
11.2 Types of Coordinate System ..... 348
*Bibliography* ..... *351*

Scanned with CamScanner

CHAPTER - 1

# INTRODUCTION

## 1.1 Definition and Scope of Applied Mechanics

**Definition:**

*Mechanics* can be defined as that science which describes and predicts the conditions of rest or motion of bodies under the action of forces. It is divided into three parts: *mechanics of rigid bodies, mechanics of deformable bodies*, and *mechanics of fluids*. The mechanics of rigid bodies is subdivided into *statics* and *dynamics*, the former dealing with bodies at rest, the latter with bodies in motion.

**Scope:**

Applied mechanics is the foundation of most engineering sciences and is prerequisite to their study. It can be used to explain and predict natural and physical phenomena and thus forms the foundation for engineering application. Knowledge of applied mechanics is must for the design and analysis of many types of structural members, mechanical components, and electrical devices encountered in engineering.

## 1.2 Concept of Rigid Body and Deformable Body

A *rigid body* is such type of body which does not deform even if very large force is applied on it. Most of the bodies considered in elementary mechanics are assumed to be rigid. Actual structures and machines, however, are never absolutely rigid and deform under the loads to which they are subjected. But these deformations are usually small and do not appreciably affect the conditions of equilibrium or motion of the structure under consideration.

For the study of statics, it is necessary to assume a body as "perfectly rigid" because if the body is not considered perfect rigid, then there will be some deformation which will lead to unstatic conditions.

*Deformable body* is such a body, which when on applying a force on it, there is appreciable change in the shape and size of it.



Scanned with CamScanner

The differences between rigid body and deformable body are tabulated below:

| Rigid body | Deformable body |
|---|---|
| i. In rigid body, particles are so interconnected that they don't change their position however large the forces applied may be. | i. In deformable body, under application of forces, particles change their position. |
| ii. A perfectly rigid body does not change its shape and size under the application of forces but only changes its position. | ii. Deformable body changes its shape and size. |
| iii. Since deformation of body is of negligible amount, condition of equilibrium is used to analyze rigid body. | iii. Condition of equilibrium can't be used as deformation is large even under small forces. |
| E.g., stone, RCC block | E.g., chalk, tennis ball |

## 1.3 Fundamental Concepts and Principles of Mechanics: Newtonian Mechanics

The study of applied mechanics is based on the following six fundamental principles:

i. **The Parallelogram Law of Forces**

It states that if two forces, acting at a point be represented in magnitude and direction by the two adjacent sides of a parallelogram, then their resultant is represented in magnitude and direction by the diagonal of the parallelogram passing though that point.

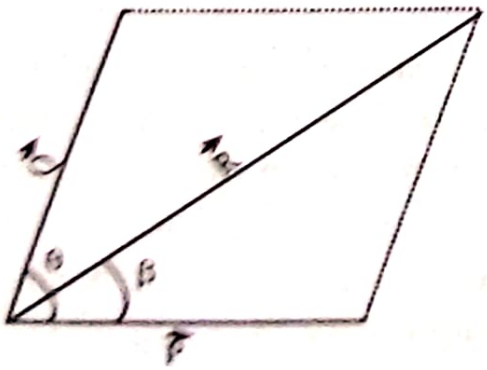




Scanned with CamScanner

Mathematically, $\vec{R} = \vec{P} + \vec{Q}$

$$|\vec{R}| = \sqrt{P^2 + Q^2 + 2PQ\cos\theta}$$

$$\beta = \tan^{-1}\left(\frac{Q\sin\theta}{P + Q\cos\theta}\right)$$

**ii. Principle of Transmissibility of Force**

It states that the condition of equilibrium or of motion of a rigid body will remain unchanged if a force $\vec{F}$ acting at a given point of the rigid body is replaced by a force $\vec{F'}$, of the same magnitude and direction but acting at different point, provided that the two forces have the same line of action.

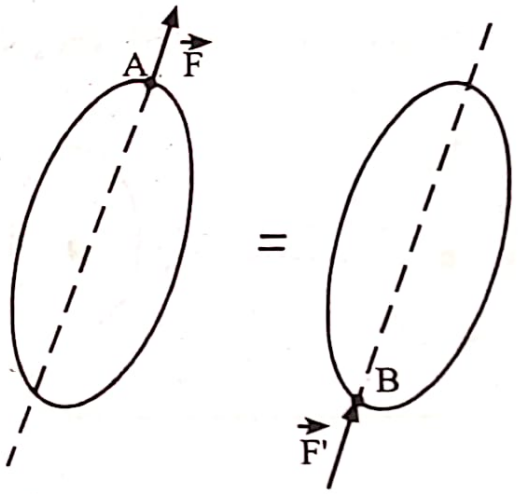


Here, force $\vec{F}$ acting at point A is replaced by a force $\vec{F'}$ such that $|\vec{F}| = |\vec{F'}|$ at B and having same line of action.

Clearly, $\vec{F'} = \vec{F}$

**iii. Newton's First Law**

It states that every body continues to be in the state of rest or motion unless an external force acts upon it.

**iv. Newton's Second Law**

It states that the rate of change of linear momentum is directly proportional to the applied force and it occurs in the direction of applied force.



Scanned with CamScanner

Mathematically,

$$\vec{F} = \frac{d\vec{p}}{dt} = \frac{dm\vec{v}}{dt} = m\frac{d\vec{v}}{dt} = m\vec{a}$$

v. **Newton's Third Law**

It states that to every action, there is an equal and opposite reaction.

vi. **Newton's Law of Gravitation**

It states that every body in the universe attracts other body with a force proportional to the product of their masses and inversely proportional to the square of the distance separating them.

$$F = \frac{G\, m_1 m_2}{d^2}, \text{ where } G = 6.67 \times 10^{-12}\ Nm^2/kg^2$$

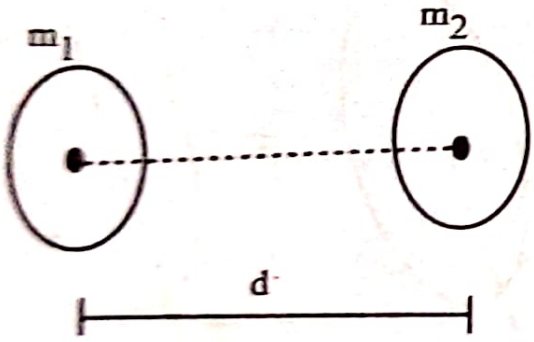




Scanned with CamScanner

CHAPTER - 2

# BASIC CONCEPT IN STATICS AND STATIC EQUILIBRIUM

## 2.1 Concept of Particle and Free Body Diagram

*Particle* means a very small amount of matter which may be assumed to occupy a single point in space. A *rigid body* is a combination of a large number of particles occupying fixed positions with respect to each other.

*Free body diagram* is a sketch of the body (space diagram) drawn in such a way that it shows all the reaction forces, applied forces, and moment on the body.

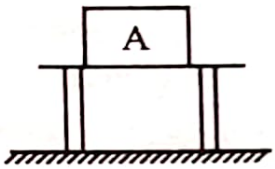


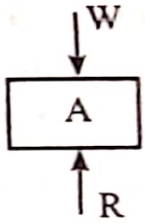


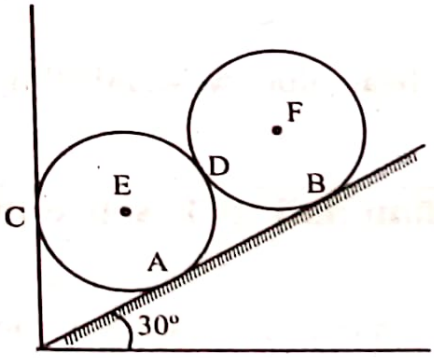


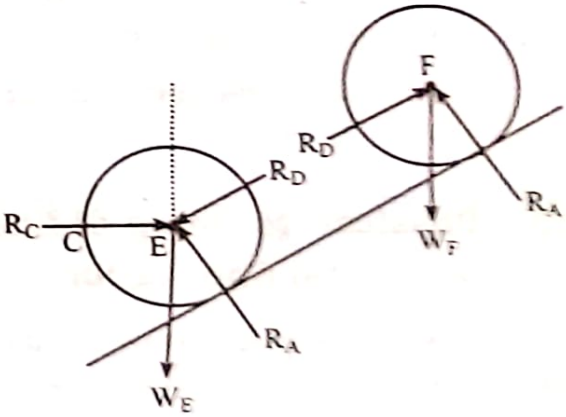


**Importance of free body diagram:**

i. We can analyze the complex body by isolating it from the system of bodies.

ii. We can easily apply equilibrium equation on free body diagram.

iii. Free body diagram is sketch of the isolated body showing all the forces acting on it by vector.



Scanned with CamScanner

iv. We can adopt any co-ordinate system whose axes are not only in horizontal and vertical direction.

v. Free body diagram indicates each applied load including the weight of isolated body.

vi. Free body diagram indicates all the dimensions including slope.

**Guidelines for drawing good free body diagram:**

i. The body to be freed for consideration may be the entire system or any portion of the system. So, it is important to make a clear decision as to which portion of the system is to be freed.

ii. The free body diagram should have no supports or connections.

iii. Any adopted coordinate system whose axes are not in the horizontal or vertical directions should be shown.

iv. Appropriate dimensions are needed for defining appropriate configuration of force system.

v. Each applied load should be indicated with an arrow and labeled either with its known magnitude or with a letter when it is not known.

vi. Action and reaction with an arrow head along with labelling should be done.

## 2.2 Physical Meaning of Equilibrium and its Essence in Structural Application

The physical meaning of *equilibrium* is that the system of the external forces will impart no translational or rotational motion to the body considered.

**Principle of Equilibrium**

*Principle of equilibrium* states that a stationary body which is subjected to coplanar forces (concurrent or parallel) will be in equilibrium if the algebraic sum of all the external forces is zero and also algebraic sum of moments of all the external forces about any point in their plane is zero.



Scanned with CamScanner

Mathematically,

$\Sigma F = 0, \Sigma M = 0$

**Importance of equilibrium in structure analysis:**

Condition of equilibrium is the central theme for structural analysis. Civil engineers analyze and design the structures (bridges, buildings, transmission tower) standing on the concept of equilibrium.

## 2.3 Equation of Equilibrium in Two and Three Dimension

**Two-dimensional (2-D) analysis for equilibrium condition:**

**i. For a particle**

A particle will be in equilibrium condition if algebraic sum of all the coplanar forces acting on it is zero.

$\Sigma \vec{F}_p = 0$; where p denotes particle

Generally, the forces are resolved into horizontal and vertical components.

$\therefore \Sigma(F_x)_p = 0$ and $\Sigma(F_y)_p = 0$

**ii. For a rigid body**

A rigid body will be in equilibrium condition if the algebraic sum of all coplanar external forces is zero and the algebraic sum of moments of all the forces about any point in their plane is zero.

Mathematically,

$\Sigma \vec{F} = 0, \Sigma \vec{M} = 0$

which can be resolved as:

$\Sigma F_x = 0, \Sigma F_y = 0, \Sigma M = 0$

**Three-dimensional (3-D) analysis for equilibrium condition:**

**i. For a particle**

A particle will be in equilibrium condition if algebraic sum of all external forces acting on a point is zero. The external forces considered now may not be necessarily coplanar as 3-D analysis is being performed.



Scanned with CamScanner

Thus, we can write

$\Sigma \vec{F}_p = 0$

On resolving into three reference directions, we have

$\Sigma(F_x)_p = 0, \Sigma(F_y)_p = 0, \Sigma(F_z)_p = 0$

ii. **For a rigid body**

For a rigid body to be in equilibrium condition under the action of external space forces, the algebraic sum of all these forces should be equal to zero.

Thus, the equilibrium equations for 3-D are

$\Sigma \vec{F} = 0, \Sigma \vec{M} = 0$

which can be further resolved as:

$\Sigma F_x = 0, \Sigma F_y = 0, \Sigma F_z = 0$

$\Sigma M_x = 0, \Sigma M_y = 0, \Sigma M_z = 0$

where $\Sigma M_x$ = algebraic sum of moment about yz plane.

$\Sigma M_y$ = algebraic sum of moment about xz plane.

$\Sigma M_z$ = algebraic sum of moment about xy plane.

## SOLUTION TO IMPORTANT QUESTIONS

**1. A container of weight W is subjected from ring A to which cable AB and spring AC are attached. The constant of spring is 100 N/m and its unstretched length is 3 m. Determine the tension in the cable, when (a) W = 120 N (b) W = 160 N.**

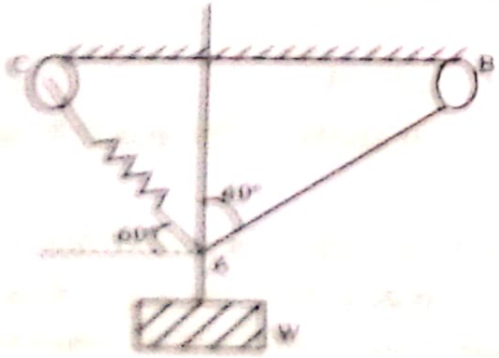




Scanned with CamScanner

**Solution:**

Force exerted by spring ($F_s$) = Kx

where K = spring constant = 100N/m and x = elongation of spring

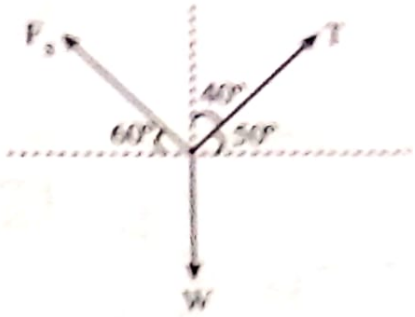


**FBD of the system**

Let T be the tension in the cable AB.

$(\overset{+}{\rightarrow})\ \sum F_x = 0$

or, $T\cos 50° - F_s \cos 60° = 0$

or, $F_s = \dfrac{T\cos 50°}{\cos 60°}$

$(\uparrow +)\sum F_y = 0$

or, $T\sin 50° + F_s \sin 60° - W = 0$

or, $T\sin 50° + \dfrac{T\cos 50°}{\cos 60°}\sin 60° = W$

or, $T = \dfrac{W}{\sin 50° + \dfrac{\cos 50°}{\cos 60°}\sin 60°} = \dfrac{W}{1.88}$

a) When W = 120 N,

$T = \dfrac{120}{1.88} = 63.829$ N

b) When W = 160 N,

$T = \dfrac{160}{1.88} = 85.106$ N

**2. A commercial vessel is being pulled into harbour for unloading by two tugboats as shown in figure. Knowing the vessel requires 150 KN along its axis to move it steadily, compute the tensions in rope AB and BC when α = 40°.**



Scanned with CamScanner

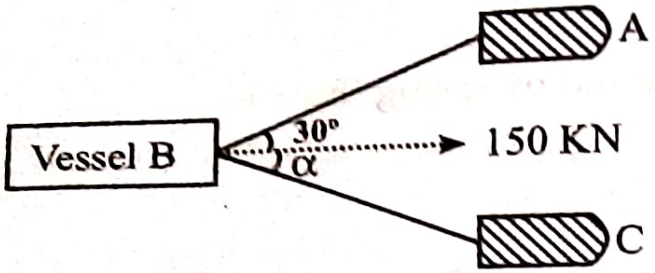


**Solution:**

Let $T_{AB}$ and $T_{BC}$ be tension in the ropes as shown in figure.

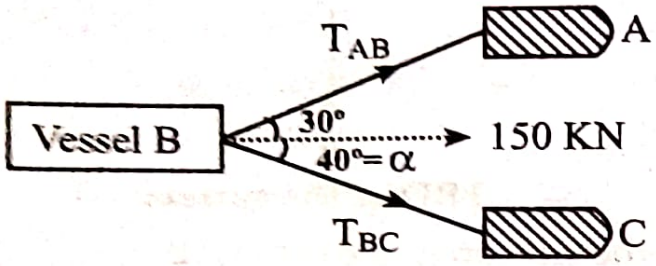


$(\overset{+}{\rightarrow}) \sum F_x = 0$

or, $T_{AB} \cos 30° + T_{BC} \cos 40° = 150$ .....(i)

$(+\uparrow) \sum F_y = 0$

or, $T_{AB} \sin 30° = T_{BC} \sin 40°$

or, $T_{AB} = 2T_{BC} \sin 40°$ .....(ii)

From (i) & (ii),

$2T_{BC} \cos 30° + T_{BC} \cos 40° = 150°$

Solving, we get

$T_{BC} = 79.81$ KN

Substituting this value of $T_{BC}$ in (ii), we get

$T_{AB} = 2 \times 79.81 \sin 40° = 102.61$ KN

Hence, the tensions in the rope AB & BC are $T_{AB} = 102.61$ KN and $T_{BC} = 79.81$ KN respectively.

**3. Determine the reactions at the contact points, if three cylinders are piled in a rectangular ditch as shown in figure. Given that the weight of the cylinders are: $W_A$= 2KN, $W_B$ = 5 KN, $W_C$ = 3 KN.**



Scanned with CamScanner

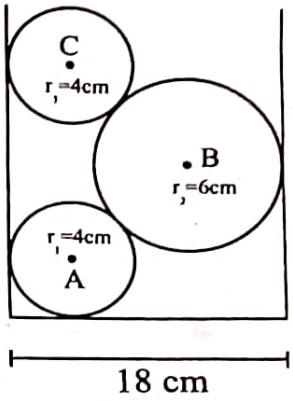


**Solution:**

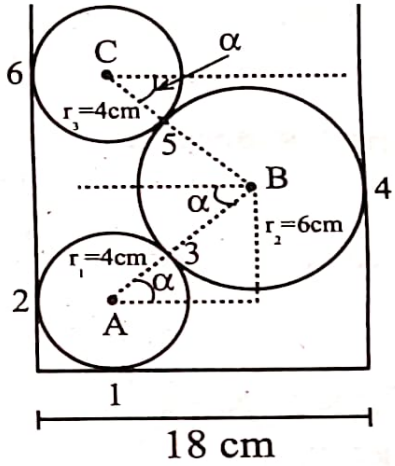


From the figure above,

$$\alpha = \cos^{-1}\left(\frac{18-4-6}{4+6}\right) = \cos^{-1}\left(\frac{4}{5}\right) = 36.87°$$

**FBD of C:**

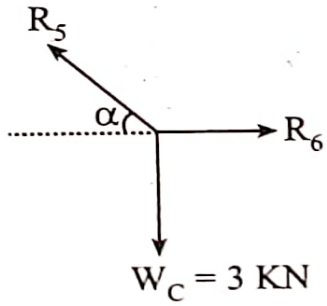


$(+\uparrow)\Sigma F_y = 0$

$\Rightarrow \quad -W_C + R_5 \sin\alpha = 0$

$$\Rightarrow \quad R_5 = \frac{W_C}{\sin\alpha} = \frac{3}{\sin 36.87°} = 5 \text{ KN } (\ldots\ldots\alpha)$$



Scanned with CamScanner

$(\overrightarrow{+})\Sigma F_y = 0$

$\Rightarrow \quad R_6 - R_5\cos\alpha = 0$

$\therefore \quad R_6 = R_5\cos\alpha = 4\ KN\ (\rightarrow)$

**FBD of B:**

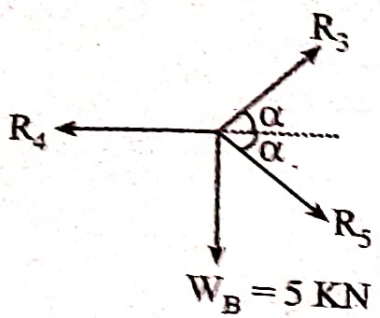


$(+\uparrow)\Sigma F_y = 0$

$\Rightarrow \quad -W_B - R_5\sin\alpha + R_3\sin\alpha = 0$

$\Rightarrow \quad R_3 = 13.33\ KN\ (\angle\alpha)$

$(\overrightarrow{+})\Sigma F_x = 0$

$\Rightarrow \quad R_3\cos\alpha + R_5\cos\alpha - R_4 = 0$

$\Rightarrow \quad R_4 = 14.66\ KN\ (\leftarrow)$

**FBD of A:**

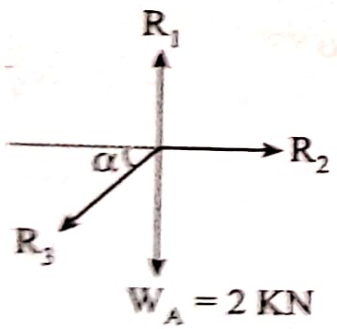


$(\overrightarrow{+})\ \Sigma F_x = 0$

$\Rightarrow \quad R_2 - R_3\cos\alpha = 0$

$\Rightarrow \quad R_2 = 10.66\ KN\ (\rightarrow)$

$(+\uparrow)\Sigma F_y = 0$

$\Rightarrow \quad R_1 - W_A - R_3\sin\alpha = 0$

$\Rightarrow \quad R_1 = W_A + R_3\sin\alpha = 10\ KN$



Scanned with CamScanner

**4. The cylinders A and C weigh 1000 N each and the weight of the cylinder is 2000 N. Determine the forces exerted at the contact points.**

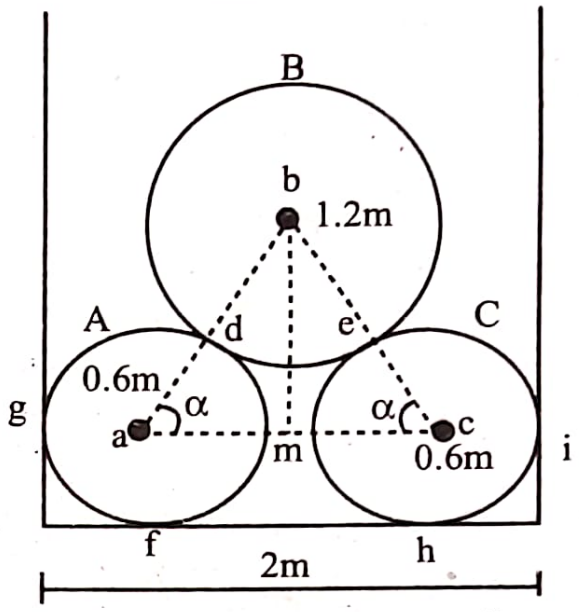


**(The given values 1.2m and 0.6m are diameter)**

**Solution:**

Cylinder B has only two unknown (reactions at d and reactions at e)

ac = 2 – 0.3 – 0.3= 1.4 m

$$am = \frac{1.4}{2} = 0.7m$$

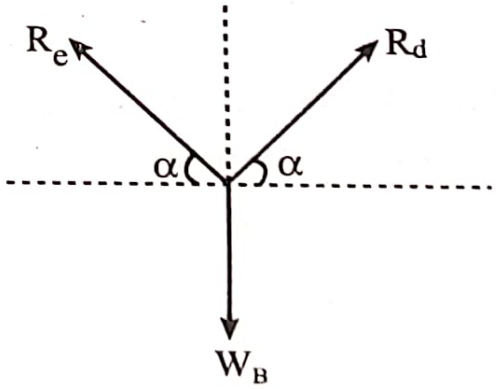


**FBD of cylinder B**

Since ab = bc,

$\angle bac = \angle bca = \alpha$

$$\cos\alpha = \frac{am}{ab} = \frac{0.7}{0.9} \Rightarrow \alpha = 38.94^{o}$$



Scanned with CamScanner

For cylinder B,

$(\overset{+}{\rightarrow})\Sigma F_x = 0$

or, $R_d \cos\alpha - R_e \cos\alpha = 0$

or, $R_d = R_e$

$(+\uparrow)\ \Sigma F_y = 0$

or, $R_d \sin\alpha + R_e \sin\alpha = W_B$

or, $R_d = \dfrac{2000}{2\sin 38.94^\circ} = 1591.07$ N

$\therefore R_e = R_d = 1591.07$ N

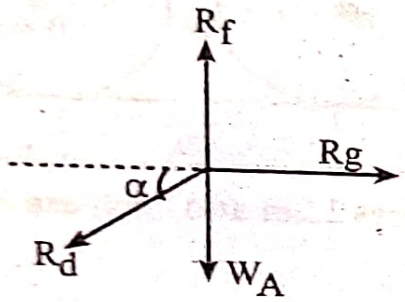


**FBD of cylinder A**

For cylinder A,

$(\overset{+}{\rightarrow})\sum F_x = 0$

or, $-R_d \cos\alpha + R_g = 0$

or, $R_g = R_d \cos\alpha = 1597.07 \cos 38.94^\circ = 1237.54$ N

$(+\uparrow)\ \Sigma F_y = 0$

or, $R_f - R_d \sin\alpha - W_A = 0$

or, $R_f = 1237.54 \sin 38.94^\circ + 1000 = 1777.80$ N

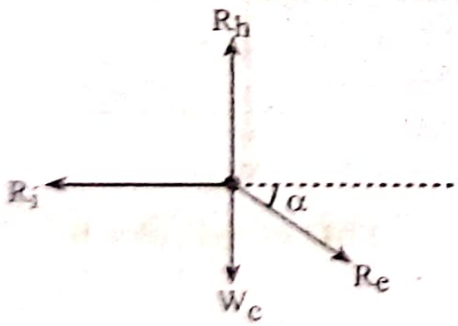


**FBD of cylinder C**

For cylinder C,

$(\overset{+}{\rightarrow})\sum F_x = 0$



Scanned with CamScanner

or, $(R_e)\cos\alpha - R_i = 0$

or, $R_i = (R_e)\cos\alpha = 1591.07\cos 38.99^\circ = 1237.54$ N

$(+\uparrow)\ \Sigma F_y = 0$

or, $R_h - W_c - R_e\sin\alpha = 0$

or, $R_h = 1000 + 1237.54\sin 38.94^\circ = 1777.30$ N

**5. A vehicle needs to be moved forward by two pullers A and B. Puller 'A' is at 40° to the axis of movement. Compute the value of angle 'α' for which puller 'B' has to exert minimum force. Also compute the respective values of pull to be exerted.**

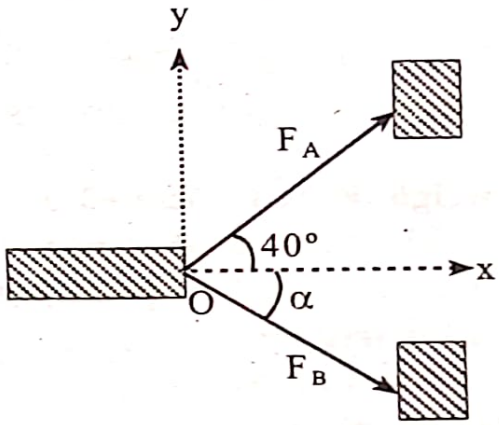


**Solution:**

Let $F_A$ be the applied force along OA and $F_B$ be along OB. We have to move the vehicle in the forward direction. For moving vehicle,

$(\overset{+}{\rightarrow})\ \Sigma F_x = 50$KN

or, $F_A\cos 40^\circ + F_B\cos\alpha = 50$ KN

or, $0.76\cos 40^\circ + F_B\cos\alpha = 0$ .....(i)

In vertical direction, the vehicle can't move. So,

$(+\uparrow)\ \Sigma F_y = 0$

or, $F_A\sin 40^\circ - F_B\sin\alpha = 0$

or, $F_A = 1.56\ F_B\sin\alpha$ .....(ii)

Using the value of $F_A$ in (i),

$1.192\ F_B\sin\alpha + F_B\cos\alpha = 50$



Scanned with CamScanner

or, $F_B = \dfrac{50}{1.192\sin\alpha + \cos\alpha}$ .....(iii)

For force $F_B$ to be minimum, $\dfrac{dF_B}{d\alpha} = 0$

or, $\dfrac{d}{d\alpha}\left(\dfrac{50}{1.192\sin\alpha + \cos\alpha}\right) = 0$

Solving, we get

$1.192\cos\alpha = \sin\alpha$

or, $\tan\alpha = 1.192$

$\therefore \alpha = 50^\circ$

From eq. (iii), $F_B = \dfrac{50}{1.192\sin 50^\circ + \cos 50^\circ} = 32.14$ KN

From eq. (ii), $F_A = 1.56 \times 32.14 \sin 50^\circ = 38.31$ KN

**6. A block of weight W is suspended by a cord AC and two springs of which the unstretched length of 25 cm. Knowing that the constant of spring are AB = 10N/cm and AD = 3.5 N/cm, determine:**

**a. Tension in the cord AC**

**b. Weight of the block**

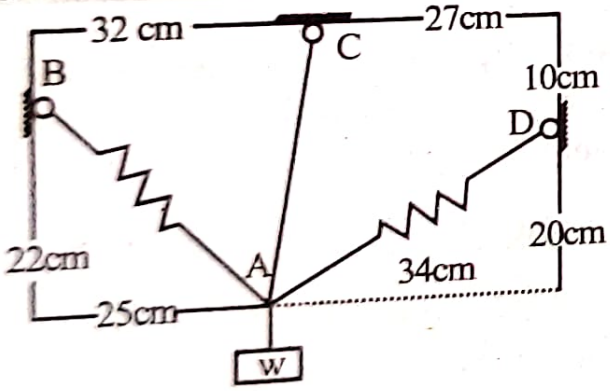


**Solution:**

Unstretched length of spring AB and AD = 25 cm

Stretched length of spring AB = $\sqrt{25^2 + 22^2} = 33.30$ cm

Total extension of spring AB (x) = 33.30 – 25 = 8.30 cm

$F_{AB} = K_{AB} \times x = 10 \times 8.30 = 83$ N

Stretched length of spring AD = $\sqrt{34^2 + 20^2} = 39.45$ cm



Scanned with CamScanner

Total extension of spring AD (x) = 39.45 – 25 = 14.45 cm

$F_{AD} = K_{AD} \times x = 3.5 \times 14.45 = 50.58$ N

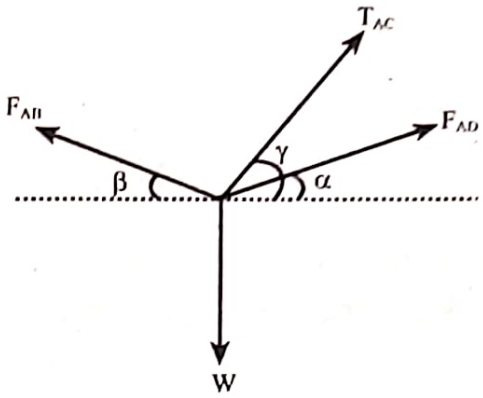


**FBD of A**

From the fig. (see question),

$\alpha = \tan^{-1}\left(\frac{20}{34}\right) = 30.47°$, $\beta = \tan^{-1}\left(\frac{22}{25}\right) = 41.35°$,

$\gamma = \tan^{-1}\left(\frac{30}{34-27}\right) = 76.87°$

$\left(\overset{+}{\rightarrow}\right) \Sigma F_x = 0$

$F_{AD}\cos\alpha - F_{AB}\cos\beta + T_{AC}\cos\gamma = 0$

or, $T_{AC} = \frac{F_{AD}\cos\alpha - F_{AB}\cos\beta}{\cos\gamma} = 82.38$ N

$(+\uparrow)\ \Sigma F_y = 0$

or, $T_{AC}\sin\gamma + F_{AB}\sin\beta + F_{AB}\sin\alpha - W = 0$

$\therefore W = 160.71$N

**7. Determine the values of the unknown forces P and Q for the system of forces to be in equilibrium.**

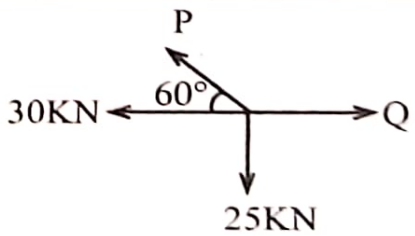


**Solution:**

$(+\uparrow)\ \Sigma F_y = 0$

or, $P\sin 60° - 25 = 0$



Scanned with CamScanner

or, $P = \frac{25}{\sin 60°} = 28.87$ KN (↑)

$(\overset{+}{\rightarrow})\ \Sigma F_x = 0$

or, $Q - 30 - P\cos 60° = 0$

or, $Q = 30 + 28.87\cos 60° = 44.43$ KN (→)

**8. Determine the force in each cable and the force 'F' needed to hold the 20 kg lamp in the position shown in figure as below.**

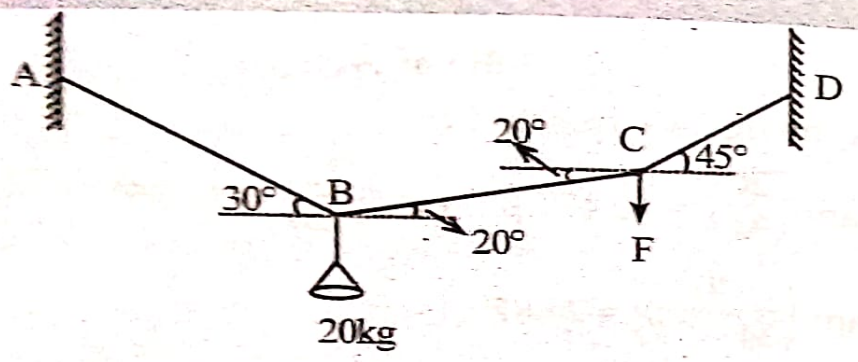


**Solution:**

Considering FBD of lamp,

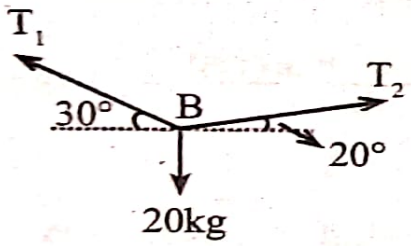


$(\overset{+}{\rightarrow})\ \Sigma F_x = 0$

or, $-T_1\cos 30° + T_2\cos 20° = 0$

or, $T_1\cos 30° = T_2\cos 20°$

or, $T_1 = 1.085T_2$..... (i)

$(+\uparrow)\ \Sigma F_y = 0$

or, $T_1\sin 30° + T_2\sin 20° - 20 = 0$

or, $1.085\sin 30° T_2 + T_2\sin 20° = 20$

or, $T_2 = \frac{20}{1.085\sin 30° + \sin 20°} = 22.61$ N

$\therefore T_1 = 22.61 \times 1.085 = 24.53$ N



Scanned with CamScanner

Considering FBD at point C,

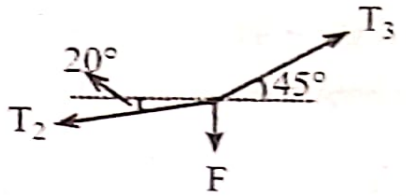


$(\xrightarrow{+})\ \Sigma F_x = 0$

or, $-T_2\cos20° + T_3\cos45° = 0$

or, $T_3 = \dfrac{T_2\cos20°}{\cos45°} = \dfrac{22.61 \times \cos20°}{\cos45°} = 30.05\ N$

**9. The boat is to be pulled onto the shore using two ropes. if the resultant force is to be $F_1$(80N), directed along the keel a-a as shown. Determine the magnitude of forces T and P acting in each rope and the angle θ of P so that the magnitude of P is a minimum. T acts at θ from the keel as shown.**

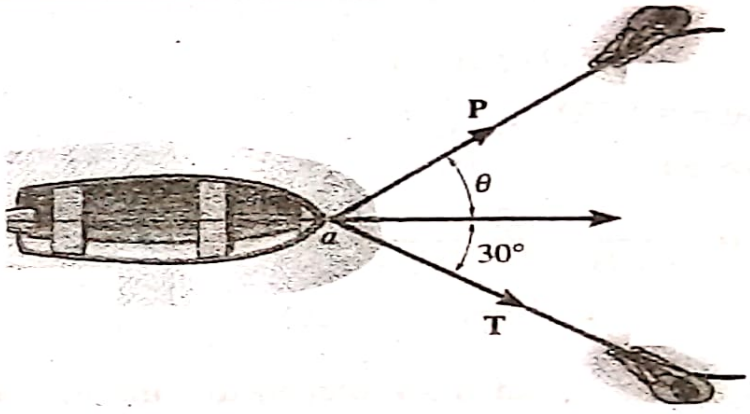


**[2016 Fall, PoU]**

**Solution:**

The figure can be drawn as:

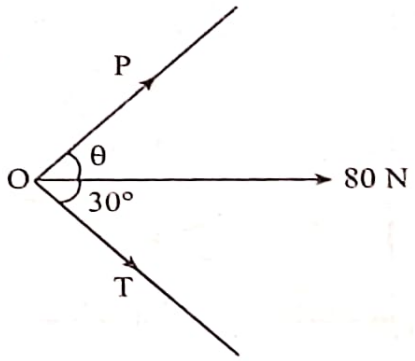




Scanned with CamScanner

$(\xrightarrow{+})\ \Sigma F_x = 80$

or, $P\cos\theta + T\cos30° = 80$

or, $P\cos\theta + T(0.866) = 80$ .....(i)

$(+\uparrow)\ \Sigma F_y = 0$

or, $P\sin\theta - T\sin30° = 0$

or, $T = 2P\sin\theta$ .....(ii)

Substituting (ii) in (i)

$P\cos\theta + 0.866\ (2\ P\sin\theta) = 80$

or, $P\cos\theta + 1.732\ P\sin\theta = 80$

or, $P(\cos\theta + 1.732\ \sin\theta) = 80$

or, $P = \dfrac{80}{\cos\theta + 1.732\ \sin\theta}$

For, magnitude of P to be minimum, the term "$\cos\theta + 1.732\sin\theta$" must be maximum. So,

$\dfrac{d}{d\theta}(\cos\theta + 1.732\ \sin\theta) = 0$

or, $-\sin\theta + 1.732\ \cos\theta = 0$

or, $\tan\theta = 1.732$

or, $\theta = 60°$

Then, $P = \dfrac{80}{\cos60 + 1.732\sin60} = 40$ N

$T = 2 \times 40 \times \sin60 = 69.28$N

**10. Two spheres A and B are placed in container as shown in figure. Determine the reactions from wall of container.**
**$r_A = 12$ cm, $r_B = 6$ cm**
**$m_A = 12$ kg, $m_B = 10$ kg**

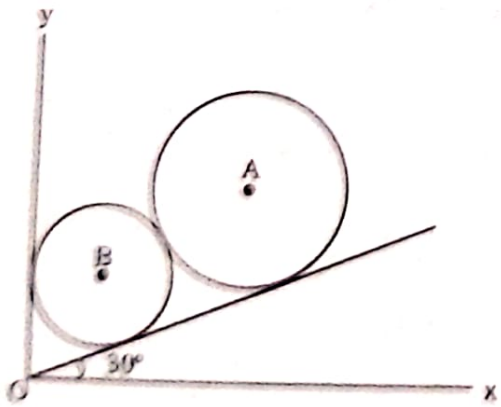


**[2017, 2015 Fall PoU, 2015 PU]**



Scanned with CamScanner

**Solution:**

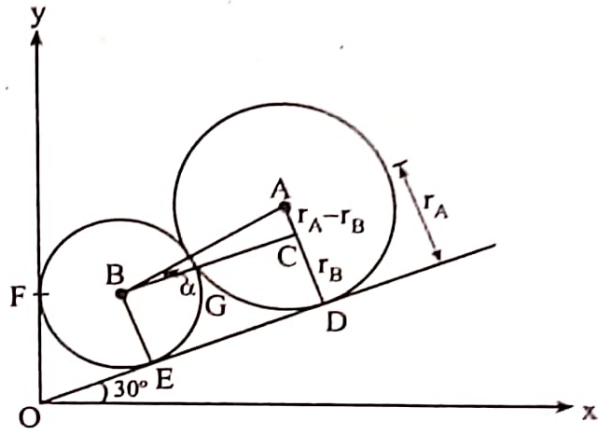


The contact points are named D, E, F and G. We notice BC is parallel to ED

From $\Delta ACB$, $\sin\alpha = \frac{AC}{AB} = \frac{r_A - r_B}{r_A + r_B} = \frac{12-6}{12+6} = \frac{6}{18}$

$\Rightarrow \quad \alpha = 19.47°$

Let us consider sphere A first, as there are only two unknown reactions.

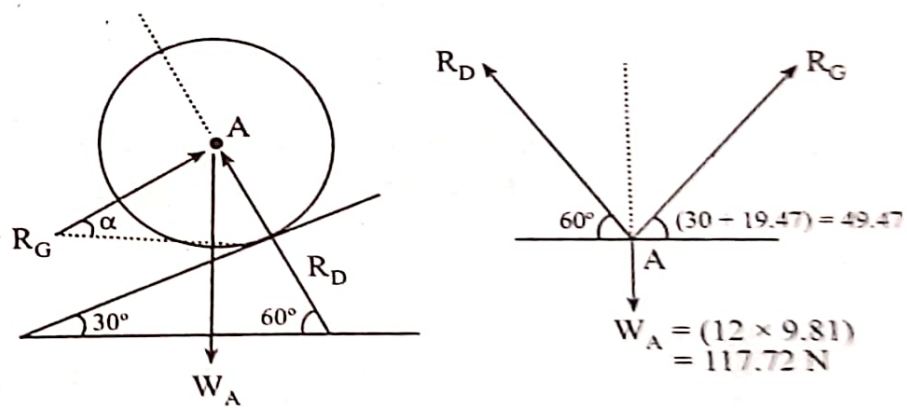


FBD of sphere A

$(\overset{+}{\rightarrow})\Sigma F_x = 0$

or, $R_G \cos 49.47° - R_D \cos 60° = 0$

or, $R_D = 1.29\ R_G$ .....(i)

$(+\uparrow)\Sigma F_y = 0$

or, $R_D \sin 60° + R_G \sin 49.47° - (12 * 9.81) = 0$

or, $1.29\ R_G \sin 60° + R_G \times 0.76 = 117.72$ [Using equation (i)]

or, $1.87\ R_G = 117.72$

or, $R_G = 62.9$ N

So, $R_D = 81.1$ N



Scanned with CamScanner

Now, For sphere B,

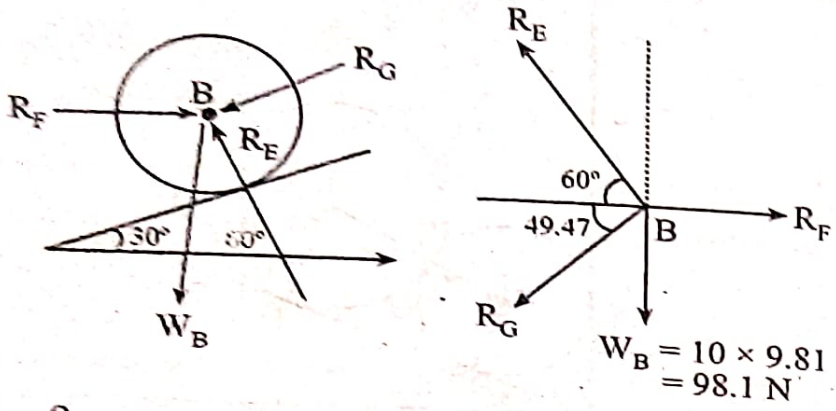


$(+\uparrow)\ \Sigma F_y = 0$

or, $R_E \sin 60° - R_G \sin 49.47° - 98.1 = 0$

or, $R_E \sin 60° - 62.9 \sin 49.47° - 98.1 = 0$

or, $R_E = 168.48$ N

$(\overset{+}{\rightarrow})\ \Sigma F_x = 0$

or, $R_F - R_G \cos 49.47° - R_E \cos 60° = 0$

or, $R_F - 62.9 \cos 49.47° - 168.48 \cos 60° = 0$

or, $R_F = 125.11$ N

**11. Determine the reaction on the sphere if the bottom channel 360 mm wide with one side vertical.**

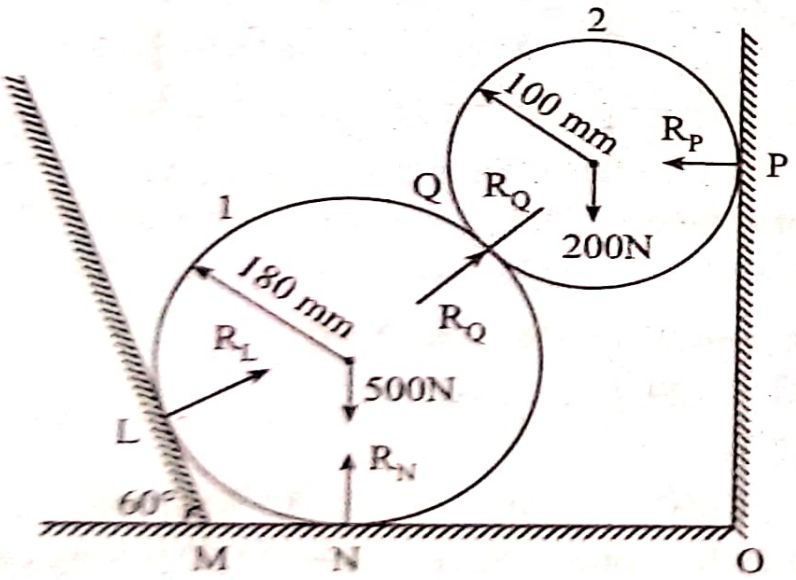


**[2018 Spring, POU]**



Scanned with CamScanner

**Solution:**

Here, we have to determine the reaction $R_L$, $R_N$, $R_Q$ and $R_P$

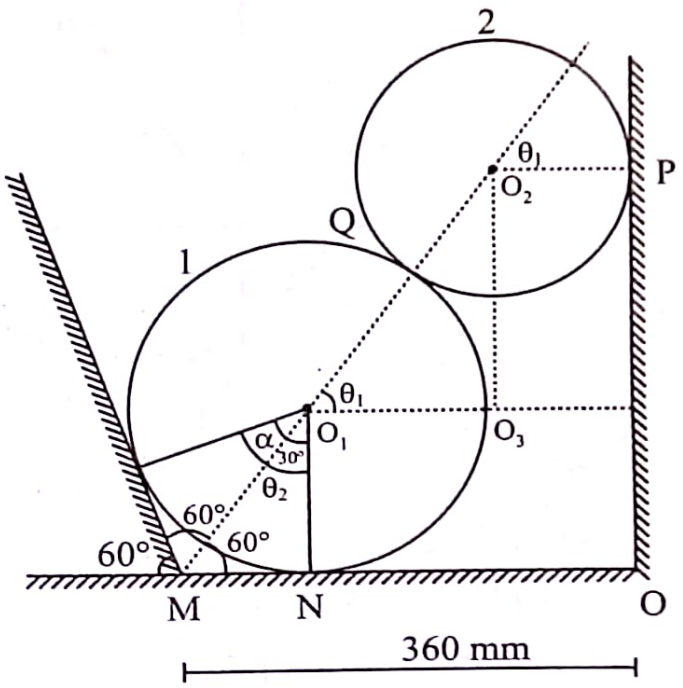


In $\Delta MO_1N$, $\angle MO_1N = 30°$

$$\text{Tan } 30° = \frac{MN}{O_1N}$$

or, $MN = 180 \times \tan 30°$

or, $MN = 103.92$ mm

$O_1O_3 = 360 - MN - 100$

or, $O_1O_3 = 360 - 103.92 - 100$

or, $O_1O_3 = 156.08$ mm

In $\Delta O_1O_2O_3$,

$$\cos\theta_1 = \frac{O_1O_3}{O_1Q + O_2Q} = \frac{156.08}{180 + 100}$$

or, $\theta_1 = 56.12°$

By geometry,

$\theta_2 = 30° + \alpha$

$\theta_2 = 30° + 30° = 60°$ [Since, $\alpha = 90° - 60° = 30°$]

$\angle O_1O_2O_3 = 90° - \theta_1 = 33.88°$



Scanned with CamScanner

**FBD of sphere 2**

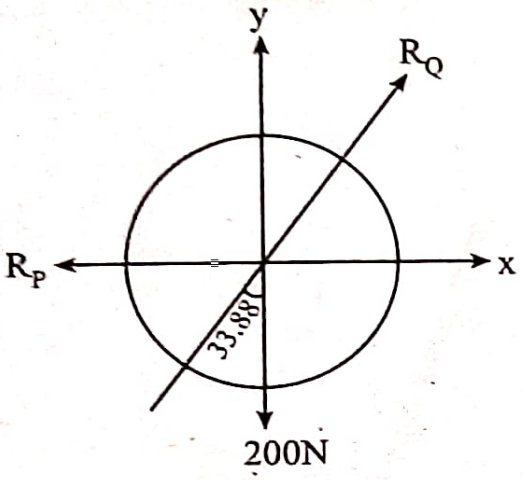


$(+\uparrow)\ \Sigma F_y = 0$

or, $R_Q \cos 33.88° - 200 = 0$

or, $R_Q = 240.9$ N

$(\xrightarrow{+})\ \Sigma F_x = 0$

or, $R_Q \sin 33.88° - R_P = 0$

or, $R_P = 134.23$ N

**FBD of sphere 1**

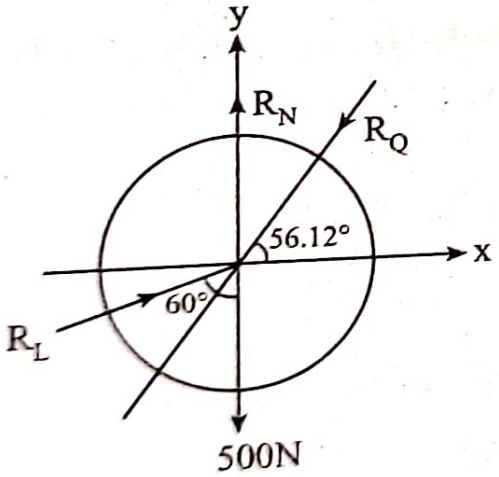


$(\xrightarrow{+})\ \Sigma F_x = 0$

or, $-R_Q \cos 56.12° + R_L \sin 60° = 0$

or, $R_L \sin 60° = 134.29$

or, $R_L = 155.065$ N

$(+\uparrow)\ \Sigma F_y = 0$



Scanned with CamScanner

or, $-R_Q \sin 56.12 - 500 + R_N + R_L \cos 60° = 0$

or, $-240.9 \sin 56.12 - 500 + R_N = 155.065 \cos 60 = 0$

or, $R_N = 622.46$ N

$\therefore$ $R_Q = 240.9$ N, $R_P = 134.23$ N,

$R_L = 155.065$ N, $R_N = 622.46$ N

**12. Two homogenous spherical ball rests between two vertical walls as shown in the figure. The radius of larger ball is 26 cm and weight is 40N. The distance between the walls is 80 cm. The radius of smaller ball is 20 cm and weight is 25 N. Assuming the contact surfaces to be smooth, determine the reaction forces at all contact point.**

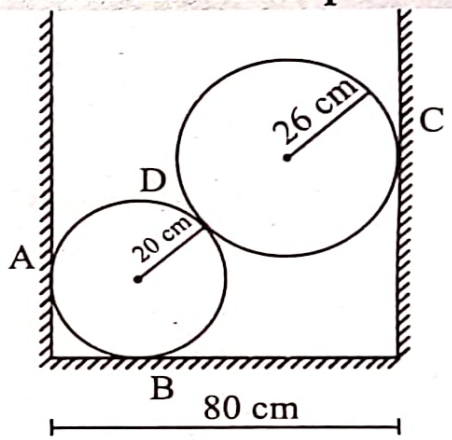


**Solution:**

Weight of smaller ball ($W_1$) = 25 N

Weight of larger ball ($W_2$) = 40 N

We have to determine the reactions developed from the contact points A, B, C and D.

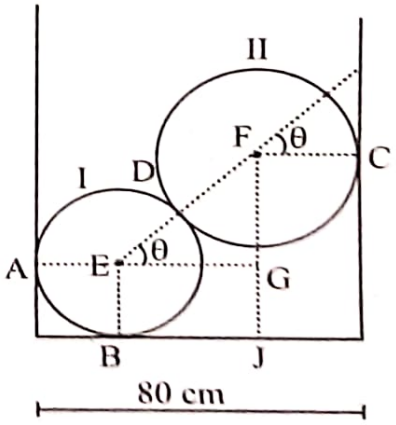




Scanned with CamScanner

$EG = BJ = 80 - 20 - 26 = 34$ cm

In $\Delta$ EFG, $\cos\theta = \frac{EG}{EF} = \frac{34}{20+26} = \frac{34}{46}$

$\Rightarrow \theta = 42.34°$

**FBD of sphere II,**

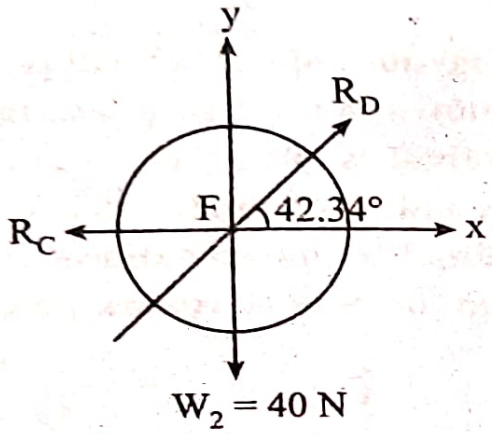


$(+\uparrow)\ \Sigma F_y = 0$

or, $R_D \sin 42.34° - 40 = 0 \Rightarrow R_D = 59.38$ N

$(\overset{+}{\rightarrow})\ \Sigma F_x = 0$

or, $R_D \cos 42.34° - R_C = 0 \Rightarrow R_C = 43.89$ N

**FBD of sphere I,**

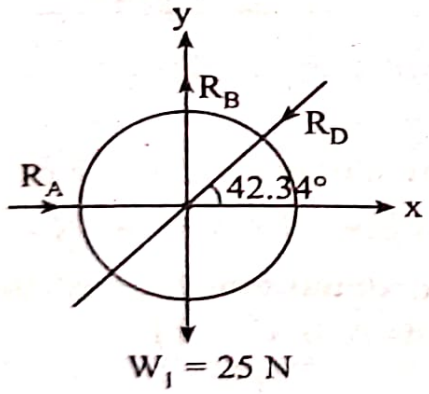


$(\overset{+}{\rightarrow})\ \Sigma F_x = 0$

or, $R_A - R_D \cos 42.34° = 0$

or, $R_A = 43.89 \cos 42.34° = 32.44$ N

$(+\uparrow)\ \Sigma F_y = 0$

or, $R_B - 25 - R_D \sin 42.34° = 0$.

or, $R_B - 25 - 43.89 \sin 42.34° = 0$

$\therefore$ $R_B = 54.56$ N



Scanned with CamScanner

**13.** **Two spheres I and II of radii 100 cm and 50 cm respectively are placed on a container as shown in the figure. Sphere I of mass 50 kg is suspended with a string AB of length 200 cm and sphere II of mass 25 kg is placed on top of it. Determine the tension on AB and the reaction from container.**

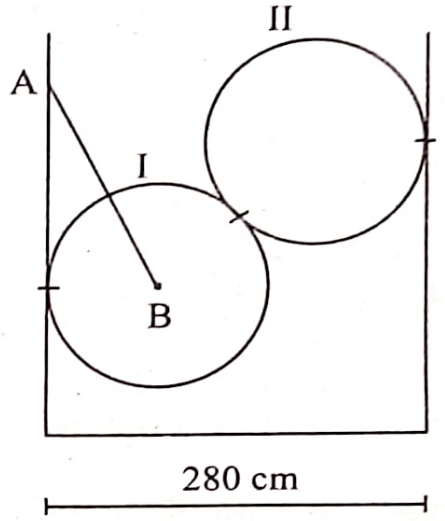


**[2019 Fall, PoU]**

**Solution:**

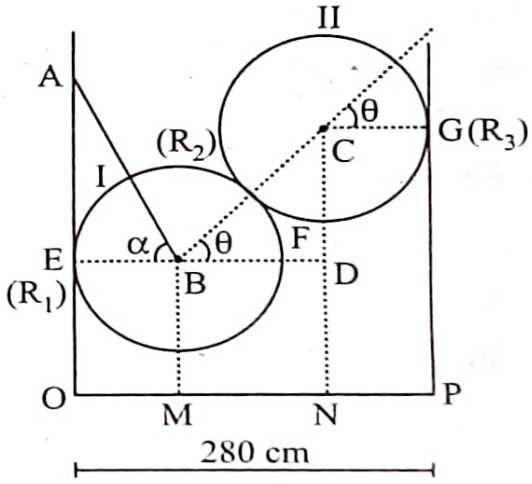


There are three contact point E, F and G. Let, $R_1$, $R_2$ and $R_3$ be the reaction developed at those contact point. Simple construction for the calculation of angle is shown in figure.

In $\Delta AEB$,

EB = radius of sphere I = 100 cm

or, $\cos\alpha = \dfrac{EB}{AB}$

or, $\alpha = \cos^{-1}\left(\dfrac{100}{200}\right) = 60°$ [AB = 200 cm]



Scanned with CamScanner

$BD = 280 - R_I - R_{II}$

$= 280 - OM - NP = 280 - 100 - 50 = 130$ cm

In $\Delta CBD$, $\cos\theta = \frac{BD}{BC} = \frac{130}{R_I + R_{II}} = \frac{130}{100 + 50} = \frac{130}{150}$

$\therefore \quad \theta = 29.92°$

FBD of spheres II and I are shown below.

II.

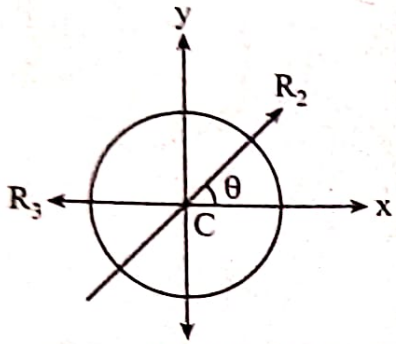


$W_{II} = 25 \times 9.81 = 245.25$ N

Applying equation of equilibrium,

$(+\uparrow)\ \Sigma F_y = 0$

or, $R_2 \sin\theta - 245.25 = 0$

or, $R_2 \sin 29.92° = 245.25$

or, $R_2 = 491.68$N

$(\xrightarrow{+})\ \Sigma F_x = 0$

or, $R_2 \cos\theta - R_3 = 0$

or, $491.68 \cos 29.92° = R_3$

$\therefore R_3 = 426.15$ N

I.

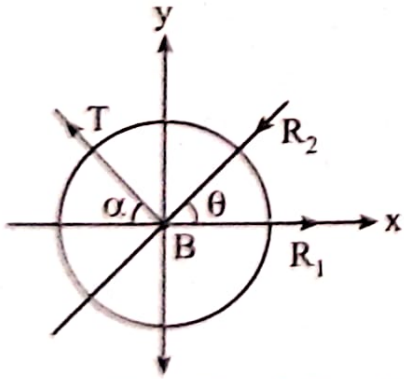


$W_I = 50 \times 9.81 = 490$ N

Let, T be the tension on string AB



Scanned with CamScanner

$(+\uparrow)\ \Sigma F_y = 0$

or, $T \sin\alpha - R_2 \sin\theta - 490 = 0$

or, $T \sin 60° - 491.68 \sin 29.92° = 490$

or, $T \sin 60° = 735.74$

or, $T = 849.56N$

$(\overset{+}{\rightarrow})\ \Sigma F_x = 0$

or, $R_1 - T \cos\alpha - R_2 \cos\theta = 0$

or, $R_1 - 849.56 \cos 60° - 491.68 \cos 29.92° = 0$

$\therefore R_1 = 850.93$ N

**14. A load Q is applied to the pulley C, which can roll on the cable ACB. The pulley is held on the position shown by a second cable. Knowing that P = 900N, determine:**
**i. tension on the cable ACB**
**ii. magnitude of the load Q**

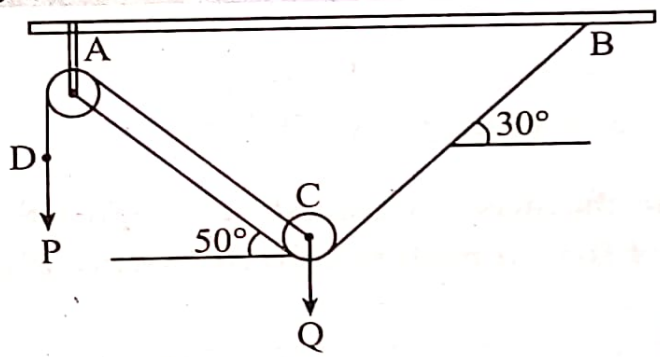


**[2014 Fall, PoU]**

**Solution:**

Let, tension on the cable ACB be T and DAC be $T_1$

At point D,

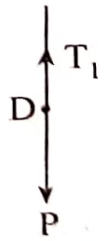


$(+\uparrow)\ \Sigma F_y = 0$

or, $T_1 - P = 0 \Rightarrow T_1 = 900$ N



Scanned with CamScanner

So, tension throughout the cable DAC is 900 N as for the same string, tension induced is same throughout.

At point C

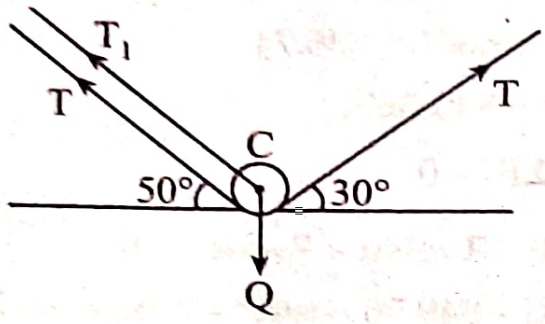


$(\overrightarrow{+})\Sigma F_x = 0$

or, $T\cos30° - T\cos50° - 900\cos50° = 0 \Rightarrow T = 2591.45$ N

$(+\uparrow)\ \Sigma F_y = 0$

or, $T\sin30° + T\sin50° + 900\sin50° - Q = 0$

or, $Q = 2591.45\sin30° + 2591.45\sin50° + 900\sin50°$

$\Rightarrow$ $Q = 3970.33$N

i. Tension in the cable ACB is 2591.45N

ii. Magnitude of load (Q) = 3970.33N

**15. Determine the mass that must be supported at A and the angle (θ) of the connecting cord in order to hold the system in equilibrium.**

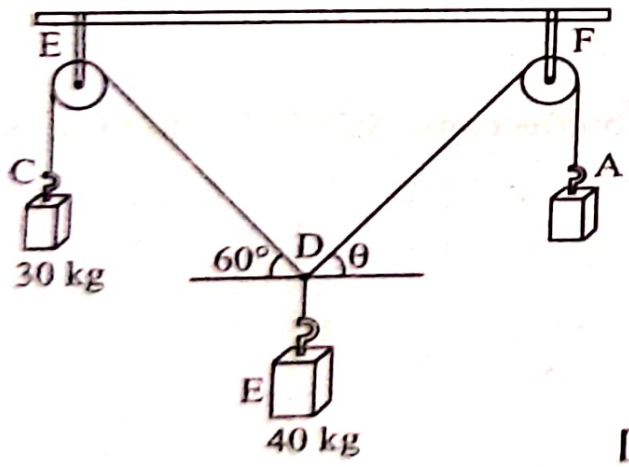


**[2014 spring, PoU]**

**Solution:**

Let, the mass supported at A be $M_A$ kg

At point C,



Scanned with CamScanner

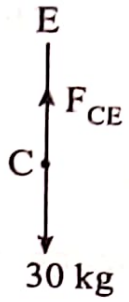


$(+\uparrow)\Sigma F_y = 0$

or, $F_{CE} = 30$ kg

At point A

$(+\uparrow)\Sigma F_y = 0$

or, $F_{AF} = M_A$ kg

Here, Force throughout the cord CED is 30 kg and force throughout the cord AFD be $M_A$ kg as tension induced is same throughout for continuous cord.

At point D,

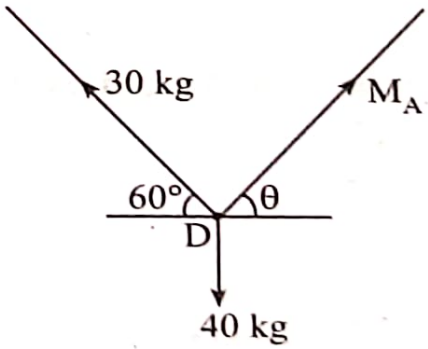


$(\overrightarrow{+})\Sigma F_x = 0$

or, $M_A\cos\theta - 30\cos 60° = 0$

or, $M_A\cos\theta = 15$ .....(i)

$(+\uparrow)\Sigma F_y = 0$

or, $30\sin 60° + M_A\sin\theta - 40 = 0$



Scanned with CamScanner

or, $M_A \sin\theta = 14.02$ .....(ii)

Dividing (ii) by (i)

$$\frac{M_A \sin\theta}{M_A \cos\theta} = \frac{14.02}{15} \Rightarrow \tan\theta = 0.934 \Rightarrow \theta = 43.04°$$

Substituting θ in equation (i),

$$M_A = \frac{15}{\cos(43.04°)} = 20.52 \text{ kg}$$

∴ Mass supported at A is 20.52 kg and angle (θ) = 43,04°

**16. Determine the forces in the cable AB and AC required to hold the ball of mass = 35 kg as shown in the figure to be in equilibrium. The tension on the cable AD = 200N**

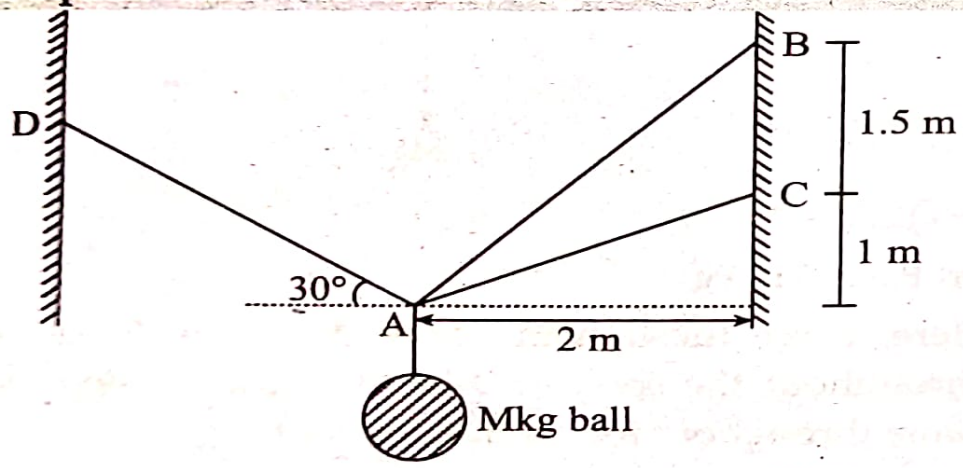


**[2020 spring, PoU]**

**Solution:**

Let, forces in the cable AB and AC be $T_1$ and $T_2$ respectively.

FBD at point A:

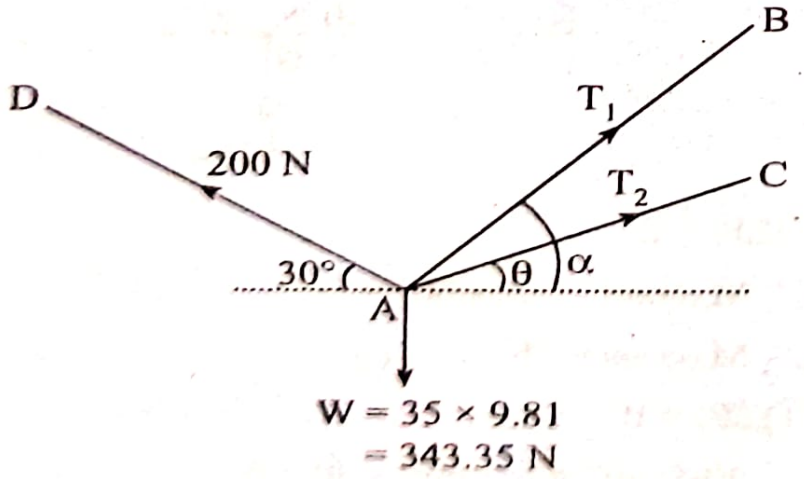




Scanned with CamScanner

From figure: $\tan\alpha = \frac{2.5}{2} \Rightarrow \alpha = 51.34°$

$\tan\theta = \frac{1}{2} \Rightarrow \theta = 26.56°$

Applying equation of equilibrium,

$(\overrightarrow{+})\Sigma F_x = 0$

or, $T_1\cos 24.78° + T_2\cos 26.56° - 200\cos 30° = 0$

or, $0.907T_1 + 0.894T_2 = 173.2$ ..... (i)

$(+\uparrow)\Sigma F_y = 0$

or, $T_1\sin 24.78° + T_2\sin 26.56° + 200\sin 30° - 343.35 = 0$

or, $0.419T_1 + 0.447T_2 = 243.35$ .....(ii)

Solving (i) and (ii),

$T_1 = -4543.47$ N

$T_2 = 4803.28$ N



Scanned with CamScanner

CHAPTER - 3

# FORCES ACTING ON PARTICLE AND RIGID BODY

## 3.1 Force

*Force* is defined as an external agent which changes or tends to change the speed, direction, or shape of system.

The characteristics of force are:

- Force has both magnitude and direction. So, it is a vector quantity.
- Force has point of application.
- Force is a transmissible vector i.e., it can be moved along its line of action.

Forces may be classified as:

1. **Point force**
   - It is a force which is assumed to act through point.
2. **Body force**
   - It is a force which acts on each element of body. Examples: gravitational force, inertia force, electromagnetic force, etc.
3. **Surface force**
   - It is a force which acts on the surface or area elements of the body. When the area considered lies on the actual boundary of the body, the surface force distribution is termed as *surface traction*.

Force may also be classified as:

1. **Translation force**
   - The force which moves or tends to move a body from one point to another point is called *translation force*.
2. **Rotational force**
   - The force which rotates or tends to rotate a body around a central axis is called *rotational force*.



Scanned with CamScanner

## 3.2 Principle of Transmissibility and Equivalent Forces

### Principle of Transmissibility of Force

It states that the condition of equilibrium or of motion of a rigid body will remain unchanged if a force $\vec{F}$ acting at a given point of the rigid body is replaced by a force $\vec{F'}$, of the same magnitude and direction, but acting at different point, provided that the two forces have the same line of action.

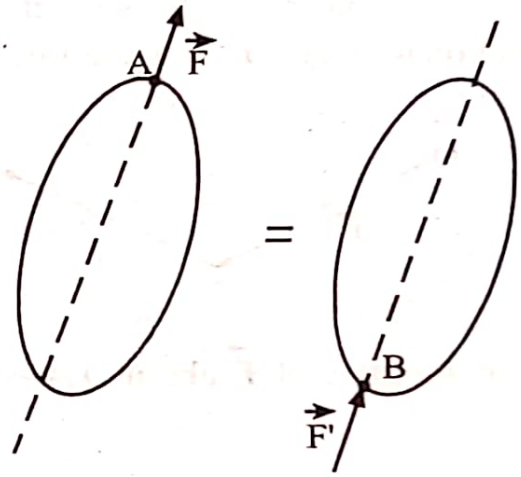


Here, Force $\vec{F}$ acting at point A is replaced by a force $\vec{F'}$ such that $|\vec{F'}| = |\vec{F}|$ at B and having same line of action.

Clearly, $\vec{F'} = \vec{F}$

**Limitation:**

Consider a steel rod in equilibrium. Apply two forces of same magnitude but in opposite direction at A. The equilibrium condition of steel rod is not disturbed yet.

But as per principle of transmissibility, the force 'F' can be replaced at B without disturbing its line of action as shown in figure (b).

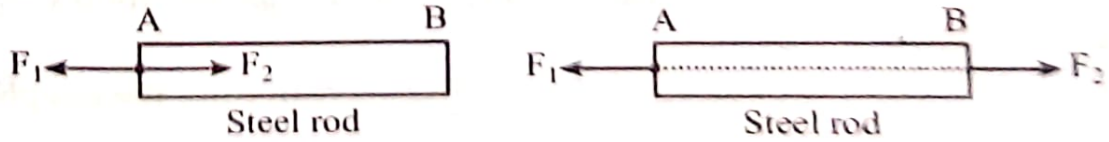


Steel rod (a) Steel rod (b)

If we observe fig. (b), the rod is in tension and will have some deflections depending upon its area, length, modulus of



Scanned with CamScanner

elasticity magnitude of force. This tensile force will result in the elongation of that steel bar which is contradiction of principle of transmissibility.

Thus, principle of transmissibility is applicable only to the rigid body in which we neglect the internal effects.

## 3.3 Moments and Couples

*Moment of force* about a point is defined as the turning tendency of a force about that point. It is given by the product of force and the perpendicular distance of the line of action of force from that point.

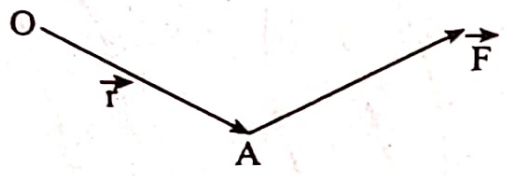


In vector form, moment of $\vec{F}$ about O is expressed as

$$\vec{M}_O = \vec{r} \times \vec{F}$$

where $\vec{r}$ = position vector of A w.r.t. O

A system formed by two parallel forces equal in magnitude but opposite in direction separated by a finite distance is known as *couple*.

Moment of couple = F × d

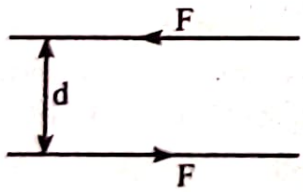


**Characteristics of couple:**

A couple (whether clockwise or anticlockwise) has the following characteristics:

1. The algebraic sum of the forces, constituting the couple is zero.
2. Th algebraic sum of the moments of the forces, constituting the couple, about any point is the same, and equal to the moment of the couple itself.



Scanned with CamScanner

3. A couple cannot be balanced by a single force, but can be balanced only by a couple, but of opposite sense.

4. Any number of coplanar couples can be reduced to a single couple, whose magnitude will be equal to the algebraic sum of the moments of all the couples.

**Couple is a Free Vector**

**Proof:**

To show couple is a free vector, we have to show moment of couple about any point will be same.

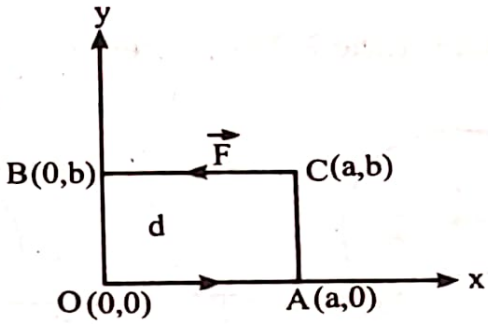


Consider a couple as shown in figure acting on a xy-plane. The couple is acting on a rectangular element of length a and breadth b.

Taking moment about O,

$$\vec{M}_O = \vec{r}_{OB} \times (-F\hat{i}) \qquad (\text{Note: } \vec{r}_{AB} = \vec{r}_{OB} - \vec{r}_{OA})$$

$$= \{(0,b) - (0,0)\} \times (-F\hat{i})$$

$$= +b\hat{j} \times -F\hat{i} = bF\hat{k}$$

Taking moment about A,

$$\vec{M}_A = \vec{r}_{AC} \times \vec{F}$$

$$= \{(a,b) - (a,0)\} \times (-F\hat{i})$$

$$= (a\hat{i} - b\hat{j}) \times (-F\hat{i}) = bF\hat{k}$$

Taking moment about B,

$$\vec{M}_B = \vec{r}_{BO} \times F\hat{i}$$

$$= \{(0,0) - (0,b)\} \times F\hat{i}$$

$$= -b\hat{j} \times F\hat{i} = bF\hat{k}$$

Since $M_O = M_A = M_B$, it is proved that couple is a free vector.



Scanned with CamScanner

## 3.4 Resolution of a Force into Force and a Couple

Any force $\vec{F}$ acting on a rigid body can be moved to an arbitrary point O provided that a couple is added whose moment is equal to the moment of $\vec{F}$ about O. Let a force $\vec{F}$ acts at point A on the body as shown in figure below. If it is desired to transfer it to point B, we replace equal and opposite force $\vec{F}$ at point B. The second equivalent system can be viewed as force $\vec{F}$ acting at B and couple $\vec{C}$ whose magnitude is Fxd, where d = distance between A and B.

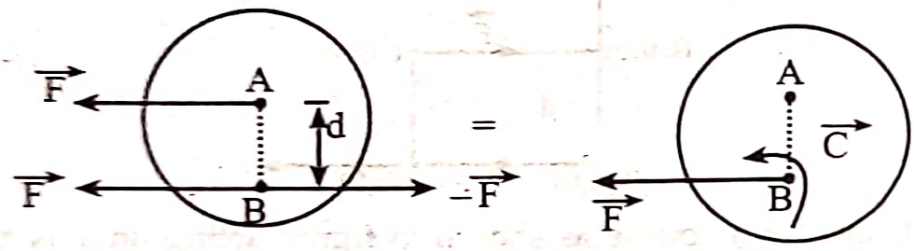


This couple $\vec{C}$ and $\vec{F}$ are perpendicular to each other

$$|\vec{C}| = F \times d$$

$$\vec{C} = \vec{r}_{BA} \times \vec{F}$$

## 3.5 Varignon's Theorem

*Varignon's theorem* states that moment of a resultant of two forces about a point lying in the plane of the forces is equal to the algebraic sum of moments of these forces about the same point.

Consider two concurrent forces P and Q as shown. Let O be the point about which moment is to be calculated. Through O, draw a line parallel to the direction of force P which meets the line of action of force Q at C. Let R be the resultant of two forces P and Q.

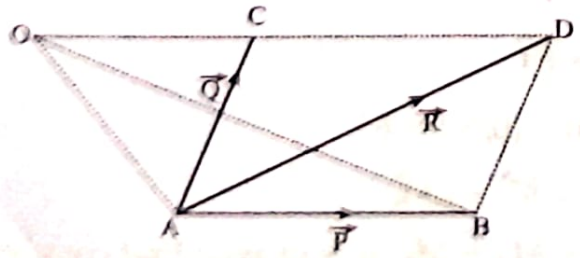




Scanned with CamScanner

Moment of force P about O ($M_P$) = $2 \times \Delta AOB$

Moment of force Q about O ($M_Q$) = $2 \times \Delta AOC$

Moment of force P about O ($M_R$) = $2 \times \Delta AOD$

From figure,

$\Delta AOD = \Delta AOC + \Delta ACD$

or, $\Delta AOD = \Delta AOC + \Delta ABD$

or, $\Delta AOD = \Delta AOC + \Delta AOB$

or, $2 \times \Delta AOD = 2 \times \Delta AOC + 2 \times \Delta AOB$

$\therefore M_R = M_Q + M_P$

This principle can be extended for number of forces i.e., moment of resultant of a number of forces about a point lying in the plane of forces is equal to the algebraic sum of moments of these forces about the same point.

$$\vec{r} \times (\vec{F_1} + \vec{F_2} + \vec{F_3} + \ldots\ldots) = \vec{r} \times \vec{F_1} + \vec{r} \times \vec{F_2} + \vec{r} \times \vec{F_3} + \ldots\ldots$$

$$\therefore \vec{r} \times \vec{F} = \vec{r} \times \vec{F_1} + \vec{r} \times \vec{F_2} + \vec{r} \times \vec{F_3} + \ldots\ldots$$

## 3.6 Lami's Theorem

*Lami's theorem* states that if a body is in equilibrium under the action of three forces, then, each force is proportional to the sine of the angle between the other two forces.

Mathematically,

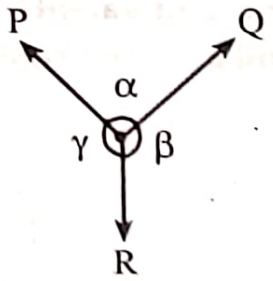


$$\frac{P}{\sin\beta} = \frac{Q}{\sin\gamma} = \frac{R}{\sin\alpha}$$

All the forces must be outgoing from a common point.

**Proof:**

Let P, Q, R be the three concurrent forces in equilibrium as shown in figure.



Scanned with CamScanner

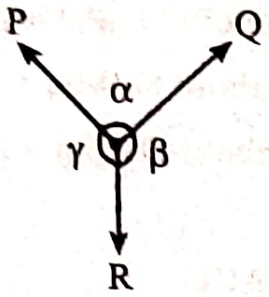


Forming a triangle with these forces,

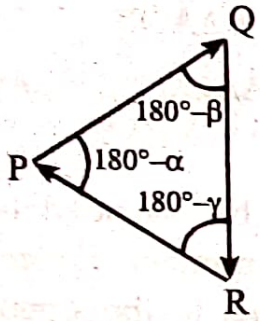


Using sine law,

$$\frac{P}{\sin(180°-\beta)} = \frac{Q}{\sin(180°-\gamma)} = \frac{R}{\sin(180°-\alpha)}$$

$$\therefore \frac{P}{\sin\beta} = \frac{Q}{\sin\gamma} = \frac{R}{\sin\alpha} \text{ proved.}$$

## SOLUTION TO IMPORTANT QUESTIONS

**1. A 160 N force P is applied at point A of a structural member. Replace P with (a) an equivalent force couple system at C (b) an equivalent system consisting of a vertical force at B and a second force at D.**

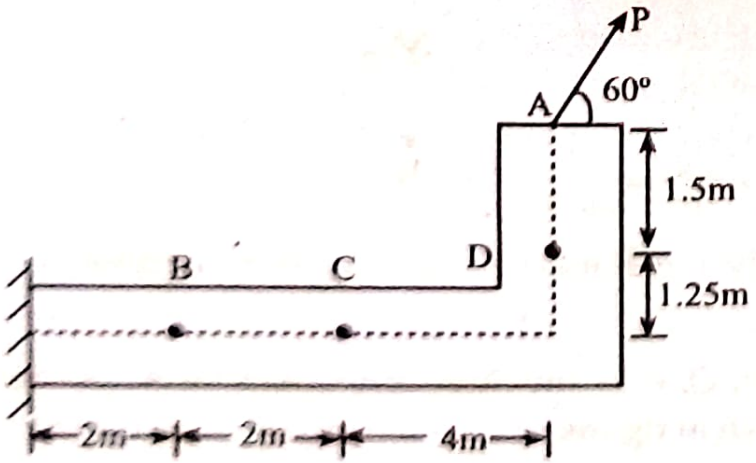




Scanned with CamScanner

**Solution:**

a) Equivalent force at C = $\vec{P}$ = 160 N ∠60°

Equivalent couple is moment of this force P about C and is calculated as

$M_C = -P\cos60° \times (1.5 + 1.25) + P\sin60° \times 4$

$= -160\cos60° \times 2.75 + 160\sin60° \times 4 = 334.25$ Nm

b) Let $F_B$ be the vertical force at B and $F_D$ be the force at D at an angle θ with x-axis.

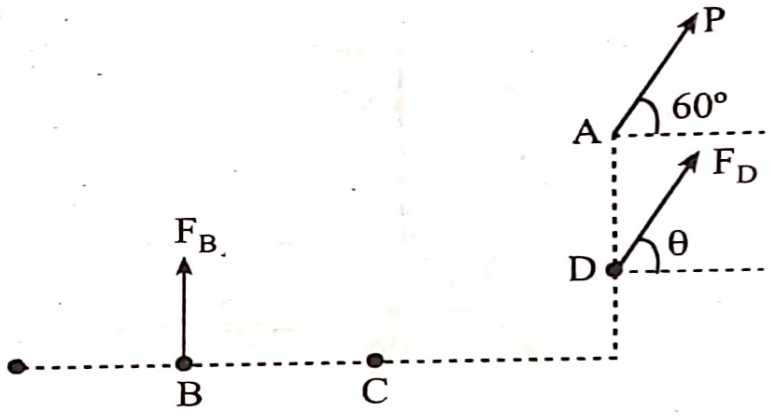


Using Varignon's theorem,

Moment of P about D = Moment of $F_B$ about D + moment of $F_D$ about D

or, $P\cos60° \times 1.5 = F_B \times 6 + 0$

or, $160\cos60° \times 1.5 = F_B \times 6 + 0$

∴ $F_B = 20$ N (↑)

Equating vertical component,

$P\sin60° = F_B + F_D\sin\theta$

or, $160\sin60° = 20 + F_D\sin\theta$

or, $F_D\sin\theta = 118.56$ ..... (i)

Equating horizontal component,

$P\cos60° = F_D\cos\theta$

or, $160\cos60° = F_D\cos\theta$

or, $F_D\cos\theta = 80$ ..... (ii)

From equations (i) and (ii),

$\tan\theta = 1.482$



Scanned with CamScanner

or, $\theta = 56°$

From equation (ii),

$F_D \cos 56° = 80$

$\therefore \quad F_D = 143.03$ N

**2. Replace the two wrenches as shown in figure by a single equivalent wrench and determine:**

**a. The resultant force**

**b. Indicate its line of action.**

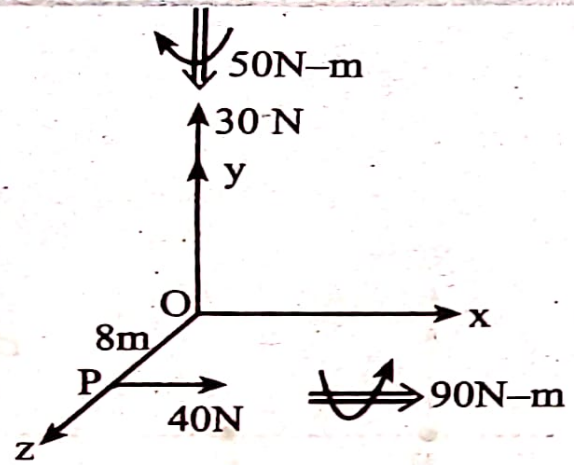


**Solution:**

a. First of all reducing the given system of wrench into force-couple system at O.

This force-couple system consists of a force $\vec{R}$ and couple vector $\vec{M}_O^R$ defined as follows:

$\vec{R} = \sum \vec{F}$ and, $\vec{M}_O^R = \sum (\vec{r} \times \vec{F})$

Computations are arranged in tabular form.

| $\vec{r}$ (m) | $\vec{F}$ (N) | $\vec{r} \times \vec{F}$ (N–m) |
|---|---|---|
| 0 | $30\hat{j}$ | 0 |
| $8\hat{k}$ | $40\hat{i}$ | $320\hat{j}$ |

$\vec{C}_1 = 90\hat{i}$, $\vec{C}_2 = -50\hat{j}$

$\vec{R} = 40\hat{i} + 30\hat{j}$

$\vec{M}_O^R = \vec{M}_{due\ to\ 40N} + \vec{C}_1 + \vec{C}_2 = 320\hat{j} + 90\hat{i} - 50\hat{j} = 90\hat{i} + 270\hat{j}$



Scanned with CamScanner

Magnitude of $\vec{R}$ is

$$|\vec{R}| = R = \sqrt{40^2 + 30^2} = 50 \text{ N}$$

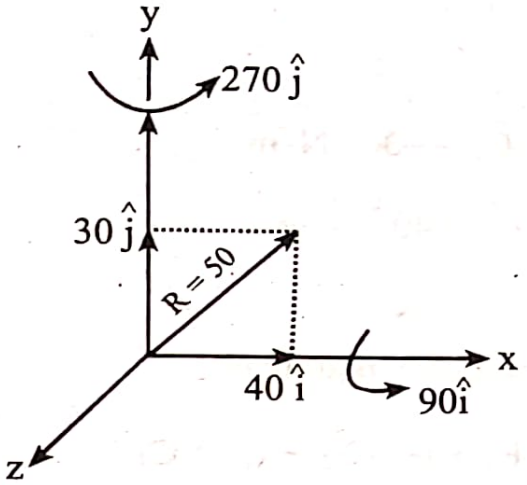


For calculation of wrench,

$$\text{Pitch of wrench (P)} = \frac{\vec{R}\,.\,\vec{M}_o^R}{R^2}$$

$$= \frac{(40\,\hat{i} + 30\,\hat{j}).(90\hat{i} + 270\hat{j})}{50^2}$$

$$= \frac{3600 + 8100}{2500} = 4.68$$

Resolving $\vec{M}_o^R$ in direction of resultant force $\vec{R}$

$$\vec{M}_1 = 4.68\,(40\hat{i} + 30\hat{j}) = 187.2\hat{i} + 140.4\hat{j}$$

and, $\vec{R} = 40\hat{i} + 30\hat{j}$ is new wrench.

**3. Obtain the resultant of the two pairs of wrench shown in the figure. Indicate its line of action.**

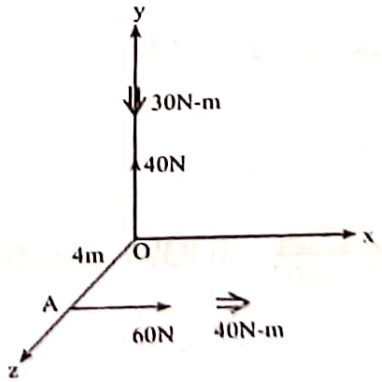




Scanned with CamScanner

**Solution:**

Resultant of two pairs of wrench and its line of action:

Resultant force at O is

$$\vec{F_R} = \vec{F_1} + \vec{F_2}$$

$$\vec{F_1} = 40\hat{j}\text{ N}, \vec{C_1} = -30\hat{j}\text{ N-m}$$

$$\vec{F_2} = 60\hat{i}\text{ N}, \vec{C_2} = 40\hat{i}\text{ N-m}$$

$$\therefore \vec{F_R} = 60\hat{i} + 40\hat{j}\text{ N}$$

Resultant moment about O is

$$\vec{M_O} = \vec{r_1} \times \vec{F_1} + \vec{r_2} \times \vec{F_2} + \vec{C_1} + \vec{C_2}$$

$$= 0 + 4\hat{k} \times 60\hat{i} - 30\hat{j} + 40\hat{i}$$

$$= 240\hat{j} - 30\hat{j} + 40\hat{i} = 40\hat{i} + 210\hat{j}\text{ N-m}$$

Now, pair of wrenches can be replaced by a system of forces i.e., $\vec{F_R}$ and $\vec{M_O}$ at point O.

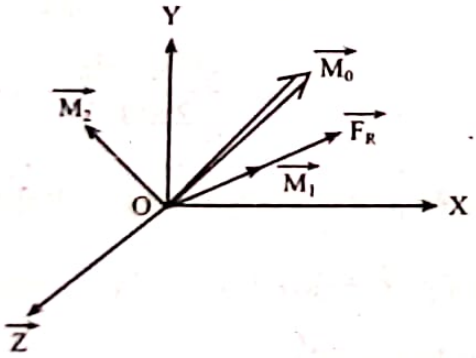


Direction of $\vec{M_O}$ and $\vec{F_R}$ are different and hence, this system is not wrench.

So, resolve $\vec{M_O}$ along $\vec{F_R}$ as $\vec{M_1}$

$$\therefore M_1 = \vec{M_O}\,\hat{f}$$

$$\hat{f} = \frac{\vec{F_R}}{|\vec{F_R}|} = \frac{60\hat{i} + 40\hat{j}}{\sqrt{60^2 + 40^2}} = 0.832\hat{i} + 0.554\hat{j}$$



Scanned with CamScanner

$$M_1 = (40\hat{i} + 210\hat{j}).(0.832\hat{i} + 0.554\hat{j})$$
$$= 33.28 + 116.34 = 144.62 \text{ N-m}$$

$$\vec{M_1} = M_1\hat{f}$$
$$= 149.62(0.832\hat{i} + 0.554\hat{j}) = 124.48\hat{i} + 82.9\hat{j} \text{ N-m}$$

Component of moment perpendicular to $\vec{F_R}$ is

$$\vec{M_2} = \vec{M_O} - \vec{M_1} = 40\hat{i} + 210\hat{j} - (124.48\hat{i} + 82.9\hat{j})$$
$$= -84.48\hat{k} + 127.1\hat{j} \text{ N-m}$$

Now, replacing $\vec{F_R}$ to new point P(x, y, z) from O so that it can cancel $\vec{M_2}$.

$$\vec{OP} \times \vec{F_R} = \vec{M_2}$$

or, $(x\hat{i} + y\hat{j} + z\hat{k}) \times (60\hat{i} + 40\hat{j}) = 84.48\hat{i} + 127.1\hat{j}$

or, $40x\hat{k} - 60y\hat{k} + 60z\hat{j} - 40z\hat{i} = -84.48\hat{i} + 127.1\hat{j}$

Equating coefficients of like vectors:

For $\hat{i}$,

$-40z = -84.48$

$\therefore z = 2.112$ m

For $\hat{k}$, $40x - 60y = 0$

Force also passes through x = 0, y = 0. So, after cancelling $\vec{M_2}$; $\vec{M_1}$ and $\vec{F_R}$ make wrench at point P along z-axis at P(0, 0, 2.112 m).

**4. If two forces of same magnitude 25 KN act at points A and B as shown in figure and force at A passes through C and force at B passes through D, (a) find equivalent force couple system at 'O' (b) find equivalent wrench, give pitch and axis of wrench.**



Scanned with CamScanner

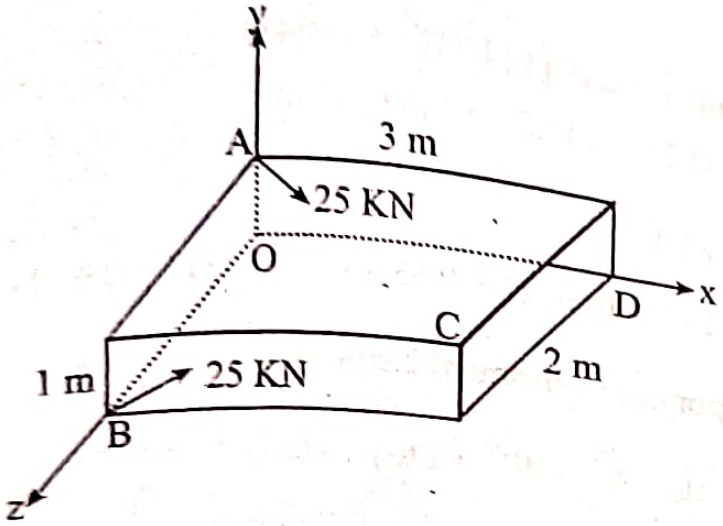


**Solution:**

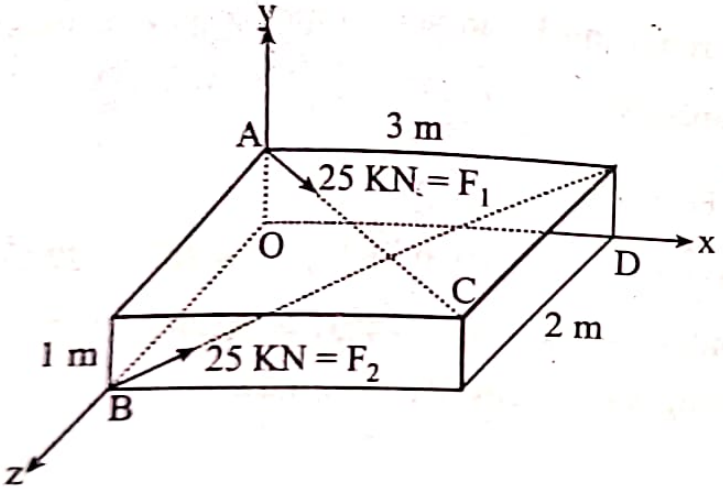


Coordinate of O = O(0, 0, 0); coordinate of A = A(0, 1, 0)

coordinate of B = B(0, 0, 2); coordinate of C = C(3, 1, 2)

coordinate of D = D(3, 0, 0)

Direction of $F_1$ is along $\hat{f}_{AC}$

$$\vec{F_1} = F_1 \hat{f}_{AC}$$

$$\hat{f}_{AC} = \frac{\vec{AC}}{|\vec{AC}|} = \frac{(3-0)\hat{i} + (1-1)\hat{j} + (2-0)\hat{k}}{\sqrt{3^2 + 2^2}} = 0.832\hat{i} + 0.554\hat{k}$$

$$\therefore \vec{F_1} = 25(0.832\hat{i} + 0.554\hat{k}) = 20.8\hat{i} + 13.87\hat{k} \text{ KN}$$

Similarly, $\vec{F_2} = F_2 \hat{f}_{BD} = 25 \dfrac{\vec{BD}}{|\vec{BD}|}$



Scanned with CamScanner

$$= 25\frac{\{(3-0)\hat{i} + (0-2)\hat{k}\}}{\sqrt{3^2+2^2}}$$

$$= 25(0.832\hat{i} - 0.554\hat{k}) = 20.8\hat{i} - 13.87\hat{k} \text{ KN}$$

Resultant force at O, $\vec{F_R} = \vec{F_1} + \vec{F_2}$

$$= 20.8\hat{i} + 13.87\hat{k} + 20.8\hat{i} - 13.87\hat{k}$$

$$= 41.6\hat{i} \text{ KN}$$

Moment about O, $\vec{M_O} = \vec{r_1} \times \vec{F_1} + \vec{r_2} \times \vec{F_2}$

$\vec{r_1} = \vec{OA} = \hat{j}$, $\vec{r_2} = \vec{OB} = 2\hat{k}$

$$\vec{M_O} = \hat{j} \times (20.8\hat{i} + 13.87\hat{k}) + 2\hat{k}(20.8\hat{i} - 13.87\hat{k})$$

$$= -20.8\hat{k} + 13.87\hat{i} + 41.6\hat{j} + 0$$

$$= 13.87\hat{i} + 41.6\hat{j} - 20.8\hat{k} \text{ KN-m}$$

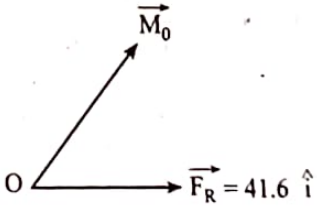


To make wrench, $\vec{M_O}$ is resolved along $\vec{F_R}$ and perpendicular to $\vec{F_R}$.

Resolve $\vec{M_R}$ along $\vec{F_R}$ i.e., $\vec{M_1}$, $M_1 = \vec{M_1}.\hat{f}$

$\hat{f}$ = unit vector along $\vec{F_R} = \hat{i}$

$$M_1 = \vec{M_O}.\hat{i} = (13.87\hat{i} + 41.6\hat{j} - 20.8\hat{k}).\hat{i} = 13.87 \text{ KN-m}$$

$$\therefore \vec{M_1} = 13.87\hat{i} \text{ KN-m}$$

$\vec{M_2}$ is moment along perpendicular direction of $\vec{F_R}$ which is given as

$$\vec{M_2} = \vec{M_O} - \vec{M_1}$$

$$= (13.87\hat{i} + 41.6\hat{j} - 20.8\hat{k}) - 13.87\hat{i} = 41.6\hat{j} - 20.8\hat{k} \text{ KN-m}$$



Scanned with CamScanner

Cancel $\vec{M_2}$ by replacing $\vec{F_R}$ from O to point P(x, y, z). Now,

$\vec{OP} \times \vec{F_R} = \vec{M_2}$

or, $(x\hat{i} + y\hat{j} + z\hat{k}) \times 41.6\hat{i} = 41.6\hat{j} - 20.8\hat{k}$

or, $-41.6y\hat{k} + 41.6z\hat{j} = 41.6\hat{j} - 20.8\hat{k}$

Equating coefficients of like vectors:

For $\hat{j}$,

$41.6z = 41.6 \Rightarrow z = 1$ m

For $\hat{k}$,

$-41.6y = -20.8$

$\therefore y = 0.5$ m

Point P is P(0, 0.5, 1).

$$\text{Pitch of wrench (P)} = \frac{\vec{F_R}.\vec{M_O}}{F_R^2}$$

$$= \frac{(41.6\hat{i}).(13.87\hat{i} + 41.6\hat{j} - 20.8\hat{k})}{41.6^2}$$

$$= \frac{865.28}{41.6^2} = 0.5$$

Thus, $\vec{M_1} = 13.87\hat{i}$ and $\vec{F_R}$ at point P(0, 0.5, 1) = $41.6\hat{i}$ makes the wrench whose axis is along x-axis.

**5. Determine magnitude, direction, and line of action of the resultant of forces acting in the system shown in figure below.**

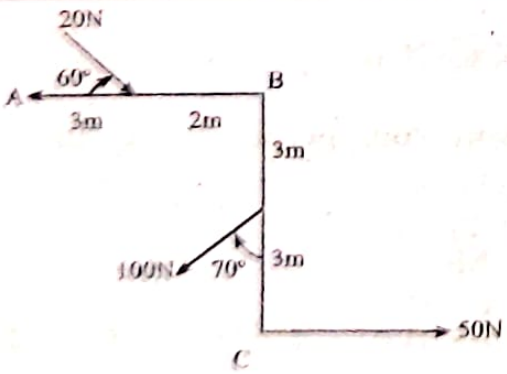




Scanned with CamScanner

**Solution:**

Let A be the origin. Resolving all the forces in x and y direction respectively, we get

Taking $(\overset{+}{\rightarrow})$,

$$\vec{F_x} = 20\cos 20°\hat{i} - 100\cos 20°\hat{i} + 50\hat{i}$$

$$= -33.9\hat{i}$$

Taking $(+\uparrow)$,

$$\vec{F_y} = -20\sin 60°\hat{j} - 100\cos 70°\hat{j}$$

$$= -51.52\hat{j}$$

Resultant of force in the system is

$$\vec{R} = \vec{F_x} + \vec{F_y}$$

$$= -33.9\hat{i} - 51.52\hat{j}$$

Magnitude of resultant is

$$|\vec{R}| = \sqrt{(-33.9)^2+(-51.52)^2} = 61.61 \text{ N}$$

Direction of resultant force is

$$\tan\theta = \frac{F_y}{F_x} = \frac{51.52}{33.97}$$

$$\therefore \theta = \tan^{-1}\left(\frac{51.52}{33.97}\right) = 56.6°$$

**6. Three vertical wires as shown in figure support a plate of 50 kg. Determine the tension in each wire. All dimensions are in mm.**

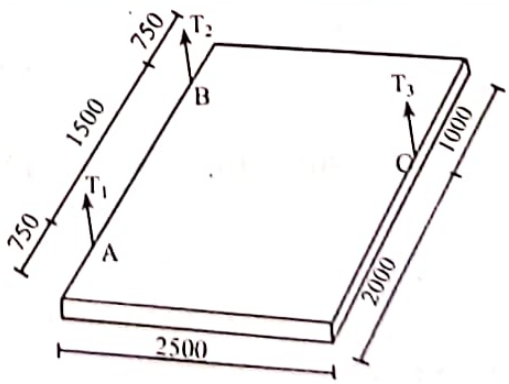




Scanned with CamScanner

**Solution:**

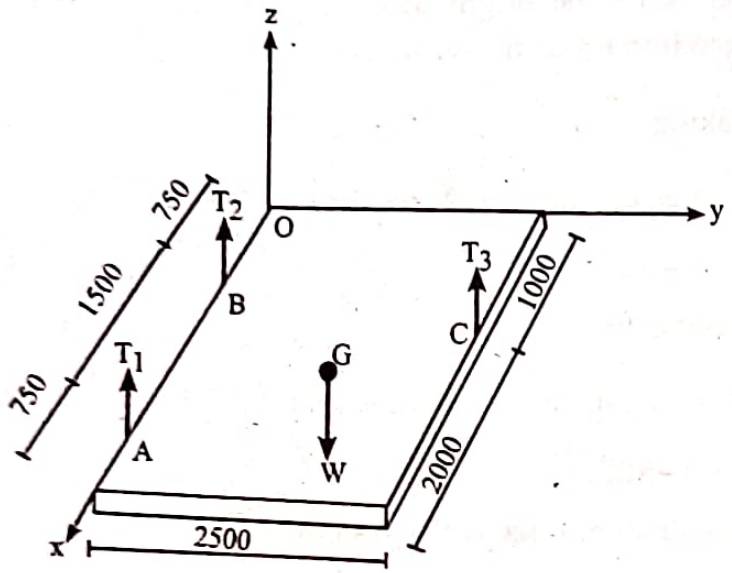


Co-ordinates of A, B, C with respect to origin O are A (2250, 0, 0), B (750, 0, 0) and C(1000, 2500, 0). Co-ordinate of G (1500, 12500).

Since the plate is an equilibrium,

$(+\uparrow)\ \Sigma F_y = 0$

or, $T_1 + T_2 + T_3 = 50$ kg.....(i)

At origin, $(\circlearrowleft)\Sigma M = 0$

or, $2250\hat{i} \times T_1\hat{k} + 750\hat{i} \times T_2\hat{k} - (1500\hat{i} + 1250\hat{j}) \times N\hat{k} + (1000\hat{i} + 12500\hat{j}) \times T_3\hat{k} = 0$

Once again rewriting,

$2250\hat{i} \times T_1\hat{k} + 750\hat{i} \times T_2\hat{k} + (1500\hat{i} + 1250\hat{j}) \times (-W\hat{k}) + (1000\hat{i} + 2500\hat{j}) \times T_3\hat{k} = 0$

On reducing it,

$(-2250T_1 - 750T_2 + 1500W - 1000T_3)\ \hat{j} + (-1250W + 2500T_2)\ \hat{i} = 0\hat{i} + 0\hat{j}$

Equating coefficient of like components of vectors,

$-1250W + 2500\ T_3 = 0$



Scanned with CamScanner

$$\therefore T_3 = \frac{1250}{2500} W = \frac{50}{2} = 25 \text{ kg}$$

Similarly,

$-2250\ T_1 - 750\ T_2 + 1500\ W - 1000\ T_3 = 0$

or, $2250T_1 + 750T_2 = 1500 \times 50 - 1000 \times 25$

or, $2250T_1 + 750T_2 = 50{,}000$.....(ii)

Solving equations (i) and (ii), we get

$T_1 = 20.83$ kg , $T_2 = 4.17$ kg

**7. Force $\vec{F} = (3\hat{i} - 6\hat{j} + 4\hat{k})$ N passes through the point (6, 3, 2) m. Release this force with an equivalent system where the force $\vec{F}$ passes through the point (2, 5, 10) m.**

**Solution:**

When the force $\vec{F}$ is replaced to some other point, couple is additionally developed.

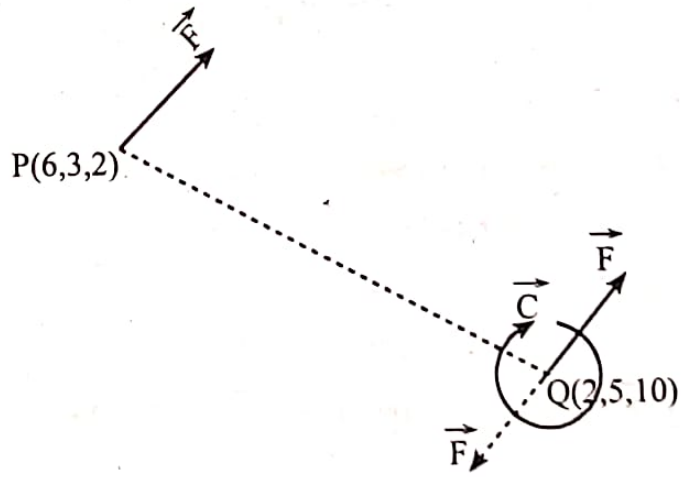


This couple thus formed is given by

$\vec{C} = \vec{r}_{QP} \times \vec{F}$

$= (\overrightarrow{OP} - \overrightarrow{OQ}) \times \vec{F}$

$= \{(6,3,2) - (2,5,10)\} \times (3, -6, 4)$

$= (4,-2,-8) \times (3,-6,4)$



Scanned with CamScanner

$$= \begin{vmatrix} \hat{i} & \hat{j} & \hat{k} \\ 4 & -2 & -8 \\ 3 & -6 & 4 \end{vmatrix}$$

$$= \hat{i}\,(-8-48) - \hat{j}\,(16+24) + \hat{k}\,(-24+6)$$

$$= -56\hat{i} - 40\hat{j} - 18\hat{k}$$

**8. Determine the resultant of the forces acting tangentially to a circle of radius 3m as shown in figure. What will be the location of the resultant with respect to the centre of the circle?**

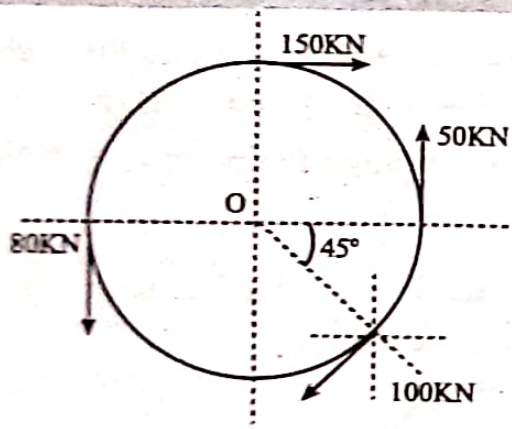


**Solution:**

$$(\overset{+}{\rightarrow})\ \Sigma F_x = 150 - 100\cos 45^\circ$$

$$= 79.29 \text{ KN } (\rightarrow)$$

$$(+\uparrow)\ \Sigma F_y = 50 - 80 - 100\sin 45^\circ$$

$$= -100.71 \text{ N} = 100.71 \text{ N } (\downarrow)$$

$$R = \sqrt{\Sigma F_x^2 + \Sigma F_y^2} = \sqrt{100.71^2 + 79.29^2} = 128.18\text{KN}$$

$$\theta = \tan^{-1}\left(\frac{\Sigma F_y}{\Sigma F_x}\right) = \tan^{-1}\left(\frac{100.71}{79.29}\right) = 51.786^\circ$$

(clockwise with horizontal direction).

$\therefore R = 128.18\text{KN}\ (51.786^\circ)$

To find position,

$(\circlearrowleft)\ \Sigma M_O = 0$

or, $+150\times3 - 50\times3 - 80\times3 + 100\times3 = R\sin 51.786^\circ \times x = 0$



Scanned with CamScanner

or, 360 = 128.18 sin51.786°× x

∴ x = 3.57 m (right of O)

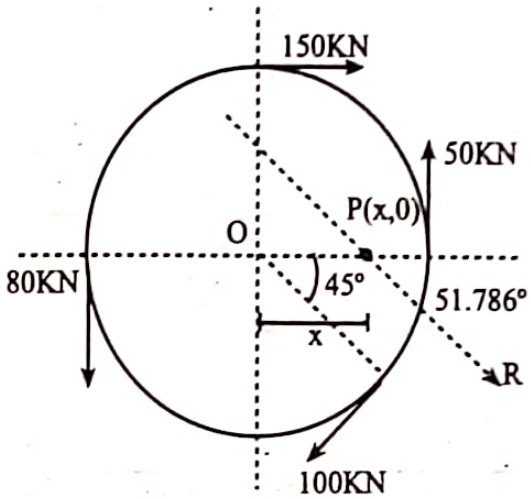


**9. Determine the magnitude, direction, and position w.r.t. center 'O' of the resultant of the forces acting on the rectangular plate ABCD as shown in figure below.**

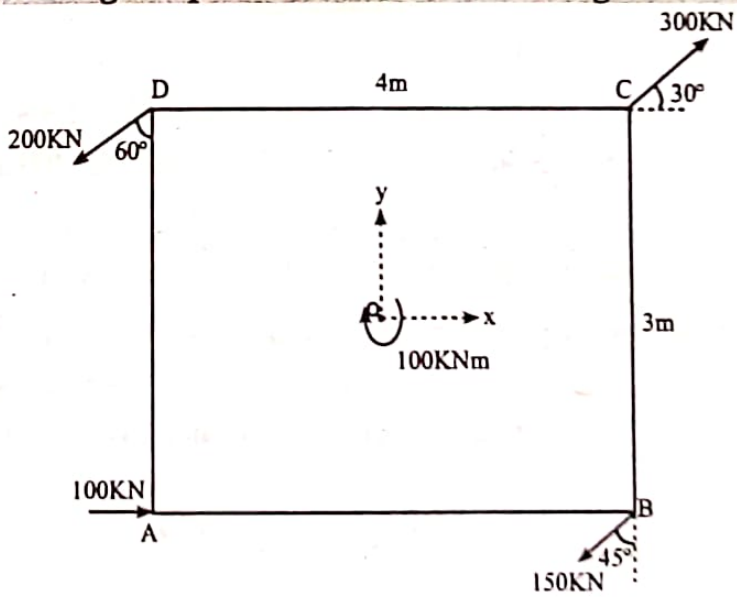


**Solution:**

At first find the sum of the all forces in horizontal and vertical direction.

$(\overset{+}{\rightarrow})\ \Sigma F_x = 300\cos30^\circ - 200\sin60^\circ + 100 - 150\sin45^\circ$

$= 80.53$ KN

$(+\uparrow)\ \Sigma F_y = 300\sin30^\circ - 200\cos60^\circ - 150\cos45^\circ$

$= -56.07$ KN



Scanned with CamScanner

Since $\Sigma F_x$ is +ve and $\Sigma F_y$ is –ve, the resultant lies in fourth quadrant.

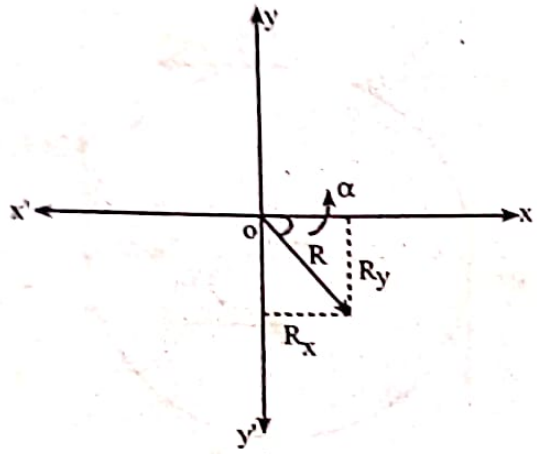


$$\therefore R = \sqrt{\Sigma F_x^2 + \Sigma F_y^2} = \sqrt{30.53^2 + (-56.07)^2} = 98.12 \text{ KN}$$

$$\alpha = \tan^{-1}\left(\frac{\Sigma F_y}{\Sigma F_x}\right) = \tan^{-1}\left(\frac{-56.07}{80.53}\right) = 34.84^\circ$$

To find the position of resultant force, we calculate moment about point (say O for now).

$$(\circlearrowleft)\Sigma M_O = 100 + 150\cos45^\circ\times1.5 + 150\sin45^\circ\times2 - 300\sin30^\circ\times2 + 300\cos30^\circ\times1.5 - 100\times1.5 - 200\cos60^\circ\times2 - 200\sin60^\circ\times1.5$$

$$= -48.86 \text{ KNm} = 48.86 \text{ KNm (anticlockwise)}$$

So, all the forces produce an anticlockwise moment of 48.86 KNm. Thus, we get an idea that resultant R should lie such that it produces an anticlockwise moment of 48.86 KNm about O.

For this to happen, R should lie to the left of O.

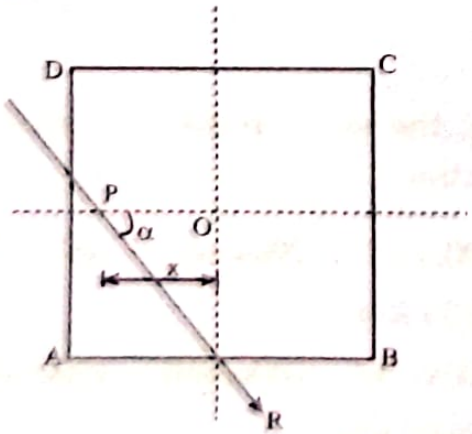




Scanned with CamScanner

Moment of R about O = R sin34.84° × x

or, $\frac{48.86}{98.12\sin 34.84°} = x$

or, x = 0.87 m = OP

OM = OP tanα= 0.87 tan 34.84° = 0.606 m

Thus, the resultant cuts EF 0.87 m left and GH 0.606 m below O at an angle of α = 34.84° with horizontal.

**10. Determine the magnitude, direction, and position of the resultant of the system of forces with respect to point A as shown in figure below.**

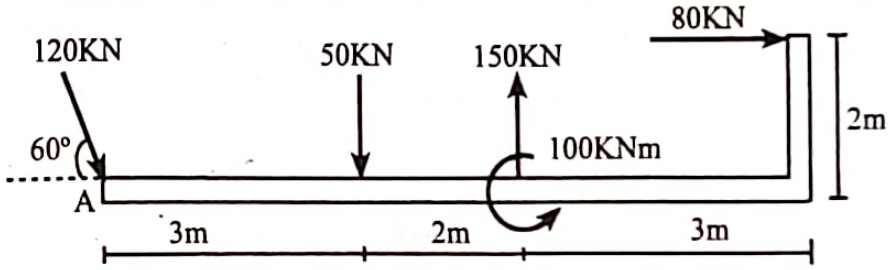


**Solution:**

On finding the sum of all forces in horizontal and vertical direction, we get

$(\overset{+}{\rightarrow})\ \Sigma F_x = 80 + 120\cos 60°$

$= 80 + 60 = 140KN\ (\rightarrow)$

$(+\uparrow)\ \Sigma F_y = 150 - 50 - 120\sin 60°$

$= -3.923\ KN = 3.923KN(\downarrow)$

Since $\Sigma F_x$ is +ve , $\Sigma F_y$ is –ve, the resultant lies in 4th quadrant.

$$R = \sqrt{\Sigma F_x^2 + \Sigma F_y^2} = \sqrt{140^2 + (-3.923)^2} = 140.05\ KN$$

$$\alpha = \tan^{-1}\left(\frac{3.923}{140}\right) = 1.6°$$

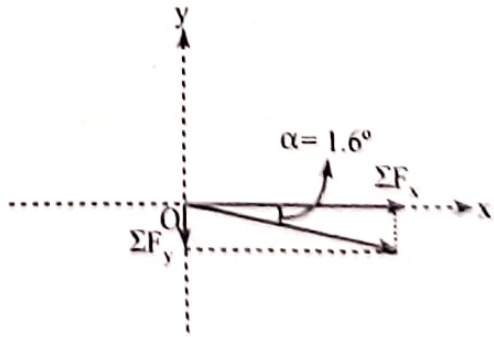




Scanned with CamScanner

To find position, we have to calculate moment about A.

$$\circlearrowleft \Sigma M_A = 50 \times 3 - 150 \times 5 - 100 + 80 \times 2$$

$$= -540 \text{ KNm} = 540 \text{ KNm (anticlockwise)}$$

This means the resultant should lie such that it produces anticlockwise moment of 540 KNm about A. For this, R should lie to the left of A.

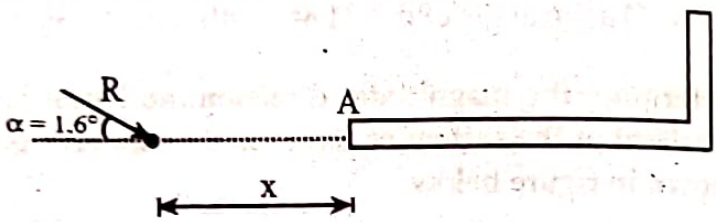


Let R acts at a distance x from A. Then,

Moment of R about A = (Rsinα) × x

or, 540 = Rsin1.6° × x

$$\text{or, } x = \frac{540}{140.05\sin 1.6^\circ} = 138.09\text{m}$$

Thus, the resultant force should act far away i.e., 138.09m at an angle α = 1.6° with horizontal, left of A.

**11. Find the magnitude, direction, and position of resultant force of the following system as shown in figure.**

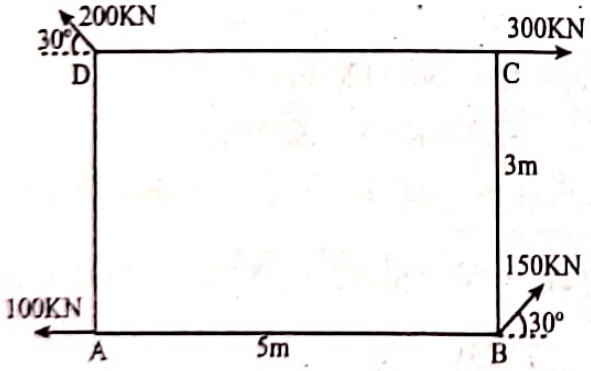


**Solution:**

On finding the sum of all forces in horizontal and vertical direction, we get

$$(\overset{+}{\rightarrow}) \Sigma F_x = 300 + 150\cos 30^\circ - 100 - 200\cos 30^\circ$$

$$= 156.7 \text{ KN}$$

$$(\uparrow +) \Sigma F_y = 150\sin 30^\circ + 200\sin 30^\circ$$

$$= 175 \text{ KN}$$



Scanned with CamScanner

Since $\Sigma F_x$ and $\Sigma F_y$ both are positive, the resultant lies in the first quadrant.

$$R = \sqrt{(\Sigma F_x)^2 + (\Sigma F_y)^2} = \sqrt{(156.7)^2 + (175)^2} = 234.90 \text{ KN}$$

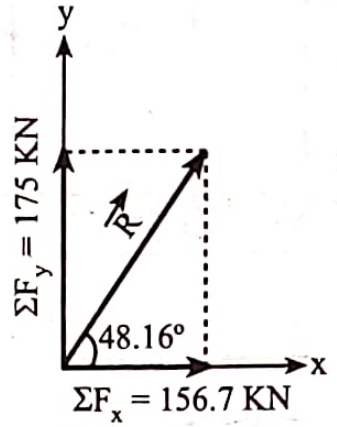


If $\alpha$ is the angle made by resultant with x-direction, then

$$\tan\alpha = \frac{\Sigma F_y}{\Sigma F_x} \Rightarrow \alpha = \tan^{-1}\left(\frac{175}{156.7}\right) = 48.16^\circ$$

To find the position of resultant force, we have to calculate moment about any point (say A for now).

$$\circlearrowleft^{+}\ \Sigma M_A = -200\cos 30^\circ \times 3 + 300 \times 3 - 150\sin 30^\circ \times 5$$

$$= 5.385 \text{ KNm}$$

So, all the forces produce a moment of 5.385 KNm clockwise. Thus, we get an idea that the resultant R should lie such that it produces clockwise moment of 5.385KNm about point A. For this to happen, R should lie to the left of A.

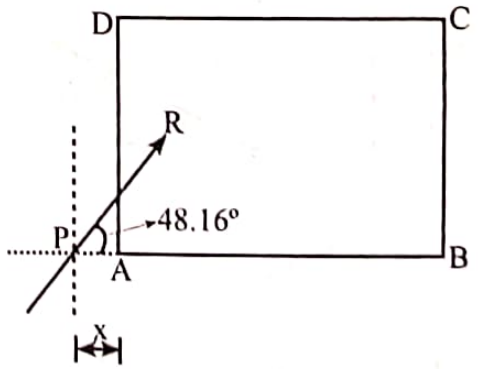


Moment of R about A = R sin(48.16°) × x

or, 5.385 = 234.90 sin(48.16°) × x

or, x = 0.030m = 3 cm (left of A)



Scanned with CamScanner

**12. Find the magnitude, direction of resultant force and locate two points on the edge of plate where the resultant meets.**

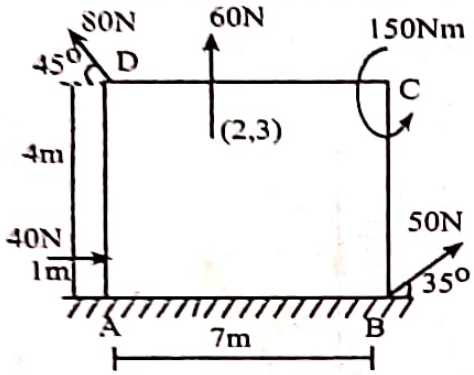


**Solution:**

Let's collect all forces at A.

$\therefore R_x = -80\cos45° + 50\cos35° + 40 = 24.4$ N

$R_y = 80\sin45° + 60 + 50\sin35° = 145.25$ N

where $R_x$ = resultant of all forces in x-direction and $R_y$ = resultant of all forces in y-direction.

$\therefore \vec{R} = R_x\hat{i} + R_y\hat{j} = 24.4\hat{i} + 145.25\hat{j}$ ; R = 147.3 N

Since $R_x$ and $R_y$ both are positive, resultant lies in first quadrant.

Total moment at A,

$$\circlearrowleft \Sigma M_A = -60\times2 - 150 - 50\sin35°\times7 + 40\times1 - 80\cos45°\times5$$

$$= -713.6 = 713.6 \text{ KNm (anticlockwise)}$$

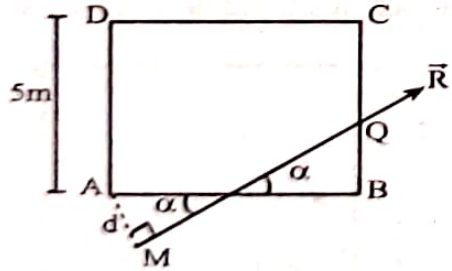


$$\alpha = \tan^{-1}\frac{R_y}{R_x} = \tan^{-1}\frac{145.24}{24.4} = 80.5°$$

The resultant R should lie such that it produces an anticlockwise moment of 713.6 KNm about A. For this, it should lie to the right of A.

$R \times d = 713.6$



Scanned with CamScanner

or, $d = \frac{713.6}{147.3} = 4.84$ m

$AP = \frac{d}{\sin\alpha} = \frac{4.84}{\sin 80.5°} = 4.91$ m and

$BQ = PB \tan\alpha = (7 - 4.91) \tan 80.5° = 12.5$ m

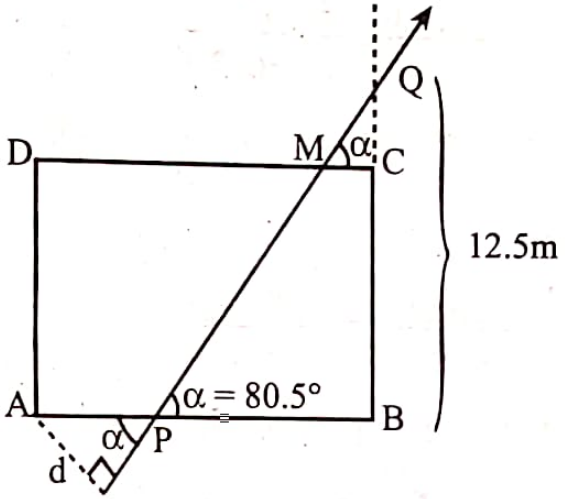


From ΔQMC and ΔQPB (using similarity property),

$MC = \frac{QC}{QB} \times PB = \frac{(12.5 - 5)}{12.5} \times (7 - 4.91) = 1.254$ m

∴ Co-ordinate of P is (4.91, 0) and M is (7–1.254, 5) i.e., (5.746, 5).

**13. Determine the resultant force and moment about point O.**

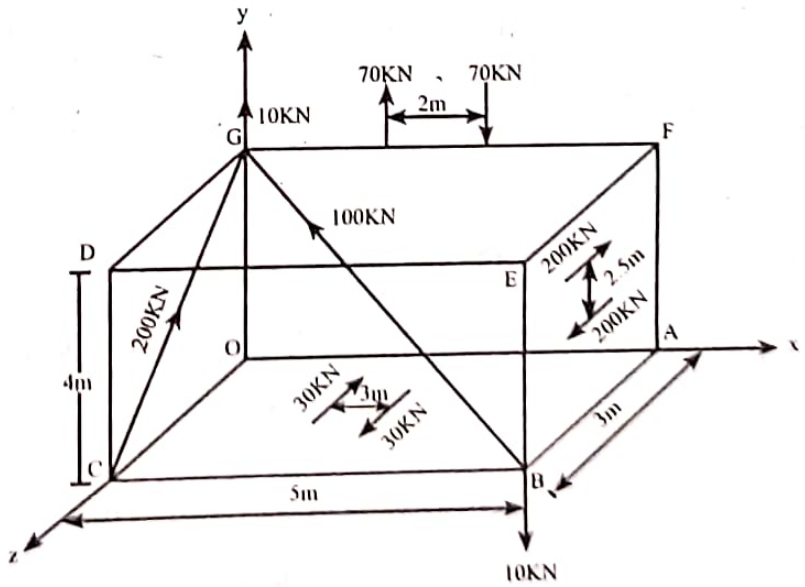




Scanned with CamScanner

**Solution:**

Co-ordinates are 0 (0,0,0), A (5,0,0), B (5,0,3), C(0,0,3), D(0,4,3), E(5,4,3), F(5,4,0), G(0,4,0).

Let's collect all the forces and the couples at O.

$\vec{F_1} = 100\,\hat{f}_{BG}$ ( $\hat{f}_{BG}$ is unit vector along BG)

$$= 100\times\left\{\frac{(0,4,0)-(5,0,3)}{\sqrt{(0-5)^2+(4-0)^2+(0-3)^2}}\right\}$$

$$= (-70.71, 56.57, -42.42) = -70.71\hat{i} + 56.57\hat{j} - 42.42\hat{k}\ \text{KN}$$

$\vec{F_2} = 200\ \hat{f}_{CG}$

$$= 200\left\{\frac{(0,0,3)-(0,4,0)}{\sqrt{(0,0)^2+(0-4)^2+(3,0)^2}}\right\}$$

$$= (0, -160, 120) = -160\hat{j} + 120\hat{k}\ \text{KN}$$

Resultant force, $\vec{F_R} = \vec{F_1} + \vec{F_2}$

$$= -70.71\hat{i} - 103.43\hat{j} + 77.58\hat{k}\ \text{KN}$$

On transferring $\vec{F_1}$ and $\vec{F_2}$ to O, couples are developed.

$\vec{C}_{\text{due to F1}} = \vec{r_{OB}} \times \vec{F_1}$

$$= (5,0,3) \times (-70.71, 56.57, -42.42)$$

$$= (-169.71, -0.03, 282.85) \approx -169.71\hat{i} + 282.85\hat{k}\ \text{KNm}$$

$\vec{C}_{\text{due to F2}} = \vec{r_{OC}} \times \vec{F_2}$

$$= (0,0,3) \times (0,-160,120)$$

$$= (480,0,0) = 480\hat{i}\ \text{KNm}$$

Couple due to 70KN, $\vec{C_1} = 2\hat{i} \times (-70\hat{j}) = -140\hat{k}$ KNm

Couple due to 10KN, $\vec{C_2} = \vec{r_{BC}} \times 10\hat{j}$

$$= \{(0,4,0) - (5,0,3)\} \times 10\hat{j}$$

$$= 30\hat{i} - 50\hat{k}\ \text{KNm}$$



Scanned with CamScanner

Couple due to 200KN, $\vec{C_3} = 2.5\hat{j} \times (-200\hat{k})$

$= -500\hat{i}$ KNm

Couple due to 30 KN, $\vec{C_4} = 3\hat{i} \times 30\hat{k}$

$= -90\hat{j}$ KNm

Total moment about point O,

$= \vec{C}_{\text{due to F1}} + \vec{C}_{\text{due to F2}} + \vec{C_1} + \vec{C_2} + \vec{C_3} + \vec{C_4}$

$= (-169.71, 0, 282.85) + (480, 0, 0) + (0, 0, -140) + (30, 0, -50) + (-500, 0, 0) + (0, -90, 0)$

$= (-159.71, -90, 92.85) = -159.71\hat{i} - 90\hat{j} + 92.85\hat{k}$ KNm

**14. Three guy wires are used in the support system for a television transmission tower that is 600 m tall. Wires A and B are tightened to a tension of 60 KN, whereas wire C has only 30 KN of tension. What is the moment of wire forces about the base of the tower? The y-axis is collinear with AO.**

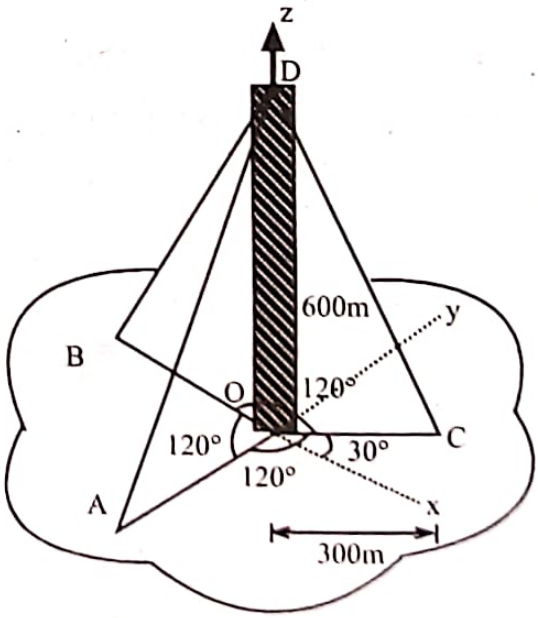




Scanned with CamScanner

**Solution:**

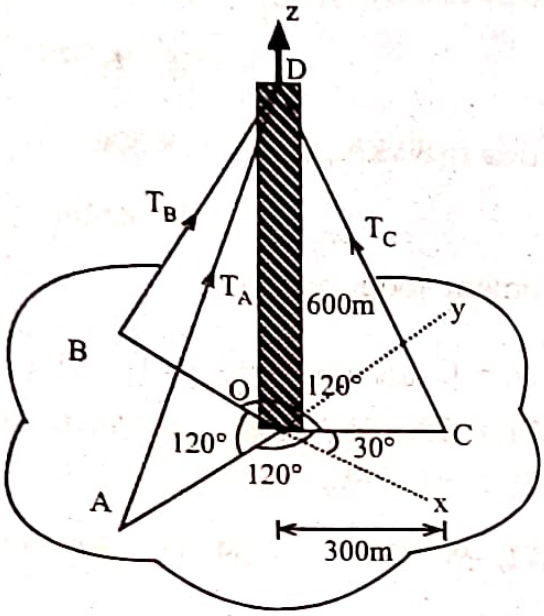


Assume OA = OC = OB = 300m

**Co-ordinates:**

O (0, 0, 0)

A (0, –300, 0)

B (–300 sin30°, 300 cos30°, 0) = (–150, 259.81, 0)

C (300 cos30°, 300 sin30°, 0) = (259.81, 150, 0)

D (0, 0, 600)

**Unit vectors:**

$$\text{Along AD, } \hat{f}_{AD} = \frac{(0, 0, 600) - (0, -300, 0)}{\sqrt{(0-0)^2 + (0-(-300)^2 + (600-0)^2)}}$$

$$= \frac{300\hat{j} + 600\hat{k}}{\sqrt{300^2 + 600^2}} = 0.45\,\hat{j} + 0.89\hat{k}$$

$$\text{Along BD, } \hat{f}_{BD} = \frac{(0, 0, 600) - (-150, 259.81, 0)}{\sqrt{(0-(-150)^2 + (0-259.81)^2 + (600-0)^2)}}$$

$$= \frac{150\hat{i} - 259.81\hat{j} + 600\hat{k}}{670.82} = 0.22\hat{i} - 0.39\hat{j} + 0.89\hat{k}$$



Scanned with CamScanner

Along CD, $\hat{f}_{CD} = \dfrac{(0, 0, 600) - (259.81, 150, 0)}{\sqrt{(0 - 259.81)^2 + (0 - 150)^2 + (600 - 0)^2}}$

$$= \frac{(-259.81, -150, 600)}{670.82} = -0.39\hat{i} - 0.22\hat{j} + 0.89\hat{k}$$

Tension along AD, $\vec{T}_{AD} = |\vec{T}_{AD}|\,\hat{f}_{AD} = 60(0.45\hat{j} + 0.89\hat{k})$

$$= 27\hat{j} + 53.4\hat{k}$$

Tension along BD, $\vec{T}_{BD} = |\vec{T}_{BD}|\,\hat{f}_{BD} = 60\,(0.22\hat{i} - 0.39\hat{j} + 0.89\hat{k})$

$$= 13.2\hat{i} - 23.4\hat{j} + 53.4\hat{k}$$

Along CD, $\vec{T}_{CD} = |\vec{T}_{CD}|\,\hat{f}_{CD} = 30\,(-0.39\hat{i} - 0.22\hat{j} + 0.89\hat{k})$

$$= -11.7\hat{i} - 6.6\hat{j} + 26.7\hat{k}$$

Position vectors of A, B and C w.r.t. O,

$\vec{r}_{OA} = -300\hat{j}$, $\vec{r}_{OB} = -150\hat{i} + 259.81\hat{j}$, $\vec{r}_{OC} = 259.81\hat{i} + 150\hat{j}$

$\Sigma\vec{M}_O = (\vec{r}_{OA} \times \vec{T}_{AD}) + (\vec{r}_{OB} \times \vec{T}_{BD}) + (\vec{r}_{OC} \times \vec{T}_{CD})$

$= (-300\hat{j}) \times (27\hat{j} + 53.4\hat{k}) + (-150\hat{i} + 259.81\hat{j}) \times (13.2\hat{i} - 23.4\hat{j} + 53.4\hat{k}) + (259.81\hat{i} + 150\hat{j}) \times (-11.7\hat{i} - 6.6\hat{j} + 26.7\hat{k})$

$$= \begin{vmatrix} \hat{i} & \hat{j} & \hat{k} \\ 0 & -300 & 0 \\ 0 & 27 & 53.4 \end{vmatrix} + \begin{vmatrix} \hat{i} & \hat{j} & \hat{k} \\ -150 & 259.81 & 0 \\ 13.2 & -23.4 & 53.4 \end{vmatrix} + \begin{vmatrix} \hat{i} & \hat{j} & \hat{k} \\ 259.81 & 150 & 0 \\ -11.7 & -66 & 26.7 \end{vmatrix}$$

$= (-16020\hat{i}) + (13873.85\hat{i} + 8010\hat{j} + 80.51\hat{k}) + (4005\hat{i} - 6936.93\hat{j} + 40.254\hat{k})$

$= (1858.85\hat{i} + 1073.07\hat{j} + 120.7645\hat{k})$

**15. A container of weight W is suspended from ring A. Cable BAC passes through the ring and is attached to fixed supports at B and C. Two forces $\vec{P} = P\hat{i}$ and $\vec{Q} = Q\hat{k}$ are applied to the ring to maintain the container in position shown. Knowing that W = 376 N, determine P and Q.**



Scanned with CamScanner

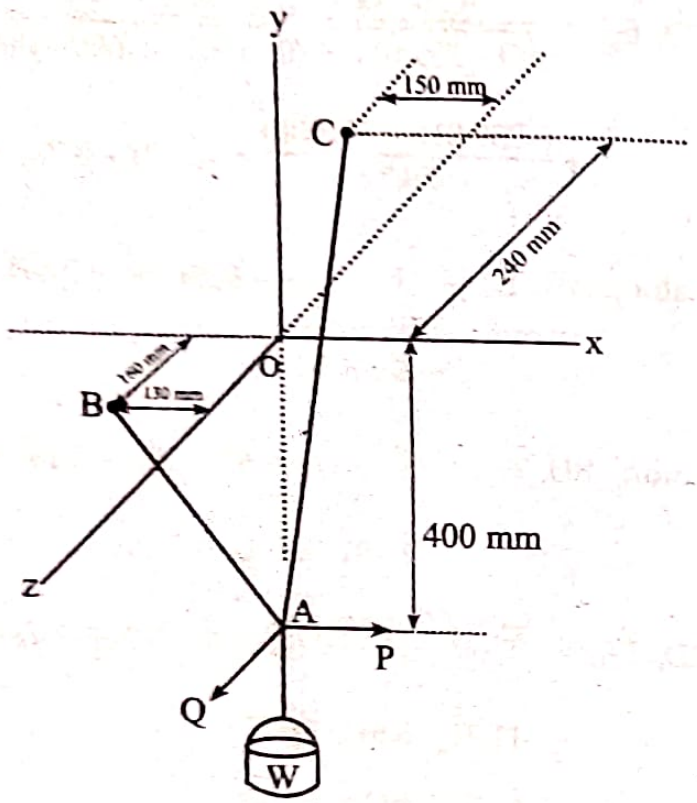


**Solution:**

Coordinates are: A(0, –400, 0), B(–130, 0, 160), C(–150, 0, –240).

$T_{AB} = T_{AC} = T$ [Same cable BAC]

$$\vec{T}_{AB} = T\frac{\overrightarrow{AB}}{|\overrightarrow{AB}|}$$

$$= T\frac{(-130\hat{i} + 400\hat{j} + 160\hat{k})}{450}$$

$$= T\left(\frac{-13}{45}\hat{i} + \frac{40}{45}\hat{j} + \frac{16}{45}\hat{k}\right)$$

$$\vec{T}_{AC} = T\frac{\overrightarrow{AC}}{|\overrightarrow{AC}|}$$

$$= T\frac{(-150\hat{i} + 400\hat{j} - 240\hat{k})}{490}$$

$$= T\left(\frac{-15}{49}\hat{i} + \frac{40}{49}\hat{j} - \frac{24}{49}\hat{k}\right)$$



Scanned with CamScanner

We have,

$\Sigma\vec{F} = 0$

or, $\vec{T}_{AB} + \vec{T}_{AC} + P\hat{i} + Q\hat{k} - W\hat{j} = 0$

or, $\left(\frac{-13}{45}T - \frac{15}{49}T + P\right)\hat{i} + \left(\frac{40}{45}T + \frac{40}{49}T - W\right)\hat{j} + \left(\frac{16}{45}T - \frac{24}{49}T + Q\right)\hat{k} = 0$

On equating the coefficients of $\hat{i}$, $\hat{j}$ and $\hat{k}$ to zero, we get

$0.595\,T = P$

$1.705\,T = W$

$0.134\,T = Q$

Substituting W = 376N, we get

T = 220.5 N

$\therefore \quad P = 0.595 \times 220.5 = 131.2N$

$Q = 0.134 \times 220.5 = 29.6\ N$

**16. The direction cosines of the line of action of a force with magnitude 200 N passing through point A(2, –2, 2) is (0.5, 0.707, 0.5). Find moment of force about point P(–2, 2, –2).**

**Solution:** Given F = 200 N

Unit vector in the direction of $\vec{F}$ is

$\hat{f} = 0.5\hat{i} + 0.707\hat{j} + 0.5\hat{k}$

Force $(\vec{F}) = F\hat{f} = 200\,(0.5\hat{i} + 0.707\hat{j} + 0.5\hat{k})$

$= 100\hat{i} + 141.4\hat{j} + 100\hat{k}$

$\vec{r}_{PA} = (2 + 2)\,\hat{i} + (-2 - 2)\hat{j} + (2 + 2)\,\hat{k} = 4\hat{i} - 4\hat{j} + 4\hat{k}$

$\vec{M} = \vec{r}_{PA} \times \vec{F} = (4\hat{i} - 4\hat{j} + 4\hat{k}) \times (100\hat{i} + 141.4\hat{j} + 100\hat{k})$

$= -965.6\hat{i} + 965.6\hat{k}$

**17. Determine the tension in the cable BC which holds a part AB of length 4 m from sliding. The part has a mass of 10 Kg. Assume all the contact surfaces are smooth.**



Scanned with CamScanner

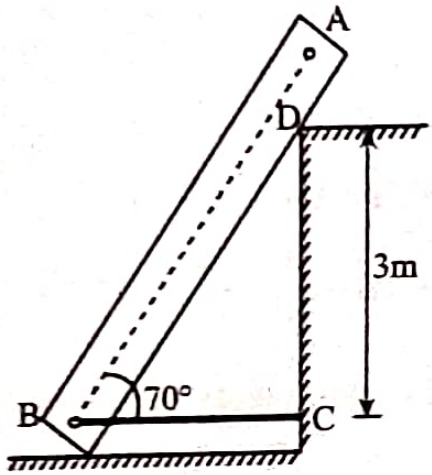


**Solution:**

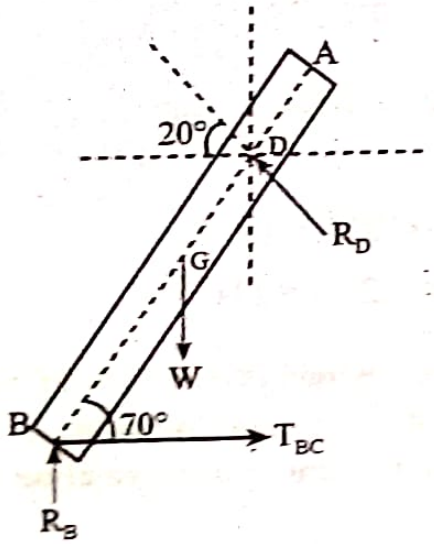


**Free body diagram**

Length BD = $\frac{3}{\sin 70°}$ = 3.1925

BG = 2m as G is the point C.G.

$(+\circlearrowleft)\ \Sigma M_B = 0$

or, $W \times 2\cos 70° - R_D \times 3.1925 = 0$

or, $mg \times 2\cos 70° - R_D \times 3.1925 = 0$

or, $R_D = 21.02$ N

$(\overset{+}{\rightarrow})\ \Sigma F_x = 0$

or, $T_{BC} - R_D \cos 20° = 0$

or, $T_{BC} = 21.02 \times \cos 20° = 19.752$ N

∴ The tension in BC is 19.752 N



Scanned with CamScanner

**18.** **In the system shown in figure, a 5 m long pole is held in vertical position by three gay wires AB, AC and AD. If the tension of 600 N is induced in AD and the resultant forces at A is to be vertical, determine the tension in cables AB and AC.**

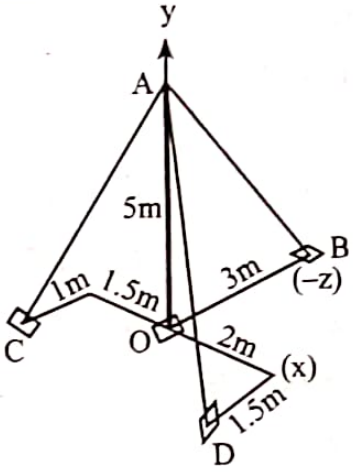


**Solution:**

The forces applied at A are $\vec{T}_{AC}$, $\vec{T}_{AD}$, $\vec{T}_{AB}$, and $\vec{P}$ where $\vec{P} = P\hat{j}$ as it is vertical.

The coordinate of different points are A(0, 5, 0), B(0, 0, –3), C(–1.5, 0, 1), D(2, 0, 1.5).

$\overrightarrow{AB} = 0\hat{i} - 5\hat{j} - 3\hat{k}$, AB = 5.831

$\overrightarrow{AC} = (-1.5\hat{i} - 5\hat{j} + 1\hat{k})$, AC = 5.315

$\overrightarrow{AD} = (2\hat{i} - 5\hat{j} + 1.5\hat{k})$, AD = 5.590

$$\vec{T}_{AB} = T_{AB}\,\hat{f}_{AB} = T_{AB}\left(\frac{0\hat{i} - 5\hat{j} - 3\hat{k}}{5.831}\right)$$

$$\vec{T}_{AC} = T_{AC}\,\hat{f}_{AC} = T_{AC}\left(\frac{-1.5\hat{i} - 5\hat{j} + 1\hat{k}}{5.315}\right)$$

$$\vec{T}_{AD} = T_{AD}\,\hat{f}_{AD} = T_{AD}\left(\frac{2\hat{i} - 5\hat{j} + 1.5\hat{k}}{5.590}\right)$$

Applying equilibrium condition,



Scanned with CamScanner

$$\Sigma\vec{F} = 0$$

$$\text{or, } \vec{T}_{AB} + \vec{T}_{AC} + \vec{T}_{AD} + \vec{P} = 0$$

$$\text{or, } T_{AB}\left(\frac{0\hat{i} - 5\hat{j} - 3\hat{k}}{5.831}\right) + T_{AC}\left(\frac{-1.5\hat{i} - 5\hat{j} + 1\hat{k}}{5.315}\right) + T_{AD}\left(\frac{2\hat{i} - 5\hat{j} + 1.5\hat{k}}{5.590}\right) + P\hat{j} = 0$$

$$\text{or, } (-0.2822T_{AC} + 0.3578T_{AD})\hat{i} + (-0.8575T_{AB} - 0.941T_{AC} - 0.8944T_{AD} + P)\hat{j} + (-0.5145T_{AB} + 0.1881T_{AC} + 0.2683T_{AD})\hat{k} = 0\hat{i} + 0\hat{j} + 0\hat{k}$$

Equating like coefficients, we get

$-0.2822T_{AC} + 0.3578T_{AD} = 0$ ..... (i)

$-0.8575T_{AB} - 0.941T_{AC} - 0.8944T_{AD} + P = 0$ ..... (ii)

$-0.5145T_{AB} + 0.1881T_{AC} + 0.2683T_{AD} = 0$ ..... (iii)

Given $T_{AD} = 600$ N.

From equation (i), $T_{AC} = 760.74$ N

From equation (iii), $T_{AB} = 591.01$ N

From equation (ii), $P = 1759.29$ N

**19. The 190N force P acts on a bell crank as shown. Find the two equal vertical forces at C and D which are equivalent to the couple found at point B.**

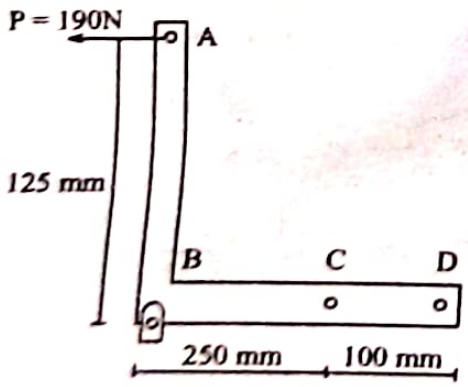


**[2018 Spring, PoU]**

**Solution:**

The figure can be drawn as:



Scanned with CamScanner

P = 190N

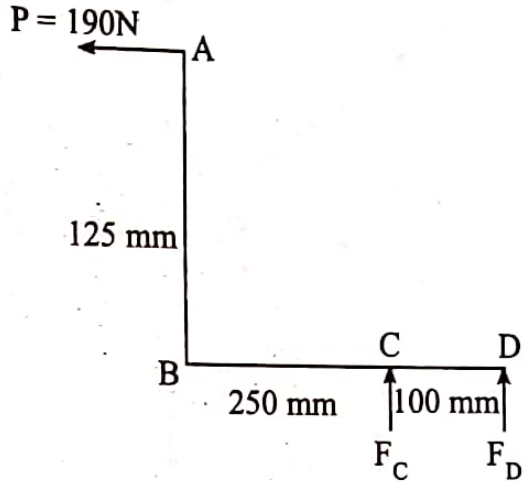


Let, $F_C$ and $F_D$ be the equal vertical force at C and D

i.e., $F_C = F_D = R$

Couple at B = 190 × 125

or, $R \times 250 + R \times 350 = 23750.$

or, $600\ R = 23750$

or, $R = 39.58$ N

**20. Determine the magnitude and direction of resultant force in the following diagram. Where F = 2500 N and P = 2760 N**

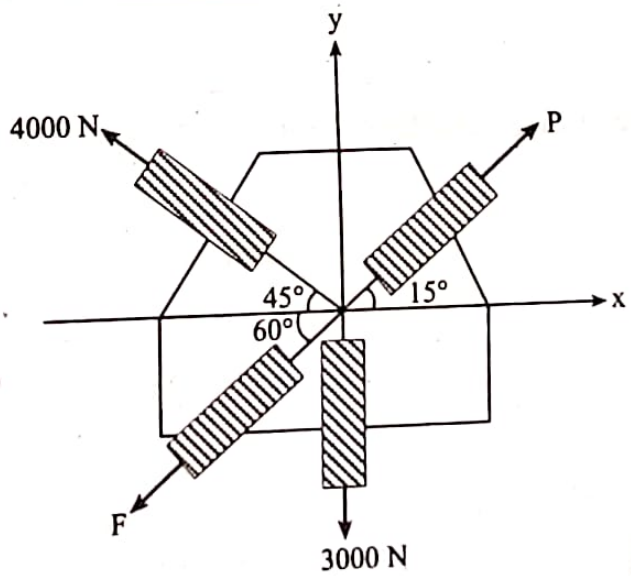


[2019 Fall, PoU]

**Solution:**

The figure can be drawn as:



Scanned with CamScanner

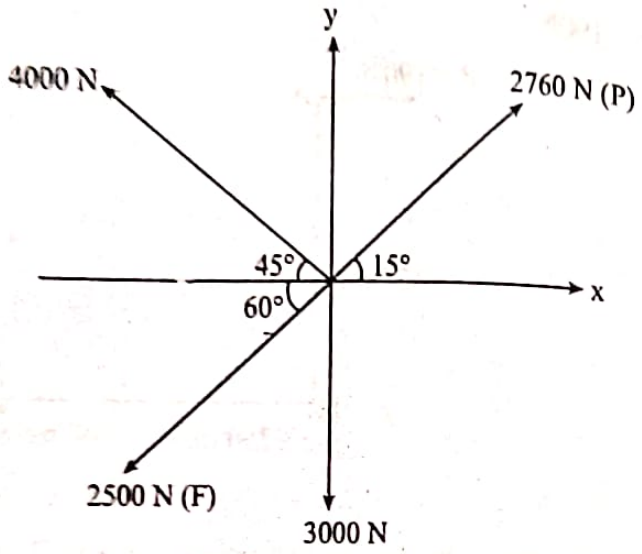


1. Resolving all the forces horizontally,

$(\overset{+}{\rightarrow})\ \Sigma F_x = 2760\cos 15° - 4000\cos 45° - 2500\cos 60°$

$= -1412.47\text{ N} = 1412.47\text{ N}\ (\leftarrow)$

2. Resolving all the forces vertically,

$(+\uparrow)\ \Sigma F_y = 2760\sin 15° + 4000\sin 45° - 2500\sin 60° - 3000$

$= -1622.3\text{ N} = 1622.3\text{ N}\ (\downarrow)$

3. Magnitude of resultant $= \sqrt{(\Sigma F_x)^2 + (\Sigma F_y)^2}$

$= \sqrt{(1412.47)^2 + (1622.3)^2}$

$= 2151.02\text{ N}$

4. Direction of resultant, $\text{Tan}\alpha = \dfrac{\Sigma F_y}{\Sigma F_x}$

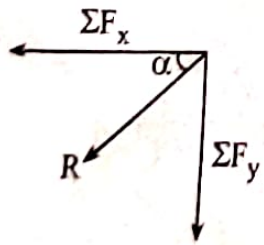


or, $\text{Tan}\alpha = \dfrac{1622.3}{1412.47}$

or, $\alpha = 48.95°$



Scanned with CamScanner

**21. Three forces $F_1$, $F_2$ and $F_3$ all of which act on a point A of the bracket specified in figure below. Determine the magnitude and direction of these forces.**

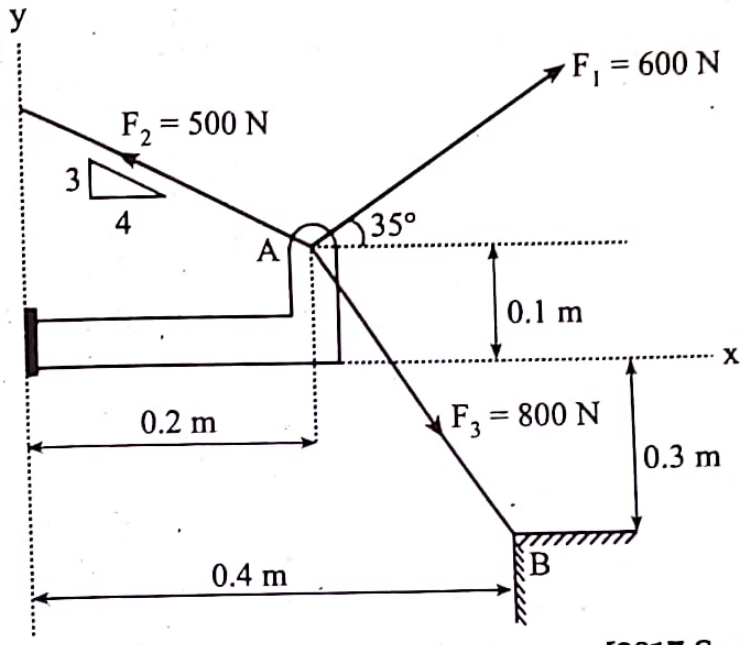


**[2017 Spring, PoU]**

**Solution:**

Since all the forces act at a point A of the bracket,

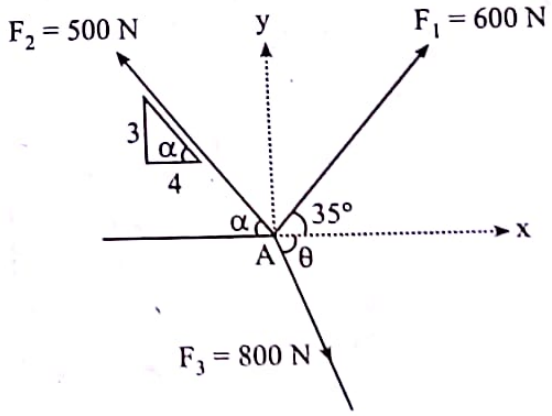


So, $\alpha = \text{Tan}^{-1}\left(\frac{3}{4}\right) = 36.87°$

$\theta = \text{Tan}^{-1}\left(\frac{0.1 + 0.3}{0.4 - 0.2}\right) = 63.43°$

1. Resolving all the forces horizontally,

$(\overset{+}{\rightarrow})\ \Sigma F_x = 600 \cos 35° - 500 \cos 36.87° + 800 \cos 63.43°$

$= 449.32$ N $(\rightarrow)$



Scanned with CamScanner

2. Resolving all the forces vertically,

$$(+\uparrow)\ \Sigma F_y = 500 \sin 36.87° + 600 \sin 35° - 800 \sin 63.43°$$

$$= -71.36 \text{ N } (\rightarrow) = 71.36 \text{ N } (\leftarrow)$$

3. Magnitude of the resultant (R) $= \sqrt{(\Sigma F_x)^2 + (\Sigma F_y)^2}$

$$= \sqrt{(449.32)^2 + (71.36)^2}$$

$$= 454.95 \text{ N}$$

4. Direction of the resultant (β) $= \text{Tan}^{-1}\left(\frac{\Sigma F_y}{\Sigma F_x}\right)$

$$= \text{Tan}^{-1}\left(\frac{71.36}{449.32}\right) = 9.02°$$

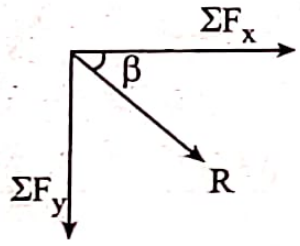


**22. A square foundation mat supports the four columns with the weight as shown. Determine the magnitude and point of application of the resultant of the four loads.**

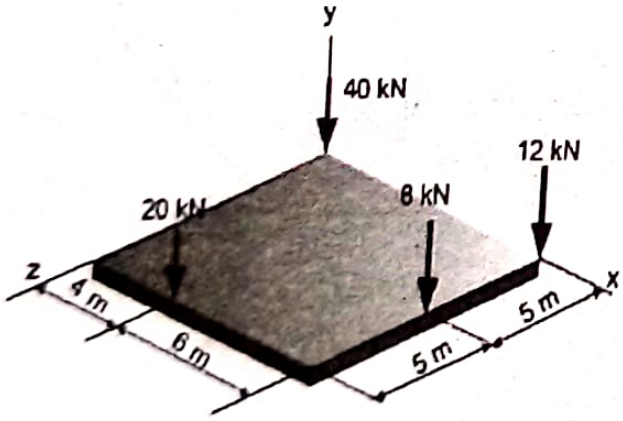


**[2015, 2017 Spring, PoU]**

***Solution:***

$\vec{R}$ be the resultant of the load and P(x, z) be the point of application.

Taking O as a origin,



Scanned with CamScanner

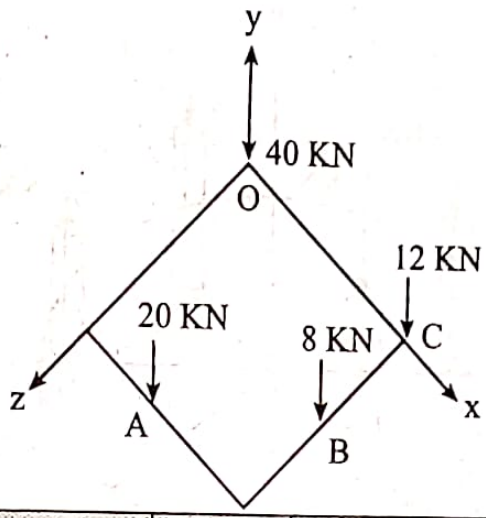


| Points | r (m) | F (KN) | r × F (KNm) |
|---|---|---|---|
| O | 0 | $-40\hat{j}$ | 0 |
| A | $4\hat{i} + 10\hat{k}$ | $-20\hat{j}$ | $-80\hat{k} + 200\hat{i}$ |
| B | $10\hat{i} + 5\hat{k}$ | $-8\hat{j}$ | $-80\hat{k} + 40\hat{i}$ |
| C | $10\hat{i}$ | $-12\hat{j}$ | $-120\hat{k}$ |
| | Sum | $-80\hat{j}$ | $240\hat{i} - 280\hat{k}$ |

Applying Varignon's theorem, moment of $\vec{R}$ at O must be equal to sum of moment of all other forces at same point O.

$\vec{r} \times \vec{R} = \Sigma$ Moment of all other forces at O.

or, $(x\hat{i} + z\hat{k}) \times (-80\hat{j}) = 240\hat{i} - 280\hat{k}$

or, $-80x\hat{k} + 80z\hat{i} = 240\hat{i} - 280\hat{k}$

Equation like vectors

$-80x = -280 \Rightarrow x = 3.5$ m

$80z = 240 \Rightarrow z = 3$ m

$\therefore$ Magnitude of resultant $= -80\hat{j}$

Point of application $(x, z) = (3.5, 3)$ m

**23. A concrete foundation mat of 5 m radius supports four equally spaced columns, each of which loaded 4 m from the centre of the mat. Determine the magnitude and point of application of the resultant of the four loads.**



Scanned with CamScanner

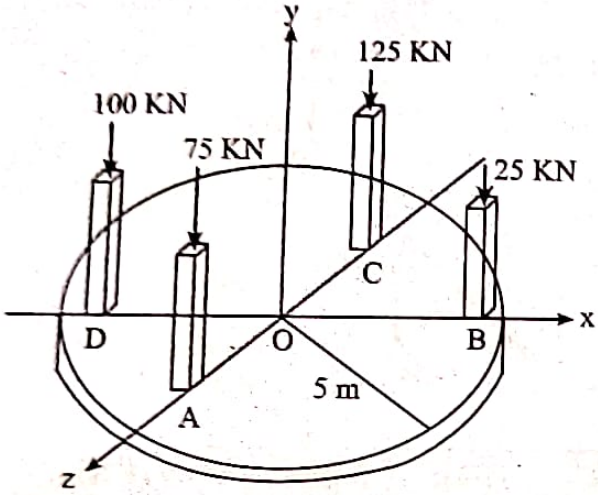


[2018 Spring, PoU]

**Solution:**

The figure can be drawn as:

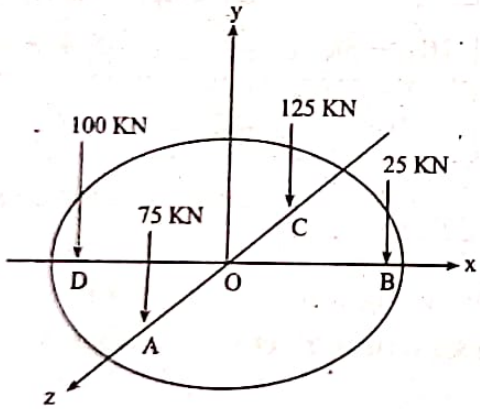


Let, $\vec{R}$ be the resultant of the load & P(x, z) be the point of application.

Taking O as a origin,

| Points | r (m) | F (KN) | r×F (KNm) |
|---|---|---|---|
| O | 0 | 0 | 0 |
| A | $4\hat{k}$ | $-75\hat{j}$ | $300\hat{i}$ |
| B | $4\hat{i}$ | $-25\hat{j}$ | $-100\hat{k}$ |
| C | $-4\hat{k}$ | $-125\hat{j}$ | $-500\hat{i}$ |
| D | $-4\hat{i}$ | $-100\hat{j}$ | $400\hat{k}$ |
| | Sum | $-325\hat{j}$ | $-200\hat{i} + 300\hat{k}$ |



Scanned with CamScanner

Applying Varignon's theorem, moment of $\vec{R}$ at O must be equal to moment of all other forces at the same point O.

$\vec{r} \times \vec{R} = \Sigma$ Moment of all other forces at O.

or, $(x\hat{i} + z\hat{k}) \times (-325\hat{j}) = -200\hat{i} + 300\hat{k}$

or, $-325x\hat{k} + 325z\hat{i} = -200\hat{i} + 300\hat{k}$

Equating like vectors,

$-325x = 300 \Rightarrow x = \frac{300}{-325} = -0.92$ m

and, $325z = -200 \Rightarrow z = -0.61$m

$\therefore$ Magnitude of resultant $= -325\hat{j}$

Point of application $(x, z) = (-0.92, -0.61)$ m

**24. The 6-m boom AB has a fixed end A. A steel cable is stretched from the free end B of the boom to the point C located on the vertical wall. If the tension in the cable is 2.5KN, determine the moment about A of the force exerted by the cable at B.**

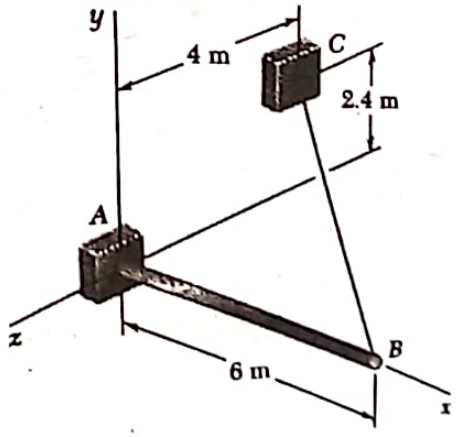


**[2016 Fall, PoU]**

**Solution:**

We have to determine moment about A of force $\vec{T}_{BC}$

$\vec{T}_{BC} =$ Magnitude of $T_{BC} \times$ unit vector along the direction of BC

$$= 2500 \times \frac{\vec{r}_{BC}}{|\vec{r}_{BC}|}$$

Coordinate of A(0, 0, 0), B(6, 0, 0), C(0, 2.4, –4)



Scanned with CamScanner

$$\vec{T_{BC}} = 2500 \times \frac{(-6\hat{i} + 2.4\hat{j} - 4\hat{k})}{\sqrt{(-6)^2 + (2.4)^2 + (-4)^2}}$$

$$= 329\,(-6\hat{i} + 2.4\hat{j} - 4\hat{k})$$

Moment about A of force exerted by cable at B

$$\vec{M} = \vec{r_{BC}} \times 329\,(-6\hat{i} + 2.4\hat{j} - 4\hat{k})$$

$$= 6\hat{i} \times 329\,(-6\hat{i} + 2.4\hat{j} - 4\hat{k})$$

$$= (4737.6\hat{k} + 7896\hat{j})\ \text{Nm}$$

**25. Knowing that tension in cable AC is 475 N, determine the resultant of three force exerted at point A of the beam AB. Figure given is on 2 D plane.**

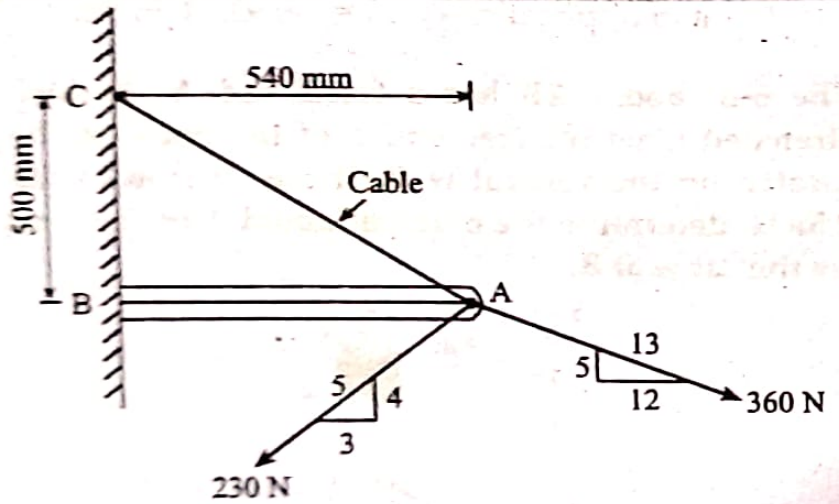


**[2017 Fall, PoU]**

**Solution:**

Since all the forces act at a point A of the beam AB, figure can be drawn as:

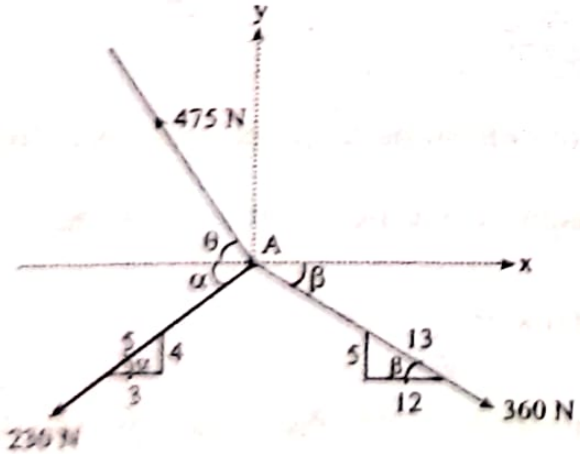




Scanned with CamScanner

$$\theta = \text{Tan}^{-1}\left(\frac{500}{540}\right) = 42.7°$$

$$\alpha = \text{Tan}^{-1}\left(\frac{4}{3}\right) = 53.13°$$

$$\beta = \text{Tan}^{-1}\left(\frac{5}{12}\right) = 22.61°$$

1. Resolving all the forces horizontally,

$$(\overset{+}{\rightarrow})\ \Sigma F_x = 360\cos 22.61° - 230\cos 53.13° - 475\cos 42.7°$$
$$= -154.75\text{ N} = 154.75\text{ N}\ (\leftarrow)$$

2. Resolving all the forces vertically,

$$(+\uparrow)\ \Sigma F_y = 475\sin 42.7° - 360\sin 22.61° - 230\sin 53.13°$$
$$= -0.278\text{ N} = 0.278\text{ N}\ (\downarrow)$$

3. Magnitude of resultant (R)

$$= \sqrt{(\Sigma F_x)^2 + (\Sigma F_y)^2}$$
$$= \sqrt{(0.278)^2 + (154.75)^2}$$
$$= 154.75\text{ N}$$

4. Direction of resultant ($\alpha$)

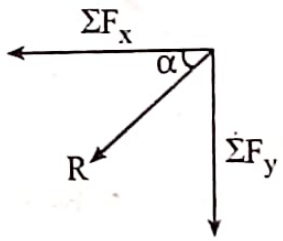


$$= \tan^{-1}\left(\frac{\Sigma F_y}{\Sigma F_x}\right)$$

$$= \tan^{-1}\left(\frac{0.278}{154.75}\right) = 0.1°$$

**26. A force and a couple act (fig. 1b) on a square plate of side 20 cm. Replace the given force and a couple with a single fore applied at a point located on AB. Also determine the distance from A to the point of application of force.**

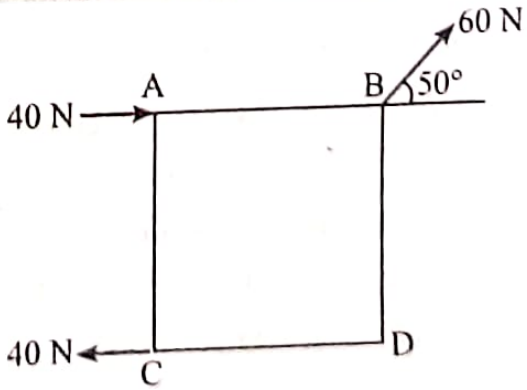


[2017 Fall, PoU]



Scanned with CamScanner

**Solution:**

a. A single force applied at a point located on the line AB = 60 N∠50°.

b. Let, x be the distance from A to point of application of force

Moment of force at A=Σ Moment of all other forces at A

or, $x \times 60\sin 50° = 60\sin 50° \times 20 - 40 \times 20$

or, $x = 2.6$ m

**27. Knowing that α = 35°, determine the resultant of the three forces shown.**

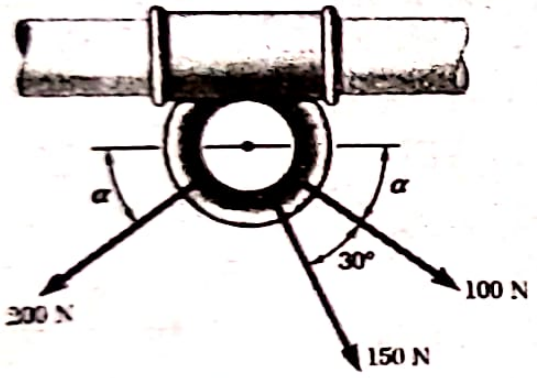


**[2018 Fall, PoU]**

**Solution:**

The figure can be drawn as:

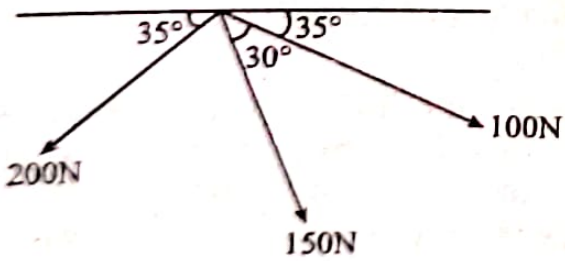


i. Resolving all the forces horizontally,

$(\overset{+}{\rightarrow})\ \Sigma F_x = 150\cos(35° + 30°) + 100\cos 35° - 200\cos 35°$

$= -18.53\ N = 18.53\ N\ (\leftarrow)$

ii. Resolving all the forces vertically,

$(+\uparrow)\ \Sigma F_y = -200\sin 35° - 150\sin 65° - 100\sin 35°$

$= -308.01\ N = 308.01\ N\ (\downarrow)$

iii. Magnitude of resultant $(R) = \sqrt{(\Sigma F_x)^2 + (\Sigma F_y)^2}$



Scanned with CamScanner

$$= \sqrt{(18.53)^2 + (308.01)^2}$$
$$= 308.56 \text{ N}$$

iv. Direction of resultant, $\text{Tan}\alpha = \dfrac{\Sigma F_y}{\Sigma F_x}$

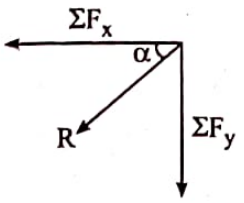


or, $\alpha = \tan^{-1}\left(\dfrac{308.01}{18.53}\right) = 86.55°$

**28. Determine the resultant of the four forces on a body as shown.**

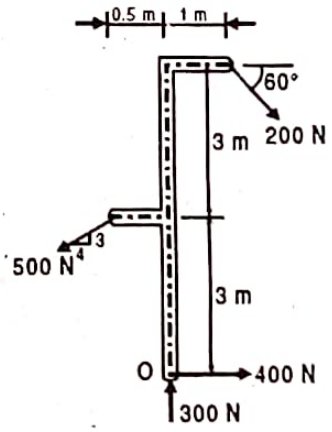


**[2018 Fall, PoU]**

**Solution:**

The figure can be drawn as:

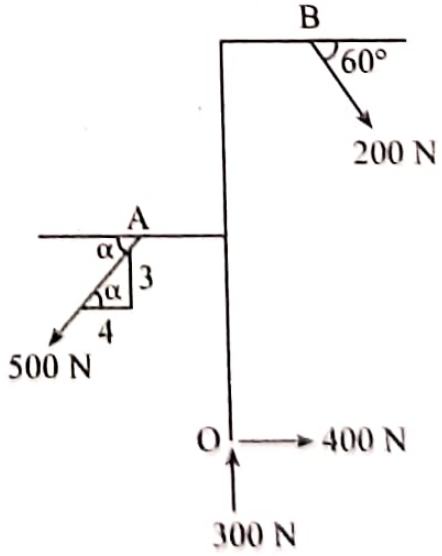




Scanned with CamScanner

$$\alpha = \tan^{-1}\left(\frac{3}{4}\right) = 36.86°$$

i. Resolving all the forces horizontally,

$$(\overset{+}{\rightarrow})\ \Sigma F_x = 400 + 200\cos 60° - 500\cos 36.86°$$
$$= 99.94\ N\ (\rightarrow)$$

ii. Resolving all the forces vertically,

$$(+\uparrow)\ \Sigma F_y = 300 - 200\sin 60° - 500\sin 36.86°$$
$$= -173.13\ N = 173.13\ N\ (\downarrow)$$

iii. Magnitude of resultant (R) $= \sqrt{(\Sigma F_x)^2 + (\Sigma F_y)^2}$

$$= \sqrt{(99.94)^2 + (173.13)^2}$$
$$= 199.9N$$

iv. Direction of resultant,

$$\alpha = \text{Tan}^{-1}\left[\frac{\Sigma F_y}{\Sigma F_x}\right]$$

or, $\alpha = \text{Tan}^{-1}\left(\frac{173.13}{99.94}\right) = 60°$

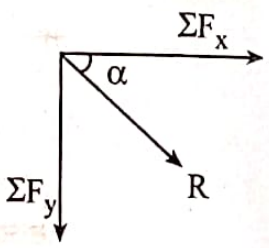


**29. A vertical pole is guyed by three cables PA, PB and PC tied at a common point P, 10 m above the ground. The base point of the cable are A(–3, 0, –4), B(1, –1, 5), C(5, 0, –1). If the tension forces in the cables are adjusted to be 15, 18 and 20 KN respectively. Make calculation for the force on the pole at P.**

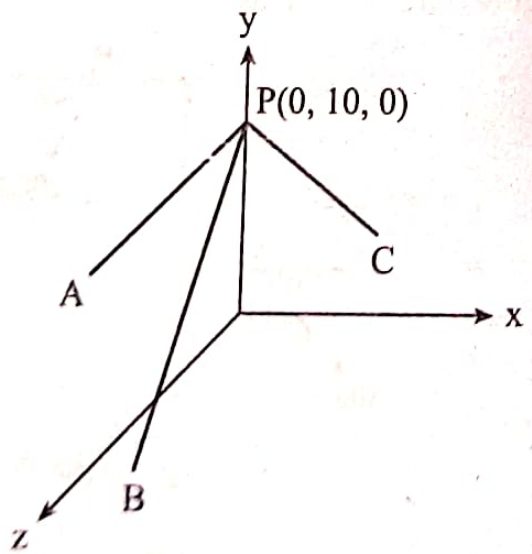




Scanned with CamScanner

**Solution:**

We have to calculate $\overrightarrow{PA}$, $\overrightarrow{PB}$ and $\overrightarrow{PC}$ i.e., $\vec{F_1}$, $\vec{F_2}$ and $\vec{F_3}$ respectively.

$\overrightarrow{PA}$ = Magnitude of tension × unit vector along the direction of PA.

$$= 15 \times \frac{[(x_2 - x_1)\hat{i} + (y_2 - y_1)\hat{j} + (z_2 - z_1)\hat{k}]}{\sqrt{(x_2 - x_1)^2 + (y_2 - y_1)^2 + (z_2 - z_1)^2}}$$

$$= 15 \times \frac{(-3\hat{i} - 10\hat{j} - 4\hat{k})}{\sqrt{(-3)^2 + (-10)^2 + (-4)^2}}$$

So, $\vec{F_1} = \overrightarrow{PA} = -4.02\hat{i} - 13.41\hat{j} - 5.36\hat{k}$

For PB,

$$\overrightarrow{PB} = 18 \times \frac{[(1)\hat{i} + (-1-10)\hat{j} + (5)\hat{k}]}{\sqrt{(1)^2 + (-11)^2 + (5)^2}}$$

$$= 18 \times \frac{[\hat{i} - 11\hat{j} + 5\hat{k}]}{\sqrt{147}}$$

So, $\vec{F_2} = \overrightarrow{PB} = 1.48\hat{i} - 16.34\hat{j} + 7.42\hat{k}$

For PC,

$$\overrightarrow{PC} = 20 \times \frac{[(5)\hat{i} + (-10)\hat{j} + (-1)\hat{k}]}{\sqrt{(5)^2 + (-10)^2 + (-1)^2}}$$

$$= 20 \times \frac{[5\hat{i} - 10\hat{j} + 1\hat{k}]}{\sqrt{126}}$$

So, $\vec{F_3} = \overrightarrow{PC} = 8.91\hat{i} - 17.8\hat{j} - 1.78\hat{k}$

$\therefore$ Force on the pole P = $\vec{F_1} + \vec{F_2} + \vec{F_3}$

$$= (-4.02\hat{i} - 13.41\hat{j} - 5.36\hat{k}) + (1.48\hat{i} - 16.34\hat{j} + 7.42\hat{k})$$

$$+ (8.91\hat{i} - 17.8\hat{j} - 1.78\hat{k})$$

$$= 6.37\hat{i} - 47.54\hat{j} + 0.28\hat{k}$$



Scanned with CamScanner

**30. The truss structure shown carries a load (P) and is supported by cable BC and pinned at D to the wall. Determine the force in the cable BC and reaction force at D.**

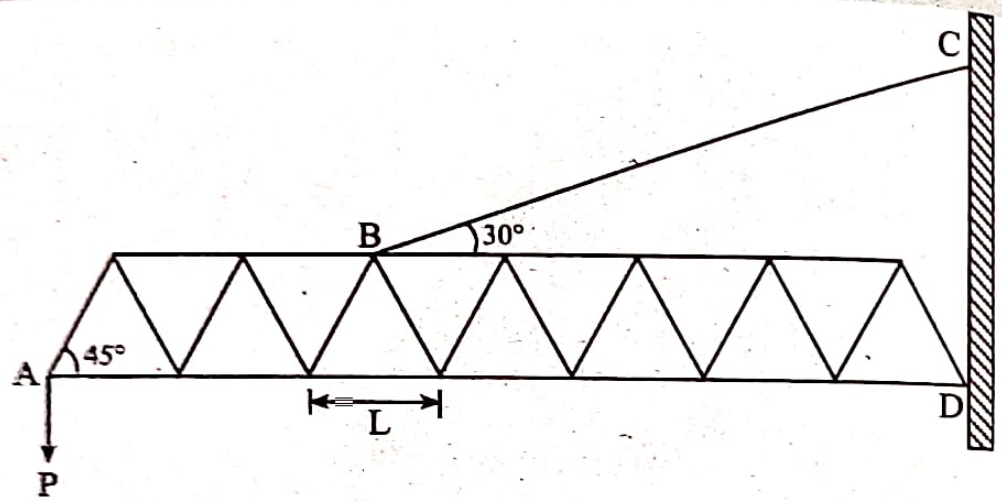


**[2016 Spring, PoU]**

**Solution:**

The figure can be drawn as:

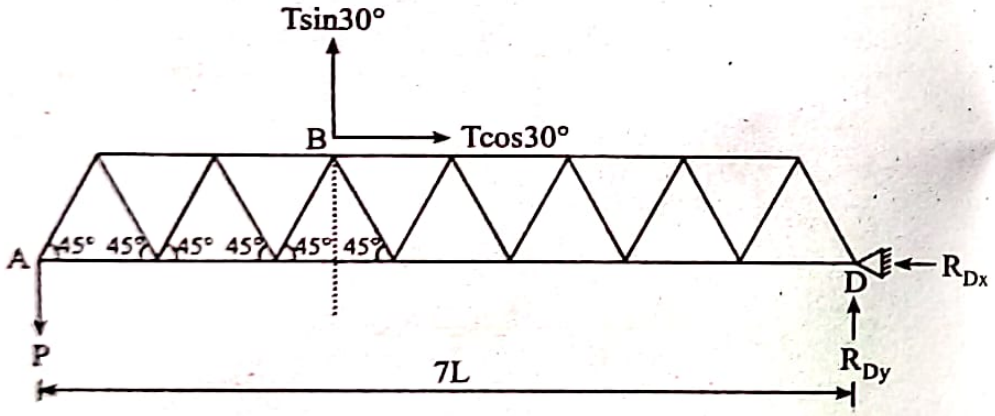


Let, tension on cable BC bc "T"

Height of triangle, $\tan 45° = \frac{h}{(L/2)} \Rightarrow h = L/2$

$(\circlearrowleft +)\Sigma M_D = 0$

or, $T\sin 30° \times (4.5L)\ T\cos 30° \times \left(\frac{L}{2}\right) - P \times (7L) = 0$

or, $2.25T(L) + 0.433T(L) = P \times (7L)$

or, $T = 2.6P$

$(\overrightarrow{+})\Sigma F_x = 0$



Scanned with CamScanner

or, $-R_{Dx} = 0 \Rightarrow R_{Dx} = 0$

$(+\uparrow)\ \Sigma F_y = 0$

or, $R_{Dy} + T\sin30° - P = 0$

or, $R_{Dy} = P - (2.6P)\sin30° = -0.3P = 0.3P\ (\downarrow)$

$\therefore$ Force in the cable BC = 2.6 P and reaction force at D are:

$R_{Dy} = 0.03\ P\ (\downarrow)$

$R_{Dx} = 0$

**31. Knowing that the tension in rope AC is 365N, determine the resultant of the three forces exerted at point C of post BC.**

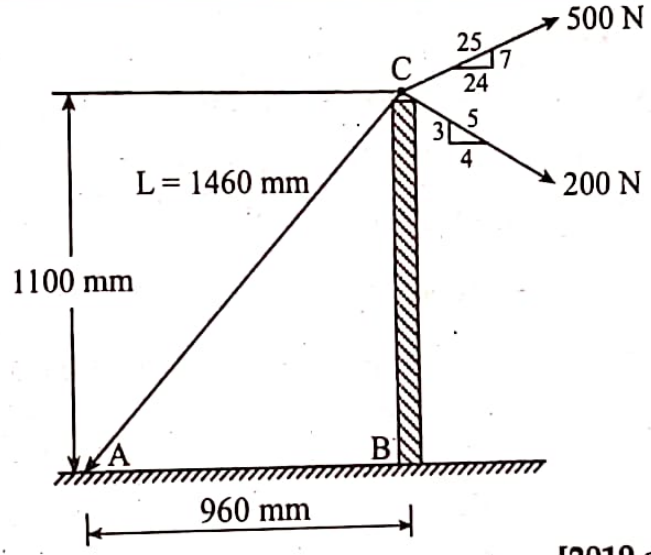


**[2019 spring, PoU]**

**Solution:**

The figure can be drawn as:

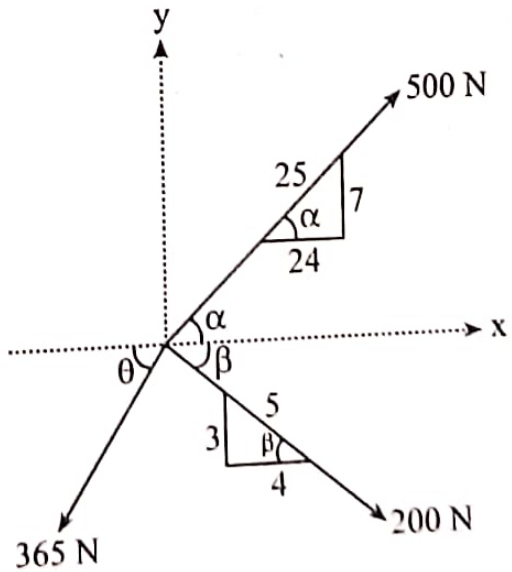




Scanned with CamScanner

Here,

$$\alpha = \text{Tan}^{-1}\left(\frac{7}{24}\right) = 16.26°$$

$$\theta = \sin^{-1}\left(\frac{1100}{1460}\right) = 48.89°$$

$$\beta = \text{Tan}^{-1}\left(\frac{3}{4}\right) = 36.86°$$

1. Resolving all the forces horizontally,

$$(\overrightarrow{+})\Sigma F_x = 500\cos 16.26° + 200\cos 36.86° - 365\cos 48.89°$$

$$= 400.03N(\rightarrow)$$

2. Resolve all the forces vertically,

$$(+\uparrow)\Sigma F_y = 500\sin 16.26° - 200\sin 36.86° - 365\sin 48.89°$$

$$= -254.98N$$

$$= 254.98N\ (\downarrow)$$

3. Magnitude of resultant (R) $= \sqrt{(\Sigma F_x)^2 + (\Sigma F_y)^2}$

$$= \sqrt{(400.3)^2 + (254.98)^2}$$

$$= 474.38N$$

4. Direction of resultant,

$$\text{Tan } q = \frac{\Sigma F_y}{\Sigma F_x} \Rightarrow q = \text{Tan}^{-1}\left[\frac{\Sigma F_y}{\Sigma E_x}\right]$$

or, $q = \text{Tan}^{-1}\left(\frac{254.98}{400.03}\right)$

or, $q = 32.51°$

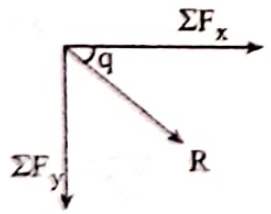




Scanned with CamScanner

**32.** **For the system of forces shown, determine its equivalent force moment system at the origin O.**

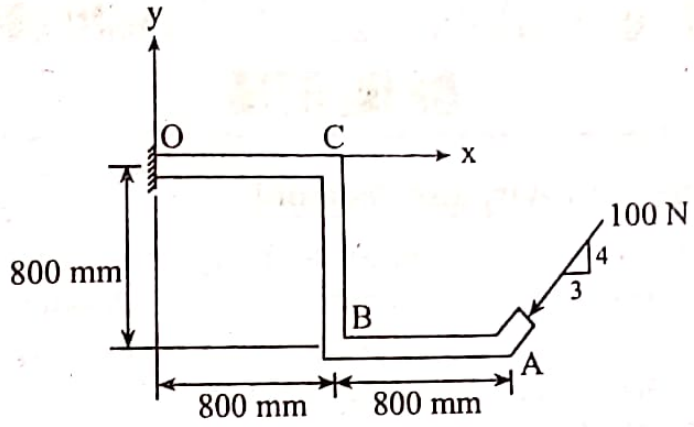


**[2020 Fall, PoU]**

**Solution:**

The figure can be drawn as:

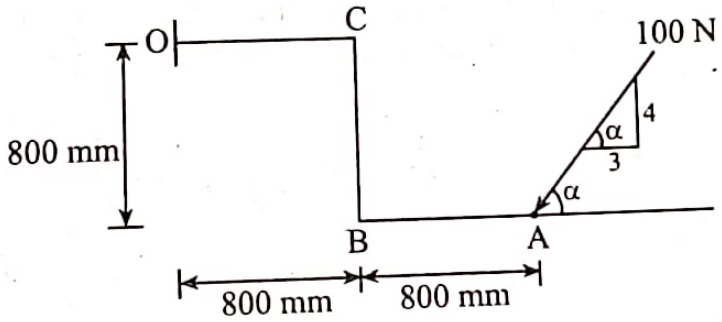


Here,

$$\alpha = \text{Tan}^{-1}\left(\frac{4}{3}\right) = 53.13°$$

Equivalent force at the origin O = 100N ∠53.13° (↙)

Equivalent moment at the origin O

$$= 100\sin 53.13° \times (1600) - 100\cos 53.13° \times (800)$$

$$= 80 \text{ Nm } (+\circlearrowright)$$



Scanned with CamScanner

CHAPTER - 4

# CENTRE OF GRAVITY, CENTROID AND MOMENT OF INERTIA

## 4.1 Centre of Gravity and Centroid

*Centre of gravity* is defined as the point through which the whole weight of the body is assumed to act. It is denoted by c.g. or G.

*Center of mass* is the point where the whole mass of body is assumed to act. It differs from the centre of gravity only when the gravitational field is not uniform and non-parallel.

The *centroid* or *centre of area* is defined as the point where the whole area of the figure is assumed to be concentrated. It is analogous to centre of gravity when a body has area but not weight. Centroid may also be defined as a point in a plane area such that the moment of area about any axis through that point is zero.

Centroid of line $(\bar{x}, \bar{y})$ can be calculated as:

$$\bar{x} = \frac{\int x\, dl}{\int dl}, \quad \bar{y} = \frac{\int y\, dl}{\int dl}$$

Centroid of area $(\bar{x}, \bar{y})$ can be calculated as:

$$\bar{x} = \frac{\int x\, dA}{\int dA}, \quad \bar{y} = \frac{\int y\, dA}{\int dA}$$

**Centroid of common shapes of lines:**

a. Quarter-circular arc

$$\bar{x} = \frac{2r}{\pi} \qquad \bar{y} = \frac{2r}{\pi} \qquad \text{Length} = \frac{\pi r}{2}$$

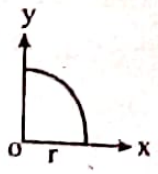


b. Semi-circular arc

$$\bar{x} = 0 \qquad \bar{y} = \frac{2r}{\pi} \qquad \text{Length} = \pi r$$

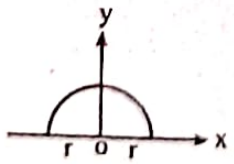




Scanned with CamScanner

c. Arc of circle

$$\bar{x} = \frac{r \sin \alpha}{\alpha} \quad \bar{y} = 0 \quad \text{Length} = 2\alpha r$$

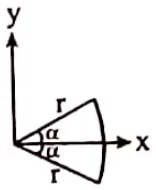


**Centroid of common shapes of areas:**

a. Triangular area

$$\bar{x} = \frac{2b}{3} \quad \bar{y} = \frac{h}{3} \quad \text{Area} = \frac{bh}{2}$$

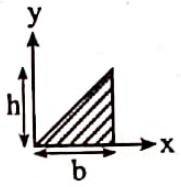


$$\bar{x} = \frac{b}{3} \quad \bar{y} = \frac{h}{3} \quad \text{Area} = \frac{bh}{2}$$

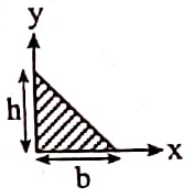


b. Quarter-circular area

$$\bar{x} = \frac{4r}{3\pi} \quad \bar{y} = \frac{4r}{3\pi} \quad \text{Area} = \frac{\pi r^2}{4}$$

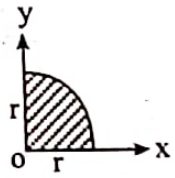


c. Semicircular area

$$\bar{x} = 0 \quad \bar{y} = \frac{4r}{3\pi} \quad \text{Area} = \frac{\pi r^2}{2}$$

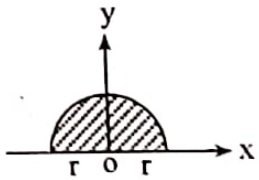


d. Quarter-elliptical area

$$\bar{x} = \frac{4a}{3\pi} \quad \bar{y} = \frac{4b}{3\pi} \quad \text{Area} = \frac{\pi ab}{4}$$

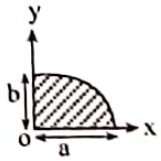


e. Semi-elliptical area

$$\bar{x} = 0 \quad \bar{y} = \frac{4b}{3\pi} \quad \text{Area} = \frac{\pi ab}{2}$$

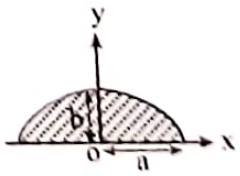




Scanned with CamScanner

f. Circular sector

$$\bar{x} = \frac{2r\sin\alpha}{3\alpha} \qquad \bar{y} = 0 \qquad \text{Area} = \alpha r^2$$

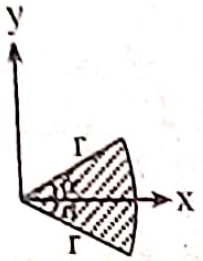


## 4.2 First Moment of Area, Second Moment of Area/Moment of Inertia, and Radius of Gyration

The integral $\int x\, dA$ is known as the first moment of area A with respect to the y-axis. Similarly, the integral $\int y\, dA$ is known as the first moment of area A with respect to the x-axis.

If the first moment of inertia is again multiplied by the perpendicular distance between axes and centroid, the product so obtained is called *second moment of area* or *moment of inertia*.

Inertia refers to the property of a body by virtue of which body resists any change in its state of rest or of uniform motion. The moment of inertia of a rigid body is a quantity that determines the torque needed for a desired angular acceleration about a rotational axis. So, moment of inertia is essentially a measure of resistance to bending and is applied while dealing with the deflection or deformation of member due to bending.

If the entire area of a lamina is concentrated at a point such that there is no change in moment of inertia about a given axis, then distance of that point from the given axis is called *radius of gyration*.

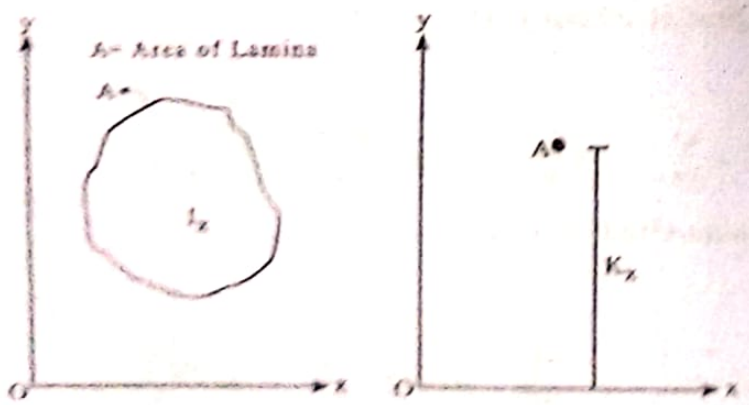




Scanned with CamScanner

Suppose MOI of an irregular lamina about x-axis is $I_x$. If at a distance of $k_x$ from x-axis, its whole area is distributed then, moment of inertia about x-axis can be written as

$$I_x = k_x^2 A$$

$$\text{or, } k_x = \sqrt{\frac{I_x}{A}}$$

This distance $k_x$ is called *radius of gyration w.r.t. x-axis.*

$$\text{Similarly, } k_y = \sqrt{\frac{I_y}{A}}$$

where the distance $k_y$ is called *radius of gyration w.r.t. y-axis.*

## 4.3 Perpendicular Axis Theorem

**Statement:**

If $I_x$ and $I_y$ be the moment of inertia of a plane section about two perpendicular axes, x-axis and y-axis meeting at O respectively, the moment of inertia about the axis z, perpendicular to both x-axis and y-axis is given by

$$I_z = I_x + I_y$$

**Proof:**

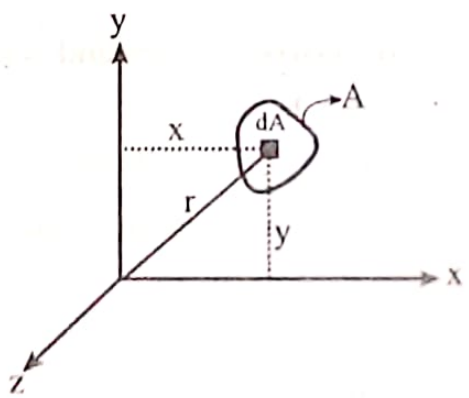


Consider a small lamina of area dA at x and y distance from y-axis and x-axis respectively.

From figure, $r^2 = x^2 + y^2$

From definition, $I_z = \int r^2 \, dA$

$= \int (x^2+y^2) \, dA$

$= \int x^2 dA + \int y^2 \, dA$

$= I_x + I_y$ proved.



Scanned with CamScanner

## 4.4 Parallel Axis Theorem

**Statement:**

If the moment of inertia of a plane area, A, about an axis through its C.G. is $(I_G)_x$, then moment of inertia of the area about any other axis x'x', parallel to xx and at a distance h from C.G. is given by

$$I_{x'} = (I_G)_x + Ah^2$$

**Proof:**

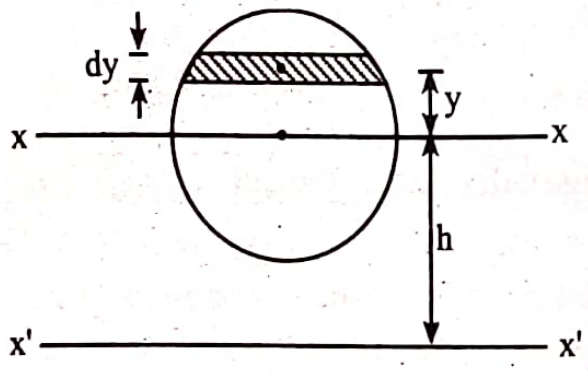


Let us consider a strip with elemental area dA at a distance y from centroidal axis xx, then

$$(I_G)_x = \sum dAy^2$$

$$I_{x'} = \sum dA\,(y+h)^2$$

where h = distance between xx-axis and x'x'-axis.

$$= \sum dA\,(y^2 + 2yh + h^2)$$

$$= \sum y^2 dA + 2h\sum dAy + h^2 \sum dA$$

Since $\sum dAy$ = First moment of area about centroidal axis = 0, we get

$$I_{x'} = (I_G)_x + 0 + Ah^2$$

$$\therefore I_{x'} = (I_G)_x + Ah^2 \quad \text{proved.}$$



Scanned with CamScanner

## SOLUTION TO IMPORTANT QUESTIONS

**1. Find the polar moment of inertia at point 'O' for the shaded area in the figure.**

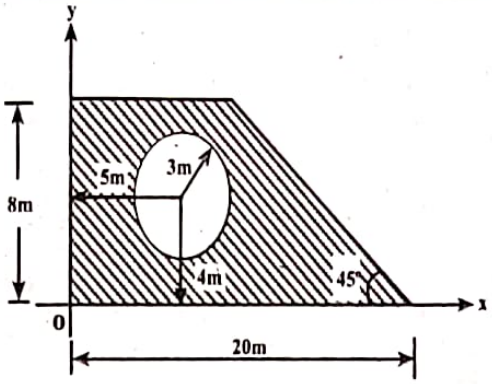


**Solution:**

The polar moment of inertia about O is given by

$I_p = I_x + I_y$

where $I_x$ and $I_y$ are M.O.I. about x-axis and y-axis respectively.

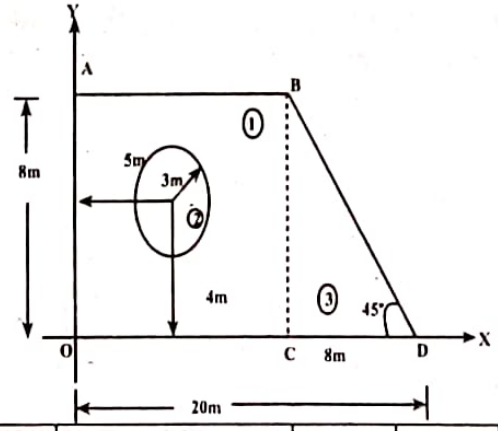


| S.N. | Components | $A_i(m^2)$ | $\bar{x}_i$ (m) | $\bar{y}_i$ (m) | $A_i\bar{x}_i$ ($m^3$) | $A_i\bar{y}_i$ ($m^3$) |
|---|---|---|---|---|---|---|
| (1) | Rectangle | $12\times8 = 96$ | 6 | 4 | 576 | 384 |
| (2) | Circle | $-\pi\times3^2 = -28.27$ | 5 | 4 | −141.35 | −113.08 |
| (3) | Triangle | $\frac{1}{2}\times8\times8 = 32$ | $12+\frac{1}{3}\times8$ =14.67 | $\frac{1}{3}\times8$ = 2.67 | 469.44 | 85.44 |
| | | $\Sigma A_i = 99.72$ | | | $\Sigma A_i\bar{x}_i$ =904.09 | $\Sigma A_i\bar{y}_i$ =356.36 |



Scanned with CamScanner

$$\bar{x} = \frac{\Sigma A_i \bar{x}_i}{\Sigma A_i} = \frac{904.09}{99.72} = 9.06 \text{ m},$$

$$\bar{y} = \frac{\Sigma A_i \bar{y}_i}{\Sigma A_i} = \frac{356.36}{99.72} = 3.57 \text{ m}$$

The moment of inertia about x-axis and y-axis can be calculated as

$$I_x = \left(\frac{b_1 h_1^3}{12} + A_1 y_1^2\right) - \left(\frac{\pi r^4}{4} + A_2 y_2^2\right) + \left(\frac{b_3 h_3^3}{36} + A_3 y_3^2\right)$$

$$= \left(\frac{12\times 8^3}{12} + 96\times 4^2\right) - \left(\frac{\pi\times 3^4}{4} + 28.27\times 4^2\right) + \left(\frac{8\times 8^3}{36} + 32\times 2.67^2\right)$$

$$= 1873.96 \text{ m}^4$$

$$I_y = \left(\frac{h_1 b_1^3}{12} + A_1 x_1^2\right) - \left(\frac{\pi r^4}{4} + A_2 x_2^2\right) + \left(\frac{h_3 b_3^3}{12} + A_3 x_3^2\right)$$

$$= 4420.85 \text{ m}^4$$

Polar moment of inertia, $I_p = I_x + I_y = 6294.81 \text{ m}^4$

**2. Determine the moment of inertia of the shaded area shown w.r.t. centroidal y-axis.**

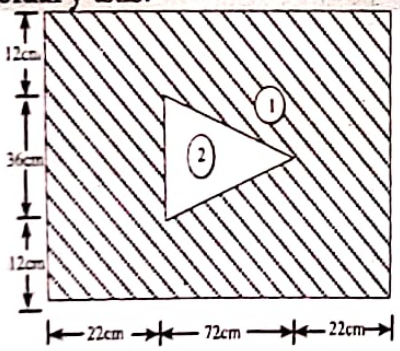


**Solution:**

| S.N. | Components | $A_i$(cm²) | $\bar{x}_i$ (cm) | $\bar{y}_i$ (cm) | $\Sigma A_i\bar{x}_i$ | $\Sigma A_i\bar{y}_i$ |
|---|---|---|---|---|---|---|
| (1) | Rectangle | 116×60 = 6960 | $\frac{22+72+22}{2}$ = 58 | $\frac{12+36+12}{2}$ = 30 | 403680 | 208800 |
| (2) | Triangle | $-\frac{1}{2}\times(36\times72)$ = −1296 | $22+\frac{72}{2}$ = 58 | 12+18 = 30 | −75168 | −38880 |
| | | $\Sigma A_i$ = 5664 | | | $\Sigma A_i\bar{x}_i$ = 328512 | $\Sigma A_i\bar{y}_i$ = 169920 |



Scanned with CamScanner

$$\bar{x} = \frac{\Sigma A_i \bar{x}_i}{\Sigma A_i} = 58 \text{ cm}$$

$$\bar{y} = \frac{\Sigma A_i \bar{y}_i}{\Sigma A_i} = 30 \text{ cm}$$

$$(I_G)_y = \left[\frac{h_1 b_1^3}{12} + A_1(x_1 - \bar{x})^2\right] - \left[\frac{h_2 b_2^3}{36} + A_2(x_2 - \bar{x})^2\right]$$

$$= \frac{60 \times 116^3}{12} - \frac{36 \times 72^3}{36} = 7524544 \text{ cm}^4$$

**3. Determine radius of gyration ($r_x$) of the angle section shown in figure below about centroidal x-axis.**

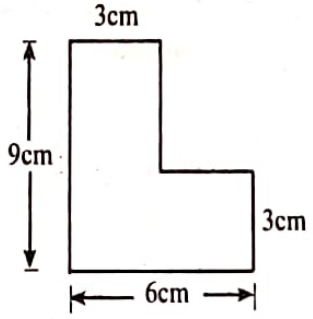


**Solution:**

Dividing the angle section into two parts as in figure below.

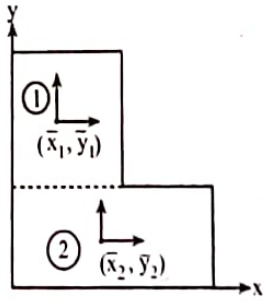


| Components | $A_i$ (cm²) | $\bar{x}_i$ (cm) | $\bar{y}_i$ (cm) | $A_i\bar{x}_i$ (cm³) | $A_i\bar{y}_i$ (cm³) |
|---|---|---|---|---|---|
| (1) | 6 × 3= 18 | $\frac{6}{2} = 3$ | $\frac{3}{2} = 1.5$ | 54 | 27 |
| (2) | 6 × 3= 18 | $\frac{3}{2} = 1.5$ | $3 + \frac{6}{2} = 6$ | 27 | 108 |

$$\bar{y} = \frac{\sum A_i \bar{y}_i}{\sum A_i} = \frac{108 + 27}{18 + 18} = 3.75 \text{ cm}$$



Scanned with CamScanner

Moment of inertia about centroidal x-axis is given by

$$(I_G)_x = [\frac{b_1h_1^3}{12} + A_1(y_1 - \bar{y})^2] + [\frac{b_2h_2^3}{12} + A_2(y_2 - \bar{y})^2]$$

$$= [\frac{6\times 3^3}{12} + 18(1.5 - 3.75)^2] + [\frac{3 \times 6^3}{12} + 18(6 - 3.75)^2]$$

$$= 104.625 + 145.125 = 249.75 \text{ cm}^4$$

Radius of gyration about centroidal x-axis is

$$r_x = \sqrt{\frac{(I_G)_x}{A}} = \sqrt{\frac{249.75}{36}} = 2.63 \text{ cm}$$

**4. Determine the polar moment of inertia and the polar radius of gyration of the shaded area as shown in figure below with respect to centroid.**

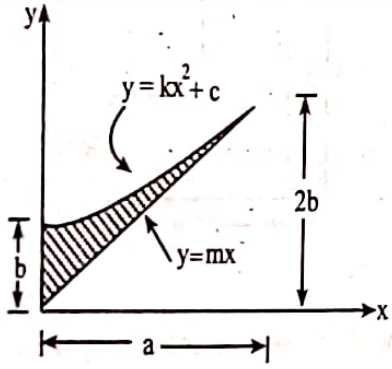


**Solution:**

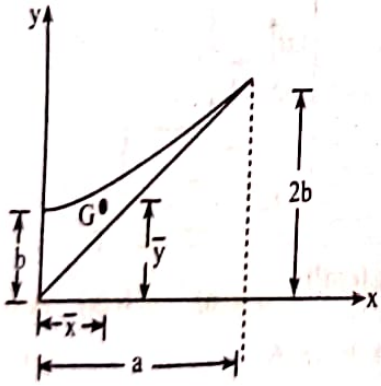


*Polar MOI about its centroid,* $(I_G)_p = (I_G)_x + (I_G)_y$

*where* $(I_G)_x$ = *MOI of shaded area about its centroidal x-axis,*

$(I_G)_y$ = *MOI of shaded area about its centroidal y-axis.*

*Here,* $y = kx^2 + c$



Scanned with CamScanner

When y = b, x = 0. This makes

$b = k \times 0^2 + c$

or, $c = b$

When y = 2b, x = a. This makes

$2b = k \times a^2 + b$

or, $k = \frac{b}{a^2}$

$m = \frac{2b}{a}$

To calculate total area, let's take a vertical strip of height h as shown in figure.

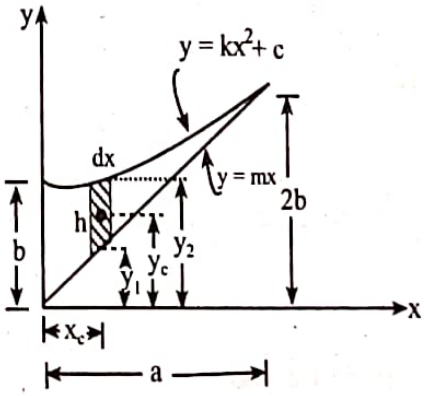


We have $A = \int dA = \int_0^a h dx = \int_0^a (y_2 - y_1) dx$

$$= \int_0^a (kx^2 + c - mx) dx$$

$$= \left[\frac{kx^3}{3} + cx - \frac{mx^2}{2}\right]_0^a$$

$$= \frac{ka^3}{3} + ca - \frac{ma^2}{2}$$

Putting value of k, c, and m, we get

$$A = \frac{b}{a^2} \times \frac{a^3}{3} + ab - \frac{2b}{a} \times \frac{a^2}{2} = \frac{ab}{3} + ab - ab = \frac{ab}{3}$$

$$\bar{x} = \frac{1}{A} \int x_c dA$$



Scanned with CamScanner

$$= \frac{3}{ab}\int_0^a x\,(h dx)$$

$$= \frac{3}{ab}\int_0^a x\,(kx^2 + c - mx)\,dx$$

$$= \frac{3}{ab}\left[\frac{kx^4}{4} + \frac{cx^2}{2} - \frac{mx^3}{3}\right]_0^a$$

$$= \frac{3}{ab}\left(k\frac{a^4}{4} + \frac{ca^2}{2} - \frac{a^3m}{3}\right)$$

$$= \frac{3}{ab}\left(\frac{b}{a^2} \times \frac{a^4}{4} + \frac{ba^2}{2} - \frac{2b}{a} \times \frac{a^3}{3}\right) = \frac{a}{4}$$

$$\bar{y} = \frac{1}{A}\int y_c dA$$

$$= \frac{3}{ab}\int_0^a \left(\frac{h}{2} + mx\right)(h\,dx) \qquad \left(y_c = y_1 + \frac{h}{2} \text{ where } h = y_2 - y_1\right)$$

$$= \frac{3}{ab} \times \frac{1}{2}\int_0^a (h + 2mx)\,hdx$$

$$= \frac{3}{2ab}\int_0^a (kx^2 + c - mx + 2mx)\,(kx^2 + c - mx)dx$$

$$= \frac{3}{2ab}\int_0^a (k^2x^4 + 2kx^2c + c^2 - m^2x^2)\,dx$$

$$= \frac{3}{2ab}\left[k^2\frac{x^5}{5} + 2kc\frac{x^3}{3} + c^2x - m^2\frac{x^3}{3}\right]_0^a$$

$$= \frac{3}{2ab}\left(k^2\frac{a^5}{5} + 2kc\frac{a^3}{3} + c^2a - m^2\frac{a^3}{3}\right)$$

$$= \frac{3}{2ab}\left(\frac{b^2}{a^4}\frac{a^5}{5} + 2 \times \frac{b}{a^2} \times b \times \frac{a^3}{3} + b^2a - \frac{4b^2}{a^2} \times \frac{a^3}{3}\right) = \frac{4b}{5}$$



Scanned with CamScanner

Since all portions of the differential element in the figure above are not at the same distance from the x-axis, we must treat the element as thin rectangle. The moment of inertia of the element with respect to x-axis is then

$$dI_x = \frac{1}{3}\left(y_2^3 - y_1^3\right) dx$$

$$I_x = \int dI_x$$

$$= \frac{1}{3}\int_0^a \left(y_2^3 - y_1^3\right) dx$$

$$= \frac{1}{3}\int_0^a \{(kx^2 + c)^3 - (mx)^3\} dx$$

$$= \frac{1}{3}\int_0^a \{(k^3x^6 + 3k^2x^4 + 3kx^2c^2 + c^3) - m^3x^3\} dx$$

$$= \frac{1}{3}\left[k^3\frac{a^7}{7} + 3k^2\frac{a^5}{5} + 3kc^2\frac{a^3}{3} + c^3a - \frac{m^3a^4}{4}\right]$$

Putting values of k, c and m, we get

$$I_x = \frac{26}{105}ab^3$$

$$I_y = \int x^2 dA$$

$$= \int_0^a x^2(y_2 - y_1)\, dx$$

$$= \int_0^a x^2\,(kx^2 + c - mx)\, dx$$

$$= \int_0^a (kx^4 + cx^2 - mx^3)\, dx = \frac{ka^5}{5} + \frac{ca^3}{3} - \frac{ma^4}{4}$$

Putting the values of k, c and m, we get

$$I_y = \frac{a^3b}{30}$$

MOI about centroidal x-axis is calculated as



Scanned with CamScanner

$$(I_C)_x = I_x - A\bar{y}^2$$

$$= \frac{26}{105}ab^3 - \frac{ab}{3} \times \left(\frac{4b}{5}\right)^2 = \frac{6}{175}ab^3$$

MOI about centroidal y-axis is calculated as

$$(I_C)_y = I_y - A\bar{x}^2$$

$$= \frac{a^3b}{30} - \frac{ab}{3}\left(\frac{a}{4}\right)^2 = \frac{a^3b}{80}$$

Polar moment of inertia about centroidal axis is

$$(I_C)_P = (I_C)_x + (I_C)_y$$

$$= \frac{6}{175}ab^3 + \frac{a^3b}{80}$$

Polar radius of gyration is given by

$$(k_C)_P = \sqrt{\frac{(I_C)_P}{A}}$$

$$= \sqrt{\frac{\frac{6ab^3}{175} + \frac{a^3b}{80}}{\frac{ab}{3}}} = \sqrt{\frac{18b^2}{175} + \frac{a^2}{60}}$$

**5. Locate the centroid of the area bounded by the curve as shown in figure, by the method of integration.**

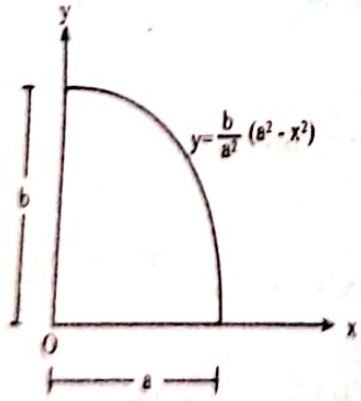


***Solution:***

Vertical strip of thickness dx is taken as shown in figure.



Scanned with CamScanner

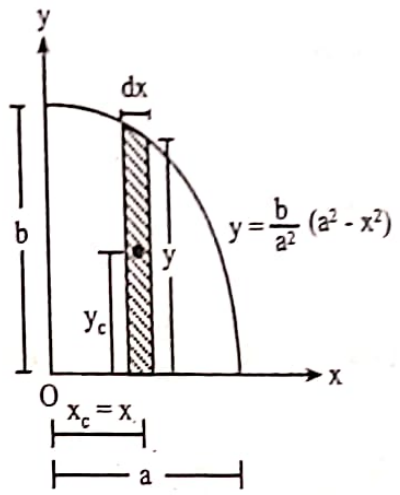


Let $\bar{x}$ and $\bar{y}$ be the required centroid.

Area under the curve, $A = \int_0^a dA$

$$= \int_0^a y\,dx$$

$$= \int_0^a \frac{b}{a^2}(a^2 - x^2)dx = \frac{2ab}{3}$$

$$\bar{x} = \frac{1}{A}\int_A x_c\,dA$$

$$= \frac{3}{2ab}\int_0^a x\,(ydx)$$

$$= \frac{3}{2ab}\int_0^a \frac{b}{a^2}(a^2x - x^3)dx \quad \left(\because xy = x\frac{b}{a^2}(a^2-x^2) = \frac{b}{a^2}(a^2x-x^3)\right)$$

$$= \frac{3}{2a^3}\left(\frac{a^4}{2} - \frac{a^4}{4}\right) = \frac{3a}{8}$$

$$\bar{y} = \frac{1}{A}\int_A y_c\,dA$$



Scanned with CamScanner

$$= \frac{3}{2ab}\int_0^a \frac{y}{2}\,(y\,dx)$$

$$= \frac{3}{4ab}\int_0^a y^2\,dx$$

$$= \frac{3}{4ab}\int_0^a \frac{b^2}{a^4}\{(a^2-x^2)^2\}\,dx = \frac{3b}{4a^5}\int_0^a (a^4-2a^2x^2+x^4)\,dx = \frac{2b}{5}$$

Hence, $\bar{x} = \frac{3a}{8}$ and $\bar{y} = \frac{2b}{5}$

**6. Determine the centroidal x and y coordinates of the hatched area.**

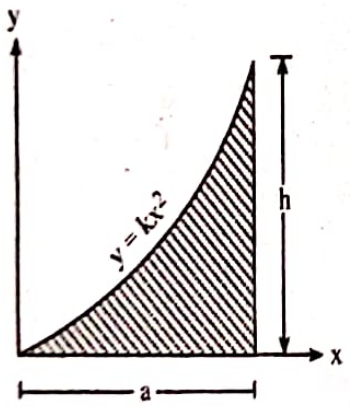


**Solution:**

Consider a small strip of area dA parallel to y-axis as shown in figure below.

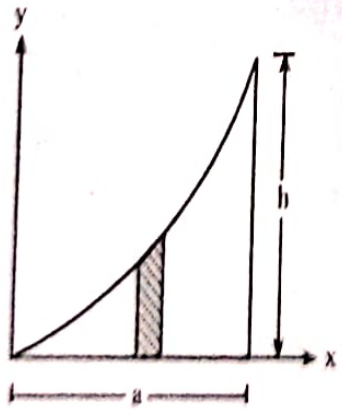


When $x = a$, $y = h$



Scanned with CamScanner

So, $h = ka^2$

or, $k = \frac{h}{a^2}$

$$A = \int dA = \int_0^a y\,dx = \int_0^a kx^2\,dx = \frac{h}{a^2}\frac{x^3}{3}\Big|_0^a = \frac{ah}{3}$$

$$\bar{x} = \frac{\int x_c dA}{A} = \frac{ah}{3}\int_0^a xy\,dx = \frac{3}{ah}\int_0^a x\frac{h}{a^2}x^2\,dx = \frac{3a}{4}$$

$$\bar{y} = \frac{\int y_c dA}{A} = \frac{3}{ah}\int_0^a \frac{y}{2}\,y\,dx = \frac{3}{2ah}\int_0^a \frac{h^2}{a^4}x^4 dx = \frac{3h}{10}$$

$$\therefore (\bar{x}, \bar{y}) = \left(\frac{3a}{4}, \frac{3h}{10}\right)$$

**7. Determine by direct integration method, the centroid of the area as shown in figure below.**

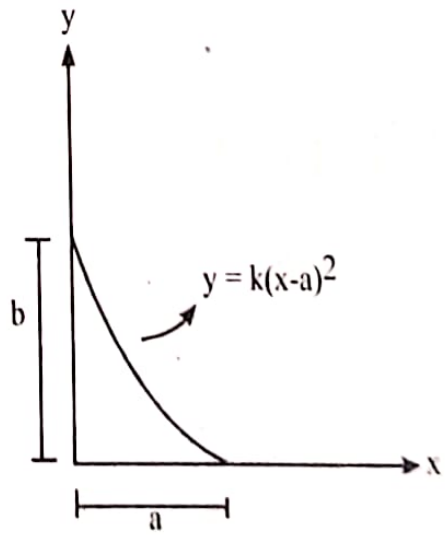


**Solution:**

Let's first find area A made by the given curve with x- axis and y-axis. For this consider a horizontal strip of thickness dy at height y and of width x.



Scanned with CamScanner

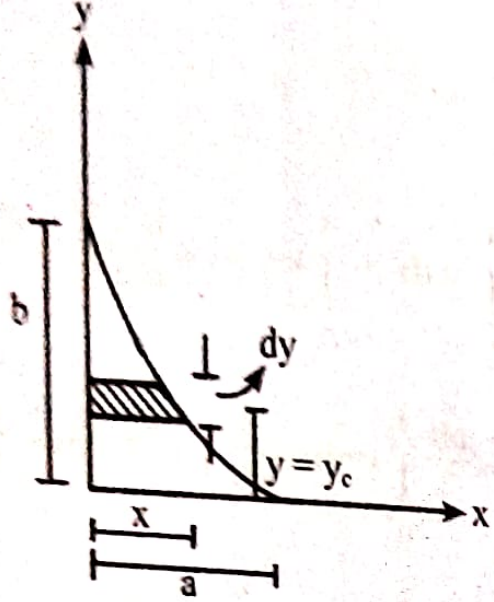


$$A = \int dA = \int_0^b x\,dy$$

$$= \int_0^b \left(\sqrt{\frac{y}{k}} + a\right) dy$$

$$= \int_0^b \left(\frac{y^{1/2}}{k^{1/2}} + a\right) dy$$

$$= \frac{1}{k^{1/2}}\frac{2}{3}\left[y^{3/2}\right]_0^b + a\left[y\right]_0^b$$

$$= \frac{2}{3k^{1/2}}\, b^{3/2} + ab$$

When $x = 0$, $y = b$

or, $ka^2 = b \Rightarrow k = \frac{b}{a^2}$

$$\therefore A = \frac{2a}{3b^{1/2}}\, b^{3/2} + ab = \frac{2}{3}ab + ab = \frac{5}{3}ab$$

For $\bar{y}$, taking horizontal strip as shown in figure.

$$\bar{y} = \frac{\int y_c\, dA}{A}$$

$$= \frac{3}{5ab}\int_0^b y x\, dy$$



Scanned with CamScanner

$$= \frac{3}{5ab}\int_0^b y\left(\sqrt{\frac{y}{k}} + a\right) dy$$

$$= \frac{3}{5ab}\left\{\int_0^b \left(\frac{y^{3/2}}{k^{1/2}} + ay\right) dy\right\}$$

$$= \frac{3}{5ab}\left\{\frac{2a}{5b^{1/2}}\left[y^{5/2}\right]_0^b + \frac{a}{2}\left[y^2\right]_0^b\right\}$$

$$= \frac{3}{5ab}\left\{\frac{2ab^{5/2}}{5b^{1/2}} + \frac{ab^2}{2}\right\} = \frac{27b}{50}$$

For $\bar{x}$, taking vertical strip as shown in figure.

$$\bar{x} = \frac{\int x_c dA}{A} = \frac{3}{5ab}\int_0^a x\, y dx$$

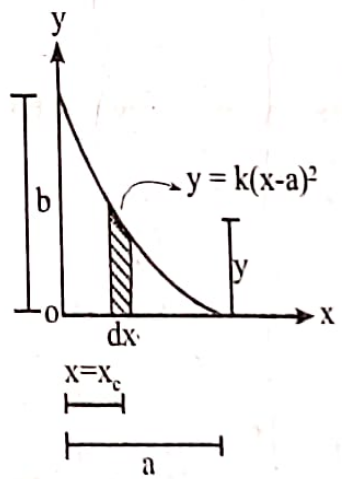


$$= \frac{3}{5ab}\int_0^a x\, k\, (x-a)^2\, dx$$

$$= \frac{3}{5ab} \times \frac{b}{a^2}\left\{\int_0^a (x^3 - 2x^2a + a^2x)\, dx\right\}$$

$$= \frac{3}{5ab^3}\left\{\frac{1}{4}\left[x^4\right]_0^a - \frac{2a}{3}\left[x^3\right]_0^a + \frac{a^2}{2}\left[x^2\right]_0^a\right\}$$

$$= \frac{3}{5ab^3}\left\{\frac{1}{4}a^4 - \frac{2a}{3} \times a^3 + \frac{a^2 \times a^2}{2}\right\} = \frac{a}{20}$$



Scanned with CamScanner

8. **Determine the moment of inertia about centroidal axis of the shaded plane area by using direct integration method.**

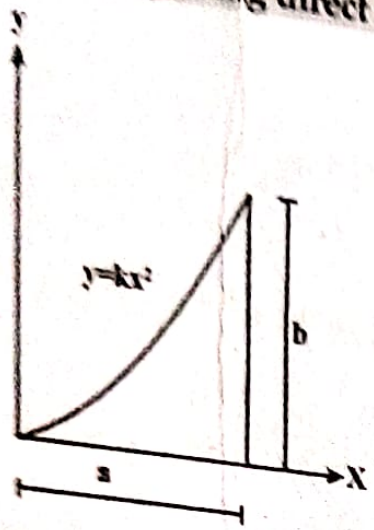


**Solution:**

$y = kx^2$

When $x = a$, $y = b$

$ka^2 = b$

or, $k = \frac{b}{a^2}$

Consider a vertical strip as shown in figure.

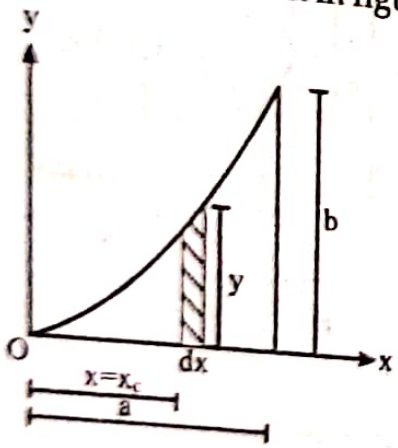


$$A = \int dA = \int y\,dx = \int_0^a kx^2 dx = k\frac{a^3}{3} = \frac{b}{a^2}\frac{a^3}{3} = \frac{ab}{3}$$

$$\bar{x} = \frac{\int x\,dA}{\int dA} = \frac{\int xy\,dx}{\int y\,dx} = \frac{\int_0^a x(kx^2)\,dx}{\int_0^a k\,x^2 dx} = \frac{k}{k} \times \frac{a^4}{4} \times \frac{3}{a^3} = \frac{3a}{4}$$



Scanned with CamScanner

$$\bar{y} = \frac{\int y_c dA}{\int dA}$$

$$= \frac{\int_0^a y\,(ydx)}{\int_0^a ydx}$$

$$= \frac{1}{2}\frac{\int_0^a k^2x^4dx}{\int_0^a kx^2dx} = k\times\frac{1}{2}\left(\frac{a^5}{5}\right)\times\frac{3}{a^3} = \frac{1}{2}\times\frac{3a^2}{5}\times\frac{b}{a^2} = \frac{3b}{10}$$

Consider horizontal strip of thickness dy as shown in fig.

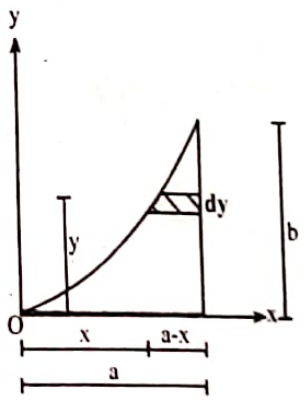


$$I_x = \int y_c^2 dA$$

$$= \int_0^b y^2\,(a - x)\,dy$$

$$= \int_0^b (ay^2 - xy^2)dy$$

$$= \frac{a\times b^3}{3} - \int_0^b \left(\frac{y^{\frac{1}{2}}}{K^{\frac{1}{2}}}\right) y^2\,dy$$



Scanned with CamScanner

$$= \frac{ab^3}{3} - \frac{2}{7} b^{\frac{7}{2}} \times \frac{a}{b^{\frac{1}{2}}} = \frac{ab^3}{3} - \frac{2ab^3}{7} = \frac{ab^3}{21}$$

$$(I_G)_x = I_x - A\bar{y}^2 = \frac{ab^3}{21} - \frac{ab}{3} \times \left(\frac{3b}{10}\right)^2 = \frac{37ab^3}{2100}$$

$$I_y = \int x_c^2 \, dA$$

$$= \int x^2 y dx$$

$$= \int_0^a x^2 kx^2 \, dx = k\int_0^a x^4 \, dx = k\frac{a^5}{5} = \frac{b}{a^2} \times \frac{a^5}{5} = \frac{a^3b}{5}$$

$$(I_G)_y = I_y - A\bar{x}^2 = \frac{a^3b}{5} - \frac{ab}{3} \times \left(\frac{3a}{4}\right)^2 = \frac{a^3b}{90}$$

**9. Determine the centroid of the shaded area shown in figure below, using direct integration method.**

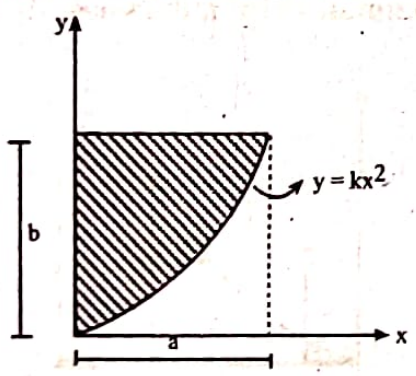


**Solution:**

When $x = a$, $y = b \Rightarrow ka^2 = b$

or, $k = \frac{b}{a^2}$

Consider a vertical strip as shown in figure. The strip is of height $(b - y)$ and width $dx$.

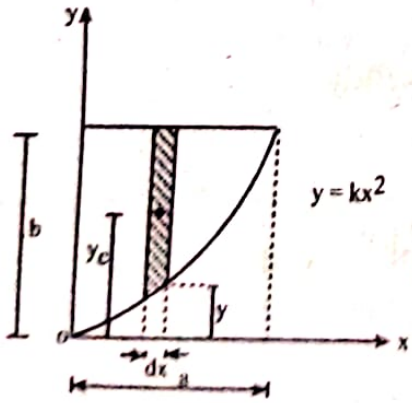




Scanned with CamScanner

$$A = \int dA = \int (b - y)dx$$

$$= \int_0^a (b - kx^2)dx$$

$$= b[x]_0^a - \frac{k}{3}[x^3]_0^a$$

$$= b(a - 0) - \frac{k}{3}a^3 = ab - \frac{b}{a^2} \times \frac{a^3}{3} = ab - \frac{ab}{3} = \frac{2ab}{3}$$

Consider the same vertical strip as shown in figure

$$\bar{y} = \frac{\int y_c dA}{A}$$

$$= \frac{3}{2ab}\int_0^a \left(y + \frac{b-y}{2}\right)(b - y)dx$$

$$= \frac{3}{4ab}\int_0^a (b^2 - y^2)dx = \frac{3}{4ab}\int_0^a (b^2 - k^2x^4)dx$$

$$= \frac{3}{4ab}\left\{b^2[x]_0^a - \frac{1}{5}k^2[x^5]_0^a\right\}$$

$$= \frac{3}{4ab}\left\{b^2(a - 0) - \frac{a^5}{5} \times \frac{b^2}{a^4}\right\}$$

$$= \frac{3}{4ab}\left(ab^2 - \frac{ab^2}{5}\right) = \frac{3}{4ab} \times \frac{4ab^2}{5} = \frac{3b}{5}$$

Consider the horizontal strip as shown in figure.

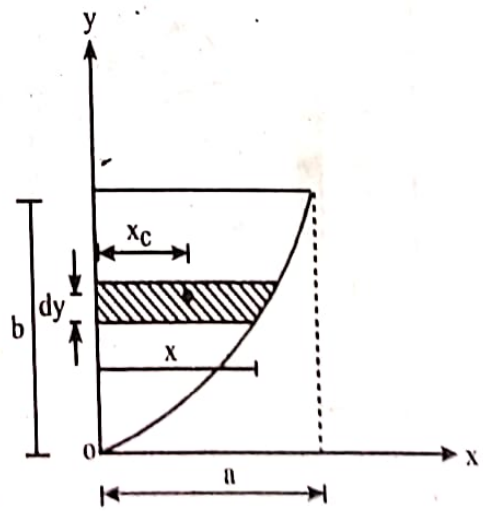




Scanned with CamScanner

$$\bar{x} = \frac{\int x_c dA}{A}$$

$$= \frac{3}{2ab}\int_0^b \frac{x}{2} x dy$$

$$= \frac{3}{4ab}\int_0^b x^2 dy$$

$$= \frac{3}{4ab}\int_0^a \frac{y}{k} dy = \frac{3}{4ab} \times \frac{a^2}{b} \times \frac{1}{2}[y^2]_0^b = \frac{3a}{8b^2} \times b^2 = \frac{3a}{8}$$

**10. Locate the centroid of the plane area as shown in figure below by the method of integration.**

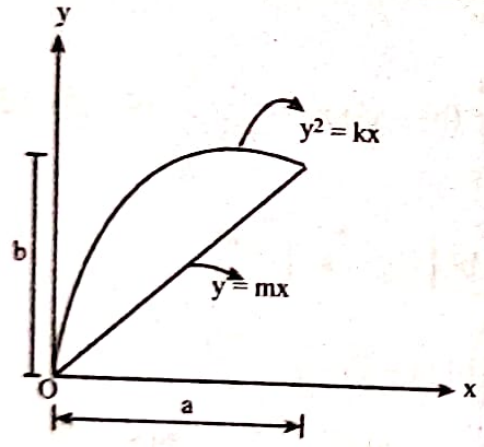


**Solution:**

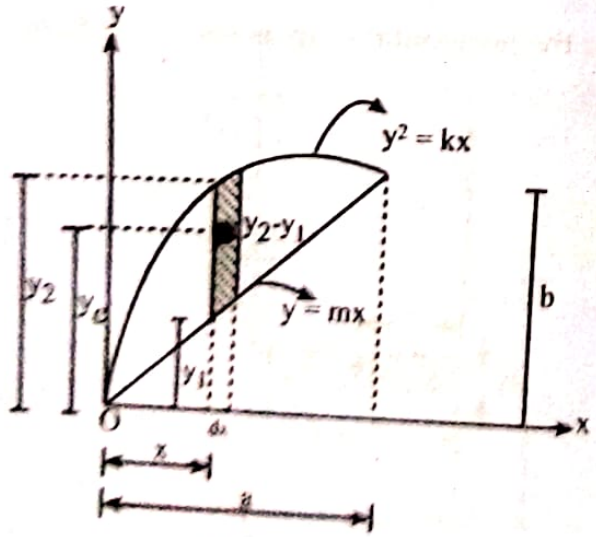




Scanned with CamScanner

Consider an elementary rectangular strip of height $(y_2 - y_1)$ and width dx.

Area of this small rectangular strip $(dA) = (y_2 - y_1)dx$

$$A = \int dA$$

$$= \int_0^a (y_2 - y_1)dx$$

$$= \int_0^a \left(\sqrt{kx} - mx\right) dx$$

$$= k^{1/2}\left[x^{3/2}\right]_0^a - \frac{m}{2}\left[x^2\right]_0^a = \frac{2}{3}k^{1/2}a^{3/2} - \frac{m}{2}a^2$$

When $x = a, y = b \Rightarrow ma = b$

$$\therefore m = \frac{b}{a}$$

When $x = a, y = b \Rightarrow ka = b^2$

$$\therefore k = \frac{b^2}{a}$$

$$A = \frac{2}{3}\frac{b}{a^{1/2}}a^{3/2} - \frac{1}{2}\frac{b}{a}a^2 = \frac{2}{3}ab - \frac{1}{2}ab = \frac{1}{6}ab$$

Considering the same figure,

$$\bar{y} = \frac{\int y_c\, dA}{A}$$

$$= \frac{6}{ab}\int_0^a y_c\,(y_2 - y_1)dx$$

$$= \frac{6}{ab}\int_0^a \left(y_1 + \frac{y_2 - y_1}{2}\right)(y_2 - y_1)dx$$

$$= \frac{3}{ab}\int_0^a (y_1 + y_2)(y_2 - y_1)\, dx$$



Scanned with CamScanner

$$=\frac{3}{ab}\int_0^a (kx - m^2x^4)dx$$

$$=\frac{3}{ab}\left\{k\left[\frac{x^2}{2}\right]_0^a - \frac{m^2}{3}\left[\frac{x^5}{3}\right]_0^a\right\}$$

$$=\frac{3}{ab}\left\{\frac{b^2}{a}\times\frac{a^2}{2}-\frac{b^2}{a^2}\times\frac{1}{3}\times a^5\right\} = \frac{3}{ab}\times b^2a\times\frac{1}{6}=\frac{b}{2}$$

Consider the figure below.

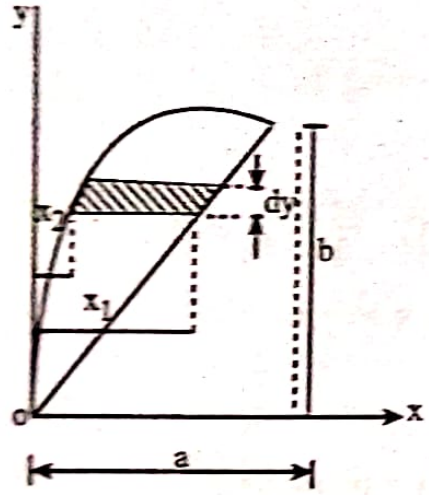


$$\bar{x}=\frac{\int x_c dA}{A}$$

$$=\frac{6}{ab}\int_0^b\left(x_2+\frac{x_1-x_2}{2}\right)(x_1-x_2)\,dy$$

$$=\frac{3}{ab}\int_0^b (x_1^2-x_2^2)\,dy$$

$$=\frac{3}{ab}\int_0^b\left(\frac{y^2}{m^2}-\frac{y^4}{k^2}\right)dy$$

$$=\frac{3}{ab}\left[\frac{1}{3}\times\frac{a^2}{b^2}[y^3]_0^b-\frac{a^2}{b^4}\times\frac{1}{5}\times[y^5]_0^b\right]$$

$$=\frac{3}{ab}\left\{\frac{a^2b^3}{3b^2}-\frac{a^2b^5}{5b^4}\right\}=\frac{3}{ab}\left\{\frac{2a^2b}{15}\right\}=\frac{2a}{5}$$



Scanned with CamScanner

**11. Determine the MOI of the given section about its centroidal axes.**

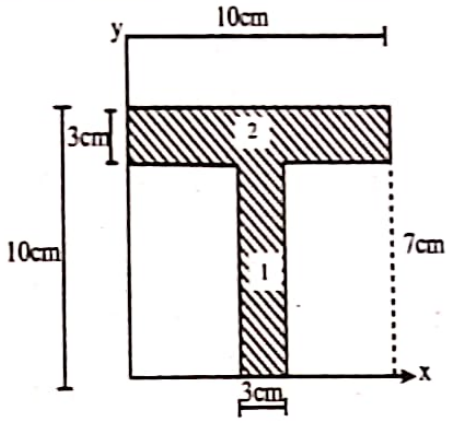


**Solution:**

| S. No. | Components | Area ($A_i$) cm$^2$ | $\bar{x}_i$ (cm) | $\bar{y}_i$ (cm) | $A_i\bar{x}_i$ (cm$^3$) | $A_i\bar{y}_i$ (cm$^3$) |
|---|---|---|---|---|---|---|
| 1. | Rectangle | $7 \times 3 = 21$ | 5 | $\frac{7}{2} = 3.5$ | 105 | 73.5 |
| 2. | Rectangle | $10 \times 3 = 30$ | 5 | $7 + \frac{3}{2} = 8.5$ | 150 | 255 |
| | | $\Sigma A_i = 51$ | | | $\Sigma A_i\bar{x}_i = 255$ | $\Sigma A_i\bar{y}_i = 328.5$ |

$$\bar{x} = \frac{\Sigma A_i\bar{x}_i}{\Sigma A_i} = \frac{255}{51} = 5\text{cm}$$

$$\bar{y} = \frac{\Sigma A_i\bar{y}_i}{\Sigma A_i} = \frac{328.5}{51} = 6.44\text{cm}$$

$\therefore$ Centroid is $(\bar{x}, \bar{y}) = (5\text{cm}, 6.44\text{cm})$

**MOI about centroidal x-axis and y-axis:**

$$(I_G)_x = \left[\frac{3 \times 7^3}{12} + 30(6.44 - 3.5)^2\right] + \left[\frac{3^3 \times 10}{12} + 21(8.5 - 6.44)^2\right]$$

$$= 456.673 \text{ cm}^4$$

$$(I_G)_y = \left[\frac{3^3 \times 7}{12} + 30(5-5)^2\right] + \left[\frac{3 \times 10^3}{12} + 21(5-5)^2\right] = 265.75 \text{ cm}^4$$



Scanned with CamScanner

**12. Determine the moment of inertia of the given composite area as shown in figure below about its centroidal x-x axis.**

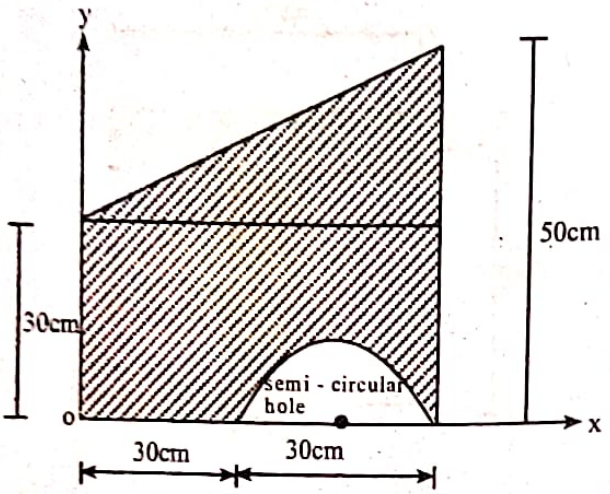


**Solution:**

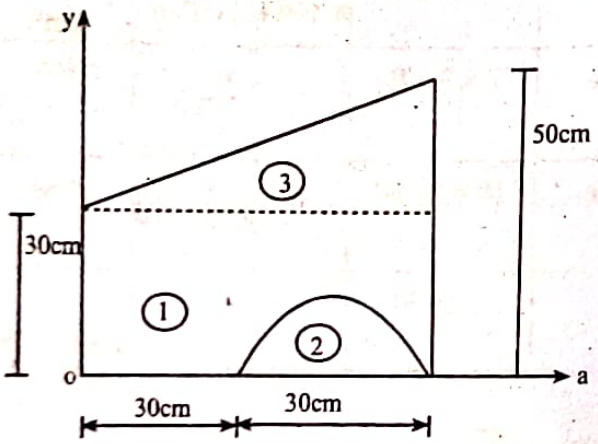


For finding MOI about centroidal x-axis, we first find CG.

| S.No. | Components | $A_i$ (cm²) | $\bar{x}_i$(cm) | $\bar{y}_i$(cm) | $A_i\bar{x}_i$(cm³) | $A_i\bar{y}_i$(cm³) |
|---|---|---|---|---|---|---|
| 1. | Rectangle | $60 \times 30$ $= 1800$ | 30 | 15 | 54000 | 27000 |
| 2. | Semicircle | $\frac{-\pi \times 30^2}{4}$ $= -706.86$ | $30+\frac{30}{2}$ $= 45$ | $\frac{4 \times 15}{3\pi}$ $= 6.36$ | -31808.7 | -4495.63 |
| 3. | Triangle | $\frac{1}{2} \times 60 \times 20$ $= 600$ | $\frac{2}{3} \times 60$ $= 40$ | $30+\frac{20}{3}$ $= 36.67$ | 24000 | 22002 |
| | | $\Sigma A_i$ $= 1693.14$ | | | $\Sigma A_i\bar{x}_i$ $= 46191.3$ | $\Sigma A_i\bar{y}_i$ $= 44506.37$ |



Scanned with CamScanner

$$\bar{x} = \frac{\Sigma A_i \bar{x}_i}{\Sigma A_i} = \frac{46191.3}{1693.14} = 27.28 \text{ cm}$$

$$\bar{y} = \frac{\Sigma A_i \bar{y}_i}{\Sigma A_i} = \frac{44506.37}{1693.14} = 26.29\text{cm}$$

$$(I_G)_x = [\frac{60 \times 30^3}{12} + 1800\,(15 - 26.29)^2] - [\frac{\pi \times 15^4}{8} + 706.86\,(6.36 - 26.29)^2] + [\frac{60 \times 20^3}{36} + 600(36.67 - 26.29)^2]$$

$$= 141766.71 \text{ cm}^4$$

**13. Find the moment of inertia about the axes through centroid of given shaded area.**

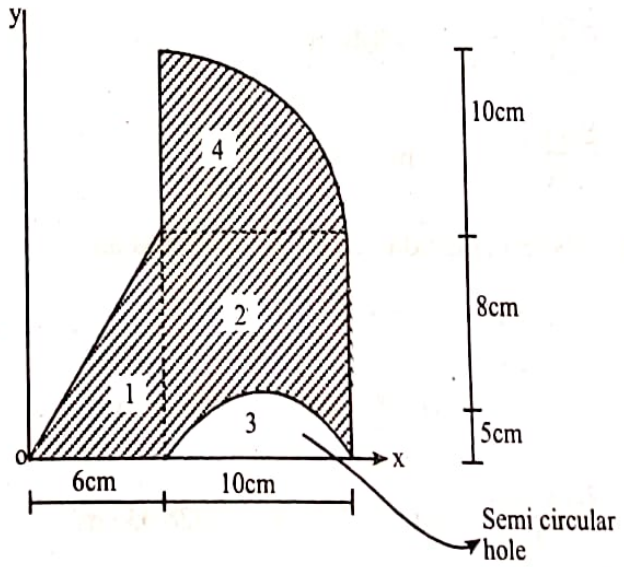


**Solution:**

| S.No. | Components | Area($A_i$) ($cm^2$) | $\bar{x}_i$ (cm) | $\bar{y}_i$ (cm) | $A_i\bar{x}_i$ ($cm^3$) | $A_i\bar{y}_i$ ($cm^3$) |
|---|---|---|---|---|---|---|
| 1. | Triangle | $\frac{1}{2} \times 6 \times 13 = 39$ | $\frac{2 \times 6}{3} = 4$ | $\frac{13}{3} = 4.33$ | 156 | 168.87 |
| 2. | Rectangle | $10 \times 13 = 130$ | $6 + \frac{10}{2} = 11$ | $\frac{13}{2} = 6.5$ | 1430 | 845 |



Scanned with CamScanner

$$(I_G)_y = \left[\frac{650 \times 400^3}{12} + 260000\,(290-200)^2\right] - \left[\frac{\pi \times 25^4}{2} + 625\pi\,(290-200)^2\right] + \left[\frac{300^3 \times 500}{36} + 75000\,(500-290)^2\right]$$

$$= 6261898762 \text{ mm}^4$$

**15. Calculate moment of inertia of given shaded composite section about centroidal y-y axis.**

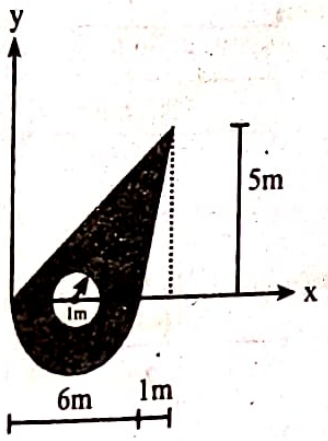


**Solution:**

| Figures | $A_i$ (m²) | $\bar{x}_i$ (m) | $A_i\bar{x}_i$ (m³) |
|---|---|---|---|
| Big triangle | $\frac{1}{2} \times 7 \times 5 = 17.5$ | $\frac{2}{3} \times 7 = 14.67$ | 81.67 |
| Small triangle | $\frac{-1}{2} \times 1 \times 5 = -2.5$ | $6 + \frac{2}{3} \times 1 = 6.67$ | -16.675 |
| Full circle | $-\pi \times 1^2 = -3.14$ | 3 | -9.42 |
| Semi-circle | $\frac{1}{8} \times \pi \times 6^2 = 14.14$ | 3 | 42.42 |
| | $\Sigma A_i = 26$ | | $\Sigma A_i\bar{x}_i = 97.995$ |

$$\bar{x}_i = \frac{\Sigma A_i\bar{x}_i}{\Sigma A_i} = 3.77\text{m}$$

$$I_y = [(I_y)_{\text{big triangle}} + A_1(\bar{x}_1 - \bar{x})^2] - [(I_y)_{\text{small triangle}} + A_2(\bar{x}_2 - \bar{x})^2] - [(I_y)_{\text{full circle}} + A_3(\bar{x}_3 - \bar{x})^2] + [(I_y)_{\text{semicircle}} + A_4(\bar{x}_4 - \bar{x})^2]$$



Scanned with CamScanner

$$= \frac{5\times7^3}{36} + 17.5\,(4.67-3.77)^2 - \left(\frac{5\times1^3}{36} + 2.5\,(6.67-3.77)^2\right) - \left(\frac{\pi\times1^4}{4} + (3.14)\,(3-3.77)^2\right) + \left(\frac{\pi\times3^3}{8} + 14.14\,(3-3-77)^2\right)$$

$$= 61.81 - 21.16 - 2.65 + 40.19 = 78.19\text{m}^4$$

**16. Determine moment of inertia about centroidal axes of the plane figure shown in below.**

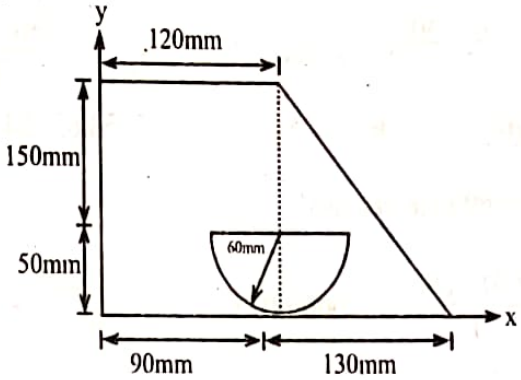


**Solution:**

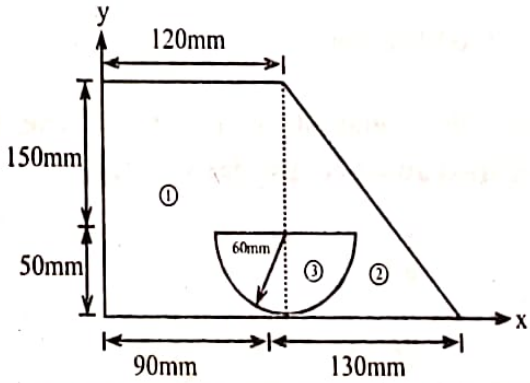


| S.N. | Figures | $\bar{x}$ (mm) | $\bar{y}_i$ (mm) | $A_i$ (mm²) | $A_i\bar{x}_i$(mm³) | $A_i\bar{y}_i$(mm³) |
|---|---|---|---|---|---|---|
| 1. | Rectangle (+) | 60 | 100 | 24000 | 1440000 | 2400000 |
| 2. | Triangle (+) | $90+\frac{1}{3}\times 130$ = 133.33 | $\frac{100}{3}$ = 66.67 | 13000 | 1733290 | 433333.33 |
| 3. | Semicircle (-) | 90 | $50-\frac{4r}{3\pi}$ = 24.54 | -5654.87 | 508938.3 | -138770.51 |
| | | | | $\Sigma A_i$ = 31345.13 | $\Sigma A_i\bar{x}_i$ = 2664351.7 | $\Sigma A_i\bar{y}_i$ = 2694562.82 |



Scanned with CamScanner

| S.No. | Components | Area($A_i$) ($cm^2$) | $\bar{x}_i$ (cm) | $\bar{y}_i$ (cm) | $A_i\bar{x}_i$ ($cm^3$) | $A_i\bar{y}_i$ ($cm^3$) |
|---|---|---|---|---|---|---|
| 3. | Simicircular hole | $\frac{-\pi \times 5^2}{2}$ = -39.27 | $6 + \frac{10}{2}$ = 11 | $\frac{4 \times 5}{3\pi}$ = 2.12 | -431.97 | -87.25 |
| 4. | Quarter circle | $\frac{\pi \times 10^2}{4}$ = 78.54 | $6+\frac{4 \times 10}{3\pi}$ = 10.24 | $13+\frac{4 \times 10}{3\pi}$ = 17.24 | 804.25 | 135.03 |
| | | $\Sigma A_i$= 208.27 | | | $\Sigma A_i\bar{x}_i$ = 1958.2 | $\Sigma A_i\bar{y}_i$ = 2284.6 |

$$\bar{x} = \frac{\Sigma A_i x_i}{\Sigma A_i} = \frac{1958.2}{208.27} = 9.40 \text{ cm}$$

$$\bar{y} = \frac{\Sigma A_i y_i}{\Sigma A_i} = 10.97 \text{ cm}$$

MOI about centroidal x-axis is calculated as

$$(I_G)_x = I_{G1} + I_{G2} - I_{G3} + I_{G4}$$

$$I_{G1} = \frac{6 \times 13^3}{36} + 39\,(10.97 - 4.33)^2 = 2085.66 \text{ cm}^4$$

$$I_{G2} = \frac{10 \times 13^3}{12} + 130\,(10.97 - 6.5)^2 = 4428.35 \text{ cm}^4$$

$$I_{G3} = 0.11 \times 5^4 + 39.27\,(10.97 - 2.12)^2 = 3144.47 \text{ cm}^4$$

$$I_{G4} = 0.055 \times 10^4 + 78.54\,(10.97 - 17.24)^2 = 3637.64 \text{ cm}^4$$

$$(I_G)_x = 2085.66 + 4428.35 - 3144.47 + 3637.64 = 7007.18 \text{ cm}^4$$

MOI about centroidal y-axis is calculated as

$$(I_G)_y = \left[\frac{6^3 \times 13}{36} + 39(9.40-4)^2\right] + \left[\frac{10^3 \times 13}{12} + 130(9.40-11)^2\right] - \left[\frac{\pi \times 5^4}{8} + 39.27(9.40-11)^2\right] + \left[0.055 \times 10^4 + 78.54(9.40-10.24)^2\right] = 2890.82 \text{ cm}^4$$



Scanned with CamScanner

**14. Find the moment of inertia about the axes through centroid of given shaded area.**

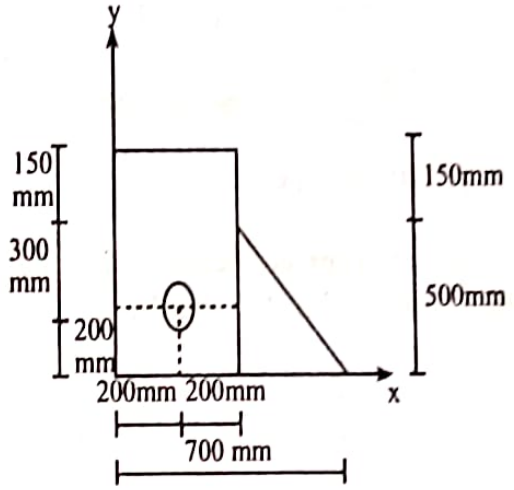


**Solution:**

| Figure | $A_i$ (mm²) | $\bar{x}_i$ (mm) | $\bar{y}_i$ (mm) | $A_i\bar{x}_i$ (mm³) | $A_i\bar{y}_i$ (mm³) |
|---|---|---|---|---|---|
| Rectangle | 400 × 650 = 260000 | 200 | 325 | 52000000 | 84500000 |
| Circle | $-\pi \times 25^2 = -625\pi$ | 200 | 200 | $-125000\pi$ | $-125000\pi$ |
| Triangle | $\frac{1}{2} \times 300 \times 500 = 75000$ | 500 | $\frac{500}{3}$ | 37500000 | 12500000 |
| | $\Sigma A_i = 333036.5046$ | | | $\Sigma A_i\bar{x}_i =$ 89107300.92 | $\Sigma A_i\bar{y}_i =$ 96607300.92 |

$$\bar{x} = \frac{\Sigma A_i\bar{x}_i}{\Sigma A_i} = 267.56 \text{ mm}, \ \bar{y} = \frac{\Sigma A_i\bar{y}_i}{\Sigma A_i} = 290.08 \text{ mm}$$

$$(I_G)_x = \left[\frac{400 \times 650^3}{12} + 160000\,(325 - 290.08)^2\right] - \left[\frac{\pi \times 25^4}{2} + 625\pi\,(200 - 290.08)^2\right] + \left[\frac{300 \times 500^3}{36} + 75000\left(\frac{500}{3} - 290.08\right)^2\right]$$

$$= 1.13073 \times 10^{10} \text{ mm}^4$$



Scanned with CamScanner

$$\bar{x} = \frac{\Sigma A_i \bar{x}_i}{\Sigma A_i} = \frac{266435.17}{31345.13} = 85\text{mm}$$

$$\bar{y} = \frac{\Sigma A_i \bar{y}_i}{\Sigma A_i} = \frac{2694562.82}{31345.13} = 85.96\text{mm}$$

$$(I_G)_x = (I_x)_1 + A_1(100 - 85.96)^2 + (I_x)_2 + A_2(66.67 - 85.96)^2 - \{(I_x)_3 + A_3(24.54 - 85.96)^2\}$$

$$= \frac{120 \times 200^3}{12} + 24000(100-85.96)^2 + \frac{130 \times 200^3}{36} + 13000 \times (66.67-85.96)^2 - \{0.11 \times 60^4 + 5654.87\,(24.54 - 85.96)^2\}$$

$$= 95699036.26 \text{ mm}^4$$

$$(I_G)_y = \frac{120^3 \times 200}{12} + 24000(60 - 85)^2 + \frac{130^3 \times 200}{36} + 13000(133.33 - 85)^2 - \left\{\frac{\pi \times 60^4}{8} + 5654.87(90-85)^2\right\}$$

$$= 81140059.41 \text{ mm}^4$$

**17. Calculate the moment of inertia of the figure below (shaded area) about centroidal x-x axis.**

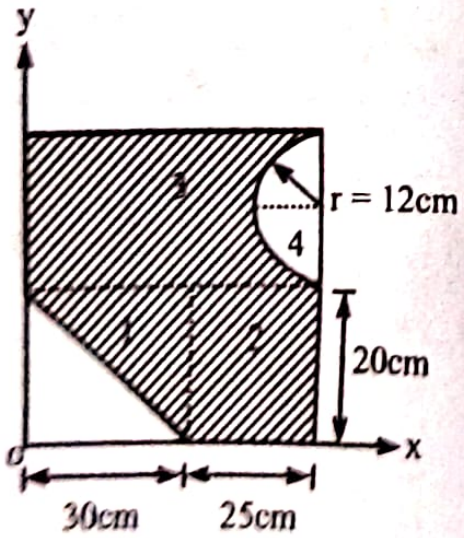




Scanned with CamScanner

**Solution:**

**Calculation of center of gravity:**

| S.N. | Components | Area ($A_i$)cm² | $\bar{x}_i$ (cm) | $\bar{y}_i$ (cm) | $A_i\bar{x}_i$(cm³) | $A_i\bar{y}_i$ (cm³) |
|---|---|---|---|---|---|---|
| 1. | Triangle (+) | $\frac{1}{2}\times30\times20$ | $\frac{2}{3}\times30=20$ | $\frac{2}{3}\times20$ =13.33 | 6000 | 4000 |
| 2. | Rectangle (+) | 25 × 20 =500 | $30+\frac{25}{2}=42.5$ | $\frac{1}{2}\times20=10$ | 21250 | 5000 |
| 3. | Rectangle (+) | 55 × 24 = 1320 | $\frac{55}{2}=27.5$ | 20+12= 32 | 36300 | 42240 |
| 4. | Semicircle (-) | $-\pi\times\frac{12^2}{2}$ = 226.19 $\Sigma A_i = 1893.81$ | $55-\frac{4\times12}{3\pi}$ = 49.91 | 20 + 12 = 32 | -11289.14 $\Sigma A_i\bar{x}_i$ = 52260.86 | -72 38.08 $\Sigma A_i\bar{y}_i$ = 44001.92 |

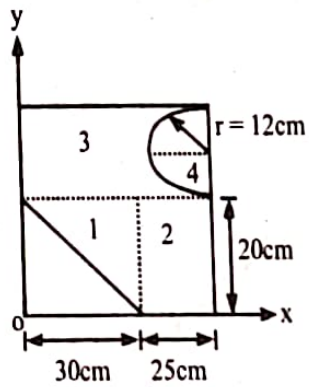


$$\bar{x} = \frac{\Sigma A_i\bar{x}_i}{\Sigma A_i} = \frac{52260.86}{1893.81} = 27.60 \text{ cm}$$

$$\bar{y} = \frac{\Sigma A_i\bar{y}_i}{\Sigma A_i} = \frac{44001.92}{1893.81} = 23.23 \text{ cm}$$

$$(I_G)_x = [(I_G)_{x1} + A_1(y_1 - \bar{y})^2] + [(I_G)_{x2} + A_2(y_2 - \bar{y})^2] + [(I_G)_{x3} + A_3(y_3 - \bar{y})^2] - [(I_G)_{x4} + A_4(y_4 - \bar{y})^2]$$

$$= \left\{\frac{30 \times 20^3}{36} + 300(13.33 - 23.23)^2\right\} + \left\{\frac{25 \times 20^3}{12} + 500(10 - 23.23)^2\right\} +$$



Scanned with CamScanner

$$\left\{\frac{55 \times 24^3}{12} + 1320\,(32 - 23.23)^2\right\} -$$

$$\left\{\frac{\pi \times 12^4}{8} + \frac{\pi \times 12^2}{2}(32 - 23.23)^2\right\}$$

$$= 279597.5\text{cm}^4$$

**18. Find the coordinate of center of gravity (CG) of the hatched area shown in figure.**

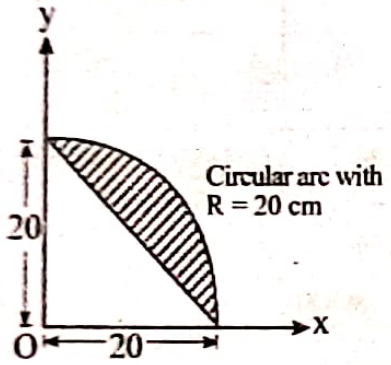


**Solution:**

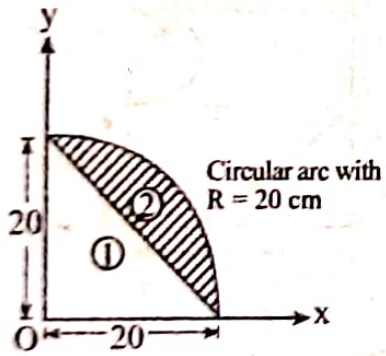


$$A_1 = \frac{1}{2} \times 20 \times 20 = 200 \text{ cm}^2,\ A_2 = \frac{\pi \times 20^2}{4} = 314.159 \text{ cm}^2$$

$$\bar{x}_1 = \frac{20}{3} = 6.6667 \text{ cm},\ \bar{y}_1 = \frac{20}{3} = 6.6667 \text{ cm},$$

$$\bar{x}_2 = \frac{4r}{3\pi} = \frac{4 \times 20}{3 \times \pi} = 8.488 \text{ cm},\ \bar{y}_2 = \frac{4r}{3\pi} = \frac{4 \times 20}{3 \times \pi} = 8.488 \text{ cm}$$

We have,

$$\bar{x} = \frac{A_2\bar{x}_2 - A_1\bar{x}_1}{A_2 - A_1} = \frac{314.159 \times 8.488 - 200 \times 6.667}{314.159 - 200} = 11.678 \text{ cm}$$

$$\bar{y} = \frac{A_2\bar{y}_2 - A_1\bar{y}_1}{A_2 - A_1} = \frac{314.159 \times 8.488 - 200 \times 6.667}{314.159 - 200} = 11.678 \text{ cm}$$

The center of gravity (CG) is $(\bar{x}, \bar{y}) = (11.678, 11.678)$ cm



Scanned with CamScanner

**19. Find the moment of inertia of area in figure about given coordinate axes using integration technique.**

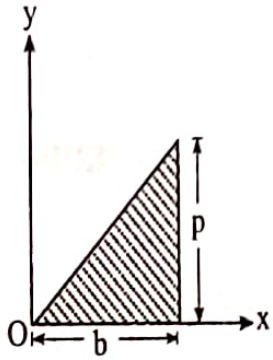


**Solution:**

When $x = b, y = p \Rightarrow y = \frac{p}{b}x$

Consider a vertical strip,

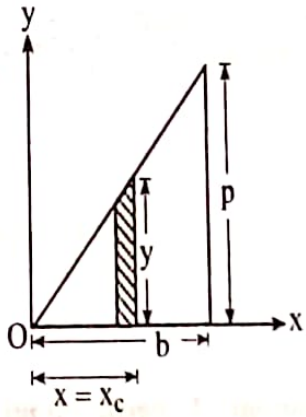


$$A = \int dA = \int_0^b y\,dx = \int_0^b \frac{p}{b}x\,dx = \frac{p}{b}\left[\frac{x^2}{2}\right]_0^b = \frac{pb}{2}$$

$$\bar{x} = \frac{\int x_c\,dA}{\int dA} = \frac{\int_0^b xy\,dx}{\frac{pb}{2}} = \frac{\frac{p}{b}\int_0^b x^2\,dx}{\frac{pb}{2}} = \frac{2b}{3}$$

$$\bar{y} = \frac{\int y_c\,dA}{\int dA} = \frac{\int_0^b \frac{y}{2}\,y\,dx}{\frac{pb}{2}} = \frac{2}{pb}\times\frac{1}{2}\int_0^b y^2\,dx = \frac{1}{pb}\int_0^b \frac{p^2}{b^2}x^2\,dx = \frac{p}{3}$$



Scanned with CamScanner

$$(I_C)_y = \left[\frac{650 \times 400^3}{12} + 260000\,(290-200)^2\right] - \left[\frac{\pi \times 25^4}{2} + 625\pi\,(290-200)^2\right] + \left[\frac{300^3 \times 500}{36} + 75000\,(500-290)^2\right]$$

$$= 6261898762 \text{ mm}^4$$

**15. Calculate moment of inertia of given shaded composite section about centroidal y-y axis.**

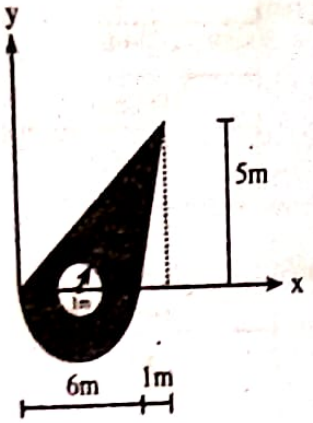


**Solution:**

| Figures | $A_i$ (m²) | $\bar{x}_i$ (m) | $A_i\bar{x}_i$ (m³) |
|---|---|---|---|
| Big triangle | $\frac{1}{2}\times7\times5 = 17.5$ | $\frac{2}{3}\times7 = 14.67$ | 81.67 |
| Small triangle | $\frac{-1}{2}\times1\times5 = -2.5$ | $6+\frac{2}{3}\times1 = 6.67$ | -16.675 |
| Full circle | $-\pi\times1^2 = -3.14$ | 3 | -9.42 |
| Semi-circle | $\frac{1}{8}\times\pi\times6^2 = 14.14$ | 3 | 42.42 |
| | $\Sigma A_i = 26$ | | $\Sigma A_i\bar{x}_i = 97.995$ |

$$\bar{x}_i = \frac{\Sigma A_i\bar{x}_i}{\Sigma A_i} = 3.77\text{m}$$

$$I_y = [(I_y)_{big\ triangle} + A_1(\bar{x}_1 - \bar{x})^2] - [(I_y)_{small\ triangle} + A_2(\bar{x}_2 - \bar{x})^2]$$
$$- [(I_y)_{full\ circle} + A_3(\bar{x}_3 - \bar{x})^2] + [(I_y)_{semicircle} + A_4(\bar{x}_4 - \bar{x})^2]$$



Scanned with CamScanner

$$= \frac{5\times7^3}{36} + 17.5\,(4.67-3.77)^2 - \left(\frac{5\times1^3}{36} + 2.5\,(6.67-3.77)^2\right) -$$

$$\left(\frac{\pi\times1^4}{4} + (3.14)\,(3-3.77)^2\right) + \left(\frac{\pi\times3^3}{8} + 14.14\,(3-3-77)^2\right)$$

$$= 61.81 - 21.16 - 2.65 + 40.19 = 78.19\text{m}^4$$

**16. Determine moment of inertia about centroidal axes of the plane figure shown in below.**

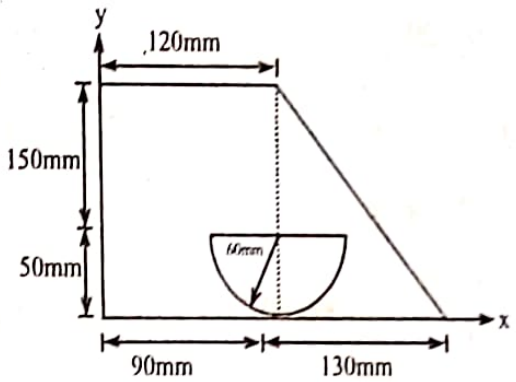


**Solution:**

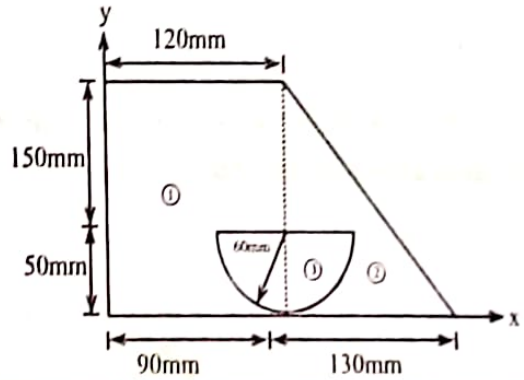


| S.N. | Figures | $\bar{x}$ (mm) | $\bar{y}_i$ (mm) | $A_i$ (mm²) | $A_i\bar{x}_i$(mm³) | $A_i\bar{y}_i$(mm³) |
|---|---|---|---|---|---|---|
| 1. | Rectangle (+) | 60 | 100 | 24000 | 1440000 | 2400000 |
| 2. | Triangle (+) | $90+\frac{1}{3}\times130$ = 133.33 | $\frac{100}{3}$ = 66.67 | 13000 | 1733290 | 433333.33 |
| 3. | Semicircle (-) | 90 | $50-\frac{4r}{3\pi}$ = 24.54 | -5654.87 | 508938.3 | -138770.51 |
| | | | | $\Sigma A_i$ = 31345.13 | $\Sigma A_i\bar{x}_i$ = 2664351.7 | $\Sigma A_i\bar{y}_i$ = 2694562.82 |



Scanned with CamScanner

Consider horizontal strip of thickness dy as shown in fig.,

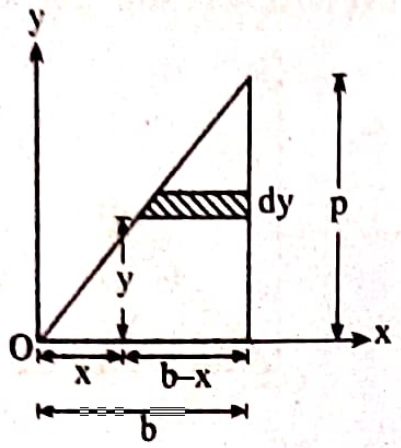


$I_x = \int y_c^2 dA$

$$= \int_0^p y^2(b-x)\,dy$$

$$= \int_0^p (by^2 - xy^2)dy = \frac{bp^3}{3} - \frac{b}{p} \times \frac{p^4}{4} = \frac{bp^3}{12}$$

$I_y = \int x_c^2 dA$

$$= \int_0^b x^2 y dx = \frac{p}{b}\int_0^b x^3 dx = \frac{p}{b} \times \frac{b^4}{4} = \frac{pb^3}{4}$$

**20. Find the moment of inertia about x and y axes, and also find polar moment of inertia w.r.t. axes.**

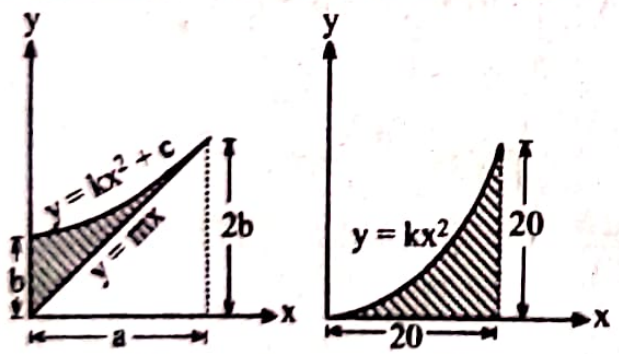


(a) (b)

**Solution:**

(a) Polar MOI about centroid, $(I_G)_p = (I_G)_x + (I_G)_y$

$y_1 = kx_1^2 + c$ ..... (i)

$y_2 = mx_2$ ..... (ii)



Scanned with CamScanner

Since equation (i) passes through (a, b) and (a, 2b),

$b = k \times 0 + c$

$\therefore c = b$

Again, $2b = ka^2 + b$

$\therefore k = \frac{b}{a^2}$

So, $y_1 = \frac{b}{a^2} x_1^2 + b$

$$x_1 = \sqrt{(y_1 - b)} \frac{a}{\sqrt{b}}$$

Since equation (ii) passes through (a, 2b),

$2b = ma$

$\therefore m = \frac{2b}{a}$

So, $y_2 = \frac{2b}{a} x_2$

$$x_2 = \frac{a}{2b} y_2$$

**Calculation of $I_y$**

Consider a vertical strip as shown.

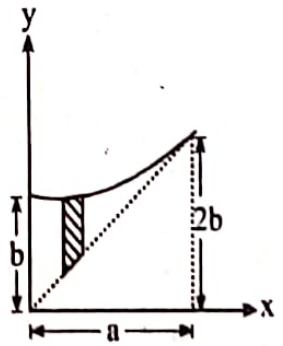


$dA = (y_1 - y_2)\, dx$

$$= \left\{\left(\frac{b}{a^2} x_1^2 + b\right) - \left(\frac{2b}{a} x_2\right)\right\} dx$$

$$= \left(\frac{b}{a^2} x^2 + b - \frac{2b}{a} x\right) dx \; [x_1 = x_2 = x]$$



Scanned with CamScanner

$$I_y = \int x^2 dA$$

$$= \int x^2 (y_1 - y_2)\, dx$$

$$= \int_0^a x^2 \left(\frac{b}{a^2}x^2 + b - \frac{2b}{a}x\right) dx$$

$$= \int_0^a \left(\frac{b}{a^2}x^4 - bx^2 - \frac{2b}{a}x^3\right) dx$$

$$= \frac{b}{a^2} \times \frac{a^5}{5} + b \times \frac{a^3}{3} - \frac{2b}{a} \times \frac{a^4}{4} = \frac{a^3b}{5} + \frac{a^3b}{3} - \frac{a^3b}{2} = \frac{a^3b}{30}$$

**Calculation of $I_x$**

Required MOI = MOI of curve – MOI of triangle

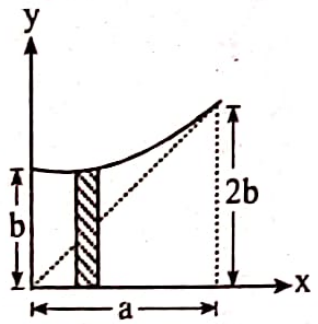


$$I_x = \int \frac{1}{3} y^3 dx - \text{MOI of } \Delta$$

$$= \int_0^a \frac{1}{3}\left(\frac{b}{a^2}x^2 + b\right)^3 dx - \frac{a(2b)^3}{12} \quad \left[\Delta\text{MOI} = \frac{bh^3}{12}\right]$$

$$= \frac{1}{3}\int_0^a \left(\frac{b^3}{a^6}x^6 + b^3 + \frac{3b^2x^4}{a^4}b + \frac{3bx^2}{a^2}b^2\right) dx - \frac{8ab^3}{12}$$

$$= \frac{1}{3}\left[\frac{b^3a^7}{7a^6} + b^3a + \frac{3b^2a^5b}{5a^4} + \frac{3b^3a^3}{3a^3}\right] - \frac{2}{3}ab^3$$

$$= \frac{1}{3}\left[\frac{ab^3}{7} + ab^3 + \frac{3ab^3}{5} + ab^3\right] - \frac{2}{3}ab^3 = \frac{26ab^3}{105}$$

Polar moment of inertia is calculated as

$$I_p = I_x + I_y$$

$$= \frac{26}{105}ab^3 + \frac{1}{30}a^3b = \frac{ab}{210}(7a^2 + 52b^2)$$



Scanned with CamScanner

Polar radius of gyration is

$$k_p = \sqrt{\frac{I_p}{A}}$$

$$= \sqrt{\frac{\frac{ab}{210}(7a^2 + 52b^2)}{\frac{1}{3}ab}} = \sqrt{\frac{7a^2 + 52b^2}{70}}$$

(b) $y = kx^2$

When $y = 20$, $x = 20$

$20 = k20^2$

or, $k = \frac{1}{20}$

$$A = \int y\,dx = \int_0^{20} kx^2\,dx = \frac{kx^3}{3} = \frac{1}{20^3} \times \frac{20}{3} = \frac{400}{3}$$

$$\bar{x} = \frac{\int x_c dA}{\int dA} = \frac{\int xydx}{\int ydx} = \frac{\int_0^{20} x(kx^2)dx}{\int_0^{20} kx^2dx} = \frac{20^4}{4} \times \frac{3}{20^3} = 15$$

$$\bar{y} = \frac{\int y_c dA}{\int dA} = \frac{1}{2}\frac{\int_0^{20}(k^2x^4)dx}{\int_0^{20} kx^2dx} = 6$$

**Calculation of $I_x$**

Taking horizontal strip,

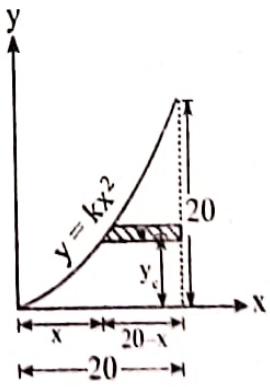




Scanned with CamScanner

$$I_x = \int y^2 dA$$

$$= \int y^2 (20 - x)\, dy$$

$$= \int_0^{20} (20y^2 - xy^2)\, dy$$

$$= \frac{20 \times 20^3}{3} - \int_0^{20} \left(\frac{y^{1/2}}{k^{1/2}}\right) y^2\, dy$$

$$= \frac{20^4}{3} - \frac{2}{7} \times 20^{7/2} \times \frac{20}{20^{1/2}} = \frac{160000}{21}$$

**Calculation of $I_y$**

Considering vertical strip,

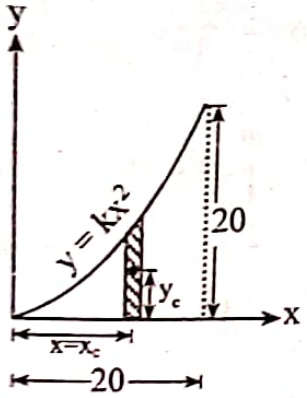


$$I_y = \int x^2\, dA$$

$$= \int x^2 y\, dx$$

$$= \int_0^{20} x^2 kx^2 dx = k\int_0^{20} x^4 dx = \frac{1}{20} \times \frac{20^4}{5} = 32000$$

MOI about centroidal x-axis is calculated as

$$I_x = (I_C)_x + A(\bar{y})^2$$

$$\text{or, } \frac{160000}{21} = (I_C)_x + \frac{400}{3} \times (6)^2$$

$$\therefore \quad (I_C)_x = \frac{59200}{21}$$

MOI about centroidal y-axis is calculated as

$$I_y = (I_C)_y + A(\bar{x})^2$$



Scanned with CamScanner

or, $32000 = (I_G)_y + \frac{400}{3} \times (15)^2$

$\therefore (I_G)_y = 2000$

**21. Find the moment of inertia about x and y axes.**

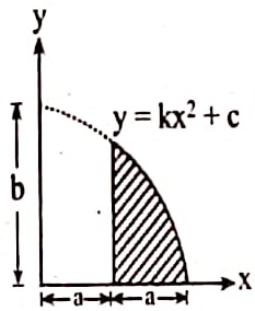


**Solution:**

$y = kx^2 + c$

At $x = 0, y = b$

So, $b = k \times 0 + c$

$\therefore c = b$

At $x = 2a, y = 0$

So, $0 = k(2a)^2 + c$

or, $0 = 4a^2k + b$

$\therefore k = \frac{-b}{4a^2}$

Now,

$$y = \frac{b}{4a^2}(4a^2 - x^2)$$

$$dI_x = \frac{1}{3}y^3dx = \frac{1}{3}\frac{b^3}{64a^6}(4a^2 - x^2)^3\,dx$$

$$I_x = \int dI_x = \frac{1}{3}\frac{b^3}{64a^6}\int_a^{2a}(4a^2 - x^2)^3dx$$

$$= \frac{b^3}{192a^6}\int_0^{20}(64a^6 - 48a^4x^2 + 12a^2x^4 - x^6)dx$$

$$= \frac{b^3}{192a^6}\left[64a^2x - 16a^4x^3 + \frac{12}{5}a^2x^5 - \frac{x^7}{7}\right]_a^{2a}$$



Scanned with CamScanner

$$= \frac{ab^3}{192}\left[64 - 112 + \frac{372}{5} - \frac{127}{7}\right] = 0.043ab^3$$

$I_y = \int x^2 dA$

$$dA = ydx = \frac{b}{4a^2}(4a^2 - x^2)dx$$

$$\therefore I_y = \int_a^{2a} x^2 dA = \frac{b}{4a^2}\int_a^{2a} x^2(4a^2 - x^2)dx = \frac{b}{4a^2}\left[4a^2\frac{x^3}{3} - \frac{x^5}{5}\right]_a^{2a}$$

$$= \frac{b}{3}(8a^3 - a^3) - \frac{b}{20a^2}(32a^5 - a^5) = \frac{47}{60}a^3b$$

**22. Locate the centroid of shaded area figure with respect coordinate.**

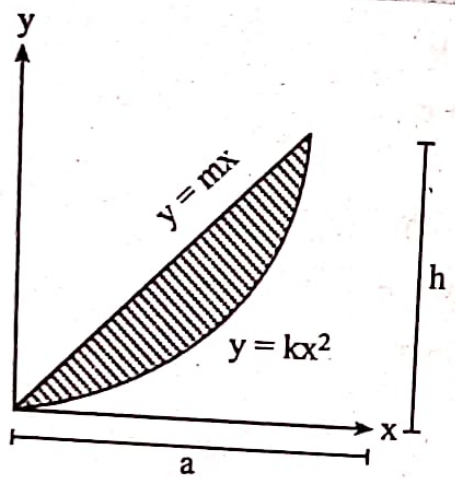


**[2019 Fall, Pol**

**Solution:**

$y_1 = mx_1$ & $y_2 = kx_2^2$

Here,

$y = mx$ & $y = kx^2$

or, $m = \frac{y}{x}$ & $y = kx^2$

or, $m = \frac{h}{a}$ & $k = \frac{h}{a^2}$

Area (A) $= \int dA = \int (y_1 - y_2)\, dx$

$$= \int_0^a (mx - kx^2)\, dx$$



Scanned with CamScanner

$$= \int_0^a \left(\frac{h}{a}x - \frac{h}{a^2}x^2\right) dx$$

$$= \frac{h}{a}\int_0^a x dx - \frac{h}{a^2}\int_0^a x^2 dx$$

$$= \frac{h}{a}\left[\frac{x^2}{2}\right]_0^a - \frac{h}{a^2}\left[\frac{x^3}{3}\right]_0^a = \frac{ah}{6}$$

For $\overline{x}$, consider vertical strip and for $\overline{y}$, consider horizontal strip.

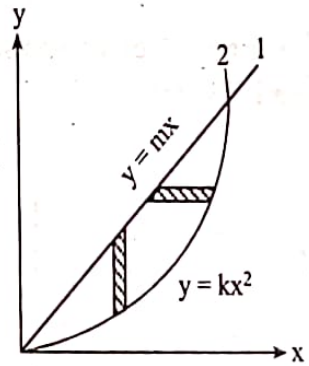


$$\overline{x} = \frac{1}{A}\int x_c dA$$

$$= \frac{6}{ah}\int x(y_1 - y_2)\, dx$$

$$= \frac{6}{ah}\int_0^a x(mx - kx^2)\, dx$$

$$= \frac{6}{ah}\int_0^a x\left[\frac{h}{a}x - \frac{h}{a^2}x^2\right] dx$$

$$= \frac{6}{ah}\int_0^a x^2 \times \frac{h}{a} dx - \frac{6}{ah}\int_0^a \frac{h}{a^2}x^3 dx$$

$$= \frac{6}{a^2}\left[\frac{x^3}{3}\right]_0^a - \frac{6}{a^3}\left[\frac{x^4}{4}\right]_0^a = \frac{a}{2}$$

Calculation of $\overline{y}$ from horizontal strip,

$$\overline{y} = \frac{1}{A}\int y_c dA$$



Scanned with CamScanner

$$= \frac{6}{ah}\int y\,(x_2 - x_1)\,dy$$

$$= \frac{6}{ah}\int_0^h y\left(\frac{a}{\sqrt{h}}\sqrt{y} - \frac{a}{h}y\right)dy$$

$$= \frac{6}{ah}\int_0^h \frac{a}{\sqrt{h}}y^{3/2}\,dy - \frac{6}{ah}\frac{a}{h}\int_0^h y^2\,dy$$

$$= \frac{2h}{5}$$

**23. Calculate the moment of inertia of the shaded composit area as shown in figure.**

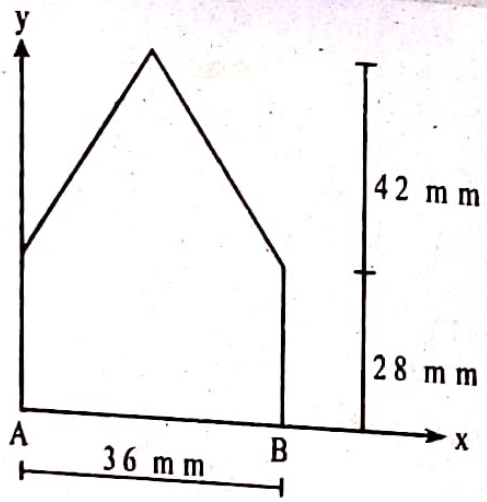


**Solution:** [2019 Fall, PoU

Let's divide the figure into three parts:

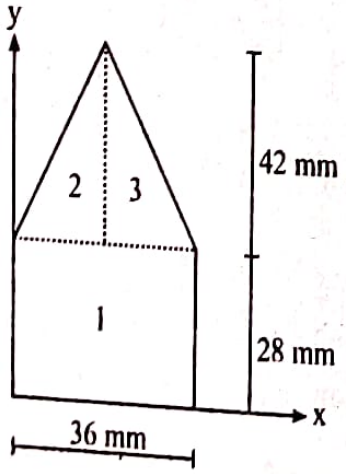




Scanned with CamScanner

| Figure | Area ($mm^2$) | $\bar{x}$ (mm) | $\bar{y}$ (mm) |
|---|---|---|---|
| Rectangle (1) | $36 \times 28 = 1008$ | $\frac{36}{2} = 18$ | $\frac{28}{2} = 14$ |
| Triangle (2) | $\frac{1}{2} \times 18 \times 42 = 378$ | $\frac{2}{3} \times 18 = 12$ | $\left(\frac{1}{3} \times 42 + 28\right) = 42$ |
| Triangle (3) | $\frac{1}{2} \times 18 \times 42 = 378$ | $\left(\frac{1}{3} \times 18\right) + 18 = 24$ | $\left(\frac{1}{3} \times 42\right) + 28 = 42$ |

$$\bar{x} = \frac{A_1x_1 + A_2x_2 + A_3x_3}{A_1 + A_2 + A_3}$$

$$= \frac{(1008 \times 18) + (378 \times 12) + (378 \times 24)}{1008 + 378 + 378} = 18 \text{ mm}$$

$$\bar{y} = \frac{A_1y_1 + A_2y_2 + A_3y_3}{A_1 + A_2 + A_3}$$

$$= \frac{(1008 \times 14) + (378 \times 42) + (378 \times 42)}{1008 + 378 + 378} = 26 \text{ mm}$$

**Calculation of moment of inertia**

$$I_x = I_{x1} + I_{x2} + I_{x3}$$

$$= [(I_G)_x + A_1(y_1 - \bar{y})^2] + [(I_G)_x + A_2(y_2 - \bar{y})^2] + [(I_G)_x + A_3 (y_3 - \bar{y})^2]$$

$$= \left[\frac{36 \times 28^3}{12} + 1008\,(14 - 26)^2\right] + \left[\frac{18 \times 42^3}{36} + 378\,(14 - 26)^2\right] + \left[\frac{18 \times 42^3}{36} + 378\,(42 - 26)^2\right]$$

$$= 436296 \text{ mm}^4$$

$$I_y = I_{y1} + I_{y2} + I_{y3}$$

$$= [(I_G)_y + A_1(x_1 - \bar{x})^2] + [(I_G)_y + A_2(x_2 - \bar{x})^2] + [(I_G)_y + A_3 (x_3 - \bar{x})^2]$$

$$= \left[\frac{28 \times 36^3}{12} + 1008\,(18 - 18)^2\right] + \left[\frac{42 \times 18^3}{36} + 378\,(12 - 18)^2\right] + \left[\frac{42 \times 18^3}{36} + 378\,(24 - 18)^2\right]$$

$$= 149688 \text{ mm}^4$$



Scanned with CamScanner

**24. Find the centroid of shaded area by method of integration**

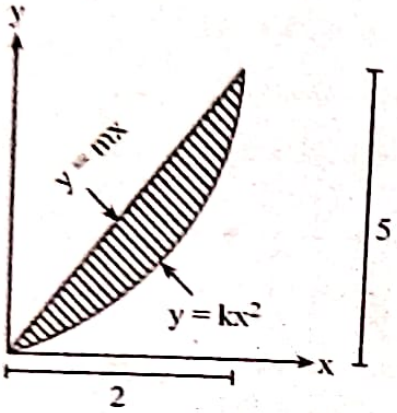


**[2016 Fall, PoU]**

**Solution:**

$y_1 = mx_1$ & $y_2 = kx_2^2$

$5 = m \times 2$ & $5 = k(2)^2$

$\Rightarrow \quad m = \frac{5}{2}$ & $\Rightarrow k = \frac{5}{4}$

$$\text{Area (A)} = \int dA = \int (y_1 - y_2)\, dx$$

$$= \int_0^2 (mx - kx^2)\, dx$$

$$= \int_0^2 \frac{5}{2} x\, dx - \frac{5}{4}\int_0^2 x^2\, dx$$

$$= \frac{5}{2}\left[\frac{x^2}{2}\right]_0^2 - \frac{5}{4}\left[\frac{x^3}{3}\right]_0^2 = \frac{5}{2} \times \frac{4}{2} - \frac{5}{4} \times \frac{2^3}{3} = 1.67$$

For $\bar{x}$, consider vertical strip,

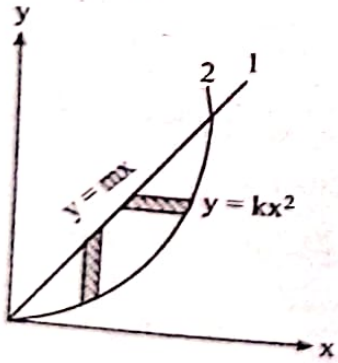




Scanned with CamScanner

$$\bar{x} = \frac{1}{A}\int x_c \, dA$$

$$= \frac{1}{1.67}\int x\,(y_1 - y_2)\,dx$$

$$= \frac{1}{1.67}\int_0^2 x\,(mx - kx^2)\,dx$$

$$= \frac{1}{1.67} \times \frac{5}{2}\int_0^2 x^2\,dx - \frac{1}{1.67} \times \frac{5}{4}\int_0^2 x^3\,dx = 1$$

For $\bar{y}$, consider horizontal strip,

$$\bar{y} = \frac{1}{A}\int y_c \, dA$$

$$= \frac{1}{1.67}\int_0^5 y\,(x_2 - x_1)\,dy$$

$$= \frac{1}{1.67}\int_0^5 y\left[\frac{\sqrt{y}}{\sqrt{k}} - \frac{y}{m}\right]dy$$

$$= \frac{1}{1.67} \times \frac{1}{\sqrt{5/4}} \times \int_0^5 y^{3/2}\,dy - \frac{1}{1.67} \times \frac{2}{5}\int_0^5 y^2\,dy = 2$$

**25. Locate the centroid of the shaded area as shown in figure below:**

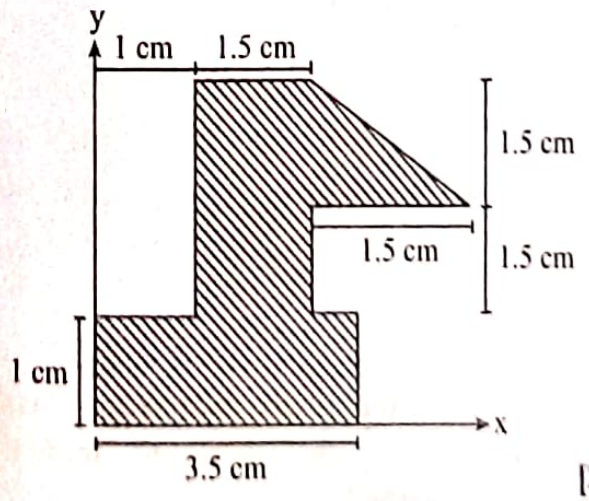


[2017 Fall, PoU]



Scanned with CamScanner

**Solution:**

The figure can be divided as:

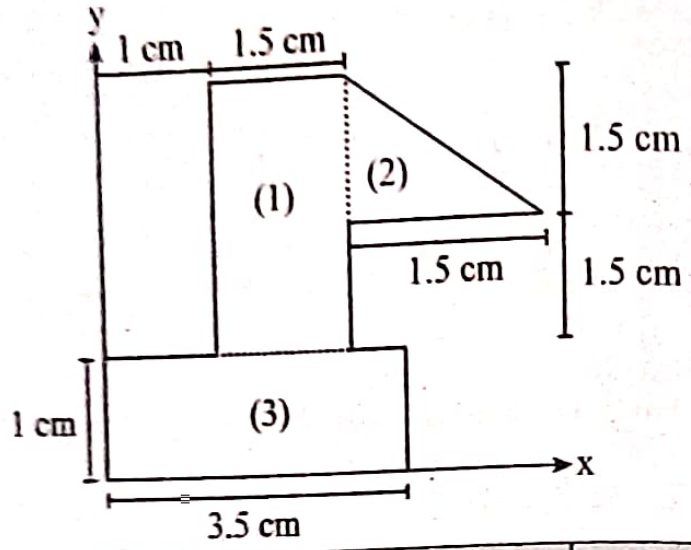


| Figure | Area ($cm^2$) | $\bar{x}$ (cm) | $\bar{y}$ (cm) |
|---|---|---|---|
| Rectangle (1) | $1.5 \times 3 = 4.5$ | $\frac{1.5}{2} + 1 = 1.75$ | $\frac{3}{2} + 1 = 2.5$ |
| Triangle (2) | $\frac{1}{2} \times 1.5 \times 1.5 =$ 1.125 | $\frac{1}{3} \times 1.5 + (2.5)$ $= 3$ | $\frac{1}{3} \times (1.5) +$ $(2.5) = 3$ |
| Rectangle (3) | $3.5 \times 1 = 3.5$ | $3.5/2 = 1.75$ | $1/2 = 0.5$ |

$$\bar{x} = \frac{A_1x_1 + A_2x_2 + A_3x_3}{A_1 + A_2 + A_3}$$

$$= \frac{(4.5 \times 1.75) + (1.125 \times 3) + (3.5 \times 1.75)}{(4.5 + 1.125 + 3.5)}$$

$$= 1.9 \text{ cm}$$

$$\bar{y} = \frac{A_1y_1 + A_2y_2 + A_3y_3}{A_1 + A_2 + A_3}$$

$$= \frac{(4.5 \times 2.5) + (1.125 \times 3) + (3.5 \times 0.5)}{(4.5 + 1.125 + 3.5)}$$

$$= 1.79 \text{ cm}$$

**26. Determine the moment of inertia about x and y axes for the given area bounded by the curve and straight line by direct integration method.**



Scanned with CamScanner

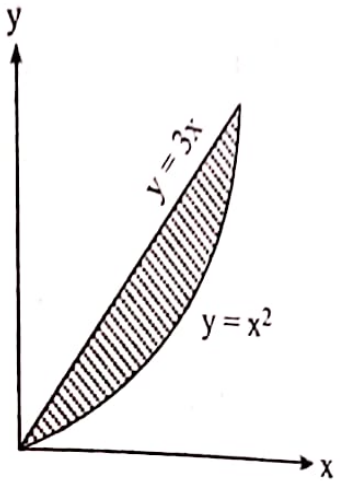


[2017, 2015 Fall, PoU]

**Solution:**

$y = 3x$ .....(i)

$y = x^2$ .....(ii)

or, $x^2 - 3x = 0$

$\Rightarrow$ $x = 0$ & $x = 3$

$y = 0$ & $y = 9$

Now,

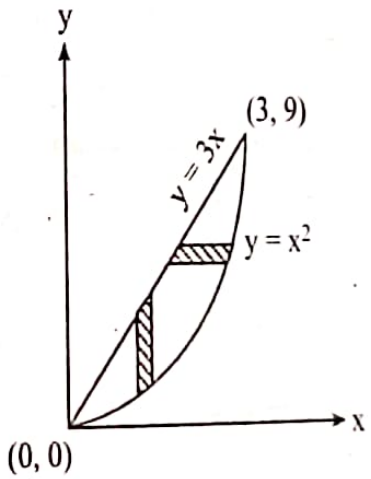


Considering horizontal strip,

$$I_x = \int y^2 \, dA$$

$$= \int y^2 (x_1 - x_2) \, dy$$

$$= \int_0^9 y^2 \left(\sqrt{y} - \frac{y}{3}\right) dy$$

$$= \int_0^9 y^{5/2} \, dy - \frac{1}{3} \int_0^9 y^3 \, dy$$



Scanned with CamScanner

$$= \frac{2}{7} \times [y^{7/2}]_0^9 - \frac{1}{3 \times 4}[y^4]_0^9 = 78.1$$

Considering vertical strip,

$I_x = \int x^2 \, dA$

$$= \int_0^3 x^2 (y_2 - y_1) \, dx$$

$$= \int_0^3 x^2 (3x - x^2) \, dx = 12.15$$

**27. Locate the centroid of given shaded area by direct integration method.**

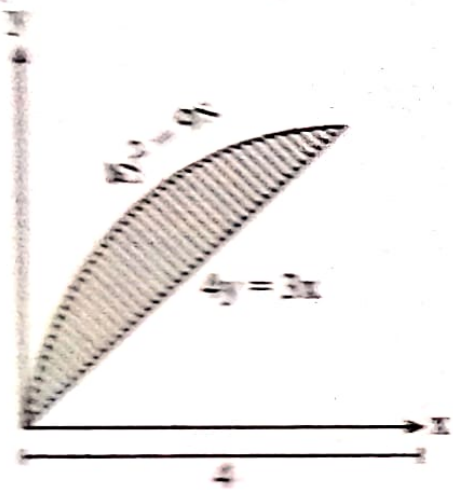


**[2018, 2014 Fall, PoU]**

**Solution:**

Let, $4y_1^2 = 9x_1$, $4y_2 = 3x$

or, $y_1 = \frac{3}{2}\sqrt{x_1}$ or, $y_2 = \frac{3}{4}x$

Now, $x = 4$

So, $4 \times y = 3 \times 4$

or, $y = 3$

Area (A) = $\int dA = \int (y_1 - y_2) \, dx$

$$= \int_0^4 \left( \sqrt{\frac{9}{4}x} - \frac{3}{4}x \right) dx$$

$$= \frac{3}{2}\int_0^4 \sqrt{x} \, dx - \frac{3}{4}\int_0^4 x \, dx$$



Scanned with CamScanner

$$= \frac{3}{2}\left[\frac{x^{3/2}}{(3/2)}\right]_0^4 - \frac{3}{4}\left[\frac{x^2}{2}\right]_0^4 = 2$$

For $\overline{x}$, consider vertical strip and for $\overline{y}$, consider horizontal strip.

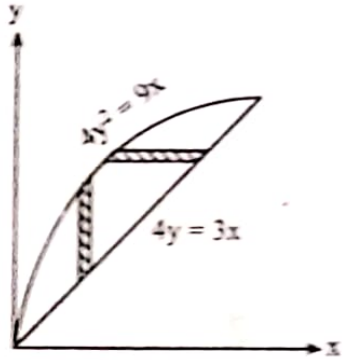


$$\overline{x} = \frac{1}{A}\int x_c \, dA$$

$$= \frac{1}{A}\int x\,(y_1 - y_2)\,dx$$

$$= \frac{1}{2}\int_0^4 x\,(3/2\,x^{1/2} - 3/4x)\,dx$$

$$= \frac{1}{2}\left[\frac{3}{2}\int_0^4 x^{3/2}\,dx - \frac{3}{4}\int_0^4 x^2\,dx\right]$$

$$= \frac{1}{2}\left[\frac{3}{2}\left(\frac{[x]^{5/2}}{5/2}\right)_0^4 - \frac{3}{4}\left[\frac{x^3}{3}\right]_0^4\right] = 1.6$$

$$\overline{y} = \frac{1}{A}\int y_c \, dA$$

$$= \frac{1}{A}\int y\,(x_2 - x_1)\,dy$$

$$= \frac{1}{2}\int_0^3 y\left(\frac{4y}{3} - \frac{4y^2}{9}\right)dy$$

$$= \frac{1}{2}\left[\frac{4}{3}\int_0^3 y^2\,dy - \frac{4}{9}\int_0^3 y^3 dy\right]$$



Scanned with CamScanner

$$= \frac{1}{2}\left[\frac{4}{3}\left[\frac{x^3}{3}\right]_0^3 - \frac{4}{9}\left(\frac{x^4}{4}\right)_0^3\right]$$

$$= 1.5$$

**28. Find the centroid of shaded area.**

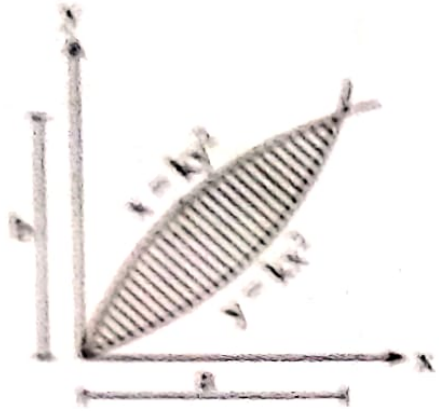


**Solution:**

Here, $x_1 = ky_1^2$ ..... (i)

And, $a = kb^2 \Rightarrow k = \frac{a}{b^2}$

Again, $y_2 = kx_2^2$ ..... (ii)

or, $b = ka^2 \Rightarrow k = \frac{b}{a^2}$

Eq (i) becomes $x_1 = \frac{a}{b^2} y_1^2 \Rightarrow y_1 = \frac{b}{\sqrt{a}} x_1$

Eq. (ii) becomes $y_2 = \frac{b}{a^2} x_2^2 \Rightarrow x_2 = \frac{a}{\sqrt{b}} \sqrt{y_2}$

$$\text{Area } (A) = \int dA = \int_0^a (y_1 - y_2)\, dx$$

$$= \int_0^a \left(\frac{b}{\sqrt{a}}\sqrt{x} - \frac{b}{a^2} x_2^2\right) dx$$

$$= \frac{b}{a^{1/2}} \frac{a^{3/2}}{(3/2)} - \frac{b}{a^2}\frac{a^3}{3}$$

$$= \frac{2ab}{3} - \frac{ab}{3} = \frac{ab}{3}$$



Scanned with CamScanner

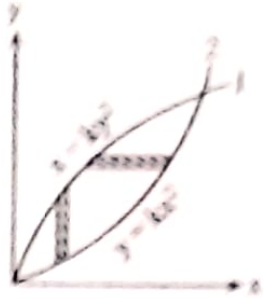

$$\bar{x} = \frac{1}{A}\int x_c \, dA$$

$$= \frac{1}{A}\int x(y_1 - y_2)\, dx$$

$$= \frac{3}{ab}\int_0^a x\left[\frac{b}{\sqrt{a}}\sqrt{x} - \frac{b}{a^2}x^2\right] dx$$

$$= \frac{3}{ab}\left[\frac{b}{\sqrt{a}}\int_0^a x^{3/2}\, dx - \frac{b}{a^2}\int_0^a x^3\, dx\right]$$

$$= \frac{3}{ab}\left[\frac{b}{\sqrt{a}}\frac{a^{5/2}}{(5/2)} - \frac{b}{a^2}\frac{a^4}{4}\right] = \frac{9a}{20}$$

$$\bar{y} = \frac{1}{A}\int y_c \, dA$$

$$= \frac{3}{ab}\int_0^b y\,(x_2 - x_1)\, dy$$

$$= \frac{3}{ab}\int_0^b y\left[\frac{a}{\sqrt{b}}\sqrt{y} - \frac{a}{b^2}y^2\right] dy$$

$$= \frac{3}{ab}\left[\int_0^b \frac{a}{\sqrt{b}}y^{3/2}\, dy - \frac{a}{b^2}\int_0^b y^3\, dy\right]$$

$$= \frac{3}{ab}\left[\frac{a}{\sqrt{b}}\left(\frac{y^{5/2}}{(5/2)}\right)_0^b - \frac{a}{b^2}\left(\frac{y^4}{4}\right)_0^b\right]$$

$$= \frac{9b}{20}$$



Scanned with CamScanner

29. Calculate the centroid of the given shaded area with respect to x and y-axis

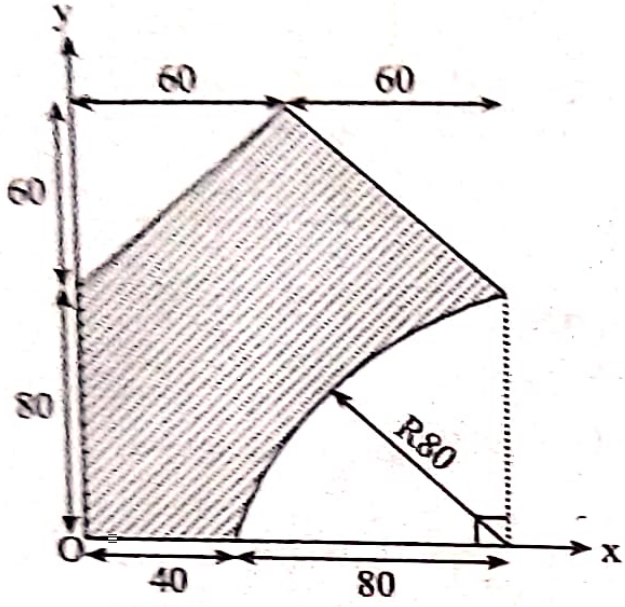


[2020 Spring PoU]

**Solution:**

The given can be divided as:

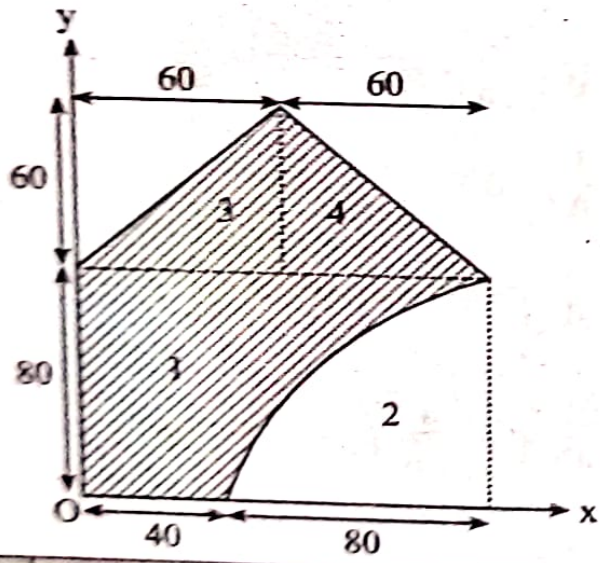


| Figure | Area (mm²) | $\bar{x}$ (mm) | $\bar{y}$ (mm) |
|---|---|---|---|
| Rectangle (1) | $120 \times 80 = 9600$ | $\frac{120}{2} = 60$ | $\frac{80}{2} = 40$ |
| Quarter circle (2) | $\frac{\pi R^2}{4} = \frac{\pi(80)^2}{4}$ $= 5024$ | $120 - \frac{4 \times 80}{3\pi}$ $= 86.05$ | $\frac{4 \times 80}{3\pi} = 33.97$ |



Scanned with CamScanner

| Figure | Area (mm²) | $\bar{x}$ (mm) | $\bar{y}$ (mm) |
|---|---|---|---|
| Triangle (3) | $\frac{1}{2} \times 60 \times 60$ = 1800 | $\frac{2}{3} \times 60 = 40$ | $\left(\frac{1}{3} \times 60\right) + 80$ = 100 |
| Triangle (4) | $\frac{1}{2} \times 60 \times 60$ = 1800 | $\left(\frac{1}{3} \times 60\right) + 60$ = 80 | $\left(\frac{1}{3} \times 60\right) + 80$ = 100 |

$$\bar{x} = \frac{A_1x_1 - A_2x_2 + A_3x_3 + A_4x_4}{A_1 - A_2 + A_3 + A_4}$$

$$= \frac{(9600 \times 60) - (5024 \times 86.05) + (1800 \times 40) + (1800 \times 80)}{(9600 - 5024 + 1800 + 1800)}$$

$$= 43.98 \text{ mm}$$

$$\bar{y} = \frac{A_1y_1 - A_2y_2 + A_3y_3 + A_4y_4}{A_1 - A_2 + A_3 + A_4}$$

$$= \frac{(9600\times40) - (5024\times33.97) + (1800\times100) + (1800\times100)}{(9600 - 5024 + 1800 + 1800)}$$

$$= 70.49 \text{ mm}$$

**30. Find the centroid of the shaded area in figure shown below:**

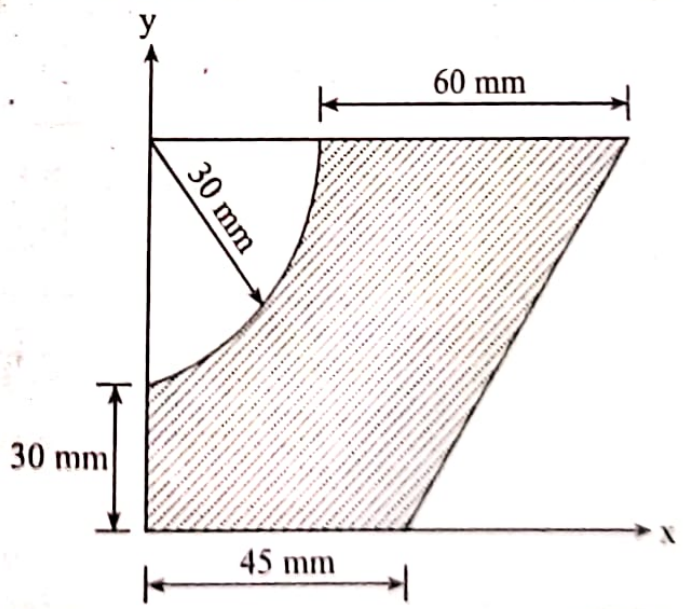


[2019 Spring, PoU]



Scanned with CamScanner

**Solution:**

The figure can be divided into:

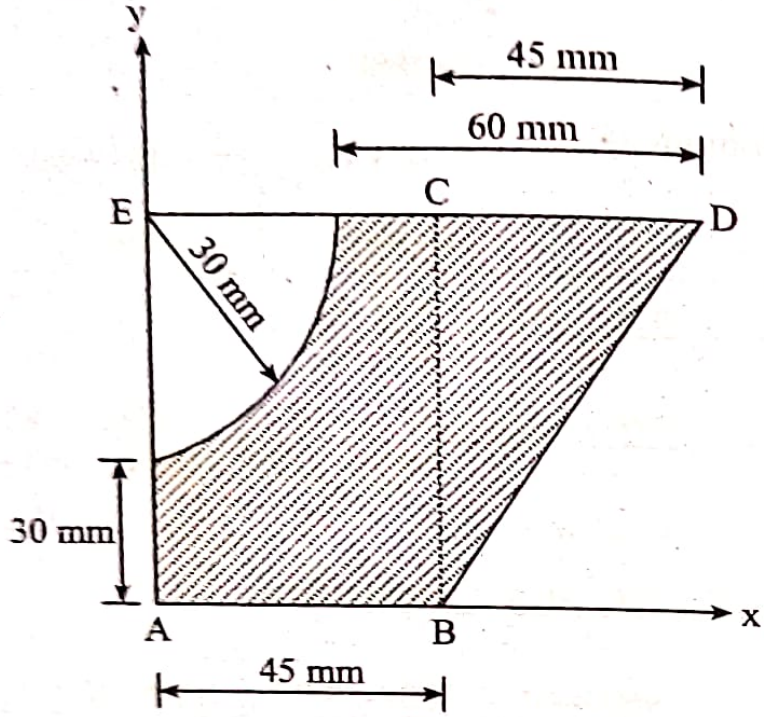


Rectangle ABCE (1)

Triangle ΔBCD (2)

Quarter circle (3)

| Figure | Area (mm²) | $\bar{x}$ (mm) | $\bar{y}$ (mm) |
|---|---|---|---|
| Rectangle ABCE | $45 \times 60 = 2700$ | $\frac{45}{2} = 22.5$ | $\frac{60}{2} = 30$ |
| Triangle BCD | $\frac{1}{2} \times 45 \times 60$ $= 1350$ | $\left(\frac{1}{3} \times 45\right) + 45$ $= 60$ | $\frac{2}{3} \times 60 = 40$ |
| Quarter circle | $\frac{\pi(30)^2}{4} = 706.5$ | $\frac{4 \times (30)}{3\pi}$ $= 12.73$ | $\frac{4 \times (30)}{3\pi} + 30$ $= 42.73$ |

$$\bar{x} = \frac{A_1x_1 + A_2x_2 + A_3x_3}{A_1 + A_2 + A_3}$$

$$= \frac{(2700 \times 22.5) + (1350 \times 60) + (706.5 \times 12.73)}{(2700 + 1350 + 706.5)}$$

$$= 31.69 \text{ mm}$$



Scanned with CamScanner

$$\bar{y} = \frac{A_1y_1 + A_2y_2 + A_3y_3}{A_1 + A_2 + A_3}$$

$$= \frac{(2700 \times 30) + (1350 \times 40) + (706.5 \times 42.75)}{(2700 + 1350 + 706.5)}$$

$$= 34.73 \text{ mm}$$

**31. Determine the centroid of shaded area with respect to given x and y**

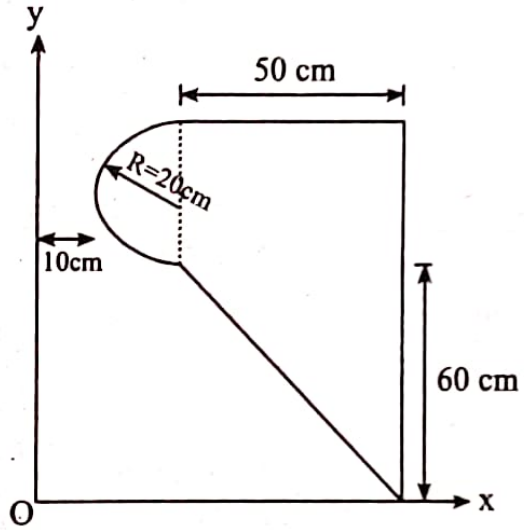


**[2020 Fall, PoU]**

**Solution:**

The figure can be divided as:

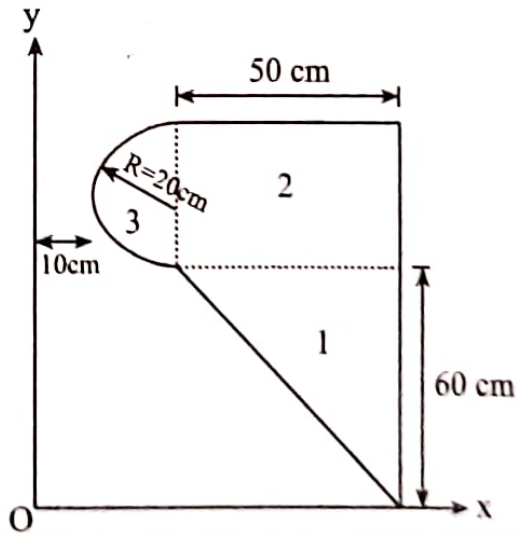


| Figure | Areas (cm²) | $\bar{x}$ (cm) | $\bar{y}$ (cm) |
|---|---|---|---|
| Triangle (1) | $\frac{1}{2} \times 50 \times 60$ = 1500 | $\left(\frac{2}{3} \times 50\right) + 30$ = 63.33 | $\frac{2}{3} \times 60 = 40$ |



Scanned with CamScanner

| Figure | Areas ($cm^2$) | $\bar{x}$ (cm) | $\bar{y}$ (cm) |
|---|---|---|---|
| Rectangle (2) | $50 \times 40 = 2000$ | $\left(\frac{50}{2}\right) + 30 = 55$ | $\left(\frac{40}{2}\right) + 60 = 80$ |
| Semicircle (3) | $\frac{\pi(20)^2}{2} = 628$ | $\left[20 - \frac{4R}{3\pi}\right] + 10$ <br> $= 30 - \frac{4 \times 20}{3 \times \pi}$ <br> $= 21.51$ | $20 + 60 = 80$ |

$$\bar{x} = \frac{A_1x_1 + A_2x_2 + A_3x_3}{A_1 + A_2 + A_3}$$

$$= \frac{(1500 \times 63.33) + (2000 \times 55) + 1628 \times 21.54}{(1500 + 2000 + 628)}$$

$$= 52.93 \text{ cm}$$

$$\bar{y} = \frac{A_1y_1 + A_2y_2 + A_3y_3}{A_1 + A_2 + A_3}$$

$$= \frac{(1500 \times 40) + (2000 \times 80) + (628 \times 80)}{(1500 + 2000 + 628)}$$

$$= 65.46 \text{ cm}$$



Scanned with CamScanner

CHAPTER - 5

# FRICTION

## 5.1 Friction

When a body slides over another body, a force is exerted at a surface of contact by the stationary body on a moving body. This resisting force is called the *force of friction* and acts in the direction opposite to the direction of motion.

**Characteristic of friction:**

i. It always acts in a direction opposite to that in which motion is intended.

ii. It exists as along as the tractive force acts. So, it is passive force.

iii. It is self-adjusting force i.e., only that much comes to play as is just sufficient to prevent motion.

### 5.1.1 Static and Dynamic Friction

**Static Friction**

The frictional force that develops between mating surfaces when subjected to external force but there is no relative motion between them is called *static friction*.

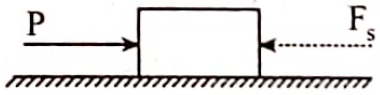


If force P acts towards right, then $F_s$ equal to P acts in opposite direction to prevent motion. This force $F_s$ is static friction.

**Dynamic Friction**

The frictional force that develops between mating surfaces when subjected to external forces and there is relative motion between them is called *dynamic friction* (also known as *kinetic friction*).

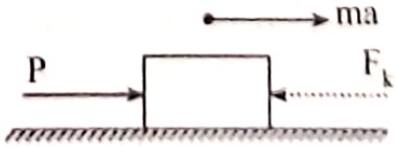




Scanned with CamScanner

If force P acts towards right, then $F_k$ less than P acts in opposite direction and the body moves with acceleration a.

### 5.1.2 Laws of Solid Friction (Static or Dynamic)

Based on the experiment, following laws of friction have been stated:

i. Friction acts tangential to the surface in contact and is in a direction opposite to that in which motion is to take place.

ii. Frictional force is maximum at the instant of impending motion.

iii. The magnitude of limiting friction bears a constant ratio to the normal reaction between the mating surfaces. This ratio drops to a slightly lower value when motion starts.

iv. Limiting friction is independent of the area and shape of contact surface.

v. Limiting friction depends upon the nature of the surface in contact.

vi. At low velocity, friction is independent of the velocity. But at higher speed, there will be slight reduction in friction.

### 5.1.3 Advantages and Disadvantages of Friction

**Advantages:**

i. We can easily walk on road due to good friction which is too difficult to do on ice due to poor friction.

ii. Friction helps to transmit power from the motors and engine to other machines by making use of belts and clutches.

iii. Brakes make use of friction to stop vehicles.

iv. A nail can be easily fixed on the wall due to friction.

**Disadvantages:**

i. Friction causes unnecessary wear and tear of the machinery parts.

ii. Friction causes heat to develop within the machinery which in fact reduces the life of machine.



Scanned with CamScanner

iii. Efficiency of a machine is decreased due to friction. A part of useful energy is dissipated in overcoming the friction.

## 5.2 Some Terminologies

### Coefficient of Friction: Static and Dynamic

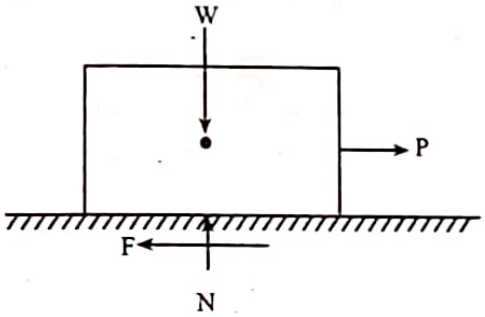


The frictional force is proportional to normal reaction i.e., $F \propto N$. The ratio $\frac{F}{N}$ i.e., the ratio of frictional force to normal reaction is called *coefficient of friction*.

When the system is in state of impending motion (i.e., when the body just comes to motion), the frictional force has maximum value $F_s$ which is known as *static friction*. The ratio $\frac{F_s}{N}$ is called *coefficient of static friction* and is denoted by $\mu_s$.

$$\mu_s = \frac{F_s}{N}$$

When motion starts, the maximum frictional force falls to some lower value $F_k$ which is known as *kinetic friction*. The ratio $\frac{F_k}{N}$ is called *coefficient of kinetic friction* and is denoted by $\mu_k$.

$$\mu_k = \frac{F_k}{N}$$

### Limiting Friction

The maximum value of frictional force which acts on the body when it just starts to slide over another body is called *limiting friction*.

Mathematically, $F_{max} = F_{lim} = \mu_s N$



Scanned with CamScanner

## Angle of Friction

*Angle of friction* ($\phi$) is defined as the angle which the resultant of normal reaction and limiting frictional force makes with the normal reaction.

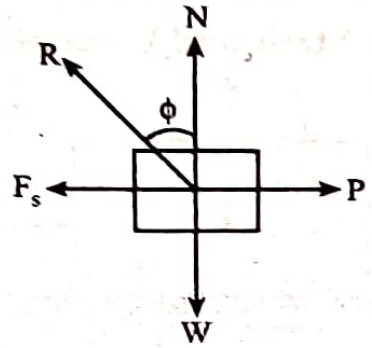


where

N = Normal reaction

$F_s$ = Limiting friction

R = Resultant of N and $F_s = \sqrt{N^2 + F_s^2}$

$$\tan\phi = \frac{F_s}{N} = \frac{\mu_s N}{N} = \mu_s$$

## Angle of Repose

*Angle of repose* is defined as the angle $\alpha$ of the inclined plane at which the block resting on it is about to slide down the plane.

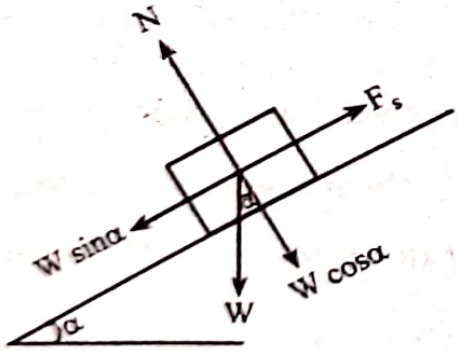


At equilibrium,

$F_s = W \sin\alpha$

or, $\mu_s N = W \sin\alpha$

or, $\mu_s W \cos\alpha = W \sin\alpha$

or, $\mu_s = \dfrac{W \sin\alpha}{W \cos\alpha} = \tan\alpha$



Scanned with CamScanner

## 5.3 Condition of Tipping (Overturning) and Sliding

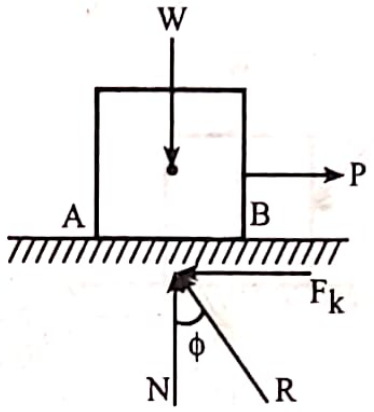


When the applied horizontal force P Increases, frictional force also increases slowly form 0 to $F_s$ (maximum frictional force). Since the applied force is directed towards right end of the block so that couples formed by P and F as well as W and N remain balanced. If R reaches end B of the block before F reaches its maximum value $F_s$, then the couples will be imbalanced causing overturning or tipping about B. If F reaches to its maximum frictional force $F_s$ earlier than the R reaches end B of the block, the block will slide as P and F will cause more clockwise moment than anticlockwise moment due to N and W.

## 5.4 No Friction, No Motion, Impending Motion, and Motion

**No Friction**

When the applied force P is perpendicular to the surface of contact, no friction exists as only vertical forces are present and no horizontal component of force exist.

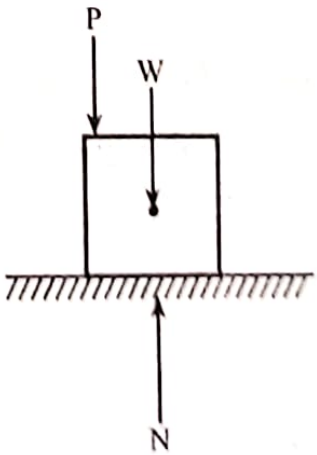




Scanned with CamScanner

**No Motion**

In this case P is in inclined position.

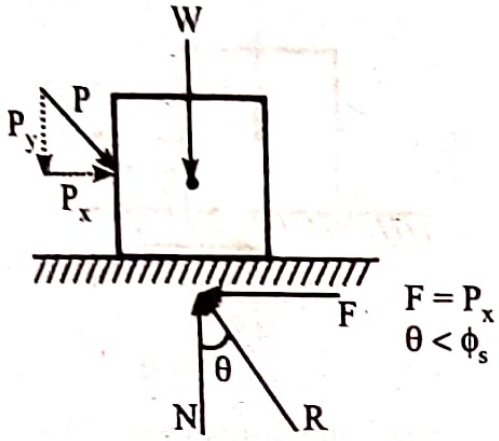


This force trends to move the body along the surface but are not large enough to set in motion since angle between N (normal reaction) and resultant (R) i.e., Q is less than angle of static friction ($\phi_s$).

**Impending Motion**

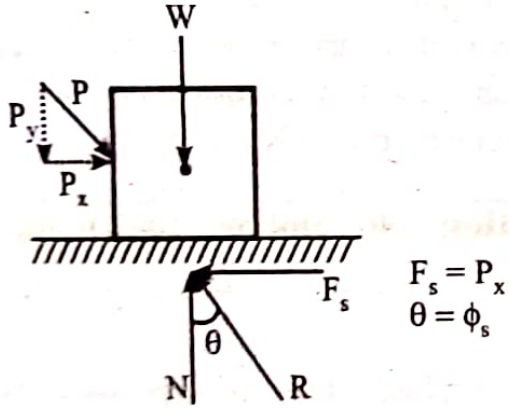


As $P_x$ increases gradually, the resultant R also increases and the angle between N and R becomes $\phi_s$. The body is now in the verge of motion.

Here, frictional force = Limiting frictional force

= Maximum frictional force

$(F_s)_{max} = \mu_s N$



Scanned with CamScanner

**Motion**

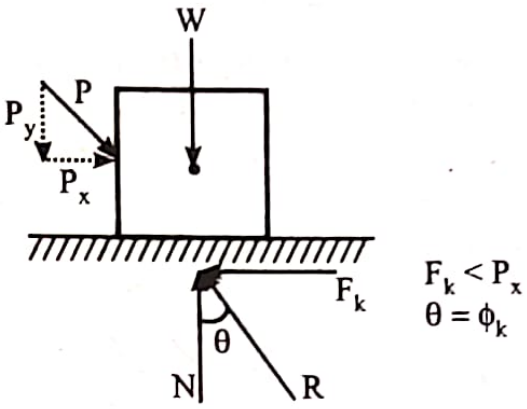


As $P_x$ increases a condition occurs in which the block is in motion. The corresponding frictional force is known as kinetic frictional force $F_k$ and angle is $\phi_k$.

$$F_k = \mu_k N$$

## 5.5 High Tension Friction Grip Bolts

High tension friction grip bolts are high strength structural bolts which have been tightened such as to induce tension in the bolt shank. Due to the tension in the bolt, the interface between the piles (steel member in joint) cannot move relative to each other because of frictional resistance. The bolt act differently than normal bolts or rivets. Friction along interface takes load in case of high tension friction grip bolt subject to shear.

(a) Ordinary bolt (b) High tension friction grip bolt



Scanned with CamScanner

1. **A block 'A' of weight 100 N rests on an inclined plane and another weight W is attached to the first weight through a string as shown in figure. If the coefficient of friction between the block and plane is 0.3. determine the maximum value of W so that equilibrium can exist.**

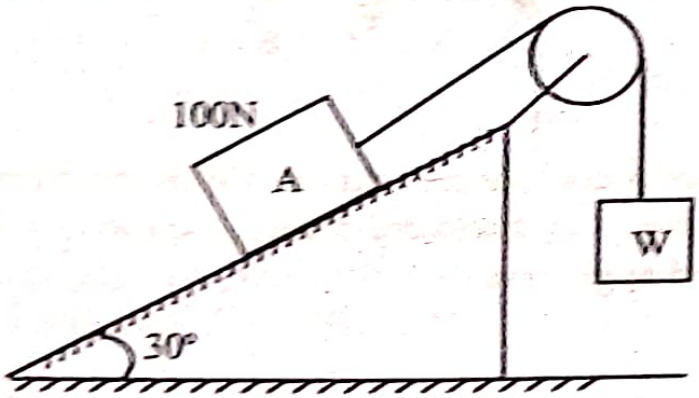


**Solution:**

Weight of block A, $W_A = 100N$

Coefficient of friction, $\mu_s = 0.3$

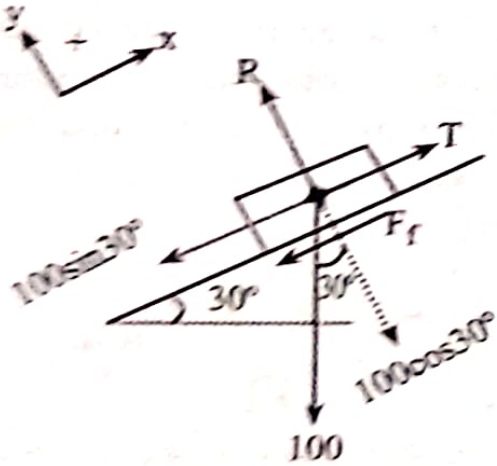


FBD of block A

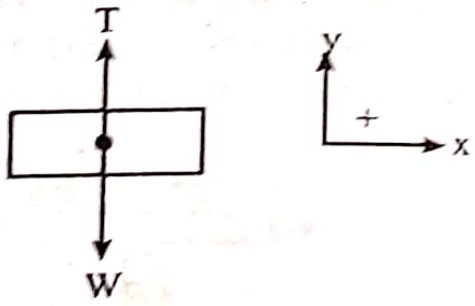


FBD of W

For block A, applying condition of equilibrium in the direction perpendicular to the inclined plane, we have

$R - 100 \cos 30° = 0$

$\therefore R = 86.6N$

Applying condition of equilibrium in the direction parallel to the inclined plane, we have



Scanned with CamScanner

$T - 100 \sin 30^\circ - F_f = 0$

Where $F_f = \mu_s \times R = 0.3 \times 86.6 = 25.98$ N

or, $T - 50 - 25.98 = 0$

or, $T = 75.98$ N

For weight W,

$(\uparrow +) \sum F_y = 0$

or, $T - W = 0$

$\therefore W = T = 75.98$ N

**2 Determine the minimum angle θ (made by the ladder AB of length 'L' with the floor) at which a uniform ladder can be placed against a wall without slipping under its own weight (W). The coefficient of friction for all surfaces is 0.2.**

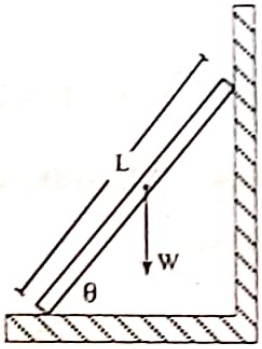


**Solution:**

When ladder slides downwards top (B) on its own weight the bottom part A slides to the left thereby producing frictional force upwards and towards right respectively at B and A.

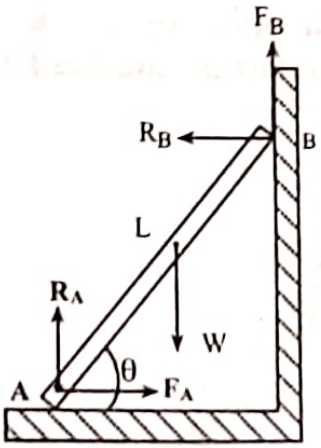


$(\overset{+}{\rightarrow}) \sum F_x = 0$



Scanned with CamScanner

or, $F_A - R_B = 0$

or, $R_B = F_A = \mu R_A = 0.2\, R_A$ .....(i)

$(+\uparrow)\sum F_y = 0$

or, $F_B + R_A - W = 0$

or, $F_B + R_A = W$

or, $0.2\, R_B + R_A = W$ $(\because F_B = \mu R_B)$

or, $0.2\,(0.2R_A) + R_A = W$ (using equation (i) )

or, $R_A = \dfrac{W}{1.04} = 0.962W$

From equation (i), $R_B = 0.2\, R_A = 0.192W$

$\circlearrowleft^{+} \sum M_B = 0$

or, $-W \times \dfrac{L}{2} \cos\theta + R_A \times L\cos\theta - F_A \times L\sin\theta = 0$

or, $-0.5\, WL\cos\theta + 0.962\, WL\cos\theta - 0.192WL\sin\theta = 0$

or, $0.462\cos\theta = 0.192\sin\theta$

or, $\tan\theta = \dfrac{0.462}{0.192}$

$\theta = \tan^{-1}(2.40625) = 67.43°$

**3. A uniform bar AB having length 5m and weighing 500N is fastened by a frictionless pin to a block, weighing 200N as shown in figure below. At the vertical wall, coefficient of friction is0.3 while under the block is 0.20. Determine the forces P needed to start the motion P to the left.**

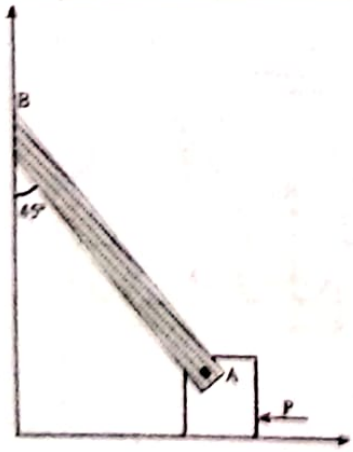




Scanned with CamScanner

**Solution:**

Considering the free body diagram of bar AB

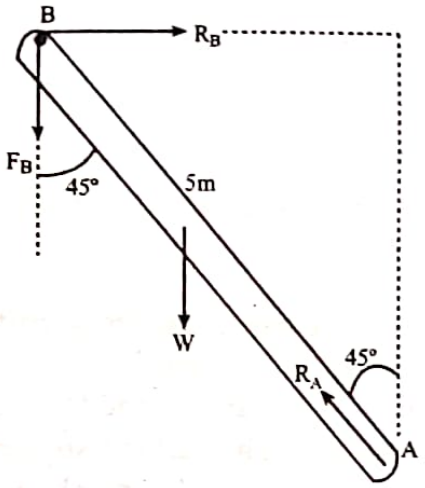


When the motion just starts to begin, the forces are in equilibrium and so are the moments.

$(\circlearrowleft^{+})\Sigma M_A = 0$

or, $R_B \times 5\cos45° - F_B \times 5\sin45° - W_1 \times 2.5\sin45° = 0$

or, $(R_B - F_B)\frac{5}{\sqrt{2}} = W_1\frac{2.5}{\sqrt{2}}$

or, $(R_B - \mu_1 R_B)2 = W_1$

or, $R_B(1 - \mu_1)\,2 = W_1$

or, $R_B = \frac{W_1}{2(1-\mu_1)} = \frac{500}{2(1-0.3)} = 357.14$ N

$(\overset{+}{\rightarrow})\ \Sigma F_x = 0$

or, $R_B - R_A\cos45° = 0$

or, $R_A = \frac{R_B}{\cos45°} = 505$ N

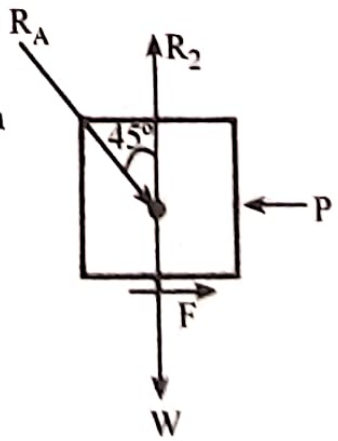


On considering the free-body diagram of block,

$(+\uparrow)\Sigma F_y = 0$

or, $-R_A\cos45° - N + R_2 = 0$

or, $R_2 = R_A\cos45° - N = 557.1$ N



Scanned with CamScanner

$(\xrightarrow{+}) \Sigma F_x = 0$

or, $-P + F + R_A \sin 45^\circ = 0$

or, $P = F + R_A \sin 45^\circ = \mu R_2 + R_A \sin 45^\circ$

$= 0.2 \times 557.10 + 505 \sin 45^\circ$

or, $P = 468.5$ N ($\leftarrow$)

Thus, 468.5N is to be applied to block in order to start the motion to the left.

**4. A ladder shown in figure is 4m long and is supported by a horizontal floor and a vertical wall. The coefficient of friction at the wall is 0.3 and at the floor is 0.45. The weight of the ladder is 300N. The ladder supports a vertical load of 1000N at C. Determine the reactions at A and B and compute the least value of α at which ladder may be placed without slipping to right.**

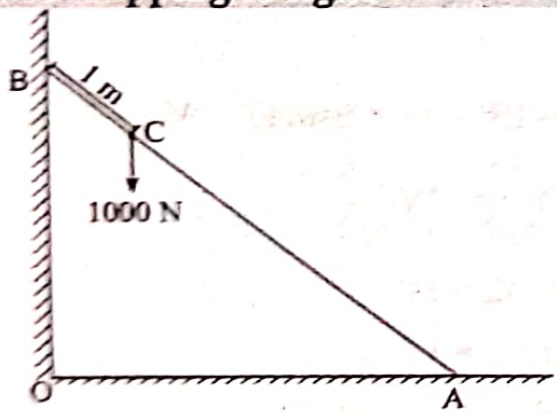


**Solution:**

$\mu_w = 0.3$, $\mu_f = 0.45$

While ladder tends to slide to the right, the induced reaction are:

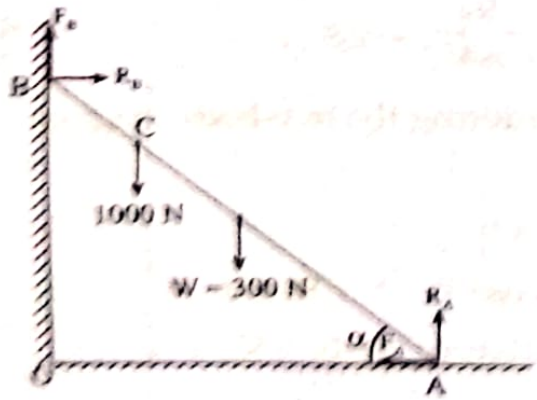




Scanned with CamScanner

$(\overset{+}{\rightarrow})\ \Sigma F_x = 0$

or, $F_A = R_B$

or, $R_B = F_A = \mu_f R_A = 0.45R_A$ ..... (i)

$(+\uparrow)\ \Sigma F_y = 0$

or, $F_B - 1000 - 300 + R_A = 0$

or, $\mu_w R_B - 1300 + R_A = 0$

or, $0.3\times0.45\times R_A - 1300 + R_A = 0$

or, $R_A = \dfrac{1300}{1.135} = 1145.374$ KN

$R_B = 0.45R_A = 0.45\times1145.374 = 515.42$ KN

Taking moment about B, we have

$(\circlearrowleft^{+})\Sigma M_B = 0$

or, $1000\times1\times\cos\alpha + 300\times2\times\cos\alpha + F_A\times4\times\sin\alpha - R_A\times4\times\cos\alpha = 0$

or, $2061.68\sin\alpha = 2981.496\cos\alpha$

or, $\tan\alpha = 1.446$

$\therefore\ \alpha = 55.36°$

**5. Determine whether the block shown is in equilibrium or not and find the magnitude and direction of frictional force when θ = 25° and P = 750 N.**

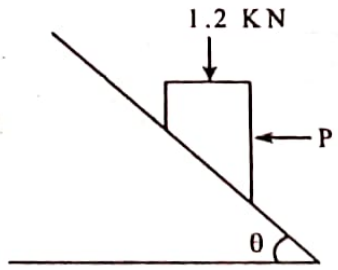


**[2018 Fall, PoU]**

**Solution:**

FBD of the figure is:

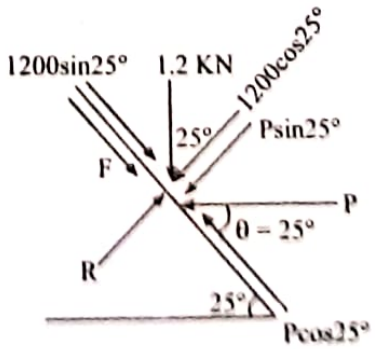




Scanned with CamScanner

$(+\searrow)\ \Sigma F_x = 0$ (Force parallel to surface)

or, $F - P\cos25° + 1200\sin25° = 0$

or, $F - 750\cos25° + 1200\sin25° = 0$

or, $F = 172.6$ N

$(\nearrow+)\ \Sigma F_y = 0$ (Force perpendicular to surface)

or, $R - 1200\cos25° - 750\sin25° = 0$

or, $R = 1404.5$ N

Maximum frictional force $(F_m) = u_s R = 0.35 \times 1404.5 = 491.6$N

As $F < F_m$, the body is in equilibrium.

Magnitude and direction of F = 172.6 N


**6. The 700 N force is applied to the 100 kg block, which is stationary before the force is applied. Check whether the block will remain in equilibrium after the force is applied. Also determine magnitude and direction of frication force. The static and kinematic coefficient of friction between the surfaces is 0.8 and 0.6 respectively.**

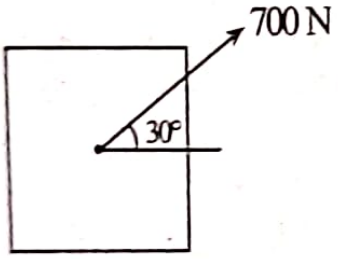


**[2017 Fall, PoU]**

**Solution:**

FBD of the given figure is:

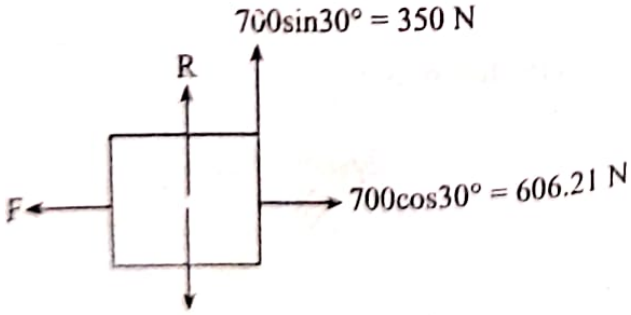


$(\overset{+}{\rightarrow})\ \Sigma F_x = 0$



Scanned with CamScanner

or, $606.21 - F = 0$

or, $F = 606.21$ N

Limiting frictional force ($F_m$) = $\mu_s \times R$

$(+\uparrow)\ \Sigma F_y = 0$

or, $R - 981 + 350 = 0$

or, $R = 631$ N

So, $F_m = 0.8 \times 631 = 504.8$ N

Since $F > F_m$, the body is not in equilibrium.

Magnitude and direction of frictional force (F)= 606.21N (←)

**7. Knowing that the coefficient of friction between the 25 kg block and the incline is $\mu_s = 0.25$, determine (a) smallest value of P required to start the block moving up the incline (b) the corresponding value of β.**

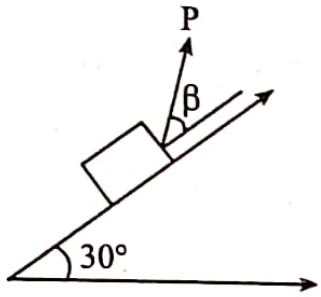


**[2016 Fall, PoU]**

**Solution:**

FBD of the figure is:

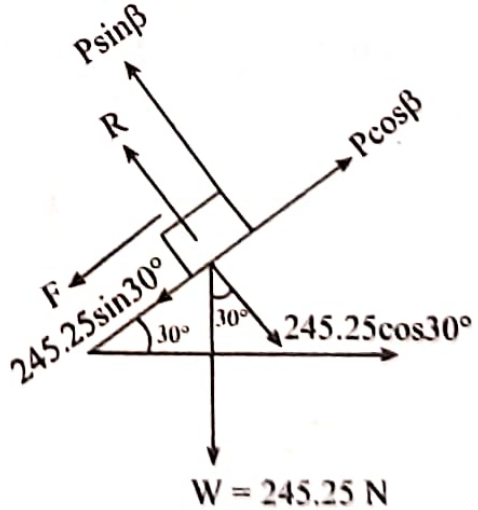


$(+\nwarrow)$ ΣForces perpendicular to plane = 0



Scanned with CamScanner

or, $R + P\sin\beta - 245.25\cos 30 = 0$

or, $R = 212.4 - P\sin\beta$ .....(i)

($\nearrow$+) ΣForces along the plane = 0

or, $P\cos\beta - F - 245.25\sin 30 = 0$

or, $P\cos\beta - 0.25R - 122.625 = 0$ [ $F = 0.25R$]

or, $P\cos\beta - 0.25(212.4 - P\sin\beta) - 122.625 = 0$

or, $P\cos\beta + 0.25P\sin\beta = 175.725$

or, $P(\cos\beta + 0.25\sin\beta) = 175.725$

or, $P = \dfrac{175.725}{\cos\beta + 0.25\sin\beta}$ .....(ii)

To determine smallest value of P, the term "$\cos\beta + 0.25\sin\beta$" should be maximum. So,

$$\frac{d}{d\beta}(\cos\beta + 0.25\sin\beta) = 0$$

or, $-\sin\beta + 0.25\cos\beta = 0$

or, $\tan\beta = 0.25$

$\therefore$ $\beta = 14.03°$

Substituting value of β in (ii),

$$P = \frac{175.725}{\cos 14.03 + 0.25\sin 14.03} = 170.47\text{ N}$$

8. **Two blocks A and B of 40N and 20N respectively are in equilibrium position as shown in figure. Calculate the force (P) required to move block A. Take μ = 0.3 for all surface.**

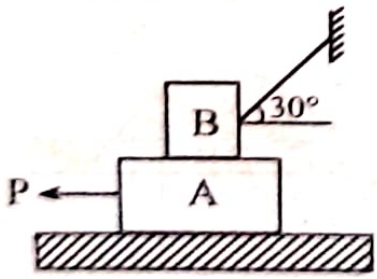




Scanned with CamScanner

**Solution:**

FBD of block B

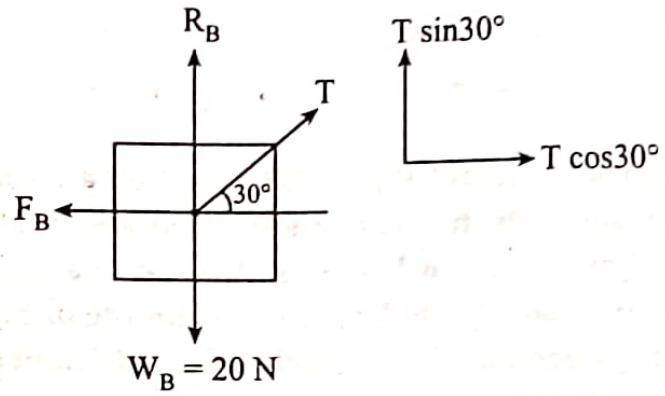


$(+\uparrow)\ \Sigma F_y = 0$

or, $R_B + T\sin30° - 20 = 0$

or, $R_B = 20 - 0.5\,T$ ..... (i)

$\left(\overset{+}{\rightarrow}\right)\ \Sigma F_x = 0$

or, $T\cos30° - F_B = 0$

or, $T\cos30° - \mu R_B = 0\ (\because F = \mu_s R)$

or, $T\cos30° - 0.3 \times (20 - 0.5T) = 0$ ( from i)

or, $T\cos30° - 6 + 0.15T = 0$

or, $T = 5.905$ N

So, $R_B = 20 - 0.5 \times (5.905) = 17.04$ N

Again, FBD of block A

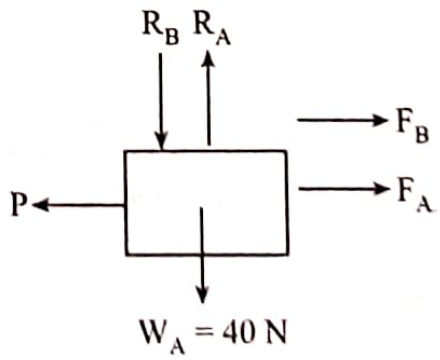


$(+\uparrow)\ \Sigma F_y = 0$

or, $R_A - R_B - 40 = 0$

or, $R_A - 17.04 - 40 = 0 \Rightarrow R_A = 57.04$ N



Scanned with CamScanner

$(\overset{+}{\rightarrow})\ \Sigma F_x = 0$

or, $F_A - F_B - P = 0$

or, $0.3 \times R_A - 0.3\ R_B = P$

or, $P = 0.3 \times 57.04 - 0.3 \times 17.04 = 22.2$ N

**9. A block of weight $W_1$ = 1200 N rest on a horizontal surface that supports the top of another block $W_2$ = 200 N as shown in figure. The block ($W_2$) is attached to a vertical wall by a inclined string AB. Find the magnitude of horizontal force (P) applied on a lower block. The coefficient of friction at a contact surface be 0.25.**

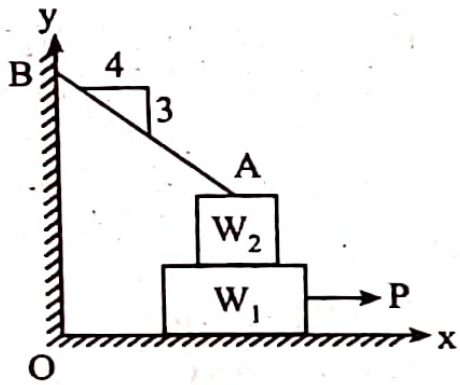


[2018, PU]

**Solution:**

FBD of block ($W_2$):

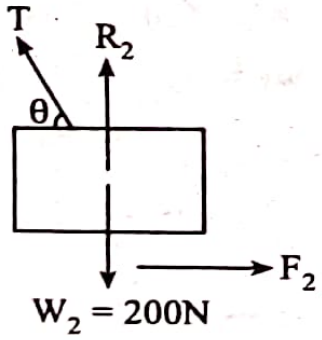


$\theta = \tan^{-1}\left(\frac{3}{4}\right) = 36.87°$

$(+\uparrow)\ \Sigma F_y = 0$

or, $T \sin 36.87° + R_2 - 200 = 0$

or, $R_2 = 200 - 0.6\ T$ ..... (i)

$(\overset{+}{\rightarrow})\ \Sigma F_x = 0$



Scanned with CamScanner

or, $F_2 - T\cos 36.87° = 0$

or, $0.25 \times R_2 - 0.8\,T = 0$

or, $0.25\,(200 - 0.6T) - 0.8T = 0$ (from i)

or, $50 - 0.15\,T - 0.8\,T = 0$

or, $T = 52.632$ N

FBD of block ($W_1$)

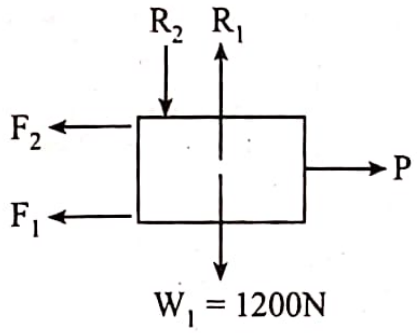


$(+\uparrow)\ \Sigma F_y = 0$

or, $R_1 - R_2 - 1200 = 0$

or, $R_1 - (200 - 0.6 \times 52.632) - 1200 = 0$

or, $R_1 - 168.42 - 1200 = 0$

or, $R_1 = 1368.42$ N

$\left(\overset{+}{\rightarrow}\right)\ \Sigma F_x = 0$

or, $P - F_1 - F_2 = 0$

or, $P - 0.25\,R_1 - 0.25\,R_2 = 0$

or, $P - 0.25 \times (1368.42) - 0.25\,(168.42) = 0$

$\therefore$ $P = 384.21$ N

**10. Knowing that $\theta = 50°$, determine the largest force P for which equilibrium of the 7.5 Kg block is maintained. Take $\mu_s = 0.4$.**

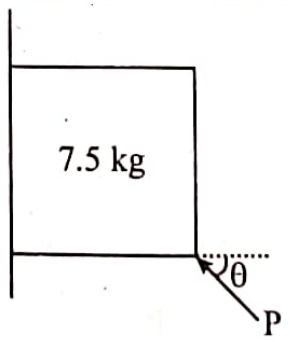


**[2018 Spring, PoU]**



Scanned with CamScanner

**Solution:**

FBD of the figure can be drawn as:

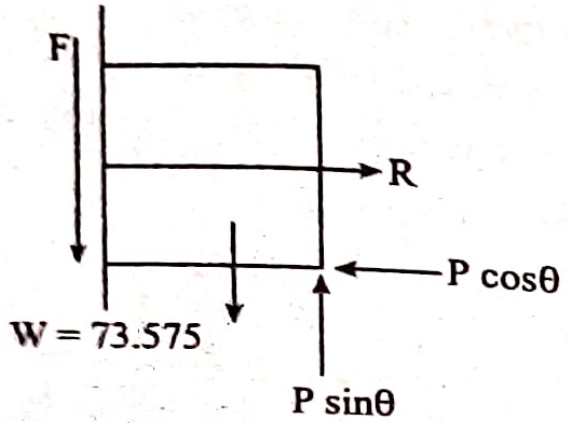


At equilibrium,

$(\overset{+}{\rightarrow})\ \Sigma F_x = 0$

or, $R - P\cos\theta = 0$

or, $R = P\cos\theta$ .....(i)

$(+\uparrow)\Sigma F_y = 0$

or, $P\sin\theta - F - W = 0$

or, $P\sin\theta - \mu_s R - 73.575 = 0$

or, $P\sin\theta - 0.4\,(P\cos\theta) = 73.575$ (From eq. i)

or, $P\sin 50° - 0.4\,P\cos 50° = 73.575$

or, $P = 144.83$ N

∴ The largest value of P is 144.83 N

**11. Knowing that θ = 40°, determine the smallest force (P) for which equilibrium of 7.5 kg block is maintained. Take $\mu_s$ = 0.45 and $\mu_k$ = 0.35.**

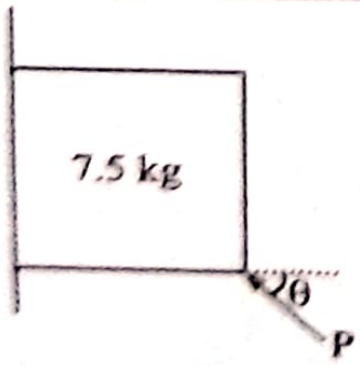


[2019 Fall, PoU]



Scanned with CamScanner

**Solution:**

Free body diagram is drawn as:

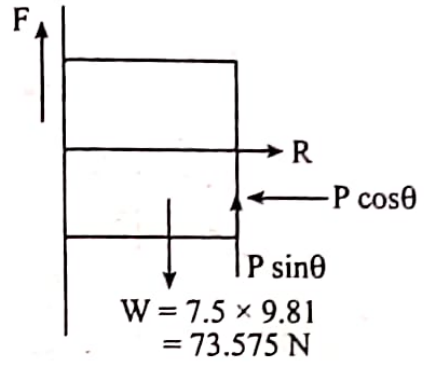


Applying the equation of equilibrium,

$(\overset{+}{\rightarrow})\ \Sigma F_x = 0$

or, $R - P\cos\theta = 0$ ..... (i)

or, $R = P\cos\theta$

$(+\uparrow)\ \Sigma F_y = 0$

or, $F - 73.575 + P\sin\theta = 0$

or, $\mu_s R - 73.575 + P\sin\theta = 0$

or, $0.45\,(P\cos\theta) - 73.575 + P\sin\theta = 0$ ( From i)

or, $0.45\,(P\cos 40°) + P\sin 40° = 73.575$

or, $0.344\,P + 0.642\,P = 73.575$

or, $0.986\,P = 73.575$

or, $P = 74.61$ N

∴ The smallest value of P is 74.61 N

**12. Two masses $m_1$ = 25 kg and $m_2$ = 15 kg are tied together by a rope parallel to the inclined plane surface as shown in figure. It $\mu_s$ for $m_1$ is 0.25 and that for $m_2$ is 0.5. Find (a) the value of θ for which masses will just start slipping (b) tension in the rope.**

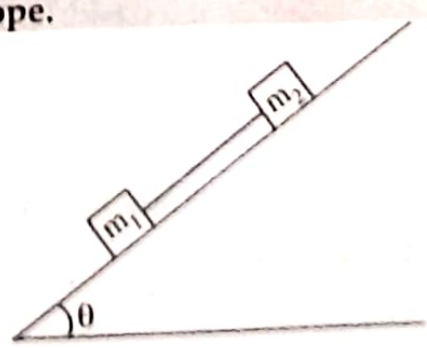


[2013 Fall, PoU]



Scanned with CamScanner

**Solution:**

FBD of block $m_1$

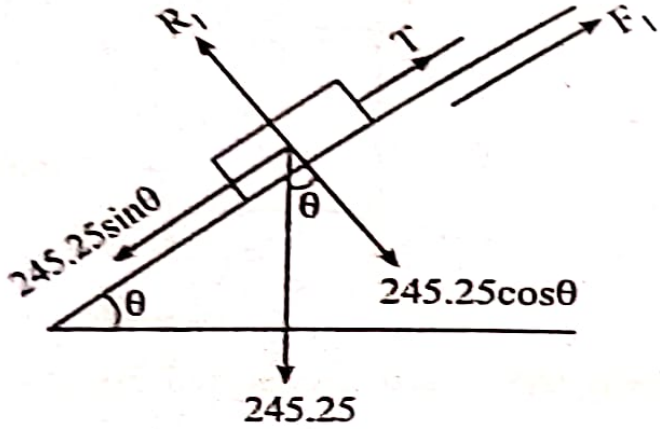


Let, T be the tension on the rope

$(\div\nwarrow)\Sigma F_y = 0$ (Forces perpendicular to plane = 0)

or, $R_1 - 245.25\cos\theta = 0$

$\Rightarrow$ $R_1 - 245.25\cos\theta$

$(\nearrow\div)\Sigma F_x = 0$ [Forces along the plane = 0]

or, $T + F_1 - 245.25\sin\theta = 0$

or, $T + 0.25\, R_1 - 245.25\sin\theta$

or, $T = 245.25\sin\theta - 0.25\,(245.25\cos\theta)$

$\Rightarrow$ $T = 245.25\sin\theta - 61.31\cos\theta$ .....(i)

**FBD of block ($m_2$)**

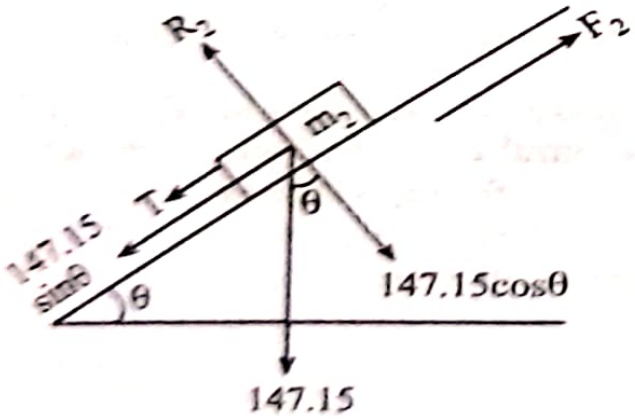


$(\nwarrow+)\Sigma F_y = 0$ [Forces perpendicular to the plane = 0]

or, $R_2 - 147.15\cos\theta = 0$

$\Rightarrow$ $R_2 = 147.15\cos\theta$



Scanned with CamScanner

$(\nearrow +)\Sigma F_x = 0$ [Forces along the plane = 0]

or, $F_2 - T - 147.15\sin\theta = 0$

or, $0.5R_2 - 147.15\sin\theta = T$

or, $T = 0.5\,(147.15\cos\theta) - 147.15\sin\theta$

or, $T = 73.575\cos\theta - 147.15\sin\theta$ .....(ii)

Equating (i) and (ii)

$245.25\sin\theta - 61.31\cos\theta = 73.575\cos\theta - 147.15\sin\theta$

or, $389.4\sin\theta = 134.885\cos\theta$

or, $\tan\theta = 0.34 \Rightarrow \theta = 18.78°$

Subsituting 'θ' in equation (i)

$T = 245.25\sin(18.78°) - 61.31\cos(16.78°) = 20.9N$

**13. Referring the figure shown, determine the least value of the force (P) to cause motion to impend right wards. Assuming the coefficient of friction under the blocks to be 0.2 and consider pulley of negligible mass**

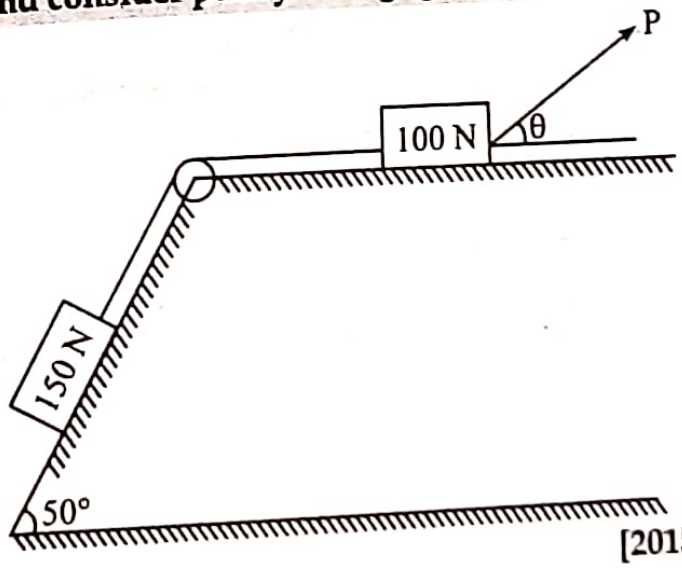


**[2015 Fall, PoU]**

**Solution:**

Let, T be the tension on the rope:

FBD of 150 N block



Scanned with CamScanner

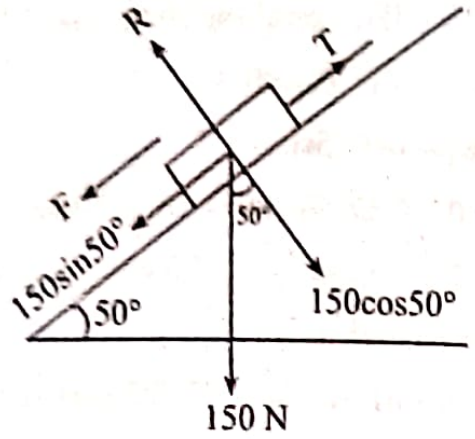


$(+\nwarrow)\Sigma F_y = 0$

or, $R - 150\cos 50° = 0 \Rightarrow R = 96.42$ N

$(\nearrow +)\Sigma F_x = 0$

or, $T - 150\sin 50° - F = 0$

or, $T = 0.2 \times 96.42 + (150\sin 50°) = 134.19$ N

FBD of 100 N block

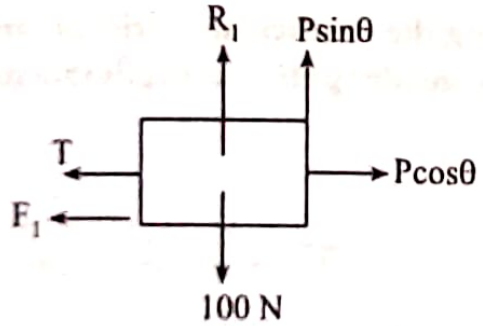


$(+\uparrow)\Sigma F_y = 0$

or, $R_1 - 100 - P\sin\theta = 0 \Rightarrow R_1 = (100 + P\sin\theta)$ .....(i)

$(\overrightarrow{+})\Sigma F_x = 0$

or, $P\cos\theta - T - F_1 = 0$

or, $P\cos\theta - 134.19 - 0.2(100 + P\sin\theta) = 0$

or, $P\cos\theta - 134.19 - 20 - 0.2P\sin\theta = 0$

or $P[\cos\theta - 0.2\sin\theta] = 154.19$

or, $P = \dfrac{154.19}{\cos\theta - 0.2\sin\theta}$ .....(A)

To get the least value of 'P', the term $(\cos\theta - 0.2\sin\theta)$ will be maximum,

So, $\dfrac{d}{d\theta}(\cos\theta - 0.2\sin\theta) = 0$



Scanned with CamScanner

or, $-\sin\theta - 0.2\cos\theta = 0$

or, $\sin\theta = -0.2\cos\theta$

or, $\tan\theta = -0.2$

$\therefore$ $\theta = 11.3°$ [Taking value on positive x-axis]

So, $P = \dfrac{154.19}{\text{cas}11.3° - 0.2\sin 11.3°} = 163.78$ N

**14. A block of mass M = 50 kg rests on a horizontal plane below in figure. Find the magnitude of force (P) required to make block just about to move rightward. The coefficient of static friction between the block and the plane ($\mu_s$) = 0.25**

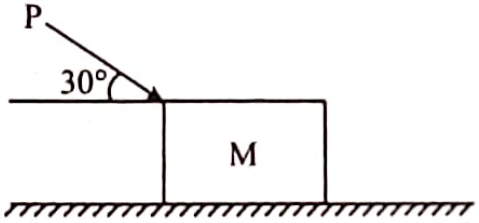


**[2020 spring, PoU]**

**Solution:**

FBD of block is

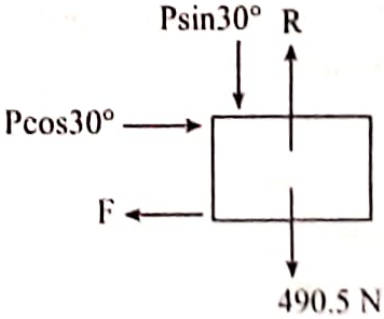


$(+\uparrow)\ \Sigma F_y = 0$

or, $R - P\sin 30° - 490.5 = 0 \Rightarrow R = 490.5 + 0.5P$ .....(i)

$(\overrightarrow{+})\Sigma F_x = 0$

or, $P\cos 30° - F = 0$

or, $0.866P - 0.25R = 0$ [$\because F = \mu R$]

or, $0.866P - 0.25\,(490.5 + 0.5P) = 0$ [$\because$ From equation (i)]

or, $0.866P - 122.625 - 0.125P = 0$

or, $0.741P = 122.625 \Rightarrow P = 165.48$N

$\therefore$ The magnitude of force (P) = 165.48N



Scanned with CamScanner

CHAPTER - 5

# FRICTION

## 5.1 Friction

When a body slides over another body, a force is exerted at a surface of contact by the stationary body on a moving body. This resisting force is called the *force of friction* and acts in the direction opposite to the direction of motion.

**Characteristic of friction:**

i. It always acts in a direction opposite to that in which motion is intended.

ii. It exists as along as the tractive force acts. So, it is passive force.

iii. It is self-adjusting force i.e., only that much comes to play as is just sufficient to prevent motion.

### 5.1.1 Static and Dynamic Friction

**Static Friction**

The frictional force that develops between mating surfaces when subjected to external force but there is no relative motion between them is called *static friction*.

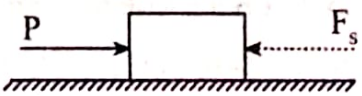


If force P acts towards right, then $F_s$ equal to P acts in opposite direction to prevent motion. This force $F_s$ is static friction.

**Dynamic Friction**

The frictional force that develops between mating surfaces when subjected to external forces and there is relative motion between them is called *dynamic friction* (also known as *kinetic friction*).

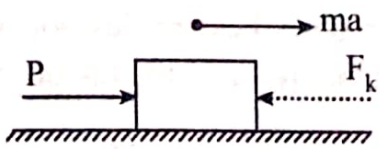




Scanned with CamScanner

## Angle of Friction

*Angle of friction* ($\phi$) is defined as the angle which the resultant of normal reaction and limiting frictional force makes with the normal reaction.

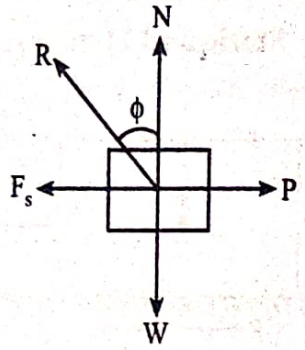


where

N = Normal reaction

$F_s$ = Limiting friction

R = Resultant of N and $F_s = \sqrt{N^2 + F_s^2}$

$$\tan\phi = \frac{F_s}{N} = \frac{\mu_s N}{N} = \mu_s$$

## Angle of Repose

*Angle of repose* is defined as the angle $\alpha$ of the inclined plane at which the block resting on it is about to slide down the plane.

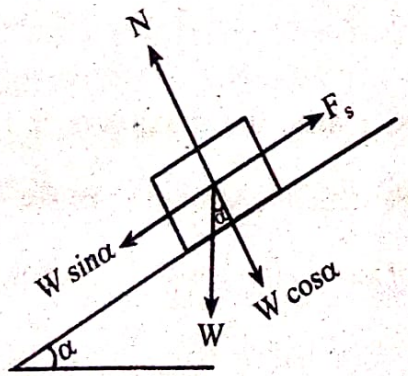


At equilibrium,

$F_s = W \sin\alpha$

or, $\mu_s N = W \sin\alpha$

or, $\mu_s W \cos\alpha = W \sin\alpha$

or, $\mu_s = \dfrac{W \sin\alpha}{W \cos\alpha} = \tan\alpha$



Scanned with CamScanner

## 5.3 Condition of Tipping (Overturning) and Sliding

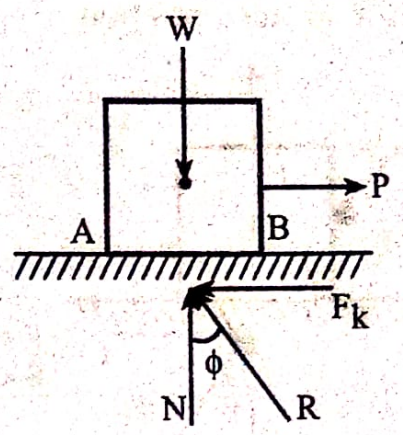


When the applied horizontal force P Increases, frictional force also increases slowly form 0 to $F_s$ (maximum frictional force). Since the applied force is directed towards right end of the block so that couples formed by P and F as well as W and N remain balanced. If R reaches end B of the block before F reaches its maximum value $F_s$, then the couples will be imbalanced causing overturning or tipping about B. If F reaches to its maximum frictional force $F_s$ earlier than the R reaches end B of the block, the block will slide as P and F will cause more clockwise moment than anticlockwise moment due to N and W.

## 5.4 No Friction, No Motion, Impending Motion, and Motion

### No Friction

When the applied force P is perpendicular to the surface of contact, no friction exists as only vertical forces are present and no horizontal component of force exist.

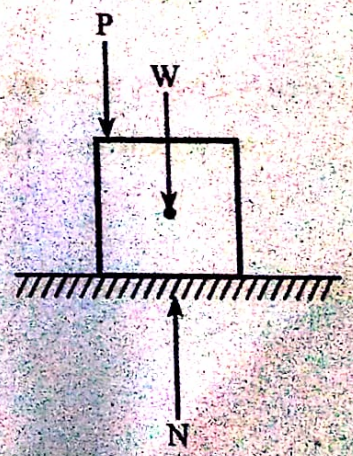




Scanned with CamScanner

**No Motion**

In this case P is in inclined position.

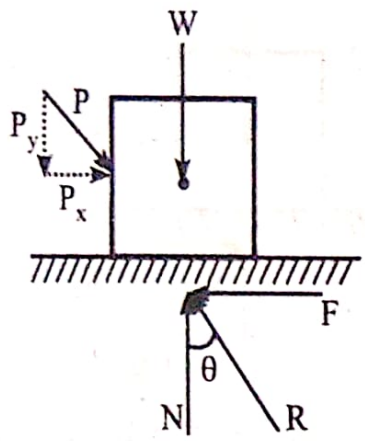


$F = P_x$
$\theta < \phi_s$

This force trends to move the body along the surface but are not large enough to set in motion since angle between N (normal reaction) and resultant (R) i.e., Q is less than angle of static friction ($\phi_s$).

**Impending Motion**

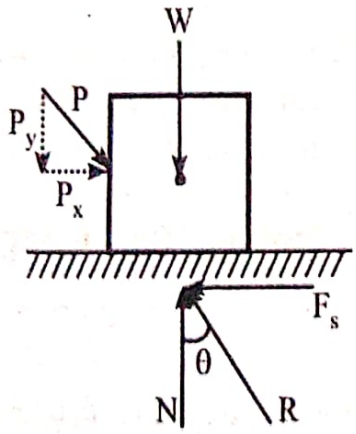


$F_s = P_x$
$\theta = \phi_s$

As $P_x$ increases gradually, the resultant R also increases and the angle between N and R becomes $\phi_s$. The body is now in the verge of motion.

Here, frictional force = Limiting frictional force

= Maximum frictional force

$(F_s)_{max} = \mu_s N$



Scanned with CamScanner

Motion

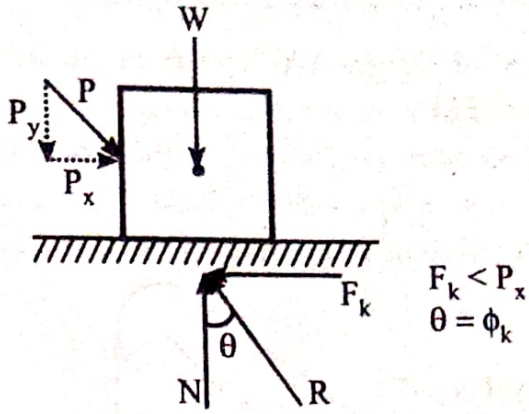


As $P_x$ increases a condition occurs in which the block is in motion. The corresponding frictional force is known as kinetic frictional force $F_k$ and angle is $\phi_k$.

$$F_k = \mu_k N$$

## 5.5 High Tension Friction Grip Bolts

High tension friction grip bolts are high strength structural bolts which have been tightened such as to induce tension in the bolt shank. Due to the tension in the bolt, the interface between the piles (steel member in joint) cannot move relative to each other because of frictional resistance. The bolt act differently than normal bolts or rivets. Friction along interface takes load in case of high tension friction grip bolt subject to shear.

(a) Ordinary bolt (b) High tension friction grip bolt



Scanned with CamScanner

1. **A block 'A' of weight 100 N rests on an inclined plane and another weight W is attached to the first weight through a string as shown in figure. If the coefficient of friction between the block and plane is 0.3. determine the maximum value of W so that equilibrium can exist.**

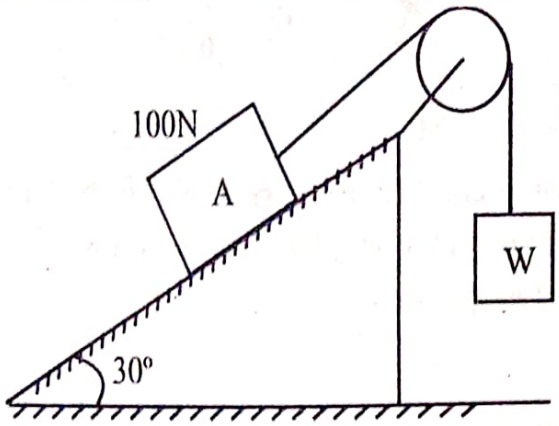


**Solution:**

Weight of block A, $W_A$ = 100N

Coefficient of friction, $\mu_s$ = 0.3

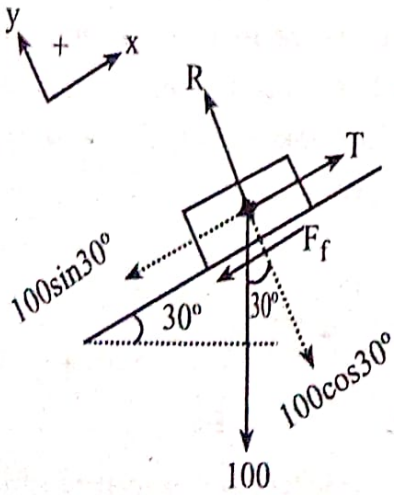


FBD of block A

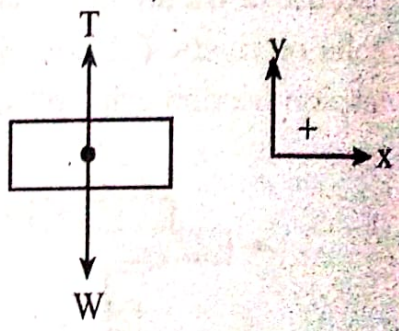


FBD of W

For block A, applying condition of equilibrium in the direction perpendicular to the inclined plane, we have

$R - 100 \cos 30° = 0$

$\therefore R = 86.6N$

Applying condition of equilibrium in the direction parallel to the inclined plane, we have



Scanned with CamScanner

$T - 100 \sin 30° - F_f = 0$

Where $F_f = \mu_s \times R = 0.3 \times 86.6 = 25.98$ N

or, $T - 50 - 25.98 = 0$

or, $T = 75.98$ N

For weight W,

$(\uparrow +)\sum F_y = 0$

or, $T - W = 0$

$\therefore W = T = 75.98$ N

**2. Determine the minimum angle θ (made by the ladder AB of length 'L' with the floor) at which a uniform ladder can be placed against a wall without slipping under its own weight (W). The coefficient of friction for all surfaces is 0.2.**

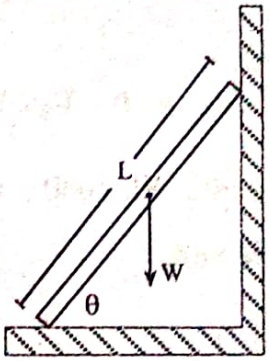


**Solution:**

When ladder slides downwards top (B) on its own weight the bottom part A slides to the left thereby producing frictional force upwards and towards right respectively at B and A.

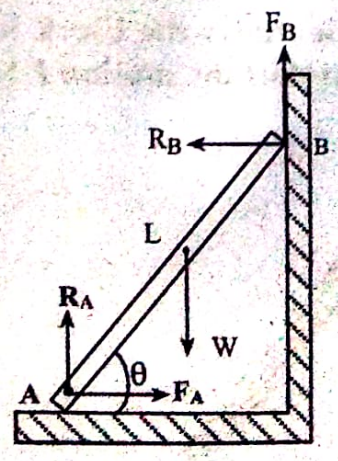


$(\overset{+}{\rightarrow})\sum F_x = 0$



Scanned with CamScanner

or, $F_A - R_B = 0$

or, $R_B = F_A = \mu R_A = 0.2\,R_A$ .....(i)

$(+\uparrow)\sum F_y = 0$

or, $F_B + R_A - W = 0$

or, $F_B + R_A = W$

or, $0.2\,R_B + R_A = W$ $(\because F_B = \mu R_B)$

or, $0.2\,(0.2R_A) + R_A = W$ (using equation (i) )

or, $R_A = \dfrac{W}{1.04} = 0.962W$

From equation (i), $R_B = 0.2\,R_A = 0.192W$

$(\overset{+}{\circlearrowleft})\sum M_B = 0$

or, $-W \times \dfrac{L}{2}\cos\theta + R_A \times L\cos\theta - F_A \times L\sin\theta = 0$

or, $-0.5\,WL\cos\theta + 0.962\,WL\cos\theta - 0.192WL\sin\theta = 0$

or, $0.462\cos\theta = 0.192\sin\theta$

or, $\tan\theta = \dfrac{0.462}{0.192}$

$\theta = \tan^{-1}(2.40625) = 67.43°$

**3. A uniform bar AB having length 5m and weighing 500N is fastened by a frictionless pin to a block, weighing 200N as shown in figure below. At the vertical wall, coefficient of friction is0.3 while under the block is 0.20. Determine the forces P needed to start the motion P to the left.**

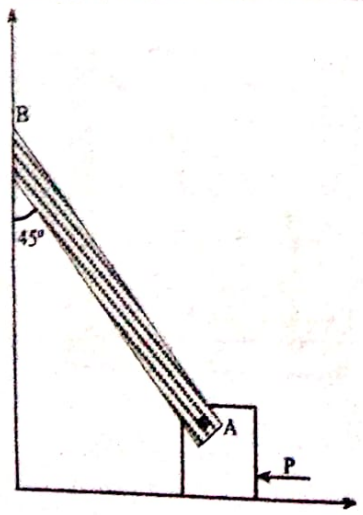




Scanned with CamScanner

Solution:

Considering the free body diagram of bar AB

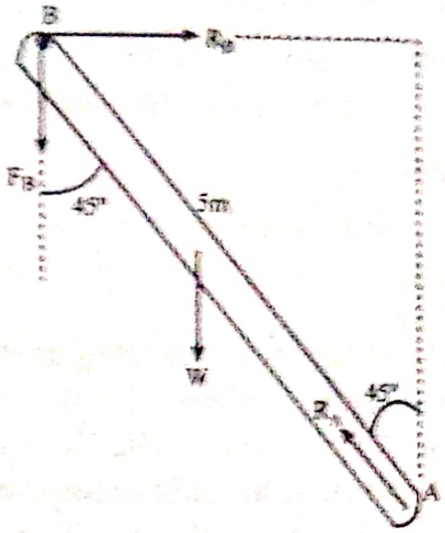


When the motion just starts to begin, the forces are in equilibrium and so are the moments.

$(\circlearrowleft)\Sigma M_A = 0$

or, $R_B \times 5\cos45° - F_B \times 5\sin45° - W_1 \times 2.5\sin45° = 0$

or, $(R_B - F_B)\frac{5}{\sqrt{2}} = W_1\frac{2.5}{\sqrt{2}}$

or, $(R_B - \mu_1 R_B)2 = W_1$

or, $R_B(1 - \mu_1)\,2 = W_1$

or, $R_B = \frac{W_1}{2(1-\mu_1)} = \frac{500}{2(1-0.3)} = 357.14$ N

$(\overset{+}{\rightarrow})\ \Sigma F_x = 0$

or, $R_B - R_A\cos45° = 0$

or, $R_A = \frac{R_B}{\cos45°} = 505$ N

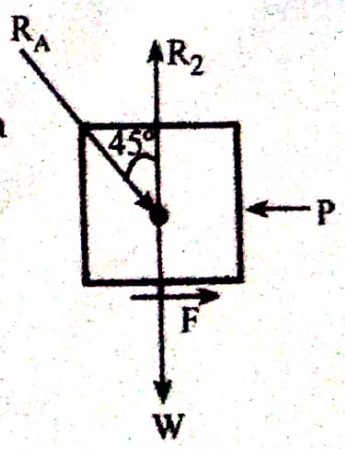


On considering the free-body diagram of block,

$(+\uparrow)\Sigma F_y = 0$

or, $-R_A\cos45° - N + R_2 = 0$

or, $R_2 = R_A\cos45° - N = 557.1$ N



Scanned with CamScanner

$\left(\overset{+}{\rightarrow}\right) \Sigma F_x = 0$

or, $-P + F + R_A \sin 45^\circ = 0$

or, $P = F + R_A \sin 45^\circ = \mu R_2 + R_A \sin 45^\circ$

$= 0.2 \times 557.10 + 505 \sin 45^\circ$

or, $P = 468.5$ N $(\leftarrow)$

Thus, 468.5N is to be applied to block in order to start the motion to the left.

4. **A ladder shown in figure is 4m long and is supported by a horizontal floor and a vertical wall. The coefficient of friction at the wall is 0.3 and at the floor is 0.45. The weight of the ladder is 300N. The ladder supports a vertical load of 1000N at C. Determine the reactions at A and B and compute the least value of α at which ladder may be placed without slipping to right.**

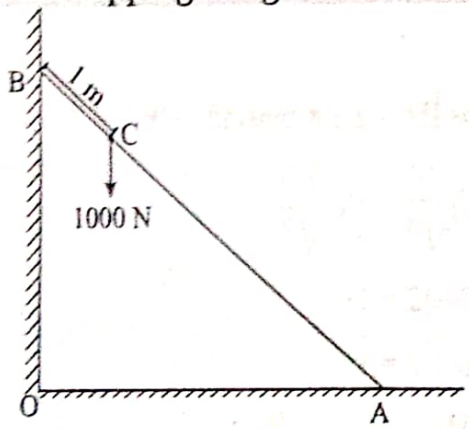


**Solution:**

$\mu_w = 0.3, \mu_f = 0.45$

While ladder tends to slide to the right, the induced reaction are:

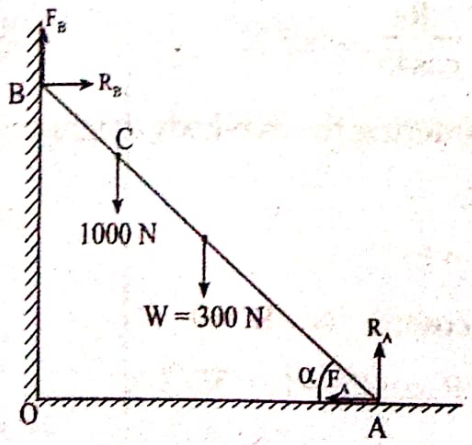




Scanned with CamScanner

$(\overset{+}{\rightarrow})\ \Sigma F_x = 0$

or, $F_A = R_B$

or, $R_B = F_A = \mu_f R_A = 0.45R_A$ ..... (i)

$(+\uparrow)\ \Sigma F_y = 0$

or, $F_B - 1000 - 300 + R_A = 0$

or, $\mu_w R_B - 1300 + R_A = 0$

or, $0.3\times0.45\times R_A - 1300 + R_A = 0$

or, $R_A = \dfrac{1300}{1.135} = 1145.374$ KN

$R_B = 0.45R_A = 0.45\times1145.374 = 515.42$ KN

Taking moment about B, we have

$(\circlearrowleft^{+})\Sigma M_B = 0$

or, $1000\times1\times\cos\alpha + 300\times2\times\cos\alpha + F_A\times4\times\sin\alpha - R_A\times4\times\cos\alpha = 0$

or, $2061.68\sin\alpha = 2981.496\cos\alpha$

or, $\tan\alpha = 1.446$

$\therefore\ \alpha = 55.36°$

**5. Determine whether the block shown is in equilibrium or not and find the magnitude and direction of frictional force when θ = 25° and P = 750 N.**

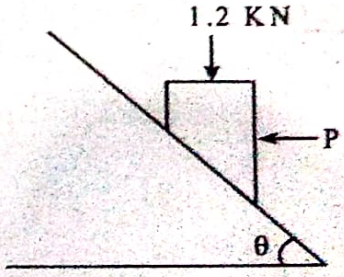


**[2018 Fall, PoU]**

**Solution:**

FBD of the figure is:

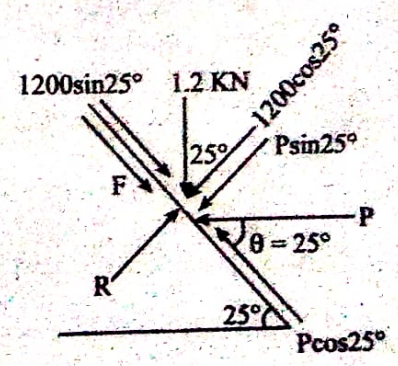




Scanned with CamScanner

$(+\searrow)\ \Sigma F_x = 0$ (Force parallel to surface)

or, $F - P\cos25° + 1200\sin25° = 0$

or, $F - 750\cos25° + 1200\sin25° = 0$

or, $F = 172.6$ N

$(\nearrow+)\ \Sigma F_y = 0$ (Force perpendicular to surface)

or, $R - 1200\cos25° - 750\sin25° = 0$

or, $R = 1404.5$ N

Maximum frictional force $(F_m) = u_sR = 0.35 \times 1404.5 = 491.6$N

As $F < F_m$, the body is in equilibrium.

Magnitude and direction of F = 172.6 N


6. **The 700 N force is applied to the 100 kg block, which is stationary before the force is applied. Check whether the block will remain in equilibrium after the force is applied. Also determine magnitude and direction of frication force. The static and kinematic coefficient of friction between the surfaces is 0.8 and 0.6 respectively.**

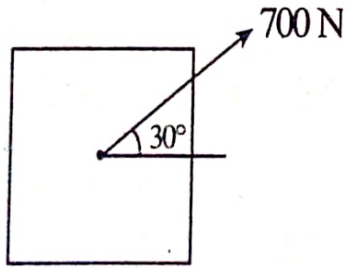


**[2017 Fall, PoU]**

**Solution:**

FBD of the given figure is:

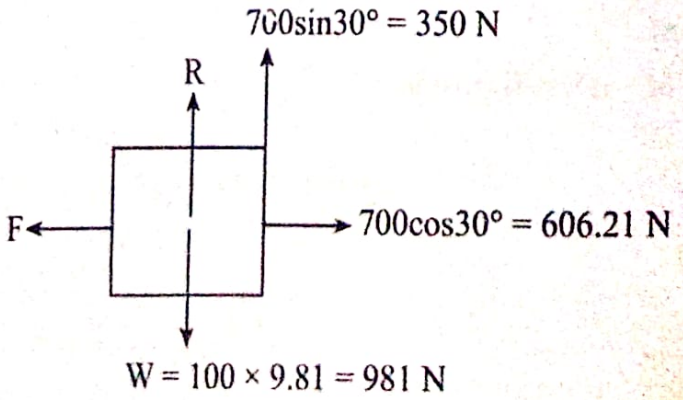


$\left(\overset{+}{\rightarrow}\right)\ \Sigma F_x = 0$



Scanned with CamScanner

or, $606.21 - F = 0$

or, $F = 606.21$ N

Limiting frictional force ($F_m$) = $\mu_s \times R$

$(+\uparrow)\ \Sigma F_y = 0$

or, $R - 981 + 350 = 0$

or, $R = 631$ N

So, $F_m = 0.8 \times 631 = 504.8$ N

Since $F > F_m$, the body is not in equilibrium.

Magnitude and direction of frictional force (F)= 606.21N (←)

**7. Knowing that the coefficient of friction between the 25 kg block and the incline is $\mu_s = 0.25$, determine (a) smallest value of P required to start the block moving up the incline (b) the corresponding value of β.**

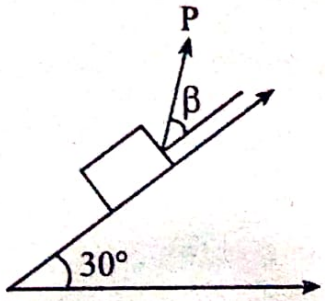


**[2016 Fall, PoU]**

**Solution:**

FBD of the figure is:

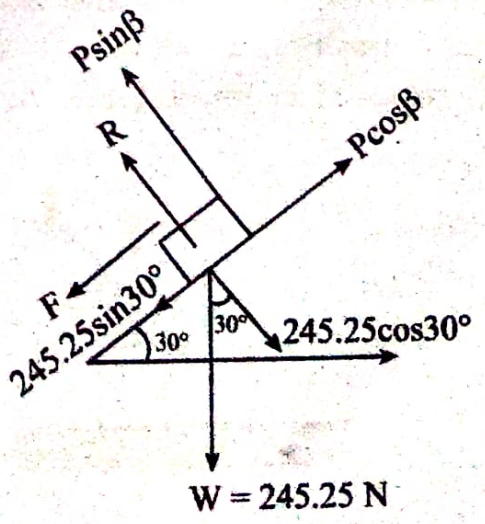


$(+\nwarrow)$ ΣForces perpendicular to plane = 0



Scanned with CamScanner

or, $R + P\sin\beta - 245.25\cos 30 = 0$

or, $R = 212.4 - P\sin\beta$ .....(i)

($\nearrow$+) ΣForces along the plane = 0

or, $P\cos\beta - F - 245.25\sin 30 = 0$

or, $P\cos\beta - 0.25R - 122.625 = 0$ [ $F = 0.25R$]

or, $P\cos\beta - 0.25(212.4 - P\sin\beta) - 122.625 = 0$

or, $P\cos\beta + 0.25P\sin\beta = 175.725$

or, $P(\cos\beta + 0.25\sin\beta) = 175.725$

or, $P = \dfrac{175.725}{\cos\beta + 0.25\sin\beta}$ .....(ii)

To determine smallest value of P, the term "$\cos\beta + 0.25\sin\beta$" should be maximum. So,

$$\frac{d}{d\beta}(\cos\beta + 0.25\sin\beta) = 0$$

or, $-\sin\beta + 0.25\cos\beta = 0$

or, $\tan\beta = 0.25$

$\therefore$ $\beta = 14.03°$

Substituting value of β in (ii),

$$P = \frac{175.725}{\cos 14.03 + 0.25\sin 14.03} = 170.47\text{ N}$$

**8. Two blocks A and B of 40N and 20N respectively are in equilibrium position as shown in figure. Calculate the force (P) required to move block A. Take μ = 0.3 for all surface.**

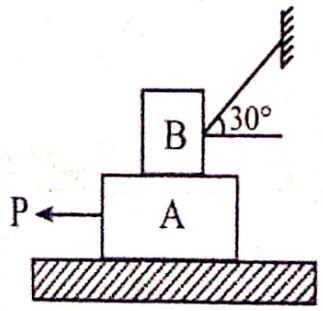




Scanned with CamScanner

**Solution:**

FBD of block B

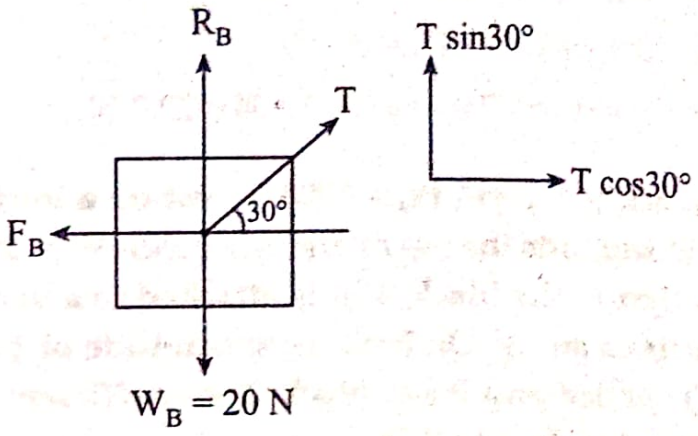


$(+\uparrow)\ \Sigma F_y = 0$

or, $R_B + T\sin30° - 20 = 0$

or, $R_B = 20 - 0.5\,T$ ..... (i)

$\left(\overset{+}{\rightarrow}\right)\ \Sigma F_x = 0$

or, $T\cos30° - F_B = 0$

or, $T\cos30° - \mu R_B = 0\ (\because F = \mu_s R)$

or, $T\cos30° - 0.3 \times (20 - 0.5T) = 0$ ( from i)

or, $T\cos30° - 6 + 0.15T = 0$

or, $T = 5.905$ N

So, $R_B = 20 - 0.5 \times (5.905) = 17.04$ N

Again, FBD of block A

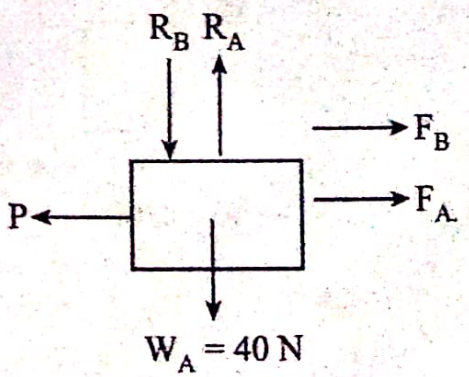


$(+\uparrow)\ \Sigma F_y = 0$

or, $R_A - R_B - 40 = 0$

or, $R_A - 17.04 - 40 = 0 \Rightarrow R_A = 57.04$ N



Scanned with CamScanner

$(\overset{+}{\rightarrow})\ \Sigma F_x = 0$

or, $F_A - F_B - P = 0$

or, $0.3 \times R_A - 0.3\ R_B = P$

or, $P = 0.3 \times 57.04 - 0.3 \times 17.04 = 22.2$ N

**9. A block of weight $W_1$ = 1200 N rest on a horizontal surface that supports the top of another block $W_2$ = 200 N as shown in figure. The block ($W_2$) is attached to a vertical wall by a inclined string AB. Find the magnitude of horizontal force (P) applied on a lower block. The coefficient of friction at a contact surface be 0.25.**

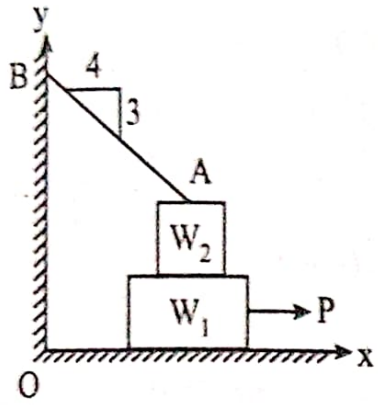


**[2018, PU]**

**Solution:**

FBD of block ($W_2$):

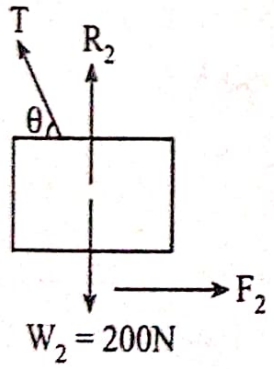


$\theta = \tan^{-1}\left(\frac{3}{4}\right) = 36.87°$

$(+\uparrow)\ \Sigma F_y = 0$

or, $T \sin 36.87° + R_2 - 200 = 0$

or, $R_2 = 200 - 0.6\ T$ ..... (i)

$(\overset{+}{\rightarrow})\ \Sigma F_x = 0$



Scanned with CamScanner

or, $F_2 - T\cos 36.87° = 0$

or, $0.25 \times R_2 - 0.8\,T = 0$

or, $0.25\,(200 - 0.6T) - 0.8T = 0$ (from i)

or, $50 - 0.15\,T - 0.8\,T = 0$

or, $T = 52.632$ N

FBD of block ($W_1$)

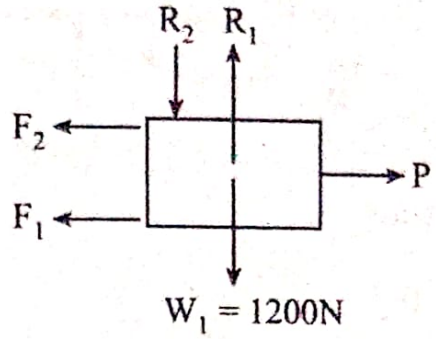


$(+\uparrow)\ \Sigma F_y = 0$

or, $R_1 - R_2 - 1200 = 0$

or, $R_1 - (200 - 0.6 \times 52.632) - 1200 = 0$

or, $R_1 - 168.42 - 1200 = 0$

or, $R_1 = 1368.42$ N

$\left(\overset{+}{\rightarrow}\right)\ \Sigma F_x = 0$

or, $P - F_1 - F_2 = 0$

or, $P - 0.25\,R_1 - 0.25\,R_2 = 0$

or, $P - 0.25 \times (1368.42) - 0.25\,(168.42) = 0$

$\therefore$ $P = 384.21$ N

**10. Knowing that $\theta = 50°$, determine the largest force P for which equilibrium of the 7.5 Kg block is maintained. Take $\mu_s = 0.4$.**

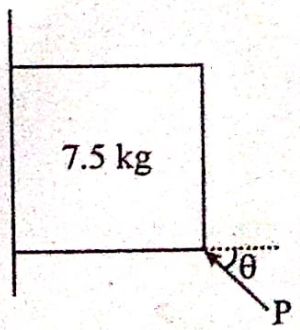


**[2018 Spring, PoU]**



Scanned with CamScanner

**Solution:**

FBD of the figure can be drawn as:

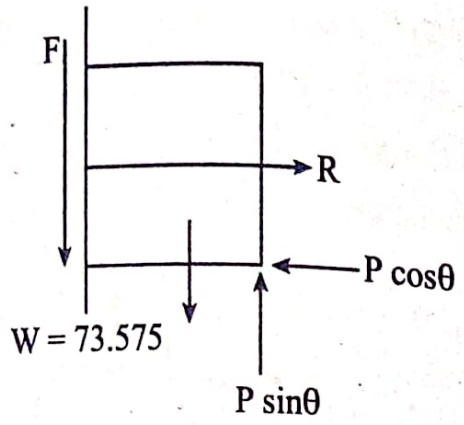


At equilibrium,

$\left(\overset{+}{\rightarrow}\right) \Sigma F_x = 0$

or, $R - P\cos\theta = 0$

or, $R = P\cos\theta$ .....(i)

$(+\uparrow)\Sigma F_y = 0$

or, $P\sin\theta - F - W = 0$

or, $P\sin\theta - \mu_s R - 73.575 = 0$

or, $P\sin\theta - 0.4\,(P\cos\theta) = 73.575$ (From eq. i)

or, $P\sin 50° - 0.4\,P\cos 50° = 73.575$

or, $P = 144.83$ N

∴ The largest value of P is 144.83 N

**11. Knowing that θ = 40°, determine the smallest force (P) for which equilibrium of 7.5 kg block is maintained. Take $\mu_s$ = 0.45 and $\mu_k$ = 0.35.**

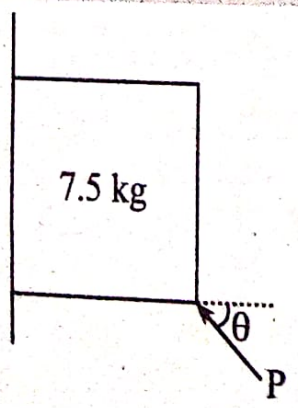


**[2019 Fall, PoU]**



Scanned with CamScanner

**Solution:**

Free body diagram is drawn as:

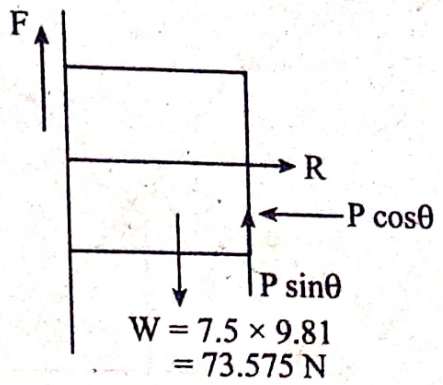


Applying the equation of equilibrium,

$(\overset{+}{\rightarrow})\ \Sigma F_x = 0$

or, $R - P\cos\theta = 0$ ..... (i)

or, $R = P\cos\theta$

$(+\uparrow)\ \Sigma F_y = 0$

or, $F - 73.575 + P\sin\theta = 0$

or, $\mu_s R - 73.575 + P\sin\theta = 0$

or, $0.45\,(P\cos\theta) - 73.575 + P\sin\theta = 0$ ( From i)

or, $0.45\,(P\cos 40°) + P\sin 40° = 73.575$

or, $0.344\,P + 0.642\,P = 73.575$

or, $0.986\,P = 73.575$

or, $P = 74.61$ N

∴ The smallest value of P is 74.61 N

**12. Two masses $m_1$ = 25 kg and $m_2$ = 15 kg are tied together by a rope parallel to the inclined plane surface as shown in figure. It $\mu_s$ for $m_1$ is 0.25 and that for $m_2$ is 0.5. Find (a) the value of θ for which masses will just start slipping (b) tension in the rope.**

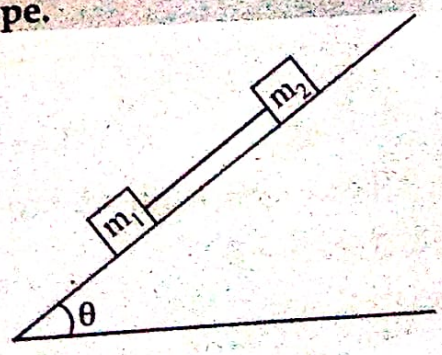


**[2013 Fall, PoU]**



Scanned with CamScanner

**Solution:**

FBD of block $m_1$

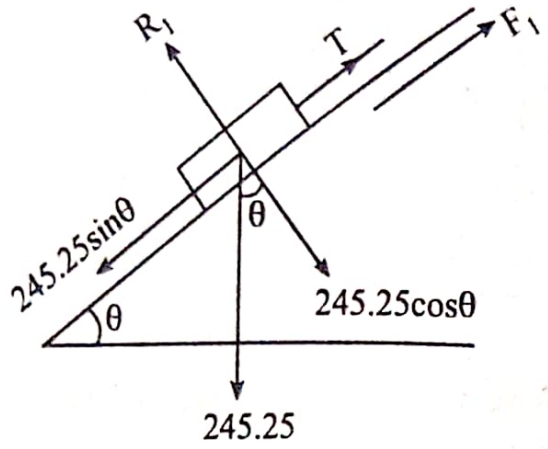


Let, T be the tension on the rope

$(+\nwarrow)\Sigma F_y = 0$ (Forces perpendicular to plane = 0)

or, $R_1 - 245.25\cos\theta = 0$

$\Rightarrow$ $R_1 - 245.25\cos\theta$

$(\nearrow+)\Sigma F_x = 0$ [Forces along the plane = 0]

or, $T + F_1 - 245.25\sin\theta = 0$

or, $T + 0.25\, R_1 - 245.25\sin\theta$

or, $T = 245.25\sin\theta - 0.25\,(245.25\cos\theta)$

$\Rightarrow$ $T = 245.25\sin\theta - 61.31\cos\theta$ .....(i)

**FBD of block ($m_2$)**

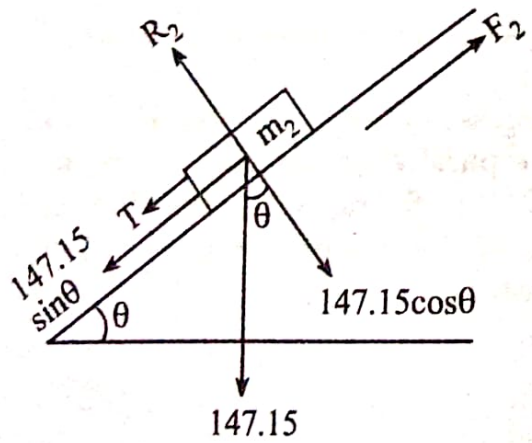


$(+\nwarrow)\Sigma F_y = 0$ [Forces perpendicular to the plane = 0]

or, $R_2 - 147.15\cos\theta = 0$

$\Rightarrow$ $R_2 = 147.15\cos\theta$



Scanned with CamScanner

$(\nearrow +)\Sigma F_x = 0$ [Forces along the plane = 0]

or, $F_2 - T - 147.15\sin\theta = 0$

or, $0.5R_2 - 147.15\sin\theta = T$

or, $T = 0.5\,(147.15\cos\theta) - 147.15\sin\theta$

or, $T = 73.575\cos\theta - 147.15\sin\theta$ .....(ii)

Equating (i) and (ii)

$245.25\sin\theta - 61.31\cos\theta = 73.575\cos\theta - 147.15\sin\theta$

or, $389.4\sin\theta = 134.885\cos\theta$

or, $\tan\theta = 0.34 \Rightarrow \theta = 18.78°$

Subsituting 'θ' in equation (i)

$T = 245.25\sin(18.78°) - 61.31\cos(16.78°) = 20.9N$

**13. Referring the figure shown, determine the least value of the force (P) to cause motion to impend right wards. Assuming the coefficient of friction under the blocks to be 0.2 and consider pulley of negligible mass**

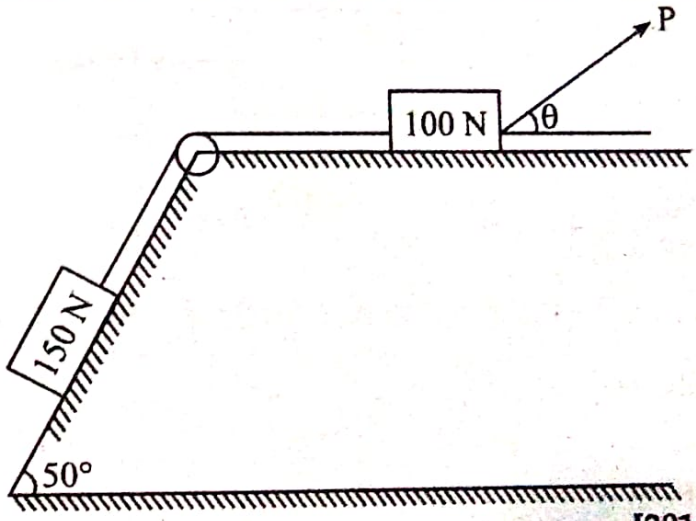


**[2015 Fall, PoU]**

**Solution:**

Let, T be the tension on the rope:

FBD of 150 N block



Scanned with CamScanner

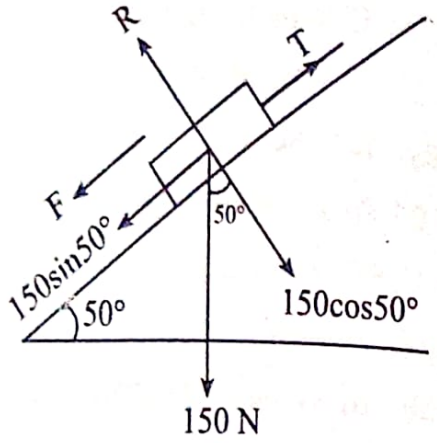


$(+\nwarrow)\Sigma F_y = 0$

or, $R - 150\cos 50° = 0 \Rightarrow R = 96.42$ N

$(\nearrow +)\Sigma F_x = 0$

or, $T - 150\sin 50° - F = 0$

or, $T = 0.2 \times 96.42 + (150\sin 50°) = 134.19$ N

FBD of 100 N block

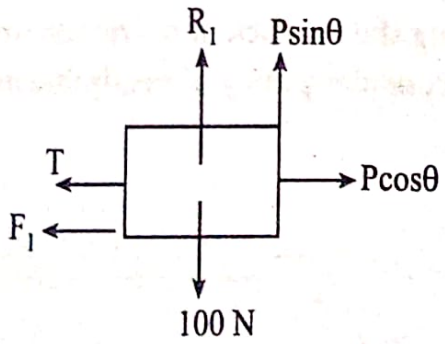


$(+\uparrow)\Sigma F_y = 0$

or, $R_1 - 100 - P\sin\theta = 0 \Rightarrow R_1 = (100 + P\sin\theta)$ .....(i)

$(\overrightarrow{+})\Sigma F_x = 0$

or, $P\cos\theta - T - F_1 = 0$

or, $P\cos\theta - 134.19 - 0.2(100 + P\sin\theta) = 0$

or, $P\cos\theta - 134.19 - 20 - 0.2P\sin\theta = 0$

or $P[\cos\theta - 0.2\sin\theta] = 154.19$

or, $P = \dfrac{154.19}{\cos\theta - 0.2\sin\theta}$ .....(A)

To get the least value of 'P', the term $(\cos\theta - 0.2\sin\theta)$ will be maximum,

So, $\dfrac{d}{d\theta}(\cos\theta - 0.2\sin\theta) = 0$



Scanned with CamScanner

or, $-\sin\theta - 0.2\cos\theta = 0$

or, $\sin\theta = -0.2\cos\theta$

or, $\tan\theta = -0.2$

$\therefore$ $\theta = 11.3°$ [Taking value on positive x-axis]

So, $P = \dfrac{154.19}{\text{cas}11.3° - 0.2\sin 11.3°} = 163.78$ N

**14. A block of mass M = 50 kg rests on a horizontal plane below in figure. Find the magnitude of force (P) required to make block just about to move rightward. The coefficient of static friction between the block and the plane ($\mu_s$) = 0.25**

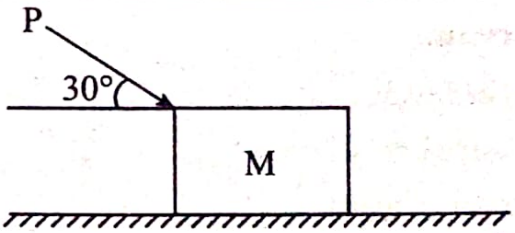


**[2020 spring, PoU]**

**Solution:**

FBD of block is

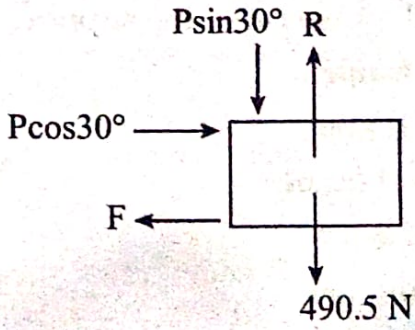


$(+\uparrow)\ \Sigma F_y = 0$

or, $R - P\sin 30° - 490.5 = 0 \Rightarrow R = 490.5 + 0.5P$ .....(i)

$(\overrightarrow{+})\Sigma F_x = 0$

or, $P\cos 30° - F = 0$

or, $0.866P - 0.25R = 0$ [$\because F = \mu R$]

or, $0.866P - 0.25\,(490.5 + 0.5P) = 0$ [$\because$ From equation (i)]

or, $0.866P - 122.625 - 0.125P = 0$

or, $0.741P = 122.625 \Rightarrow P = 165.48$N

$\therefore$ The magnitude of force (P) = 165.48N



Scanned with CamScanner

# ANALYSIS OF BEAMS AND FRAMES

## 6.1 Beams and Frames

A structural member designed to support loads applied at various points along the member is known as a *beam*. In most cases, the loads are perpendicular to the axis of the beam and will cause only shear and bending in the beam. When the loads are not at a right angle to the beam, they will also produce axial forces in the beam.

**Classification of beam:**

i. Cantilever beam
ii. Simply supported beam
iii. Overhanging beam
iv. Fixed beam
v. Continuous beam

A *frame* is a network of beams and columns joined together to carry loads and transfer it to the support.

**Classification of frame:**

i. Perfect frame
ii. Imperfect frame
   - Deficient
   - Redundant

## 6.2 Different Types of Load and Support

### 6.2.1 Types of Load

Loads are classified as:

**i. Point load /concentrated load**

Loads which act on smaller areas are called *concentrated* or *point loads.*

**ii. Uniformly distributed load ( UDL)**

Load which is distributed uniformly along the length of member is called *uniformly distributed load.*



Scanned with CamScanner

iii. **Uniformly varying load (UVL)**

Load that varies along the length of the structure is called *uniformly varying load*. Load variation may be in linear, parabolic, cubic fashion, etc.

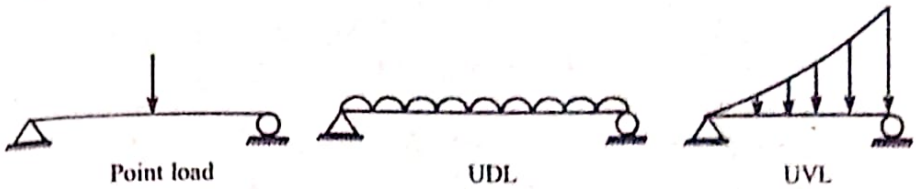


iv. **Couple**

It is the combination of two equal and opposite forces separated by a certain distance.

v. **Moment**

It is the product of force and distance.

vi. **Static and dynamic load**

The loads which do not vary with time are called *static loads* whereas the loads which change with time are *dynamic loads*.

vii. **Imposed load**

*Imposed load* may be defined as the load that is applied to the structure which is not permanent. Examples: Snow load, wind load, earthquake load.

viii. **Dead and live load**

*Dead loads* are the self weight of the structures i.e., self weight of slab, beam, column, finishing loads. Such loads do not change their position.

*Live load* is the load imposed on the structure when it fulfills its design purpose. The position and magnitude of live load may change.

### 6.2.2 Types of Support

Supports are classified as:

i. **Roller support**

It gives rise to one force reaction which is perpendicular to the plane on which it rests.



Scanned with CamScanner

Roller support

- Free to move in x-direction
- Free to rotate about z-direction (axis)
- Degree of freedom = 2

Since it is restrained in y-direction, reaction is developed in this direction only.

ii. **Hinge support**

It gives rise to one force reaction whose direction is unknown and can be resolved into two forces along x and y axes.

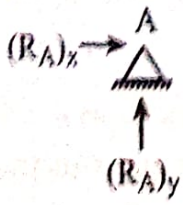


Hinge support

- Free to rotate about z-direction.

  So, its degree of freedom = 1
- Restrained in x and y-direction.

  So, no. of reactions developed = 2

iii. **Fixed support**

It gives rise to one force reaction having two components and one moment reaction.

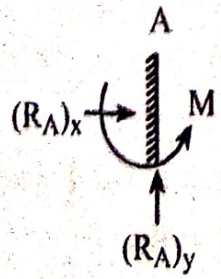


Fixed support



Scanned with CamScanner

- No translation in x and y-direction
- No rotation about z-direction
- Restrained in all three possible directions.

So, degree of freedom = 0

No. of reactions = 3

## 6.3 Axial Force, Shear Force, and Bending Moment

On application of external loads on a structure, following forces are developed:

1. **Axial force**

A force lying along the longitudinal axis of the member which produces either compression or tension is the *axial force*.

Tensile force is positive axial force and compression is negative axial force.

+ve — Tensile axial force

−ve — Compressive axial force

2. **Shear force**

Unbalanced force along the transverse direction is known as *shear force*. Shearing force having an upward direction to the left side of the section is positive or downward force to the right side of the section is positive. The reverse is negative.

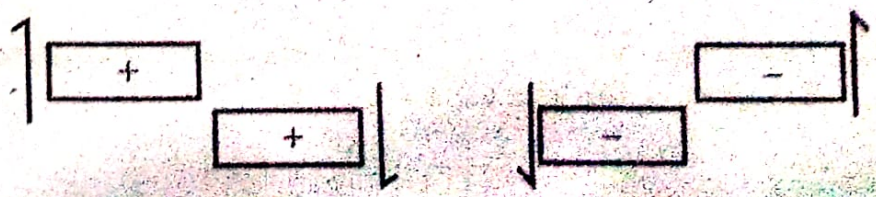


Positive shear force — Negative shear force

3. **Bending moment**

Unbalanced moment of any section is known as *bending moment* for a particular section. Sagging bending moment is taken as +ve while hogging bending moment is taken as −ve.



Scanned with CamScanner

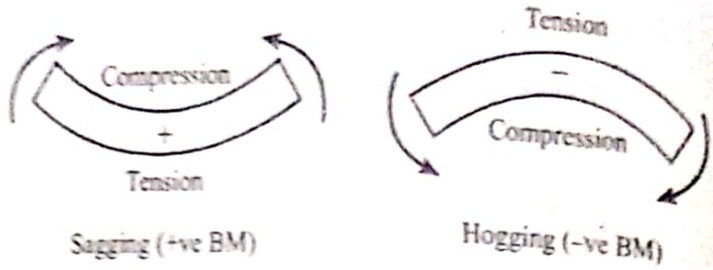


## 6.4 Static Determinacy and Indeterminacy

A structure is said to be *statically determinate* if all the internal member forces and reactions can be determined using the equation of static equilibrium.

**For beam,**

External indeterminacy = r − (3 + c)

Internal indeterminacy = 0

Total degree of static indeterminacy = r − (3+c) + 0 = r − (3+c)

**For frame,**

External indeterminacy = r − (3 + c)

Internal indeterminacy = 3 × total no. of cuts required to have open configuration

Total degree of static indeterminacy = (3m + r) − (3j + c)

*where r = no. of support reactions, c = no. of equations due to special condition (internal hinge), j = no. of joints.*

**Note:** Internal indeterminacy = Total indeterminacy − External indeterminacy

## SOLUTION TO IMPORTANT QUESTIONS

**1. Draw the axial force, shear force and bending moment diagram of the given frame.**

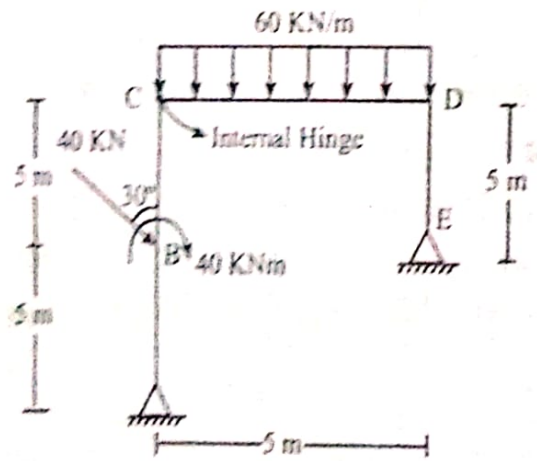




Scanned with CamScanner

*Solution:*

**Calculation of unknown reactions**

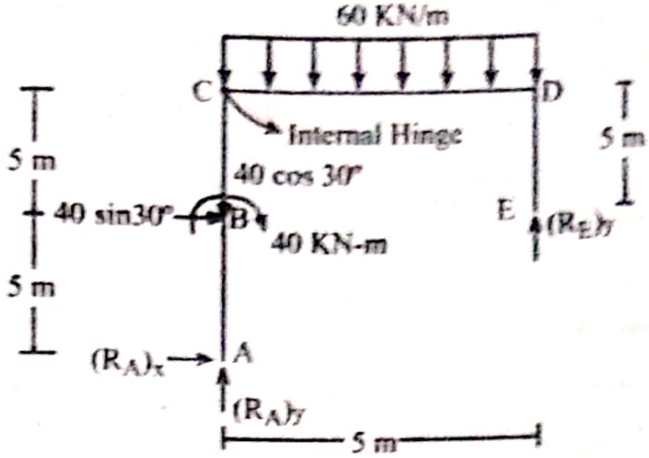


$(\overset{+}{\rightarrow})\ \sum F_x = 0$

or, $40\sin30^\circ + (R_A)_x = 0$

$\therefore (R_A)_x = -40\sin30^\circ = -20KN = 20\ KN\ (\leftarrow)$

$(\uparrow +)\ \sum F_y = 0$

or, $(R_A)_y - 40\cos30^\circ \times 60 \times 5 + (R_E)_y = 0$

$\therefore (R_A)_y + (R_E)_y = 334.64\ KN$ .....(i)

$\circlearrowleft\ \sum M_A = 0$

or, $5 \times 40\sin30^\circ + 40 + 60 \times 5 \times 2.5 - (R_E)_y \times 5 = 0$

$\therefore (R_E)_y = 178\ KN$

From equation (i),

$(R_A)_y = 156.64\ KN$

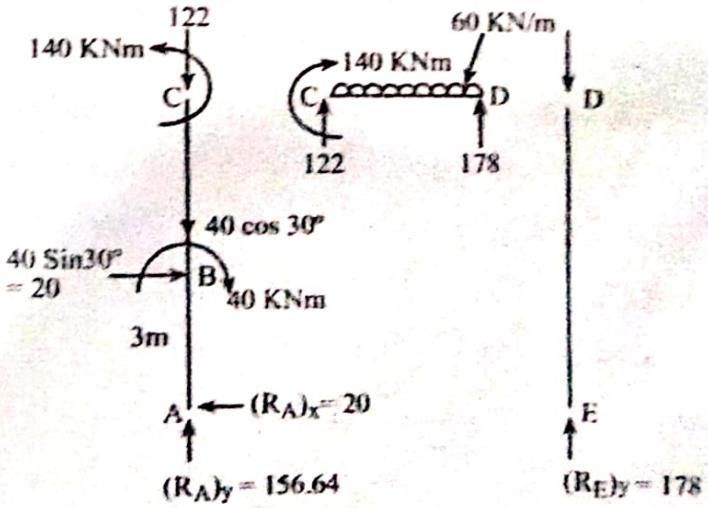




Scanned with CamScanner

**Calculation of axial force**

**Element AC**

$(N_A)_L = 0$

$(N_A)_R = (N_B)_L = -156.64$ KN

$(N_B)_R = -156.64 + 40\cos 30^o = -122$ KN $= (N_C)_L$

$(N_C)_R = -122 + 122 = 0$

**Element CD**

$N_C = N_D = 0$

**Element DE**

$(N_D)_L = 0$

$(N_D)_R = -178 = (N_E)_L$

$(N_E)_R = -178 + 178 = 0$

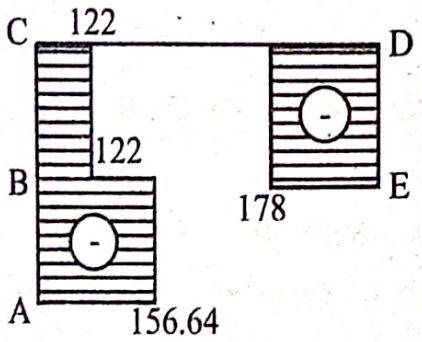


AFD ($\overset{+}{\longleftrightarrow}$, KN)

**Calculation of shear force**

**Element AC**

$(V_A)_L = 0$

$(V_A)_R = 20 = 20$ KN

$(V_B)_L = 20$ KN

$(V_B)_R = 20 - 40\sin 30^o = 0$

$(V_C)_L = (V_B)_R = 0$

$(V_C)_R = (V_C)_L = 0$

**Element CD**

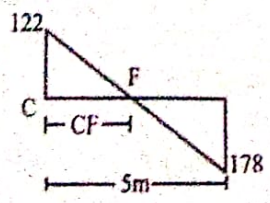




Scanned with CamScanner

Let F be the point of zero S.F.

$$\frac{CF}{122} = \frac{5-CF}{178}$$

or, $178CF = 122 \times 5 - 122CF$

$\therefore CF = 2.033$ m

$(V_C)_L = 0$

$(V_C)_R = 122$ KN

$(V_D)_L = 122 - 60 \times 5 = 122 - 60 \times 5 = -178$ KN

$(V_D)_R = -178 + 178 = 0$

**Element DE**

$(V_D)_L = 0$

$(V_D)_R = 0$

$(V_E)_L = (V_E)_R = 0$

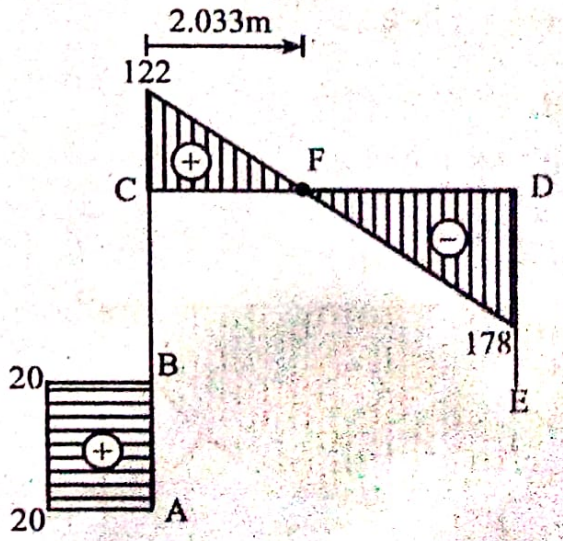


SFD (1+ৱ, KN)

**Calculation of bending moment**

**Element AC**

$M_A = 0$

$(M_B)_L = 20 \times 5 = 100$ KN-m

$(M_B)_R = 100 + 40 = 140$ KN-m

$(M_C)_L = 20 \times 10 + 40 - 20 \times 5 = 140$ KN-m

$(M_C)_R = 140 - 140 = 0$



Scanned with CamScanner

Element CD

$M_C = 140$ KN-m

$M_x = M_c + 122x - 60 \times x \times \frac{x}{2}$

When $x = 0$, $M_C = 140$ KN-m

When $x = 2.033$m (at zero SF point),

$M_{Max/Min} = 140 + 122 \times 2.033 - 60 \times \frac{2.033^2}{2} = 264.033$ KN-m

$\therefore M_{Max} = 264.033$ KN-m

When $x = 2.5$m,

$M_{mid} = 140 + 122 \times 2.5 - 60 \times \frac{2.5^2}{2} = 257.5$ KN-m

When $x = 5$m,

$M_D = 140 + 122 \times 5 - \frac{60 \times 5^2}{2} = 0$

Element DE

$M_D = 0$, $M_E = 0$

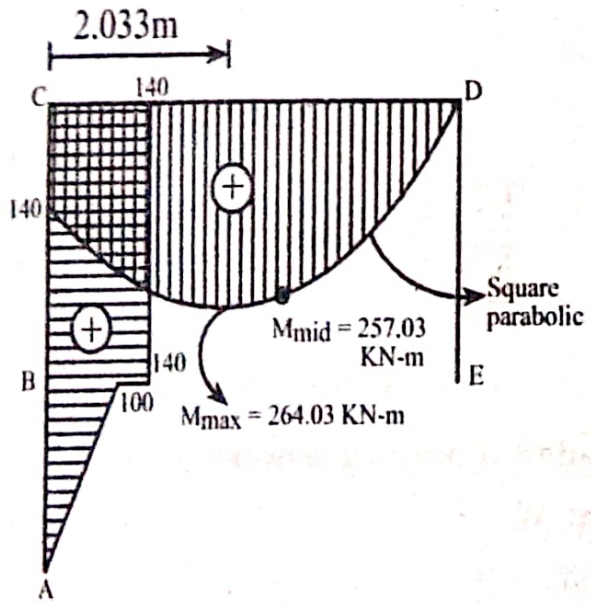


BMD (+, KNm)

**2. Draw axial force, shear force and bending moment diagram for the given frame. Also, indicate salient features, if any.**



Scanned with CamScanner

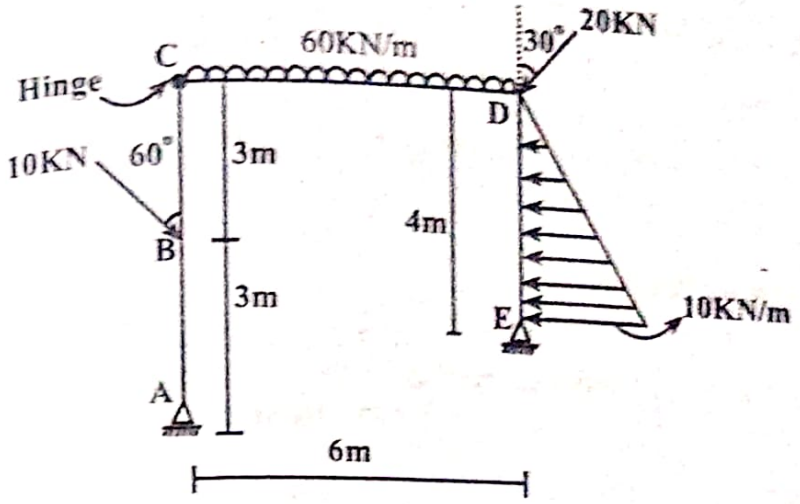


Solution:

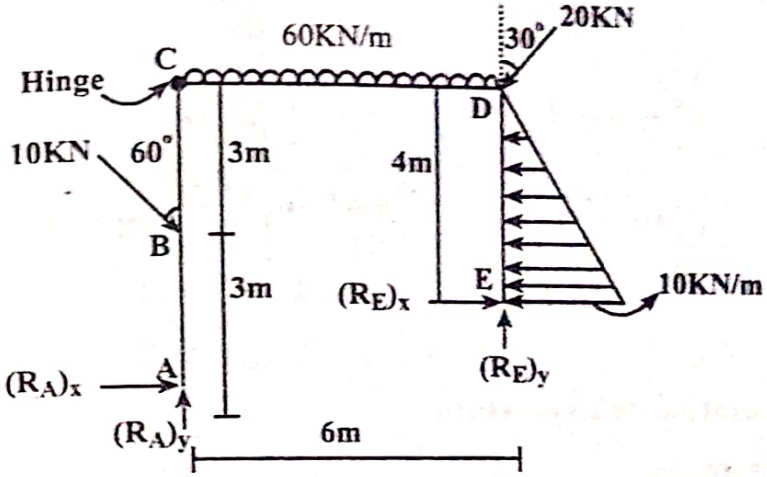


**Calculation of unknown reactions**

$\circlearrowleft^{+}$ $(\Sigma M_C)_{left} = 0$

or, $(R_A)_x \times 6 - 10\sin 60° \times 3 = 0$

or, $(R_A)_x = 4.33$ KN $(\leftarrow)$

$\left(\overset{+}{\rightarrow}\right)$ $\Sigma F_x = 0$

or, $-(R_A)_x + 10\sin 60° - \frac{1}{2} \times 10 \times 4 - 20\sin 30° + (R_E)_x = 0$

or, $(R_E)_x = 25.67$ KN $(\rightarrow)$

$\circlearrowleft^{+}$ $(\Sigma M_A) = 0$

or, $+ 10 \sin 60° \times 3 + 5 \times 6 \times 3 + 20 \cos 30° \times 6 - 20 \sin 30° \times 6 -$

$(R_F)_y \times 6 + (R_E)_x \times 2 - \left(\frac{1}{2} \times 10 \times 4\right) \times \left(2 + \frac{1}{3} \times 4\right) = 0$



Scanned with CamScanner

or, $(R_E)_y = 24.10$ KN (↑)

$(+\uparrow)\Sigma F_y = 0$

or, $(R_A)_y - 10\cos 60° - 5\times 6 - 20\cos 30° + (R_E)_y = 0$

or, $(R_A)_y = 28.22$ KN (↑)

**Balancing of frame**

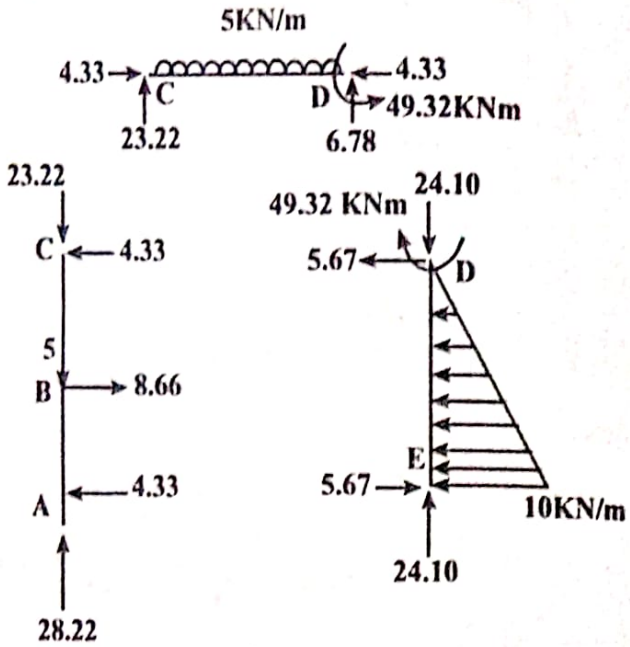


**Calculation of axial force**

**Element AC**

$(N_A)_L = 0$

$(N_A)_R = -28.22 = 28.22$ KN (C) $= (N_B)_L$

$(N_B)_R = -28.22 + 5 = -23.22 = 23.22$ KN (C) $= (N_C)_L$

$(N_C)_R = -23.22 + 23.22 = 0$

**Element CD**

$(N_C)_L = 0$

$(N_C)_R = (N_D)_L = -4.33$

$(N_D)_R = -4.33 + 4.33 = 0$

**Element DE**

$(N_D)_L = 0$

$(N_D)_R = -24.10 = (N_E)_L$

$(N_E)_R = -24 + 24.10 \approx 0$



Scanned with CamScanner

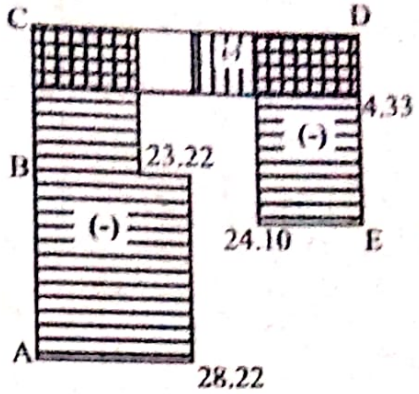


AFD (+, KN)

**Calculation of shear force**

**Element AC**

$(V_A)_L = 0$

$(V_A)_R = 4.33 = (V_B)_L$

$(V_B)_R = 4.33 - 8.66 = -4.33$ KN $= (V_C)_L$

$(V_C)_R = -4.33 + 4.33 = 0$ KN

**Element CD**

$V_x = 23.22 - 5x \quad (0 \le x \le 6)$ (origin at C)

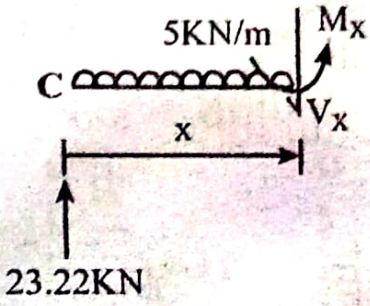


$(V_C)_L = 0$

At $x = 0$, $(V_C)_R = 23.22$

At $x = 6$, $(V_D)_L = 23.22 - 5 \times 6 = -6.78$KN

$(V_D)_R = -6.78 + 6.78 = 0$ KN

To know where $V_x = 0$, we write

$V_x = 23.22 - 5x$

or, $0 = 23.22 - 5x$

$$\therefore x = \frac{23.22}{5} = 4.644 \text{ m}$$



Scanned with CamScanner

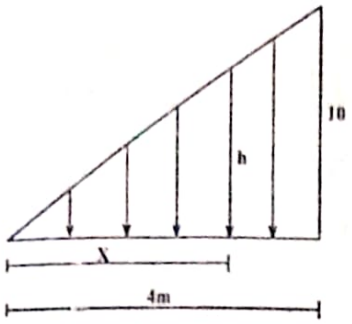


$\frac{h}{x} = \frac{10}{4}$ or, h = 2.5x

**Element DE**

$V_x = -5.67 - \frac{1}{2} \times x \times h = -5.67 - \frac{1}{2} \times 2.5x \times x = -5.67 - 1.25\ x^2$

$(0 \le x \le 4)$ (origin at D)

$V_x = 0$ is not possible as x comes out to be imaginary

$(V_D)_L = 0$

When x =0, $(V_D)_R$ = -5.67 KN

When x = 4, $(V_E)_L = -5.67 - 1.25 \times 4^2 = -25.67$ KN

$(V_E)_R = -25.67 + 25.67 = 0$ KN

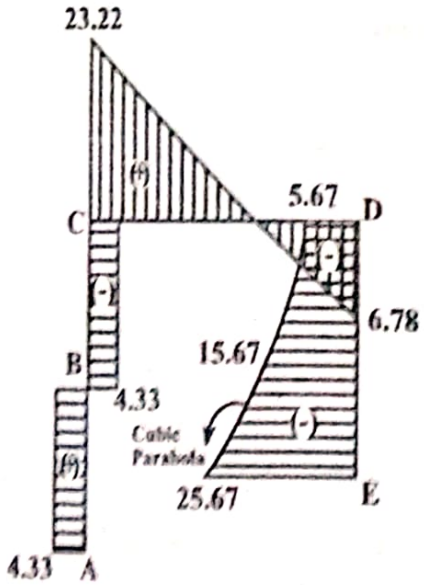


SFD (1+L, KN)

**Calculation of bending moment**

**Element AC**

$M_A = 0$

$M_B = 4.33 \times 3 = 12.99$

$M_C = 4.33 \times 6 - 8.66 \times 3 = 0$



Scanned with CamScanner

**Element CD**

$M_x = 23.22x - 5 \times x \times \frac{x}{2} = 23.22x - 2.5x^2 (0 \le x < 6)$ (origin at C)

$M_x = 0$ gives $23.22x - 2.5x^2 = 0$

$\Rightarrow x = 9.28$m and 0m

Since x = 6 is beam span, x = 9.28 m is not possible.

$M_{max}$ occurs at position where $V_x = 0$ i.e., at x = 4.644m

$\therefore M_{max} = M_{x=4.644} = 23.22 \times 4.644 - 2.5 \times 4.644^2 = 53.92$ KNm

At x =0, $M_C = 0$

At x = 3, $M_{mid} = 23.22 \times 3 - 2.5 \times 3^2 = 47.16$ KNm

At x = 6, $(M_D)_L = 23.22 \times 6 - 2.5 \times 6^2 = 49.32$ KNm

$(M_D)_R = 49.32 - 49.32 = 0$

**Element DE**

$M_x = 49.32 - 5.67x - \left(\frac{1}{2} \times 2.5x \times x\right) \times \frac{1}{3} \times x = 49.32 - 5.67x - \frac{2.5x^3}{6}$

When x = 0, $M_D = 49.32$ KNm

When x = 2, $M_{mid} = 49.32 - 5.67 \times 2 - \frac{2.5 \times 2^3}{6} = 34.65$ KNm

When x = 4, $M_E = 49.32 - 5.67 \times 4 - \frac{2.5 \times 4^3}{6} \approx 0$

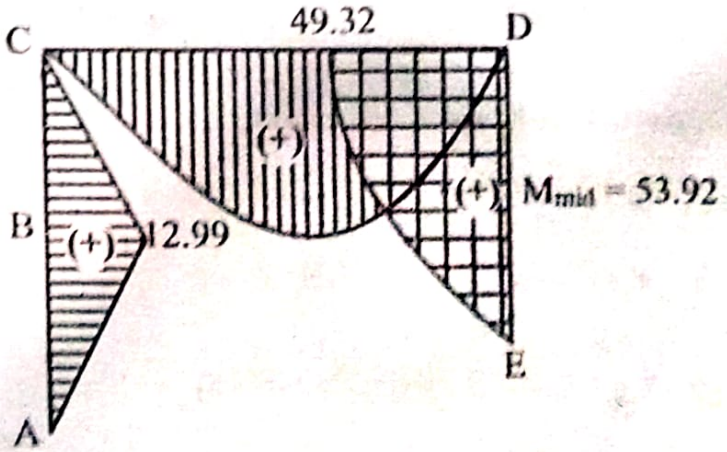


BMD (+, KNm)



Scanned with CamScanner

3. A frame is loaded as shown in the figure. Draw AFD,SFD, and BMD. Also show the salient features of each diagram.

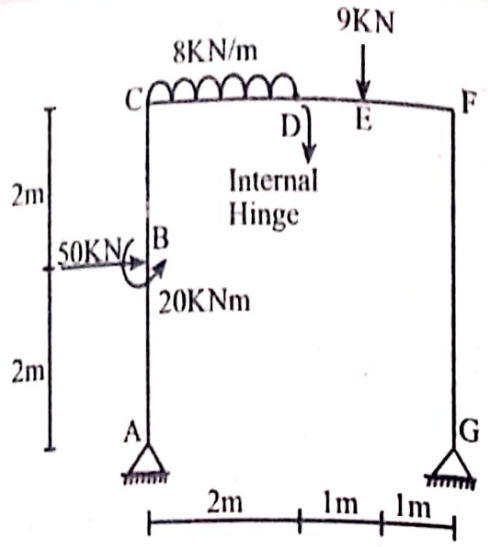


**Solution:**

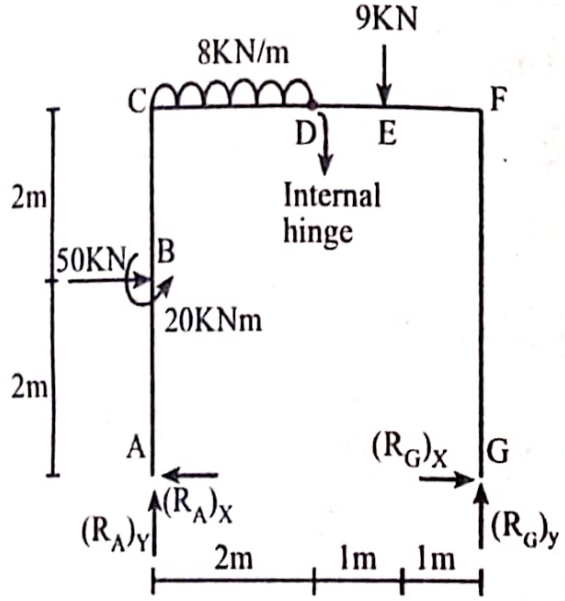


**Calculation of unknown reactions**

$(\circlearrowleft +)\Sigma M_G = 0$

or, $(R_A)_y \times 4 + 50 \times 2 - 20 - \times 2 \times 3 - 9 \times 1 = 0$

or, $(R_A)_y = \frac{-23}{4} = -5.75KN = 5.75\ KN\ (\downarrow)$

$(+\uparrow)\Sigma F_y = 0$

or, $(R_A)_y + (R_G)_y - 9 - 8 \times 2 = 0$

or, $(R_G)_y = 9 + 16 + 5.75 = 30.75\ KN\ (\uparrow)$



Scanned with CamScanner

Since D is an internal hinge,

$(\overset{+}{\circlearrowleft})\Sigma(M_D)_{right} = 0$

or, $-(R_G)_y \times 2 + 9 \times 1 - (R_G)_x \times 4 = 0$

or, $(R_G)_x = \left(\dfrac{-30.75 \times 2 + 9 \times 1}{4}\right) = -13.125 = 13.125$ KN $(\leftarrow)$

$(\overset{+}{\rightarrow})\ \Sigma F_x = 0$

or, $-(R_A)_x + (R_G)_x + 50 = 0$

or, $-(R_A)_x - 13.125 + 50 = 0$

or, $(R_A)_x = 36.375$ KN $(\leftarrow)$

**Balancing of frame**

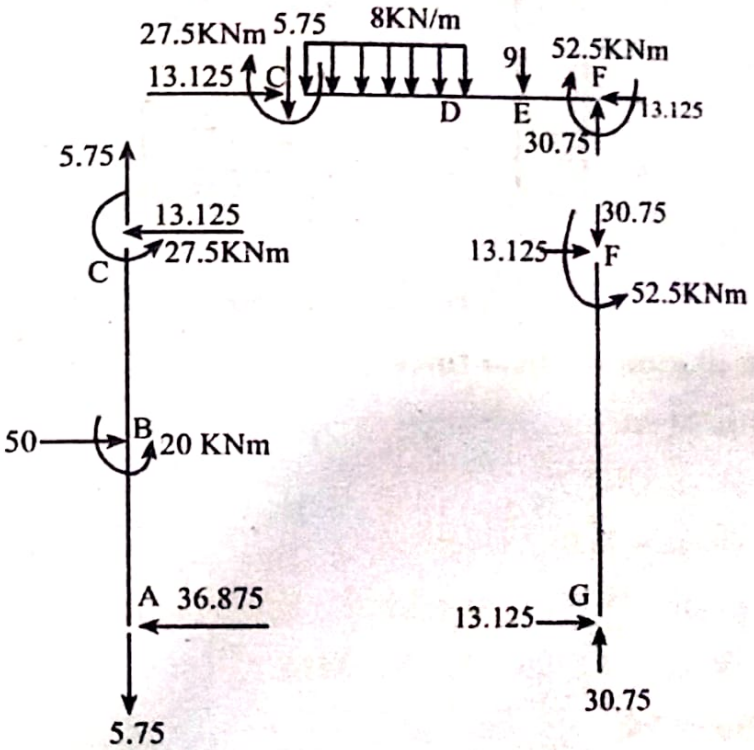


**Calculation of axial force**

**Element AC**

$(N_A)_L = 0,\ (N_A)_R = 5.75 = 5.75$ KN (T) $= N_B = (N_C)_L$

$(N_C)_R = 5.75 - 5.75 = 0$



Scanned with CamScanner

**Element CF**

$(N_C)_L = 0,$

$(N_C)_R = -13.125 = 13.125KN\ (C) = N_D = N_E = (N_F)_L$

$(N_F)_R = -13.125 + 13.125 = 0\ KN$

**Element FG**

$(N_F)_L = 0\ ,\ (N_F)_R = -30.75 = 30.75\ KN\ (C) = (N_G)_L$

$(N_G)_R = -30.75 + 30.75 = 0$

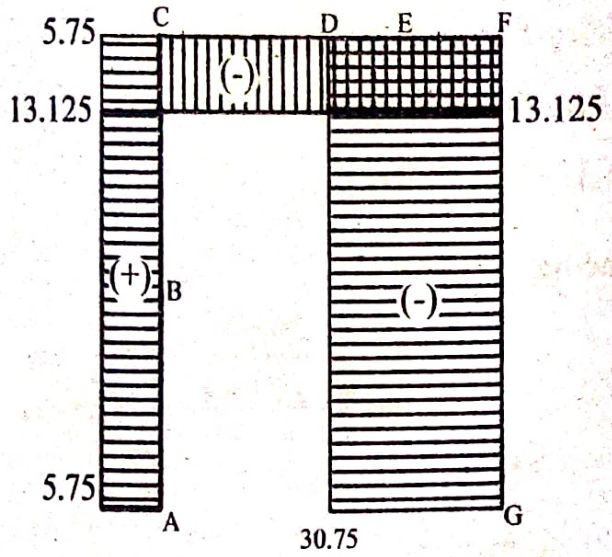


AFD ($\xleftarrow{+}$, KN)

**Calculation of shear force**

**Element AC**

$(V_A)_L = 0$

$(V_A)_R = 36.875\ KN = (V_B)_L$

$(V_B)_R = 36.875 - 50 = -13.125\ KN = (V_C)_L$

$(V_C)_R = -13.125 + 13.25 = 0KN$

**Element CF**

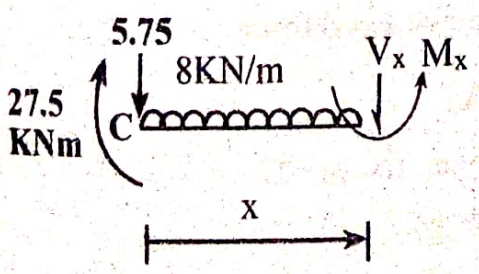




Scanned with CamScanner

**Portion CD**

$V_x = -5.75 - 8x$

For location of a point where S.F. is zero

$V_x = 0$

or, $-5.75 - 8x = 0$

$\therefore x = -0.72m$ (which is not within the span CF,so it is neglected)

$(V_C)_L = 0$

When $x = 0$, $(V_C)_R = -5.75KN$

When $x = 2$, $V_D = -5.75 - 8 \times 2 = -21.75$ KN

**Portion DF**

$V_D = (V_E)_L = -21.75$ KN

$(V_E)_R = -21.75 - 9 = -30.75KN = (V_F)_L$

$(V_F)_R = -30.75 + 30.75 = 0$ KN

**Element FG**

$(V_F)_L = 0$ KN

$(V_F)_R = 13.125$ KN $= (V_G)_L$

$(V_G)_R = 13.125 - 13.125 = 0$

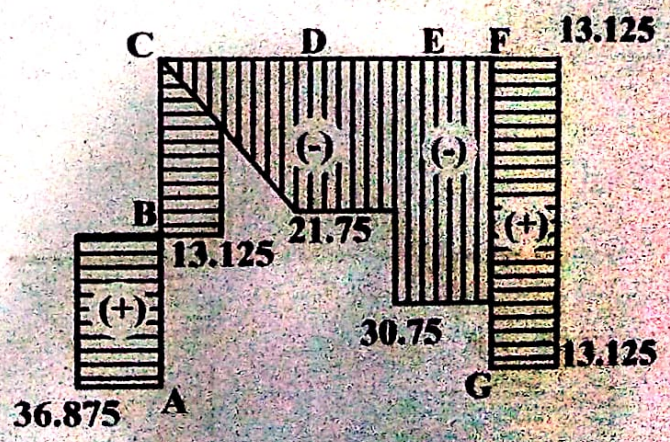


SFD (1+l, KN)

**Calculation of bending moment**

**Element AC**

$M_A = 0$

$(M_B)_L = 36.875 \times 2 = 73.75$ KNm



Scanned with CamScanner

$(M_B)_R = 73.75 - 20 = 53.75$ KNm

$(M_C)_L = 36.375 \times 4 - 20 - 50 \times 2 = 27.5$ KNm

$(M_C)_R = 27.5 - 27.5 = 0$ KNm

**Element CF**

**Portion CD**

$(M_C) = 0$

$(M_C)_R = 27.5$ KNm

$M_D = -5.75 \times 2 - 8 \times 2 \times 1 + 27.5 = 0$

(OK since D is an internal hinge)

$M_{mid} = -5.75 \times 1 + 27.5 - 8 \times 1 \times 0.5 = 17.75$ KNm

**Portion DF**

$M_D = 0$

$M_E = -5.75 \times 3 - 8 \times 2 \times 2 + 27.5 = 21.75$ KNm

$(M_F)_L = -5.75 \times 4 - 8 \times 2 \times 3 - 9 \times 1 + 27.5 = -52.5$ KNm

$(M_F)_R = -52.5 + 52.5 = 0$

**Element FG**

$(M_F)_L = 0$

$(M_F)_R = -52.5$ KNm

$M_G = -52.5 + 13.125 \times 4 = 0$

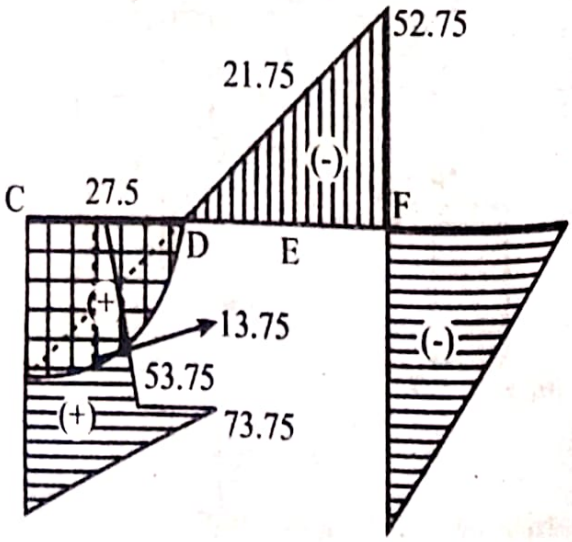


BMD ((+), KNm)



Scanned with CamScanner

4. **Draw shear force and bending moment diagram in the beam.**

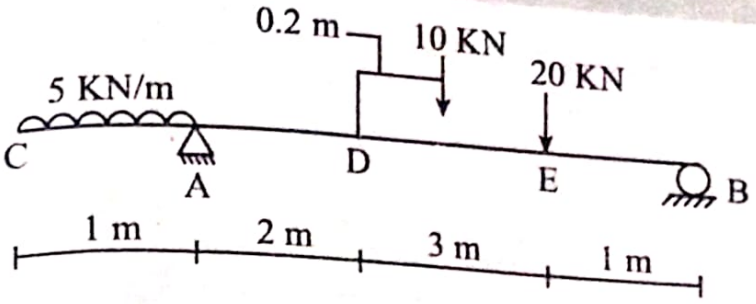


**[2019 Fall, PoU]**

**Solution:**

The figure can be drawn as:

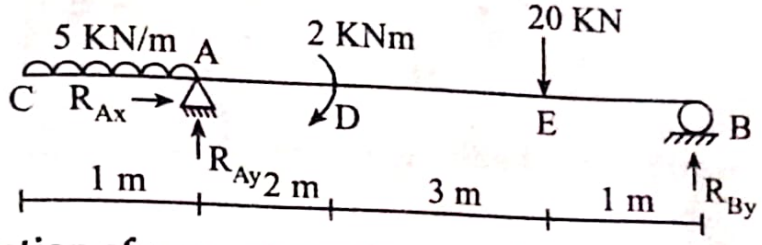


**Calculation of support reactions:**

$(\overset{+}{\rightarrow})\ \Sigma F_x = 0$

or, $R_{Ax} = 0$

$(\circlearrowleft +) M_B = 0$

or, $R_{Ay} \times 6 - 5 \times 1 \times \left[\frac{1}{2} + 6\right] + 2 - 20 \times 1 = 0$

or, $6R_{Ay} - 32.5 + 2 - 20 = 0$

or, $R_{Ay} = 8.416$ KN

$(+\uparrow)\ \Sigma F_y = 0$

or, $R_{Ay} + R_{By} - 20 - 5 \times 1 = 0$

or, $0.416 + R_{By} - 25 = 0$

or, $R_{By} = 16.584$ KN

**Calculation of shear force** $\uparrow$ +ve $\downarrow$

$V_C = 0$

$(V_A)_L = -5 \times 1 = -5$ KN

$(V_A)_R = 8.416 - 5 \times 1 = 3.416$ KN



Scanned with CamScanner

$V_D = -5 \times 1 + 8.416 = 3.416$ KN

$(V_E)_L = 3.416$ KN

$(V_E)_R = -3.416 - 20 = -16.584$ KN

$(V_B)_L = -16.584$ KN

$(V_B)_R = -16.584 + 16.584 = 0$

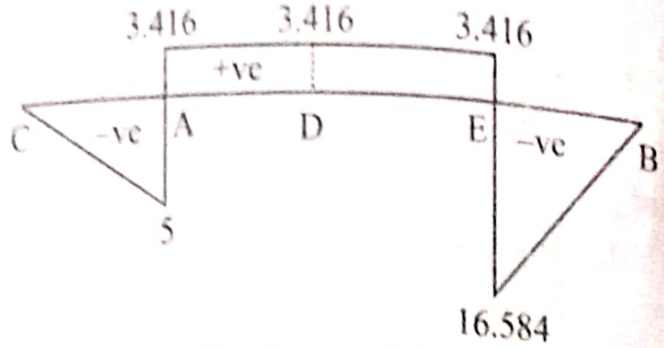


SFD (↑ +ve ↓), KN

**Calculation of bending moment** (↻ +ve ↺)

$M_C = 0$

$M_A = -5 \times 1 \times 0.5 = -2.5$ KNm

$(M_D)_L = -5 \times 1 \times (0.5 + 2) + 8.416 \times 2 = 4.332$ KNm

$(M_D)_R = 4.332 + 2 = 6.332$ KNm

$M_E = -5 \times 1 \times (0.5 + 5) + (8.416 \times 5) + 2 = 16.584$ KNm

$M_B = -5 \times 1 \times (0.5 + 6) + (8.416 \times 6) + 2 - 20 \times 1 = 0$

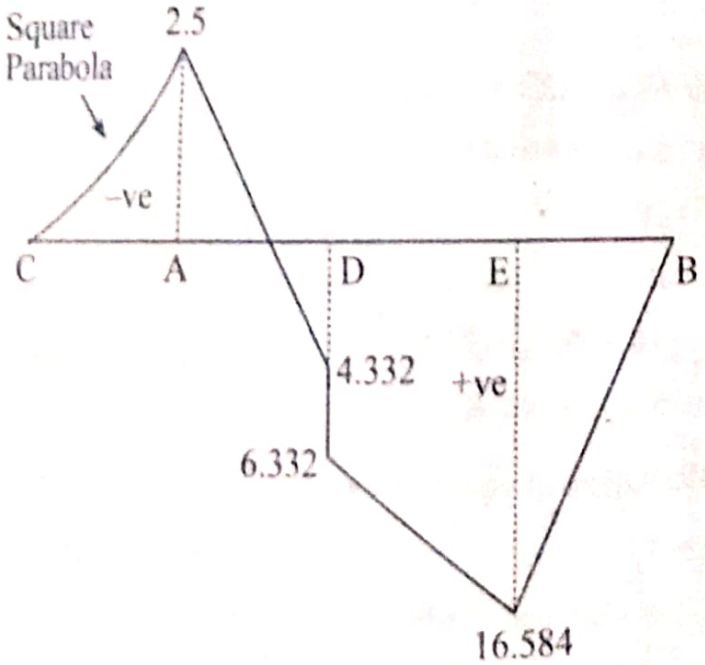


BMD ((↻ +ve ↺))



Scanned with CamScanner

5. **Draw the shear force and bending moment diagram of the beam as shown in figure. Show point of contra flexure, point of zero shear if any.**

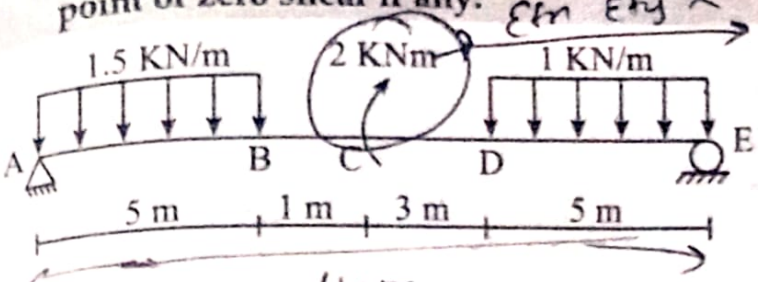


**[2016 Fall, PoU]**

**Solution:**

**Calculation of support reactions:**

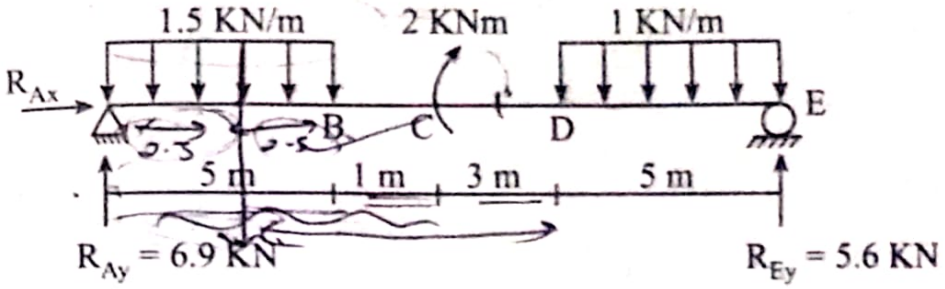


$(\overset{+}{\rightarrow})\ \Sigma F_x = 0$

or, $R_{Ax} = 0$

$\Sigma M_A\ (+\circlearrowleft) = 0$

or, $R_{Ey} \times 14 - 1 \times 5 \times (5/2 + 9) - 2 - 1.5 \times 5 \times 2.5 = 0$

or, $R_{Ey} = 5.6$ KN

$(+\uparrow)\ \Sigma F_y = 0$

or, $R_{Ay} + R_{Ey} - 1.5 \times 5 - 1 \times 5 = 0$

or, $R_{Ay} = 6.9$ KN

**Calculation of shear force** ↑+ve↓

$(V_A)_L = 0$

$(V_A)_R = 6.9$ KN

$V_B = 6.9 - 1.5 \times 5 = -0.6$ KN

$V_C = -0.6$ KN

$V_D = -0.6$ KN

$(V_E)_L = 6.9 - (1.5 \times 5) - (1 \times 5) = -5.6$ KN

$(V_E)_R = -5.6 + 5.6 = 0$



Scanned with CamScanner

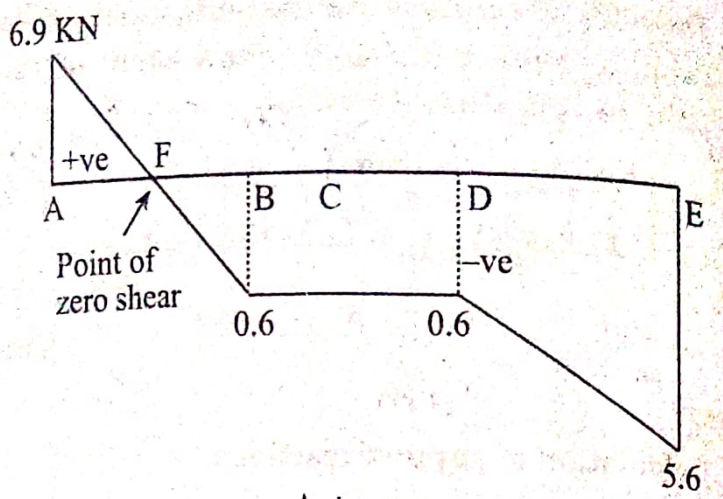


SFD (↑+ve↓)

Let F be the point of zero shear.

So, 'x' be the distance of F from A

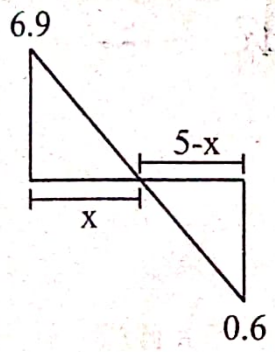


$$\frac{6.9}{x} = \frac{0.6}{5-x}$$

or, $x = 4.6$ m

∴ The point of zero shear occurs at 4.6 m from left support A.

**Calculation of bending moment (↻+ve↺)**

$M_A = 0$

$M_B = 6.9 \times 5 - (1.5 \times 5 \times 2.5) = 15.75$ KNm

$(M_C)_L = 6.9 \times 6 - [1.5 \times 5 \times (2.5 + 1)] = 15.15$ KNm

$(M_C)_R = 15.15 + 2 = 17.15$ KNm

$M_D = 6.9 \times 9 - [1.5 \times 5 \times (2.5 + 4)] + 2 = 15.35$ KNm

$M_E = 6.9 \times 14 - [1.5 \times 5 \times (2.5 + 9)] + 2 - (1 \times 5 \times 2.5) \approx 0$



Scanned with CamScanner

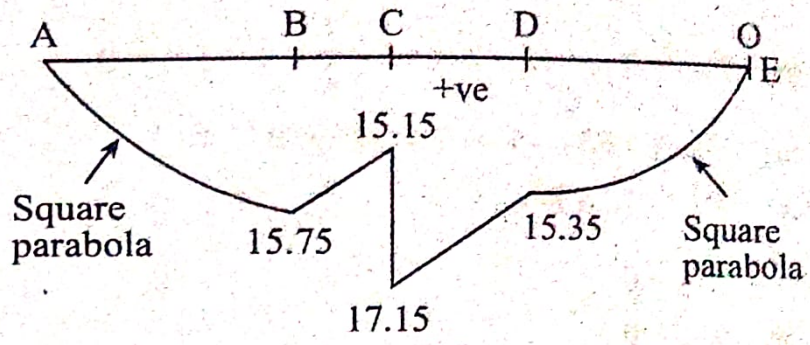


[In case of UDL, square parabola curve exist in BMD. The curve has to be checked whether it is upward or downward]

**6. Draw shear force diagram and bending moment diagram for a given beam. Also locate point of contra-flexure if any.**

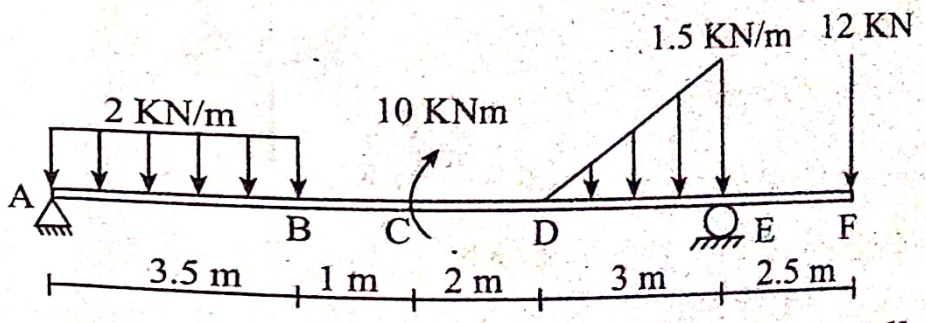


**[2017 Fall, PoU]**

**Solution:**

**Calculation of support reactions:**

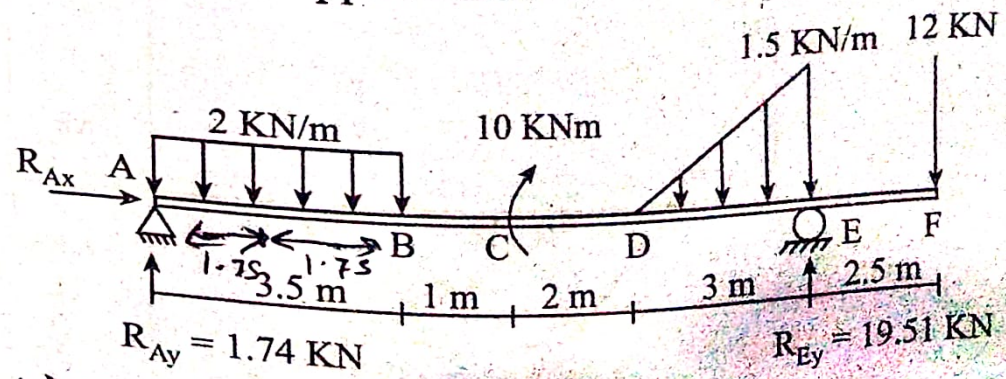


$(+\circlearrowleft)\ \Sigma M_A = 0$

or, $-12 \times 12 + R_{Ey} \times 9.5 - \frac{1}{2} \times 3 \times 1.5 \times (\frac{2}{3} \times 3 + 6.5) - 10 - 2 \times 3.5 \times \frac{3.5}{2} = 0$

or, $R_{Ey} = 19.51$ KN

$(+\uparrow)\ \Sigma F_y = 0$



Scanned with CamScanner

or, $R_{Ay} + R_{Ey} - 12 - 2 \times 3.5 - \frac{1}{2} \times 3 \times 1.5 = 0$

or, $R_{Ay} + 19.51 - 12 - 7 - 2.25 = 0$

or, $R_{Ay} = 1.74$ KN

$(\overset{+}{\rightarrow})\ \Sigma F_x = 0$

or, $R_{Ax} = 0$

**Calculation of shear force** $\uparrow$ +ve $\downarrow$

$(V_A)_L = 0$

$(V_A)_R = 1.74$ KN

$V_B = 1.74 - 2 \times 3.5 = -5.26$ KN

$V_C = -5.26$ KN

$V_D = -5.26$ KN

$(V_E)_L = -5.26 - \frac{1}{2} \times 3 \times 1.5 = -7.51$ KN

$(V_E)_R = -7.51 + 19.51 = 12$ KN

$(V_F)_L = 12$ KN

$(V_F)_R = 12 - 12 = 0$

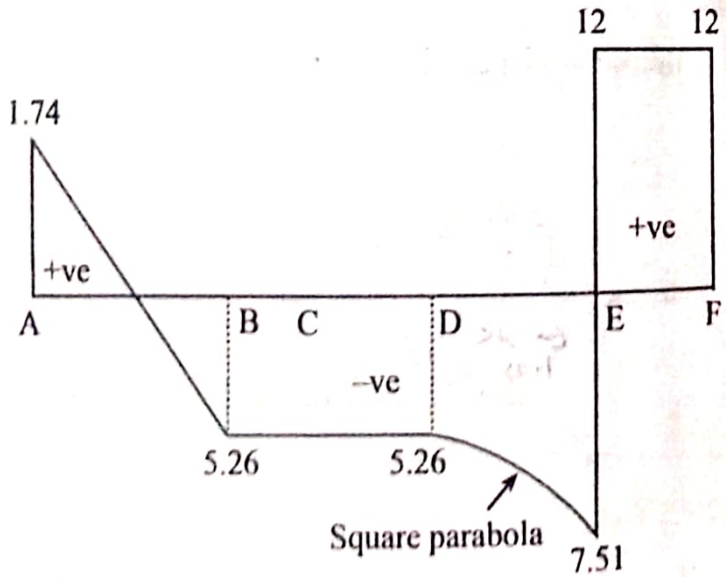


SFD [↑ +ve ↓]

**Calculation of bending moment** ↺ +ve ↻

$M_A = 0$

$M_B = 1.74 \times 3.5 - 2 \times 3.5 \times \frac{3.5}{2} = -6.16$ KNm



Scanned with CamScanner

$$(M_C)_L = 1.74 \times 4.5 - 2 \times 3.5 \times \left[\frac{3.5}{2} + 1\right] = -11.42 \text{ KNm}$$

$$(M_C)_R = 11.42 + 10 = -1.42 \text{ KNm}$$

$$M_D = 1.74 \times 6.5 - \left[2 \times 3.5 \times \left(\frac{3.5}{2} + 3\right)\right] + 10 = -11.94 \text{ KNm}$$

$$M_E = 1.74 \times 9.5 - \left[2 \times 3.5 \times \left(\frac{3.5}{2} + 6\right)\right] + 10 - \frac{1}{2} \times 3 \times 1.5 \times \left(\frac{1}{3} \times 3\right) = -30 \text{ KNm}$$

$$M_F = 1.74 \times 12 \left[2 \times 3.5 \times \left(\frac{3.5}{2} + 8.5\right)\right] + 10 - \frac{1}{2} \times 3 \times 1.5 \times \left(\frac{1}{3} \times 3 + 2.5\right) + 19.51 \times 2.5 = 0$$

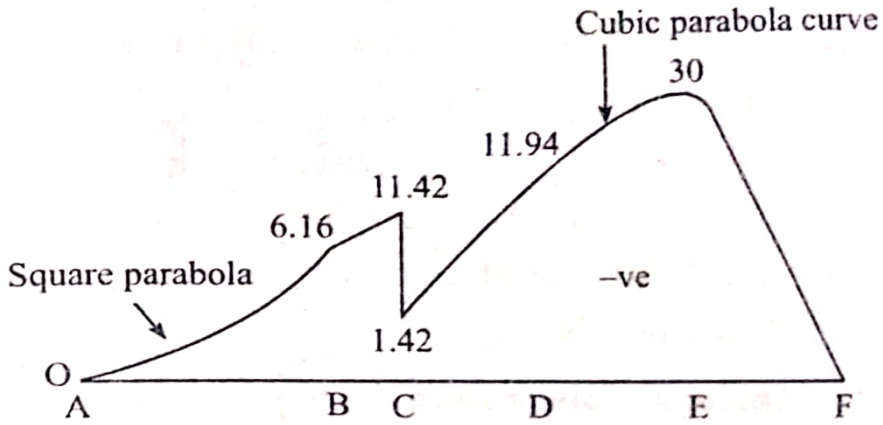


[Note: In case of UDL, square parabola curve exist and in case of UVL, cubic parabola curve exist in drawing BMD. The curve has to be checked whether it is concave upward or downward]

⇒ There is no any point for contraflexure

7. **Plot the shear and bending moment diagrams for the beam loaded with both the distributed and point loads. What are the values of shear and moment at x = 6 m?**

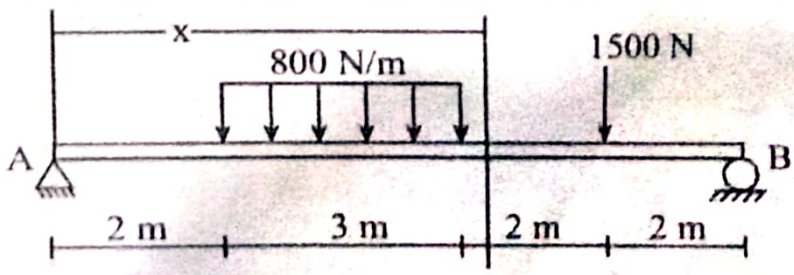


**[2018 Fall, PoU]**



Scanned with CamScanner

**Solution:**

**Calculation of support reactions:**

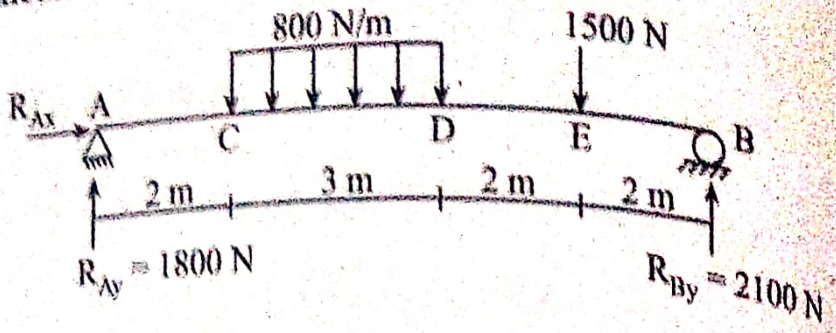


$(\overset{+}{\rightarrow})\ \Sigma F_x = 0$

or, $R_{Ax} = 0$

$(+\circlearrowleft)\ \Sigma M_A = 0$

or, $R_{By} \times 9 - 1500 \times 7 - 800 \times 3 \times [3/2 + 2] = 0$

or, $R_{By} = 2100$ N

$(\uparrow +)\ \Sigma F_y = 0$

or, $R_{Ay} + R_{By} - 1500 - (800 \times 3) = 0$

or, $R_{Ay} + 2100 - 3900 = 0$

or, $R_{Ay} = 1800$ N

**Calculation of shear force** $\uparrow$ +ve $\downarrow$

$(V_A)_L = 0$

$(V_A)_R = 1800$ N

$V_C = 1800$ N

$V_D = 1800 - (800 \times 3) = -600$ N

$(V_E)_L = 1800 - (800 \times 3) = -600$ N

$(V_E)_R = -600 - 1500 = -2100$ N

$(V_B)_L = -2100$ N

$(V_B)_R = -2100 + 2100 = 0$

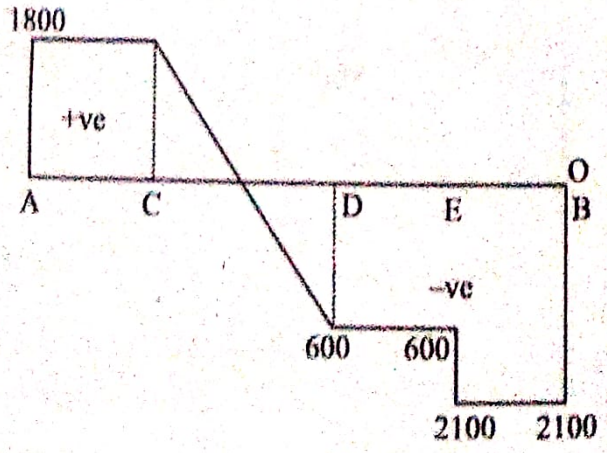




Scanned with CamScanner

SFD [↑ +ve ↓]

**Calculation of bending moment (↺ +ve ↻)**

$M_A = 0$

$M_C = 1800 \times 2 = 3600$ Nm

$M_D = 1800 \times 5 - (800 \times 3 \times 1.5) = 5400$ Nm

$M_E = 1800 \times 7 - [800 \times 3 \times (1.5 + 2)] = 4200$ Nm

$M_B = 1800 \times 9 - [800 \times 3 \times (1.5 + 4)] - 1500 \times 2 = 0$

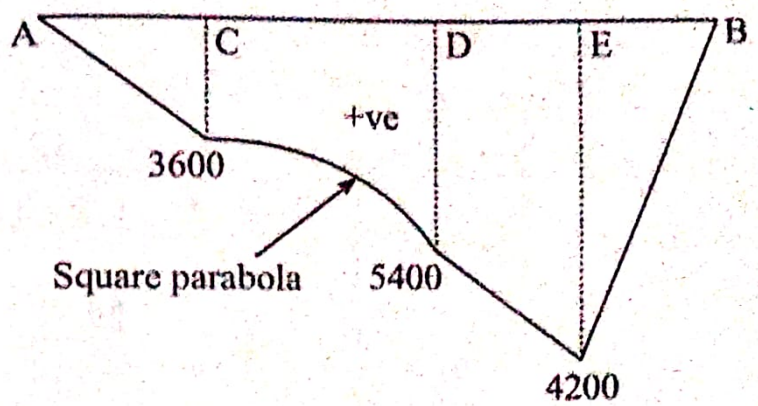


Shear force at 6m from A = 1800 – [800 × 3]

= –600 N

Bending moment at 6m from A

= 1800 × 6 – [(800 × 3) × (1.5 + 1)] = 4800 Nm

**8. Draw SFD and BMD for the beam loaded as in figure.**

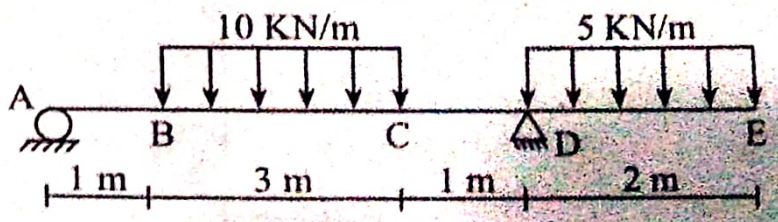


**[2019, PU]**

**Solution:**

**Calculation of support reactions:**

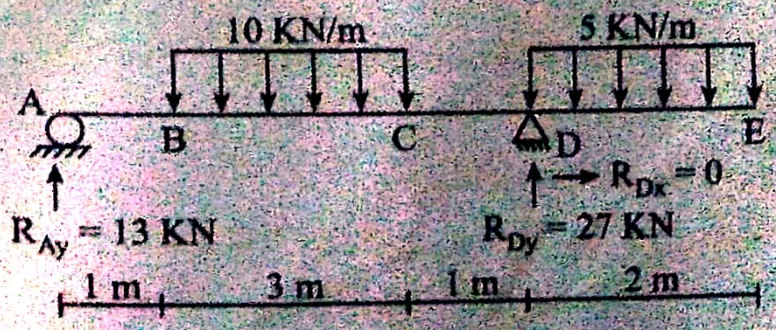




Scanned with CamScanner

$(\xrightarrow{+}) \Sigma F_x = 0$

or, $R_{Dx} = 0$

$(\circlearrowleft +) \Sigma M_A = 0$

or, $R_{Dy} \times 5 - (10 \times 3 \times (1.5 + 1)) - 5 \times 2 \times (2/2 + 5) = 0$

or, $5R_{Dy} - 75 - 60 = 0$

or, $R_{Dy} = 27$ KN

$(\uparrow +) \Sigma F_y = 0$

or, $R_{Ay} + R_{Dy} - (10 \times 3) - (5 \times 2) = 0$

or, $R_{Ay} + 27 - 30 - 10 = 0$

or, $R_{Ay} = 13$ KN

**Calculation of shear force** $\uparrow$ +ve $\downarrow$

$(V_A)_L = 0$

$(V_A)_R = 13$ KN

$V_B = 13$ KN

$V_C = 13 - (10 \times 3) = -17$ KN

$(V_D)_L = -17$ KN

$(V_D)_R = -17 + 27 = 10$ KN

$V_E = 10 - (5 \times 2) = 0$

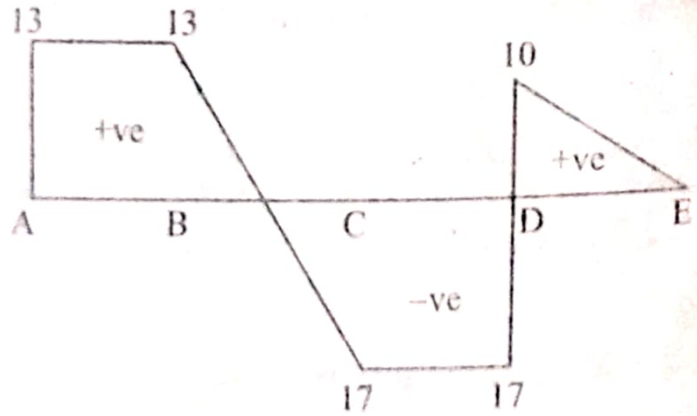


**Calculation of bending moment** (↻ +ve ↺)

$M_A = 0$

$M_B = 13 \times 1 = 13$ KNm

$M_C = 13 \times 4 - (10 \times 3 \times (1.5)) = 7$ KNm

$M_D = 13 \times 5 - [10 \times 3 \times (1.5 + 1)] = -10$ KNm



Scanned with CamScanner

$$M_E = 13 \times 7 - [10 \times 3 \times (1.5 + 3)] + 27 \times 2 - 5 \times 2 \times \frac{2}{2} = 0$$

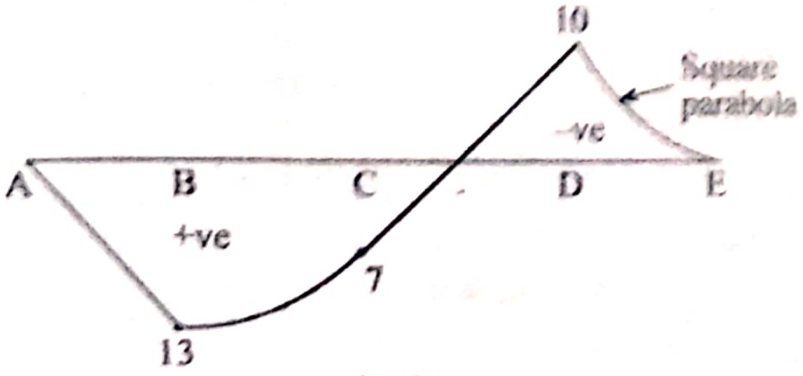


BMD ((+ve))

9. **Draw the shear force diagram and bending moment diagram of given beam.**

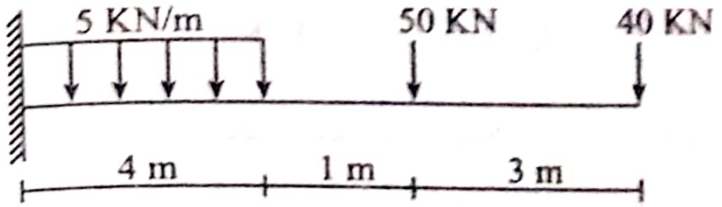


**[2018 Spring, PoU]**

**Solution:**

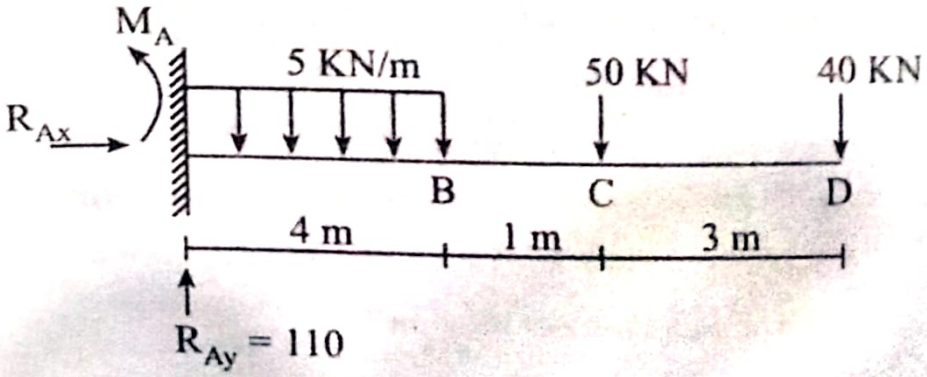


$(\overset{+}{\rightarrow})\ \Sigma F_x = 0$

or, $R_{Ax} = 0$

$(+\uparrow)\ \Sigma F_y = 0$

or, $R_{Ay} - 5 \times 4 - 50 - 40 = 0$

or, $R_{Ay} = 110$ KN

$(+\circlearrowleft)\ \Sigma M_A = 0$

or, $M_A - 5 \times 4 \times 4/2 - 50 \times 5 - 40 \times 8 = 0$



Scanned with CamScanner

or, $M_A = 610$ KNm

**Calculation of shear force** ↑+ve↓

$(V_A)_L = 0$

$(V_A)_R = 110$ KN

$V_B = 110 - 5 \times 4 = 110 - 20 = 90$ KN

$(V_C)_L = 90$ KN

$(V_C)_R = 90 - 50 = 40$ KN

$(V_D)_L = 40$ KN

$(V_D)_R = 40 - 40 = 0$

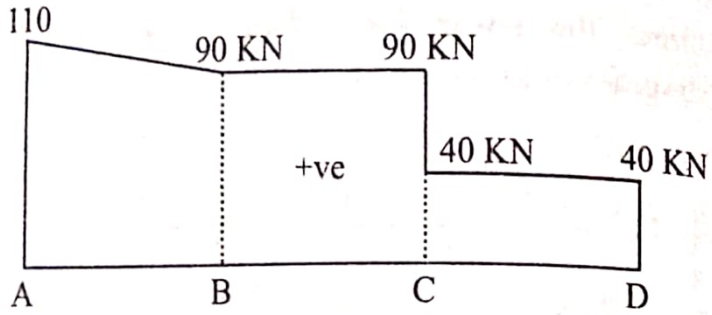


SFD (↑ +ve ↓)

**Calculation of bending moment** ↻+ve↺

$(M_A)_L = 0$

$(M_A)_R = -610$ KNm

$M_B = -610 + 110 \times 4 - 5 \times 4 \times 2 = -210$ KNm

$M_C = -610 + 110 \times 5 - 5 \times 4 \times (2 + 1) = -210$ KNm

$M_D = -610 + 110 \times 8 - 5 \times 4 \times (2 + 4) - 50 \times 3 = 0$

(At free end, moment must be 0)

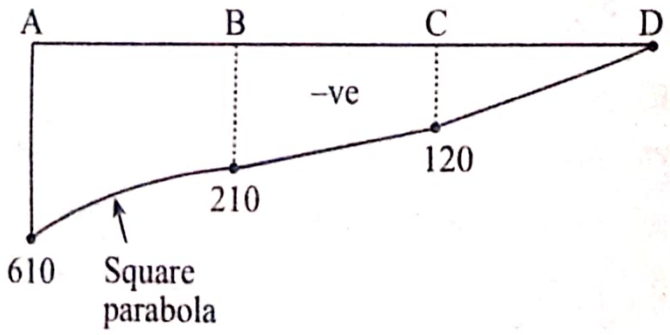


BMD (↻+ve↺)



Scanned with CamScanner

[Note: In case of UDL, square parabola curve exist in BMD. The curve has to be checked whether it is upward or downward]

10. **Draw shear force and bending moment diagram of the given beam shown. Also, find the point of zero shear and point of contra flexure if exist.**

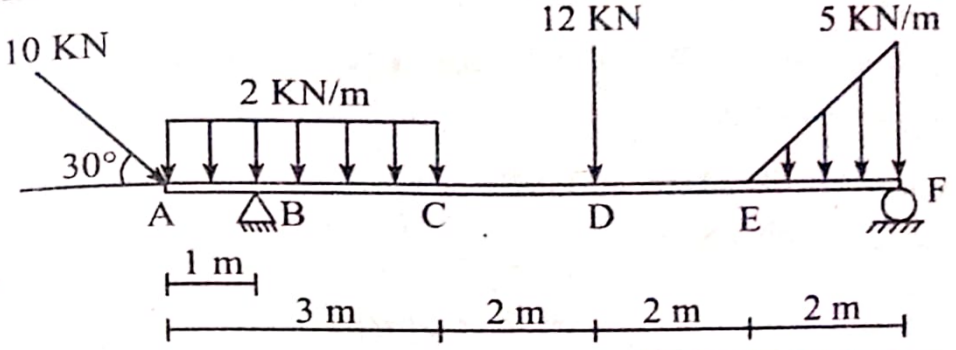


**[2017, 2019 Spring, POU]**

**Solution:**

Calculation of support reactions:

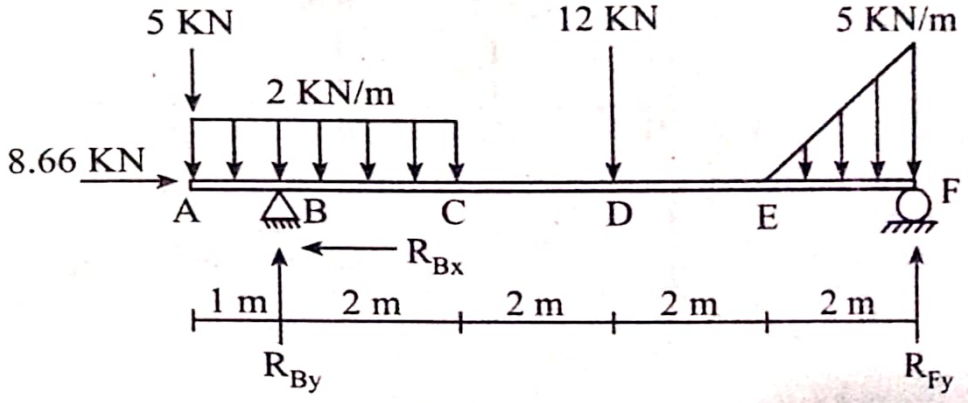


$(\overrightarrow{+})\ \Sigma F_x = 0$

or, $8.66 - R_{Bx} = 0 \Rightarrow R_{Bx} = 8.66$ KN

$(\circlearrowleft +)\Sigma M_F = 0$

or, $R_{By} \times 8 - 5 \times 9 - 2 \times 3 \times (1.5+6) - 12 \times 4 - \frac{1}{2} \times 2 \times 5 \times \frac{1}{3} \times 2 = 0$

or, $R_{By} = 17.67$ KN

$(+\uparrow)\Sigma F_y = 0$

or, $-5 + R_{By} - (2 \times 3) - 12 - \left[\frac{1}{2} \times 2 \times 5\right] + R_{Fy} = 0$

or, $-5 + 17.67 - 6 - 12 - 2.5 + R_{Fy} = 0$



Scanned with CamScanner

or, $R_{Fy} - 7.82 = 0 \Rightarrow R_{Fy} = 7.82$ KN

Calculation of share force ↑+ve ↓

$(V_A)_L = 0$

$(V_A)_R = -5$ KN

$(V_B)_L = -5 - (2 \times 1) = -7$ KN

$(V_B)_R = -7 + 17.67 = 10.67$ KN

$(V)_C = -5 - (2 \times 3) + 17.67 = 6.67$ KN

$(V_D)_L = 6.67$ KN

$(V_D)_R = 6.67 - 12 = -5.33$ KN

$(V_E) = -5.33$ KN

$(V_F)_L = -5.33 - \frac{1}{2} \times (2 \times 5) = -7.82$ KN

$(V_F)_R = 7.82 + 7.82 = 0$

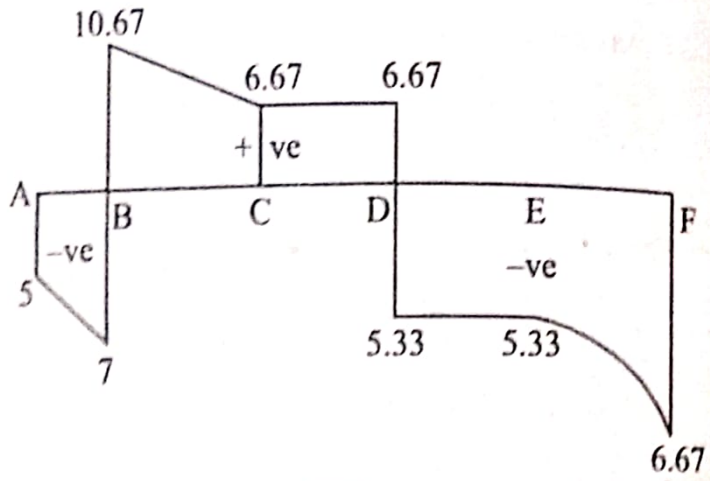


SFD

Calculation of bending moment [(↺ +ve ↻)]

$M_A = 0$

$M_B = -5 \times 1 - (2 \times 1 \times 0.5) = -6$ KNm

$M_C = -5 \times 3 + (17.67 \times 2) - (2 \times 3 \times 1.5) = 11.34$ KNm

$M_D = -5 \times 5 + (17.67 \times 4) - [2 \times 3 \times (1.5 + 2)] = 24.68$ KNm

$M_E = (-5 \times 7) + (17.67 \times 6) - [2 \times 3 \times (1.5 + 4)] - 12 \times 2 = 14.02$ KNm

$M_F = (-5 \times 9) + (17.67 \times 8) - [2 \times 3 \times (1.5 + 6)] - (12 \times 4) - \frac{1}{2} \times$

$2 \times 5 \times \frac{1}{3} \times 2 = 0$



Scanned with CamScanner

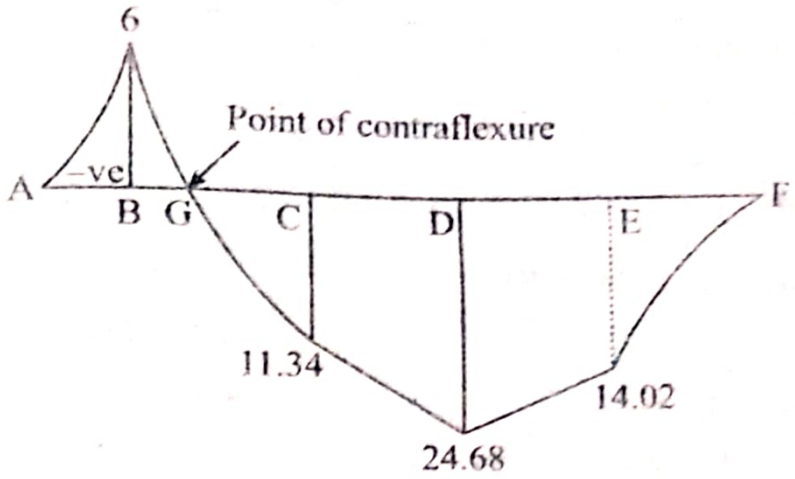


BMD

Let, G be the point of contra flexure at a distance 'x' from B

So, $(\circlearrowleft +)\ \Sigma M_G = 0$

or, $-5(1 + x) - 2 \times (1 + x) \times \frac{(1 + x)}{2} + 17.67x = 0$

or, $-5 - 5x - (1 + x)^2 + 17.67 = 0$

or, $12.67x - (1 + x)^2 - 5 = 0$

or, $x = 0.59$ m

11. **Draw shear force and bending moment diagram of the beam as shown in figure:**

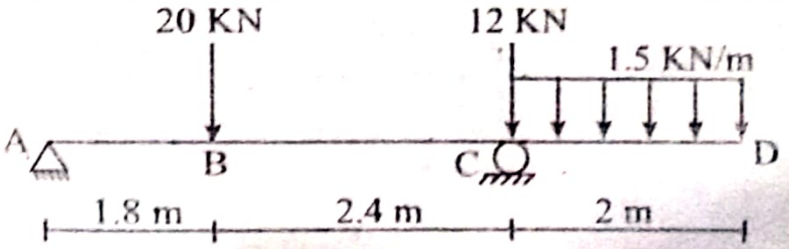


**[2020 Spring, PoU]**

Solution:

Calculation of support reaction:

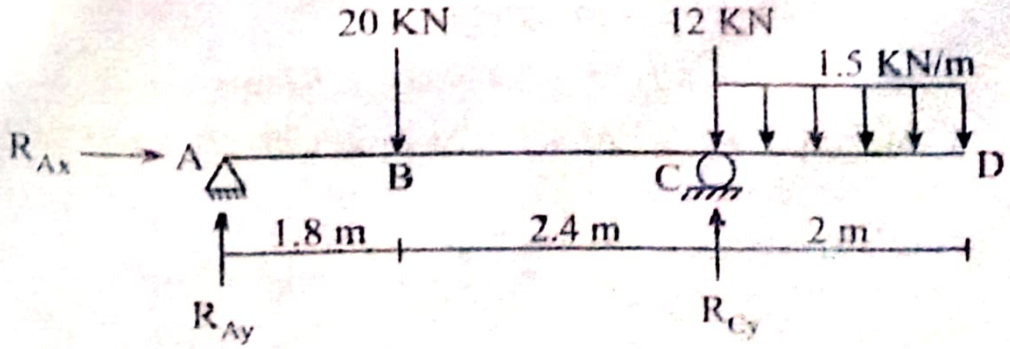




Scanned with CamScanner

$(\overrightarrow{+})\Sigma F_x = 0 \Rightarrow R_{Ax} = 0$

Figure $\Sigma M_A = 0$

or, $R_{Cy} \times (4.2) - 20 \times 1.8 - 12\,(4.2) - \left[1.5 \times 2 \times \left(\frac{2}{2} + 42\right)\right] = 0$

or, $R_{Cy} = 24.29$ KN

$(+\uparrow)\ \Sigma F_y = 0$

or, $R_{Ay} + R_{Cy} - 20 - 12 - (1.5 \times 2) = 0$

$\Rightarrow \quad R_{Ay} = 35 - 24.29 = 10.71$ KN

Calculation of shear force ($\uparrow$ +ve $\downarrow$)

$(V_A)_L = 0$

$(V_A)_R = 10.71$ KN

$(V_B)_L = 10.71$ KN

$(V_B)_R = 10.71 - 20 = -9.29$ KN

$(V_C)_L = -9.29$ KN

$(V_C)_R = -9.29 + 24.29 - 12 = 3$ KN

$(V_D) = 3 - [1.9 \times 2] = 0$

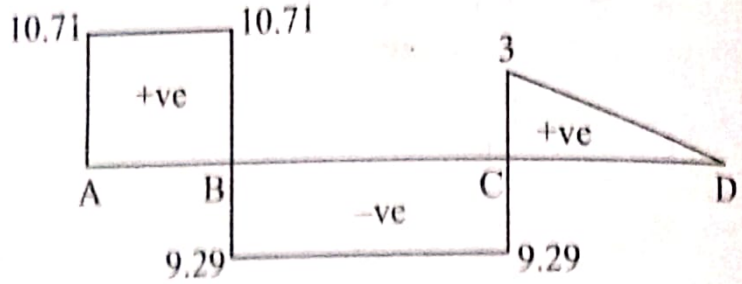


SFD ($\uparrow$ +ve $\downarrow$)

Calculation of bending moment [($\circlearrowleft$ +ve $\circlearrowright$)]

$M_A = 0$

$M_B = 10.71 \times 1.8 = 19.287$ KNm

$M_C = 10.71 \times 4.2 - 20 \times 2.4 = -3.018$ KNm

$M_D = 10.71 \times 6.2 - 20 \times 4.4 - 12 \times 2 + (24.29 \times 2) - (1.5 \times 2 \times 1) = 0$



Scanned with CamScanner

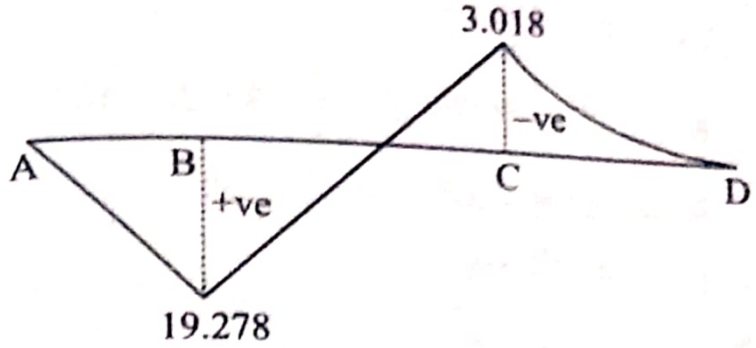


BMD (Bending moment Diagram)

**12. Draw shear force and bending moment diagrams of given beam. Also indicate important points such as point of zero shear and point of contra flexure if any, can be found.**

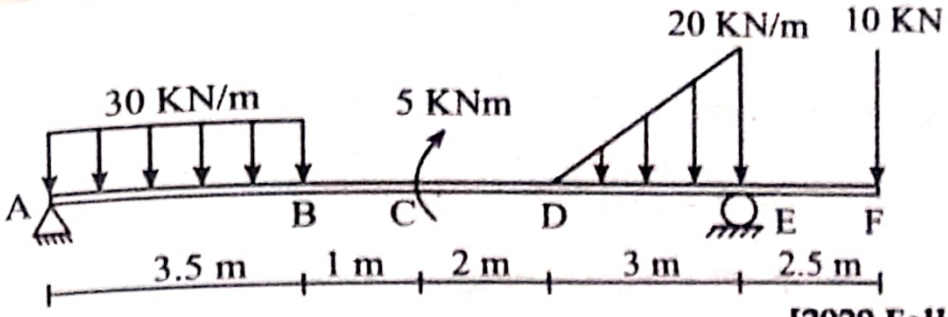


**[2020 Fall, PoU]**

**Solution:**

Calculation of support reactions:

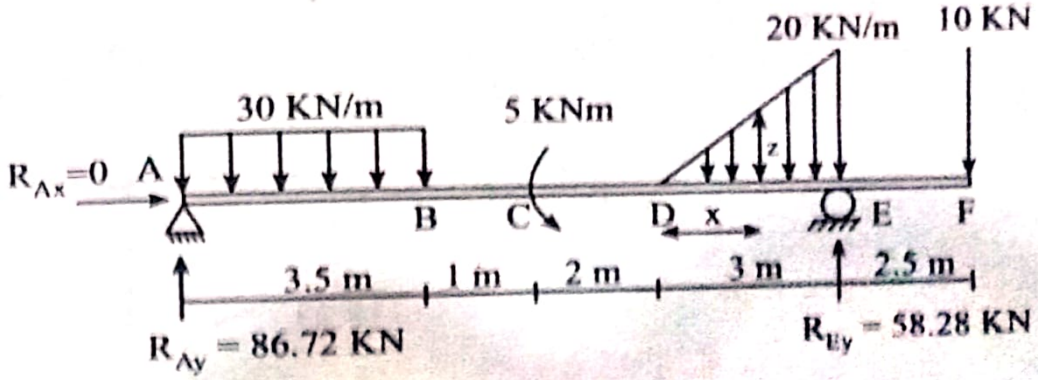


$(+\circlearrowleft)\Sigma M_A = 0$

or, $-10 \times 12 + R_{Ey} \times 95 - \frac{1}{2} \times 3 \times 20 \times \left(\frac{2}{3} \times 3 + 6.5\right) + 5 - \left(30 \times 3.5 \times \frac{2.5}{2}\right) = 0$

or, $-120 + 9.5\, R_{Ey} - 255 + 5 - 183.75 = 0$

or, $9.5\, R_{Ey} = 553.75 \Rightarrow R_{Ey} = 58.28$ KN



Scanned with CamScanner

$(+\uparrow)\ \Sigma F_y = 0$

or, $R_{Ay} + R_{Ey} - (30 \times 3.5) - \frac{1}{2} \times 3 \times 20 - 10 = 0$

or, $R_{Ay} + 58.28 - 105 - 10 - 30 = 0$

or, $R_{Ay} = 86.72$ KN

$(\overrightarrow{+})\ \Sigma F_x = 0 \Rightarrow R_{Ax} = 0$

Calculation of shear force $\uparrow$ +ve $\downarrow$

$(V_A)_L = 0$

$(V_A)_R = 86.72$ KN

$V_B = 86.72 - (30 \times 3.5) = -18.28$ KN

$V_C = -18.28$ KN

$V_D = -18.28$ KN

$(V_E)_L = -18.28 - \frac{1}{2} \times 3 \times 20 = -48.28$ KN

$(V_E)_R = -48.28 + 58.28 = 10$ KN

$(V_F)_L = 10$ KN

$(V_F)_R = 10 - 10 = 0$

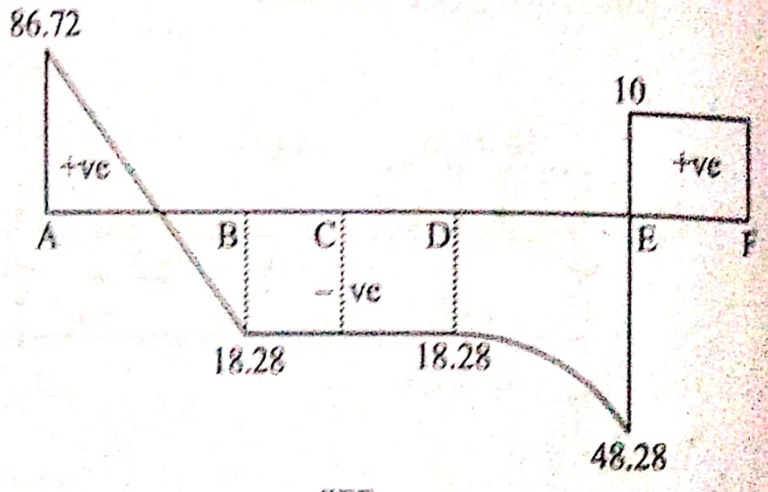


SFD

Calculation of Bending Moment

$M_A = 0$

$M_B = 86.72 \times 3.5 - (30 \times 35 \times 1.75) = 119.77$ KNm

$(M_C)_L = 86.72 \times 4.5 - (30 \times 3.5 \times (1.75 + 1) = 101.49$ KNm

$(M_C)_R = 101.49 - 5 = 96.49$ KNm



Scanned with CamScanner

$M_D = 86.72 \times 6.5 - [30 \times 3.5 \times (1.75 + 3)] - 54 = 59.93$ KNm

$M_E = 86.72 \times 9.5 - [30 \times 3.5 \times (1.75 + 6)] - 5 - \frac{1}{2} \times 3 \times 20 \times \frac{1}{3} \times 3 = -4.625$

$M_F = 86.75 \times 12 - [30 \times 3.5 \times (1.75 + 8.5)] - 5 - \frac{1}{2} \times 3 \times 20 \times \left(\frac{1}{3} \times 3 + 2.5\right) + 58.28 \times 2.5 = 0$

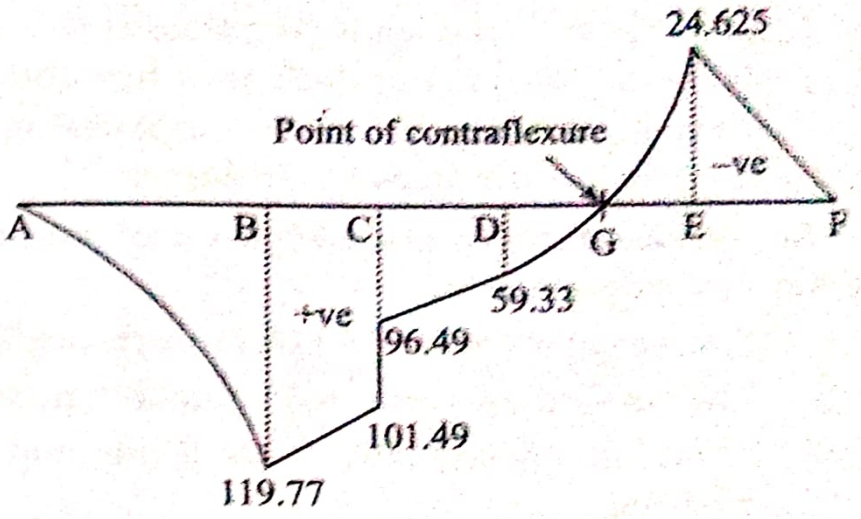


BMD

Let, point G be the contra flexure point at a distance 'x' from D,

Here,

$3 \rightarrow 20$

$x \rightarrow z$

$\Rightarrow \quad z = \frac{20}{3} x = 6.67x$

$(\circlearrowright +) M_G = 0$

or, $86.72\,(6.5 + x) - 30 \times 3.5 \times [1.75 + (3 + x)] - 5 - \frac{1}{2} \times x \times (6.67x) \times \frac{1}{3} \times x = 0$

or, $563.68 + 86.72x - 105\,(4.75 + x) - 5 - 1.11x^3 = 0$

or, $563.68 - 498.75 - 5 + 86.72x - 105x - 1.11x^3 = 0$

or, $59.93 - 18.28x - 1.11x^3 = 0$

$\therefore \quad x = 2.41$ m



Scanned with CamScanner

CHAPTER - 7

# ANALYSIS OF PLANE TRUSSES

## 7.1 Introduction

A *truss* is a structure composed of slender members that are fastened together at their end joints. The truss is one of the major types of engineering structures which provides both a practical and an economic solution to many engineering situations, especially in the design of bridges and buildings.

The ideal assumptions made while calculating the forces in the members of truss are as follows:

i. Self-weight of the member of a truss is negligible.

ii. The members are connected by smooth frictionless pins.

iii. Loads are applied only at the joints and not on the member.

iv. Truss is statically determinate.

**Classification of truss:**

i. **According to the analysis**

- Plane truss or 2-D truss
- Space truss or 3-D truss

ii. **According to their construction**

- Simple truss
- Compound truss
- Complex truss

iii. **According to support condition**

- Simply supported truss
- Cantilever truss

iv. **According to purpose of utilization**

- Roof truss
- Bridge truss
- Tower truss, etc.



Scanned with CamScanner

## 7.2 Determinacy and Stability of Truss

If m be the number of members, r be the number of support reactions, and j be the number of joints in the truss, then

Total no. of unknowns = m + r

Total no. of equations = 2j

Degree of static determinacy

= total no. of unknowns – total no. of equations available

= m + r – 2j

If m + r = 2j, truss is *statically determinate and stable*

If m + r > 2j, truss is *statically indeterminate*

If m + r < 2j, truss is *unstable*

**Example:**

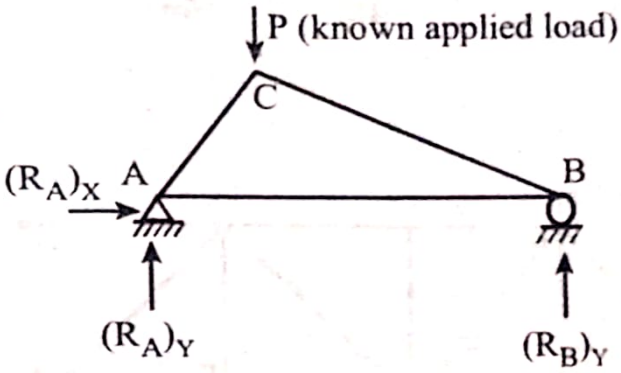


Members (AC, CB, AB)

Reactions $\begin{Bmatrix} 2 \text{ at A} \\ 1 \text{ at B} \end{Bmatrix}$

Total no. of members (m) = 3

Total no. of unknowns = m + r = 3 + 3 = 6

Total no. of equations= 2j = 2 × 3

Degree of static indeterminacy (DSI) = 6 - 6 = 0

Thus, the truss is stable and determinate.

**Analysis of truss:**

There are two methods to analyze a truss. These are:

- Method of joints
- Method of sections



Scanned with CamScanner

**1. Determine the total degree of internal, external indeterminacy of given truss. Also determine the forces in members BC, BG, HG and GD.**

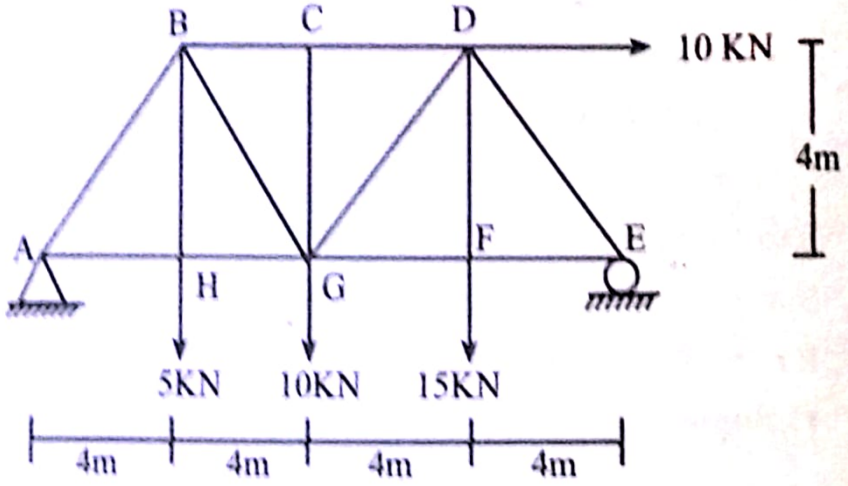


**Solution:**

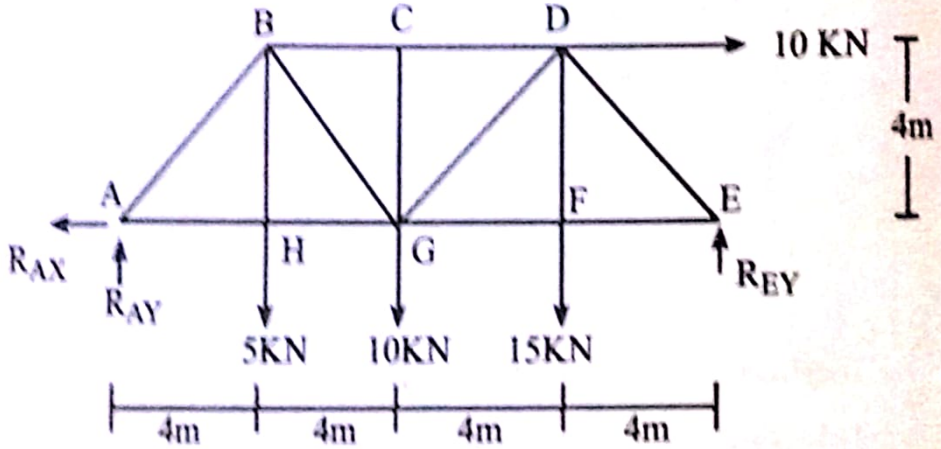


Total no. of members (m) = 13

No. of reactions (r) = 3

No. of joints (j) = 8

Now,

$m + r = 13 + 3 = 16$, $2j = 2 \times 8 = 16$

For truss, total degree of static indeterminacy= $(m+r) - 2j$

$= 16 - 16 = 0$

∴ Total degree of static indeterminacy= 0



Scanned with CamScanner

Since no. of equations available are 3 and no. of unknown reactions (r) is 3, degree of external indeterminacy $= r-3 = 3-3 = 0$.

Now, degree of internal indeterminacy = total degree of static indeterminacy-degree of external indeterminacy $= 0-0 = 0$.

**Calculation of unknown reactions**

For static equilibrium,

$(\overset{+}{\rightarrow})\ \Sigma F_x = 0$

$-(R_A)_x + 10 = 0$

$\therefore \quad (R_A)_x = 10\ KN\ (\leftarrow)$

$(\uparrow +)\ \Sigma F_y = 0$

$(R_A)_y - 5 - 10 - 15 + (R_E)_y = 0$

$\therefore (R_A)_y + (R_E)_y = 30$ ..... (i)

$(\circlearrowleft)\ \Sigma M_A = 0$

or, $5\times4 + 10\times8 + 15\times12 + 10\times4 - (R_E)_y\times16 + (R_A)_x\times0 + (R_A)_y\times0 = 0$

$\therefore (R_E)_y = 20\ KN\ (\uparrow)$

From equation (i),

$(R_A)_y = 30 - 20 = 10\ KN\ (\uparrow)$

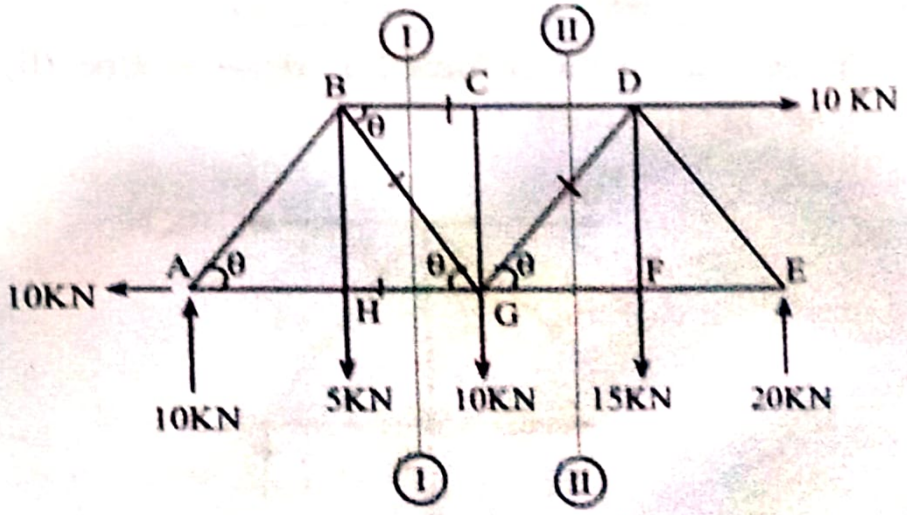


To calculate member forces $F_{BC}$, $F_{BG}$, $F_{HG}$, draw section (I) – (I) and take left portion



Scanned with CamScanner

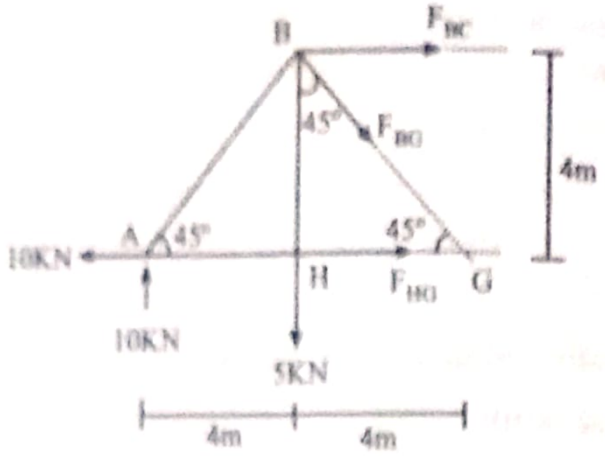


$(\circlearrowleft)\ \Sigma M_B = 0$

$F_{BC} \times 0 + F_{BG} \times 0 - F_{HG} \times 4 + 5 \times 0 + 10 \times 4 + 10 \times 4 = 0$

$\therefore \quad F_{HG} = \frac{80}{4} = 20$ KN (T)

Again, $(\circlearrowleft)\ \Sigma M_G = 0$

or, $F_{BC} \times 4 + F_{BG} \times 0 + F_{HG} \times 0 - 5 \times 4 + 10 \times 8 + 10 \times 0 = 0$

or, $4F_{BC} - 20 + 80 = 0$

or, $F_{BC} = -\frac{60}{4} = -15$ KN $= 15$ KN (C)

$(\uparrow +)\ \Sigma F_y = 0$

or, $10 - 5 - F_{BG} \cos 45° = 0$

or, $F_{BG} = \frac{5}{\cos 45°} = 7.07$ KN (T)

To calculate member force $F_{GD}$, draw section (II) – (II) and take right side portion.

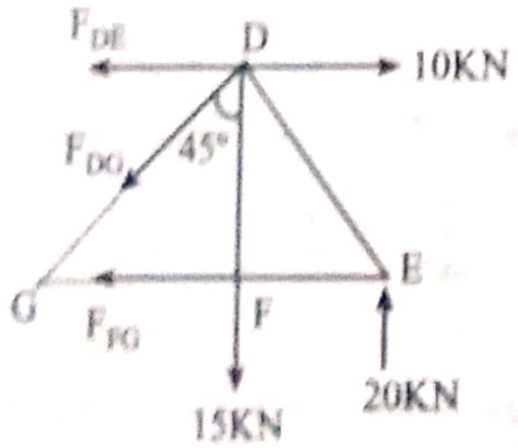




Scanned with CamScanner

For equilibrium condition,

$(\uparrow +)\ \Sigma F_y = 0$

or, $-15 + 20 - F_{DC} \cos 45^\circ = 0$

or, $F_{DC} = \dfrac{5}{\cos 45^\circ} = 7.07$ KN (T)

| Member | Force | Magnitude |
|---|---|---|
| B C | $F_{BC}$ | 15 KN (C) |
| B G | $F_{BG}$ | 7.07 KN (T) |
| H G | $F_{HG}$ | 20 KN (T) |
| G D | $F_{GD}$ | 7.07 KN (T) |

**2. Compute the forces developed in the members (BC, BD, BE, DE, DG and EG of the given truss loaded as shown in figure:**

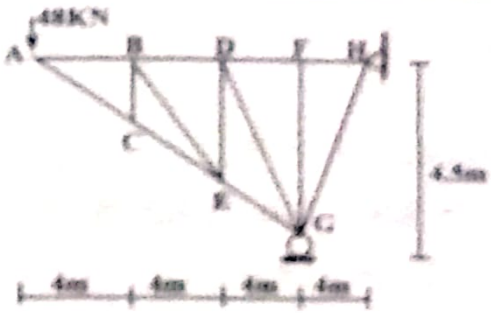


**Solution:**

Considering left part of section (i - i)

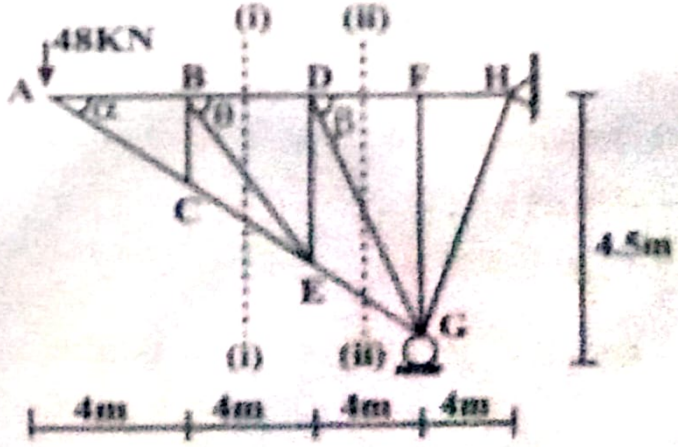


Taking moment about E.

$\circlearrowleft\ \Sigma M_E = 0$

or, $R_{BD} \times 3 - 48 \times 8 = 0$



Scanned with CamScanner

$\therefore R_{BD} = 128$ KN (T)

From similar triangles ADE and AFG

$$\frac{DE}{AD} = \frac{FG}{AF}$$

$$\Rightarrow DE = \frac{4.5}{12} AD = \frac{4.5}{12} \times 8 = 3$$

In $\Delta BDE$, $\theta = \tan^{-1}\left(\frac{DE}{BD}\right) = \tan^{-1}\left(\frac{3}{4}\right) = 36.87°$

In $\Delta AFG$, $\alpha = \tan^{-1}\left(\frac{FG}{AF}\right) = \tan^{-1}\frac{4.5}{12} = 20.56°$

$\circlearrowleft \Sigma M_A = 0$

or, $R_{BE} \sin 36.87° \times 4 = 0$

or, $R_{BE} = 0$

$\left(\overset{+}{\rightarrow}\right) \Sigma F_x = 0$

or, $R_{BD} + R_{CE} \cos 20.56° = 0$

or, $R_{CE} = -136.71$ KN $= 136.71$ KN (C)

Taking left-part of section (ii),

$\circlearrowleft \Sigma M_A = 0$

or, $R_{DG} \sin 48.7° \times 8 = 0$

or, $R_{DG} = 0$

$(+\uparrow)\ \Sigma F_y = 0$

or, $R_{EG} \sin 20.56° - 48 = 0$

or, $R_{EG} = -136.68$ KN

$= +136.68$ KN (C)

In $\Delta DFG$, $\beta = \tan^{-1}\left(\frac{FG}{DF}\right) = \tan^{-1}\left(\frac{4.5}{4}\right) = 48.37°$

**Joint D**

$(+\uparrow)\ \Sigma F_y = 0$

or, $R_{DG} \sin\beta + R_{DE} = 0$

or, $R_{DE} = 0$ (Since $R_{DG} = 0$)



Scanned with CamScanner

**Joint B**

$R_{BE} \sin\theta + R_{BC} = 0$

$\therefore R_{BC} = 0$

Thus, we can tabulate the final result as

| Member | BC | BD | BE | DE | DG | EG |
|---|---|---|---|---|---|---|
| Magnitude of force | 0 | 128 | 0 | 0 | 0 | 136.68 |
| Nature | - | (T) | - | - | - | (C) |

**3. Determine the member forces BC, DG and FG for the given truss.**

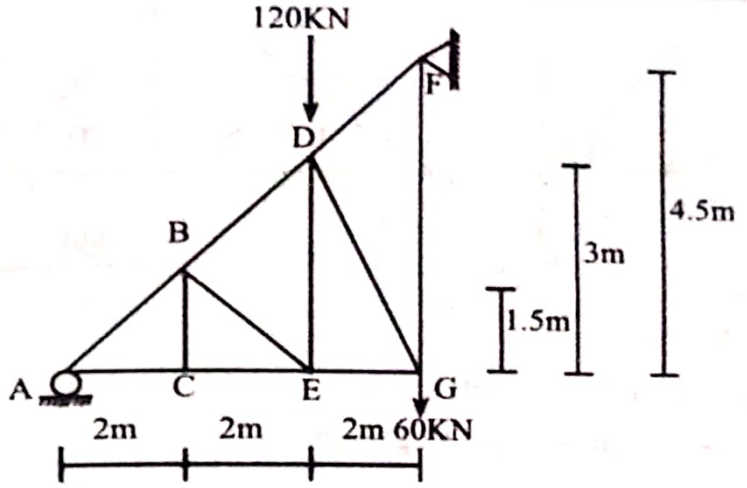


**Solution:**

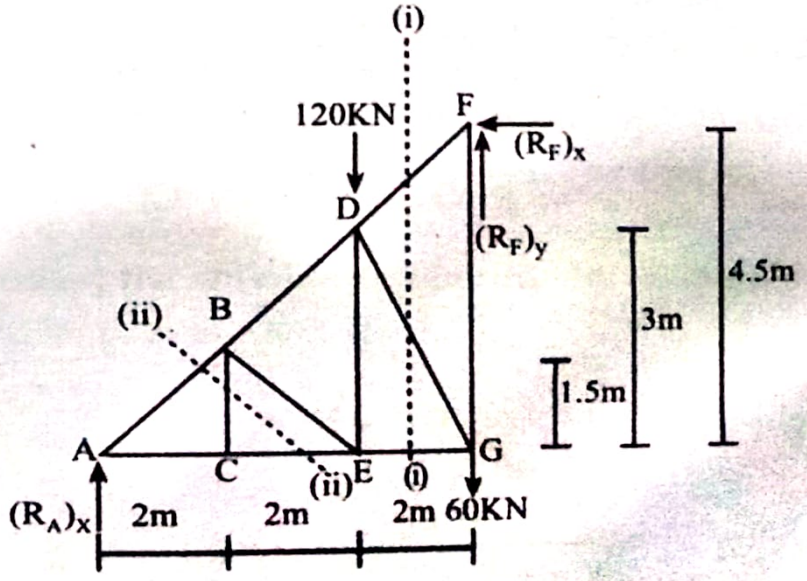


$\circlearrowleft^{+}$ $\Sigma M_F = 0$

or, $(R_A)_y \times 6 - 120 \times 2 = 0$



Scanned with CamScanner

$\therefore (R_A)_y = 40$ KN (↑)

$(+\uparrow)\ \Sigma F_y = 0$

or, $(R_A)_y - 60 - 120 + (R_F)_y = 0$

or, $(R_F)_y = 180 - 40 = 140$ KN (↑)

Taking section (i) - (i) and considering right part, we get

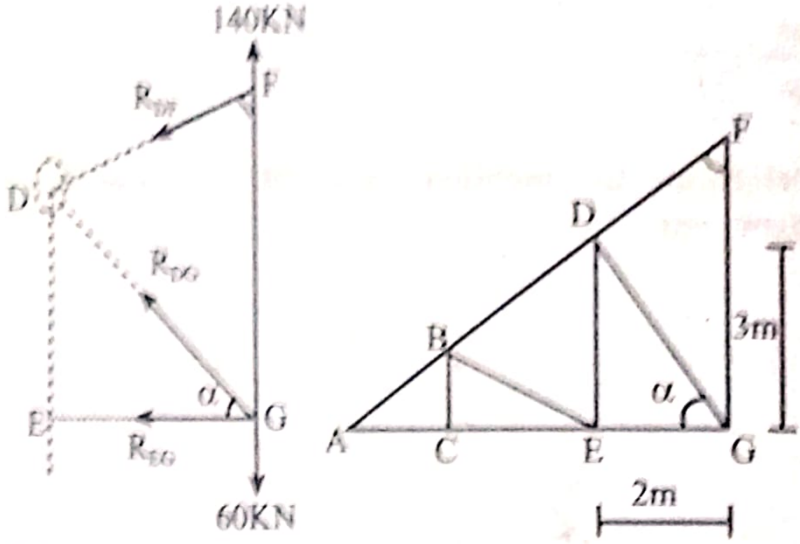


(b) $\Sigma M_D = 0$

or, $R_{EG} \times 3 + 60 \times 2 - 140 \times 2 = 0$

or, $R_{EG} = 53.33$KN $= 53.33$KN (T)

$\alpha = \tan^{-1}\left(\frac{DE}{EG}\right) = 56.31°$

$(+\uparrow)\ \Sigma F_y = 0$

or, $140 - 60 + R_{DG} \sin\alpha = 0$

or, $R_{DG} = \frac{-80}{\sin\beta} = -96.15$ KN $= 96.15$ KN (C)

Taking section (ii) - (ii) and considering left part, we have

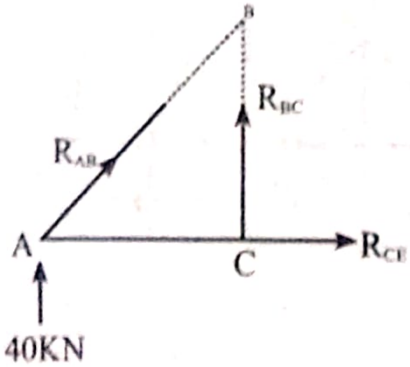




Scanned with CamScanner

(b) $\Sigma M_A = 0$

or, $-R_{BC} \times 2 = 0$

$\therefore R_{BC} = 0$

| Member | BC | DG | EG |
|---|---|---|---|
| Magnitude of force | 0 | 96.15KN | 53.33KN |
| Nature | - | C | T |

4. **Describe the uses of trusses in engineering. Determine the force developed in BC, BE, EF, AB, AF and BF members of cantilever truss loaded as shown in the figure.**

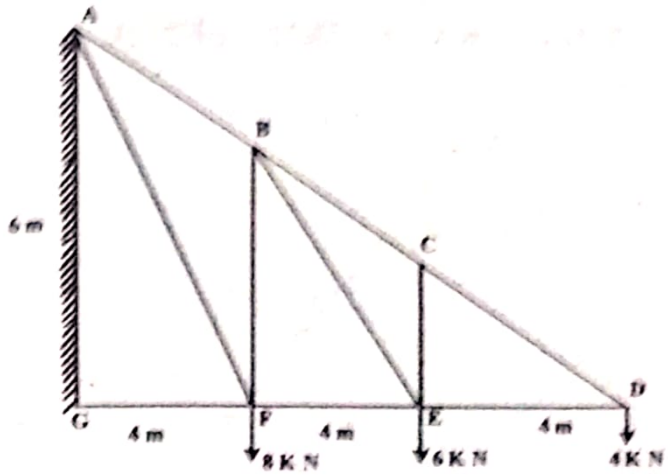


**Solution:**

Trusses find their use in various civil engineering structures such as bridge, sports stadium, transmission towers, railway platforms, roofs, water reservoirs etc.

It is light, cheaper and is economical as compared to the R.C.C. structures (frame structures) for heavy loads.

Trusses are also used in construction of fuselage of aeroplane.

**Using Joint Method**

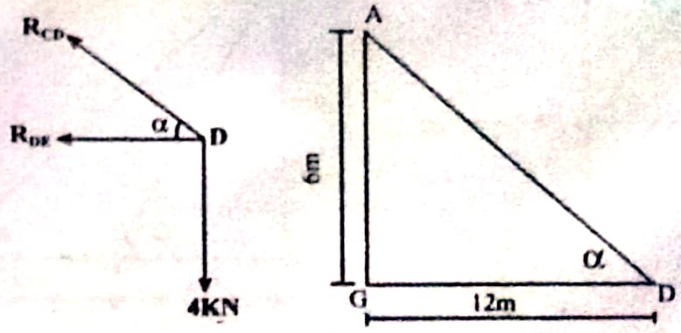




Scanned with CamScanner

$\alpha = \tan^{-1}\frac{1}{2} = 26.57°$

**Stating from free joint D,**

**Joint D**

$(+\uparrow)\ \Sigma F_y = 0$

or, $R_{CD} \sin 26.57° - 4 = 0$

$\therefore R_{CD} = 8.94$ KN (T)

$\left(\overset{+}{\rightarrow}\right)\ \Sigma F_x = 0$

or, $-R_{DE} - R_{CD} \cos\alpha = 0$

or, $-R_{DE} - R_{CD} \cos 26.57° = 0$

or, $R_{DE} = -8.94 \cos 26.57° = -8$KN = 8KN (C)

**Joint C**

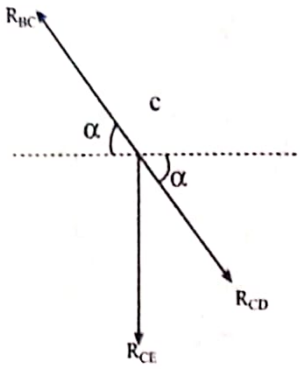


$\left(\overset{+}{\rightarrow}\right)\ \Sigma F_x = 0$

or, $-R_{BC} \cos\alpha + R_{CD} \cos\alpha = 0$

$\therefore R_{BC} = R_{CD} = 8.94$ KN (T)

$(+\uparrow)\ \Sigma F_y = 0$

or, $-R_{CE} + R_{BC} \sin\alpha - R_{CD} \sin\alpha = 0$

or, $R_{CE} = 0$ ($\because R_{BC} = R_{CD}$)

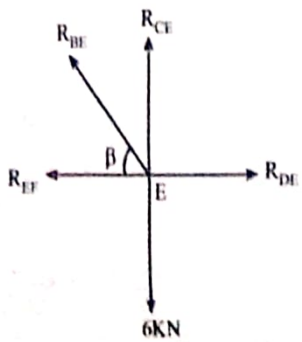


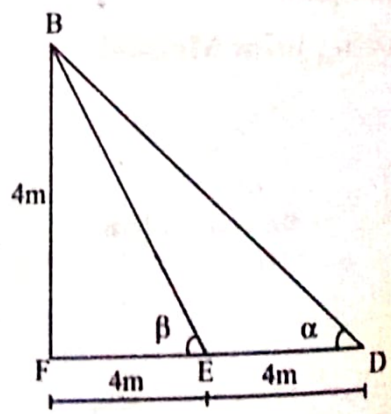




Scanned with CamScanner

**Joint E**

$(+\uparrow)\ \Sigma F_y = 0$

or, $R_{BE} \sin 45° - 6 = 0$

$\therefore R_{BE} = 8.485$ KN (T)

$(\overset{+}{\rightarrow})\ \Sigma F_x = 0$

or, $-R_{EF} - R_{BE} \cos 45° + R_{DE} = 0$

or, $-R_{EF} - 6 - 3 = 0$

$\therefore R_{EF} = -14KN = 14KN$ (C)

**Joint B**

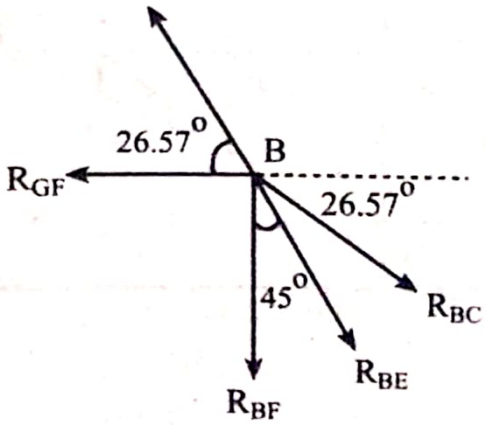


$(\overset{+}{\rightarrow})\ \Sigma F_x = 0$

or, $R_{BC} \cos 26.57° + R_{BE} \cos 45° - R_{AB} \cos 26.57° = 0$

or, $8+6 - R_{AB} \cos 26.17° = 0$

$\therefore R_{AB} = 15.65$ KN (T)

$(+\uparrow)\ \Sigma F_y = 0$

or, $R_{AB} \sin 26.57° - R_{BE} \sin 45° - R_{BC} \sin 26.57° - R_{BF} = 0$

$\therefore R_{BF} = -3$ KN $= 3$ KN (C)

**Joint F**

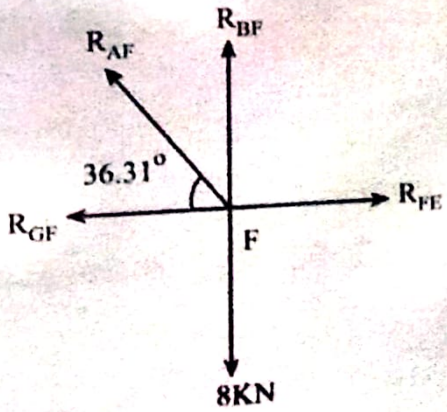




Scanned with CamScanner

$(+\uparrow)\ \Sigma F_y = 0$

or, $R_{BF} + R_{AF} \sin 56.31° - 8 = 0$

$\therefore R_{AF} = 13.22$ KN (T)

| Member | BC | BE | EF | AB | AF | BF |
|---|---|---|---|---|---|---|
| Magnitude of force | 8.94 | 8.485 | 14 | 15.65 | 13.22 | 3 |
| Nature | (T) | T | C | T | T | C |

5. **Find the member forces of indicated members of the truss shown in figure below.**

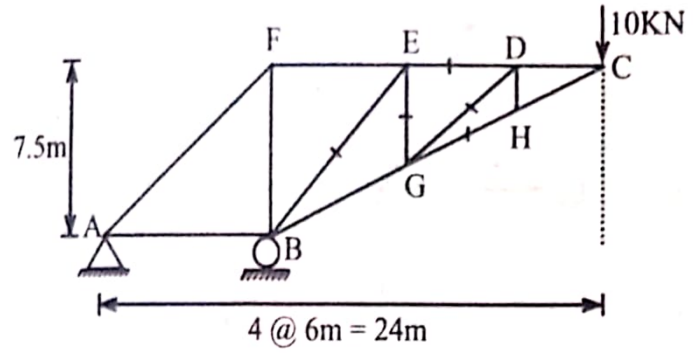


**Solution:**

**Joint C**

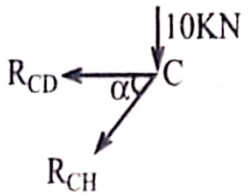


$$\alpha = \tan^{-1}\left(\frac{7.5}{18}\right) = 22.62°$$

$(+\uparrow)\ \Sigma F_y = 0$

or, $-R_{CH}\sin\alpha - 10 = 0$

$$\text{or, } R_{CH} = \frac{-10}{\sin\alpha} = \frac{-10}{\sin 22.62°} = -26\text{KN} = 26\text{KN(C)}$$

$(\overset{+}{\rightarrow})\ \Sigma F_x = 0$

or, $-R_{CD} - R_{CH}\cos\alpha = 0$

or, $R_{CD} = -R_{CH}\cos 22.62° = -(-26)\cos 22.62° = 24$ KN(T)



Scanned with CamScanner

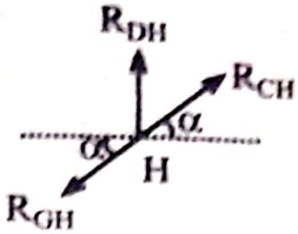


**Joint H**

$(\overset{+}{\rightarrow})\ \Sigma F_x = 0$

or, $-R_{GH}\cos\alpha + R_{CH}\cos\alpha = 0$

or, $R_{GH} = R_{CH} = -26KN = 26KN(C)$

$(+\uparrow)\ \Sigma F_y = 0$

or, $R_{DH} - R_{GH}\sin\alpha + R_{GH}\sin\alpha = 0$

or, $R_{DH} = 0$

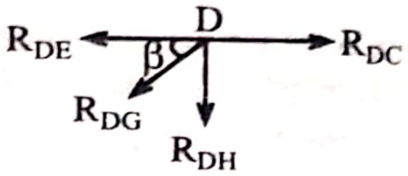


**Joint D**

$(+\uparrow)\ \Sigma F_y = 0$

or, $-(R_{DG}\sin\beta + R_{DH}) = 0$

or, $R_{DG} = 0$

$(\overset{+}{\rightarrow})\Sigma F_x = 0$

or, $-R_{DE} + R_{DC} = 0$

or, $R_{DE} = R_{DC} = 24KN(T)$

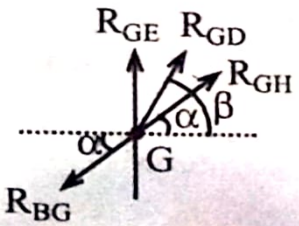


**Joint G**

$(\overset{+}{\rightarrow})\Sigma F_x = 0$

or, $R_{GH}\cos\alpha - R_{BG}\cos\alpha + R_{GD}\cos\beta = 0$

or, $R_{BG} = R_{GH}$ (since $R_{GD} = 0$)

$(+\uparrow)\ \Sigma F_y = 0$

or, $R_{GH}\sin\alpha - R_{BG}\sin\alpha + R_{GD} = 0$



Scanned with CamScanner

or, $R_{GE} = 0$ (Since $R_{BG} = R_{GH}$)

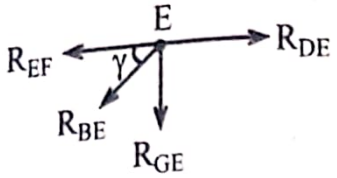


**Joint E**

$(+\uparrow)\ \Sigma F_y = 0$

or, $-R_{BE}\sin\gamma - R_{GE} = 0$

or, $R_{BE} = 0$

| Member | DH | DE | GH | GE | BE |
|---|---|---|---|---|---|
| Nature | None | T | C | None | None |
| Magnitude of force (KN) | 0 | 24 | 26 | 0 | 0 |

**6. Determine the force developed in the members AB, ED, BC and BD of the truss loaded as shown in figure below.**

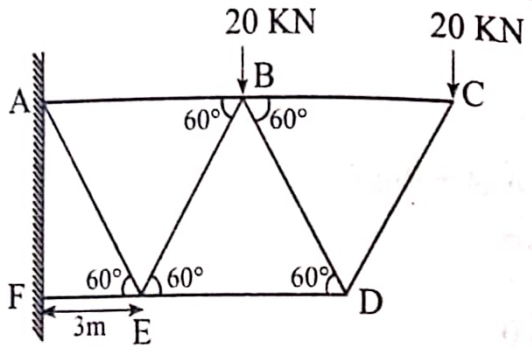


**Solution:**

**Joint Method**

**Joint C**

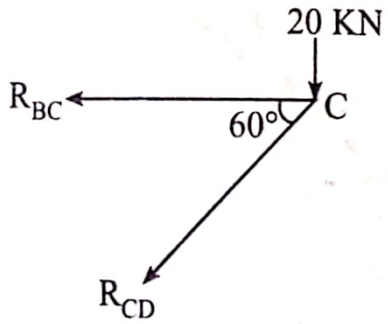


$(+\uparrow)\ \Sigma F_y = 0$

or, $-20 - R_{CD}\sin 60° = 0$

$\therefore R_{CD} = -23.1$ KN $= 23.1$ KN(C)

$(\overset{+}{\rightarrow})\ \Sigma F_x = 0$



Scanned with CamScanner

or, $-R_{BC} - R_{CD}\cos 60° = 0$

$\therefore R_{BC} = 11.55$ KN (T)

**Joint D**

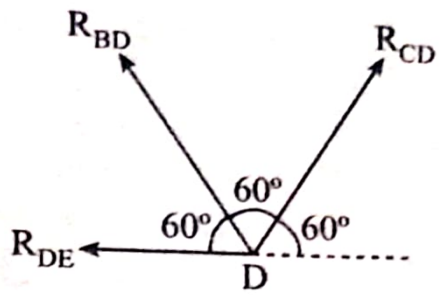


$(+\uparrow)\ \Sigma F_y = 0$

or, $R_{CD}\sin 60° + R_{BD}\sin 60° = 0$

or, $R_{BD} = -R_{CD} = 23.1$ KN (T)

$(\overset{+}{\rightarrow})\ \Sigma F_x = 0$

or, $R_{CD}\cos 60° - R_{BD}\cos 60° - R_{DE} = 0$

or, $R_{DE} = -23.1$ KN $= 23.1$ KN (C)

**Joint E**

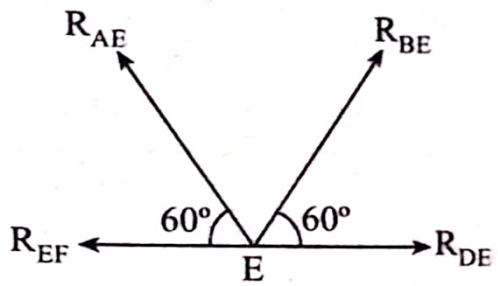


$(+\uparrow)\ \Sigma F_y = 0$

or, $-20 - 23.1\sin 60° - R_{BE}\sin 60° = 0$

or, $R_{BE} = -46.2$KN $= 46.2$ KN (C)

$(\overset{+}{\rightarrow})\ \Sigma F_x = 0$

or, $-R_{AB} + 11.55 + 23.1\cos 60° - R_{BE}\cos 60° = 0$

or, $R_{AB} = 46.2$ KN (T)

| Member | Magnitude and nature |
|---|---|
| BC | 11.55 (T) |
| BD | 23.1 (T) |
| ED | 23.1 (C) |
| AB | 46.2 (T) |



Scanned with CamScanner

7. **Determine the force in member CE, DE and DF of given truss by method of section.**

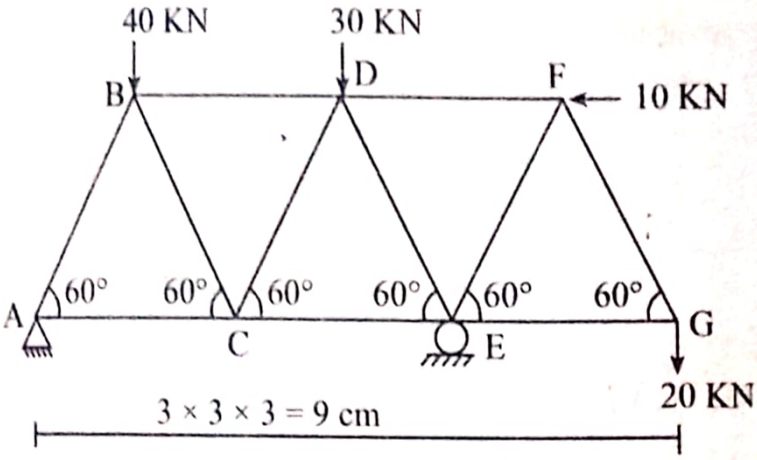


**[2018 Fall, PoU]**

**Solution:**

**Calculation of support reactions:**

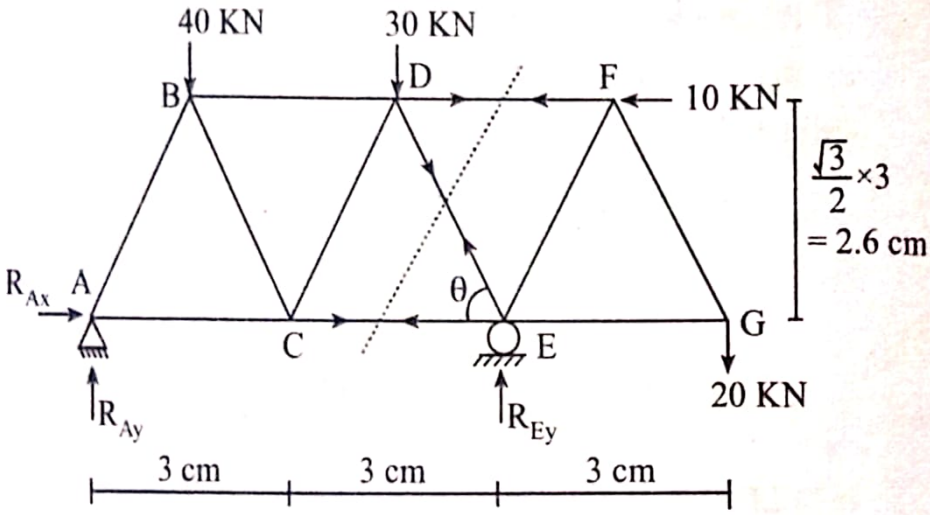


$(\overset{+}{\rightarrow})\ \Sigma F_x = 0$

or, $R_{Ax} - 10 = 0$

or, $R_{Ax} = 10$ KN

$(+\circlearrowleft)\ \Sigma M_A = 0$

or, $R_{Ey} \times 6 - 20 \times 9 - 30x\ (3 + 1.5) - 40 \times (1.5) + 10 \times 2.6 = 0$

or, $6R_{Ey} - 180 - 135.8 - 60 + 26 = 0$

$\therefore$ $R_{Ey} = 58.3$ KN

$(\uparrow +)\ \Sigma F_y = 0$

or, $R_{Ay} + R_{Ey} - 20 - 30 - 40 = 0$

or, $R_{Ay} = 31.7$ KN

Consider the section 1 – 1,



Scanned with CamScanner

Height of equilateral triangle $= \frac{\sqrt{3}}{2} \times$ (Side of triangle)

$$= \frac{\sqrt{3}}{2} \times 3$$

$$= 2.6 \text{ cm}$$

Considering the section 1 – 1,

For member DF,

$(+\circlearrowleft)$ $\Sigma M_C = 0$ [Observe right of section 1 – 1]

or, $-20 \times 3 + 10 \times 2.6 + F_{DF} \times 2.6 = 0$

or, $F_{DF} = 13.07$ KN

For member ED,

$(\uparrow+)$ $\Sigma F_y = 0$ [Observe right of section 1 – 1]

or, $F_{ED} \sin 60° + R_{Ey} - 20 = 0$

or, $F_{ED} \sin 60° + 58.3 - 20 = 0$

or, $F_{ED} = -44.22$ KN

For member EC,

$(+\circlearrowleft)$ $\Sigma M_D = 0$ [Observe right of section 1 – 1]

or, $58.3 \times 1.5 - 20 \times 4.5 - F_{EC} \times 2.6 = 0$

or, $F_{EC} = -0.98$ KN

| Member | DF | ED | EC |
|---|---|---|---|
| Nature | T | C | C |
| Magnitude | 13.07 KN | 44.22 KN | 0.98 KN |

**8. Determine the force in member AC, BC and BD of truss shown below by the method of section.**

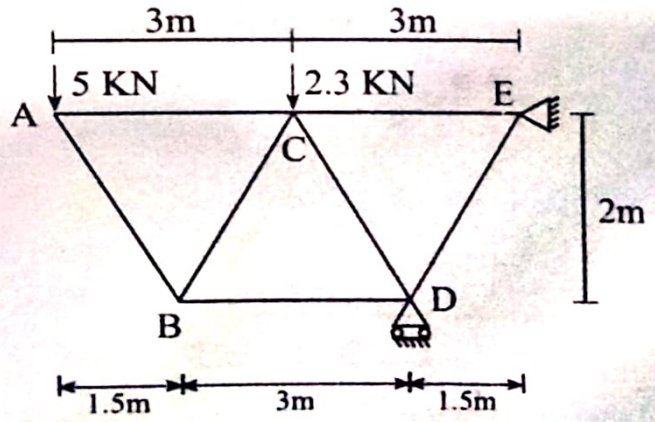


**[2017 Fall, PoU]**



Scanned with CamScanner

**Solution:**

Considering the section 1–1,

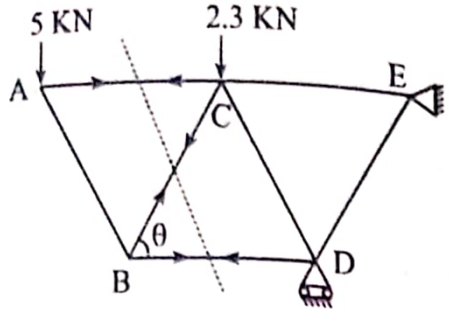


For member AC,

$\circlearrowleft\!\!\!

*Solution:*

**Calculation of support reactions**

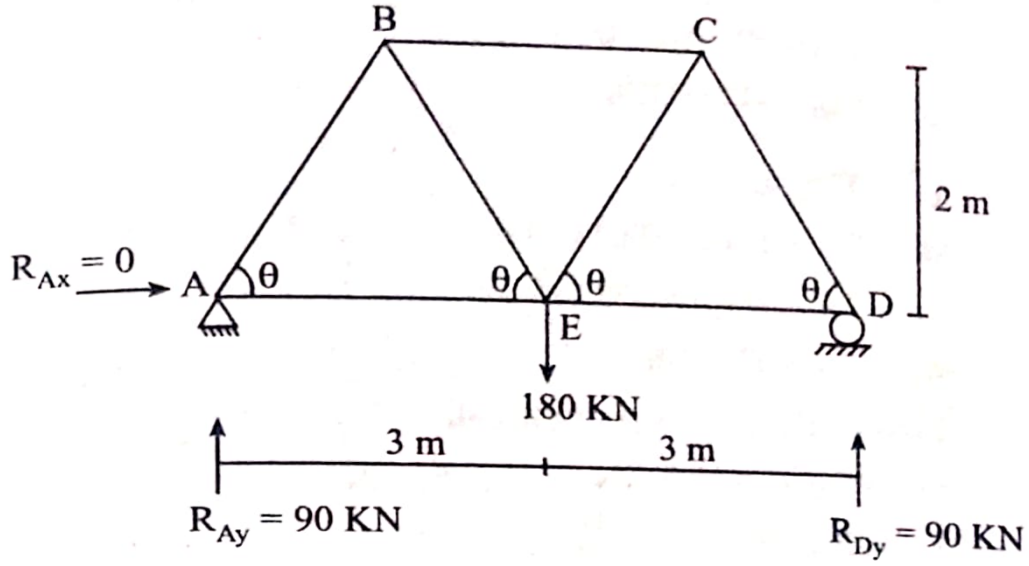


$(\overset{+}{\rightarrow})\ \Sigma F_x = 0$

or, $R_{Ax} = 0$

$(+\circlearrowleft)\ \Sigma M_A = 0$

or, $R_{Dy} \times 6 - 180 \times 3 = 0$

or, $R_{Dy} = 90$ KN

$(\uparrow +)\ \Sigma F_y = 0$

or, $R_{Ay} + R_{Dy} - 180 = 0$

or, $R_{Ay} + 90 - 180 = 0$

or, $R_{Ay} = 90$ KN

At joint A,

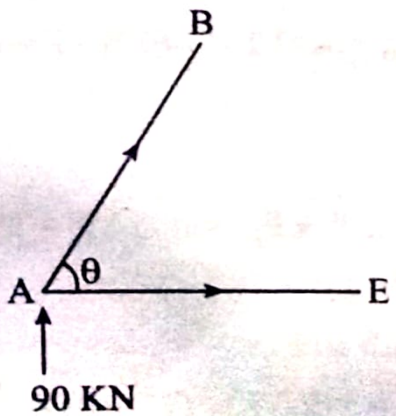


Here, $\tan\theta = \frac{2}{1.5}$



Scanned with CamScanner

or, $\theta = 53.13°$

$(\uparrow +)\ \Sigma F_y = 0$

or, $F_{AB} \sin\theta + 90 = 0$

or, $F_{AB} = -112.5$ KN

$(\overset{+}{\rightarrow})\ \Sigma F_x = 0$

or, $F_{AE} + F_{AB} \cos 53.13° = 0$

or, $F_{AE} - 112.5 \cos 53.13° = 0$

or, $F_{AE} = 67.5$ KN

Since the truss is symmetrical,

$F_{DC} = F_{AB} = -112.5$ KN $= 112.5$ KN (C)

$F_{DE} = F_{AE} = 67.5$ KN (T)

At joint E,

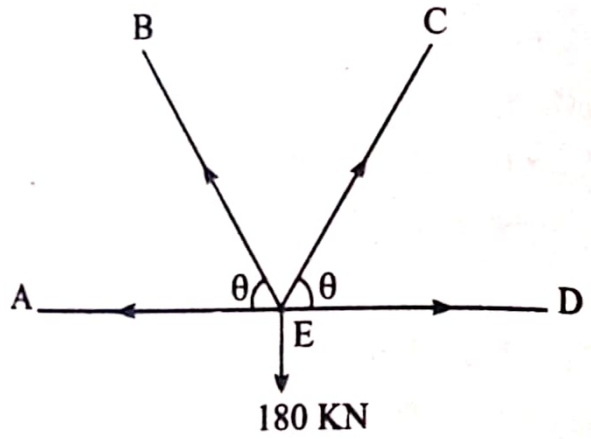


$(\overset{+}{\rightarrow})\ \Sigma F_x = 0$

or, $F_{ED} + F_{EC} \cos 53.13° - F_{AE} - F_{BE} \cos 53.13° = 0$

or, $67.5 + F_{EC} \cos 53.13° - 67.5 - F_{BE} \cos 53.13° = 0$

or, $F_{FC} = F_{BE}$

$(\uparrow +)\ \Sigma F_y = 0$

or, $F_{EB} \sin 53.13° + F_{EC} \sin 53.13° - 180 = 0$

or, $2F_{EC} \sin 53.13° = 180$

or, $F_{EC} = 112.5$ KN

$\therefore$ $F_{EC} = F_{BE} = 112.5$ KN (T)



Scanned with CamScanner

10. **Using the method of joint, determine the force in each member of the truss shown. State whether the member is in tension or compression.**

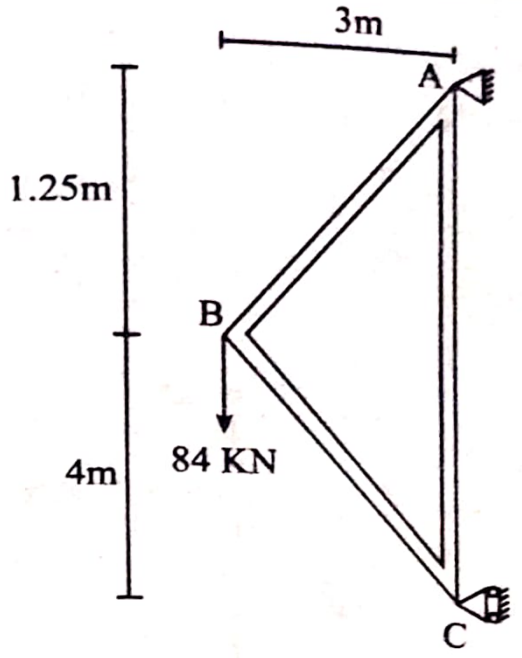


**[2016 Fall, PoU]**

**Solution:**

Calculation of support reactions:

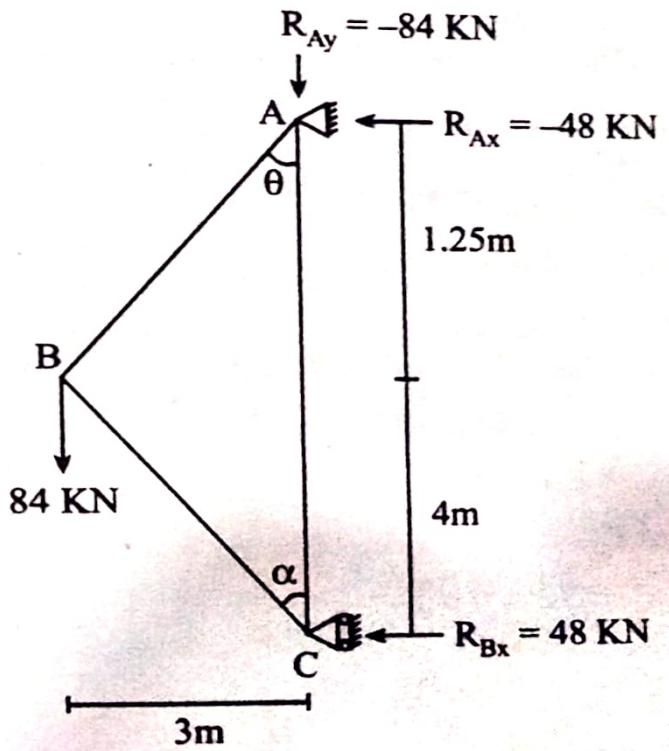


$\circlearrowleft^{+}$ $\Sigma M_A = 0$

or, $R_{Bx} \times 5.25 - 84 \times 3 = 0$



Scanned with CamScanner

or, $R_{Bx} = 48$ KN

$(\overset{+}{\rightarrow})\ \Sigma F_x = 0$

or, $-R_{Ax} - R_{Bx} = 0$

or, $-R_{Ax} - 48 = 0$

or, $R_{Ax} = -48$ KN

$(+\uparrow)\ \Sigma F_y = 0$

or, $-R_{Ay} - 84 = 0$

or, $R_{Ay} = -84$ KN

At joint A:

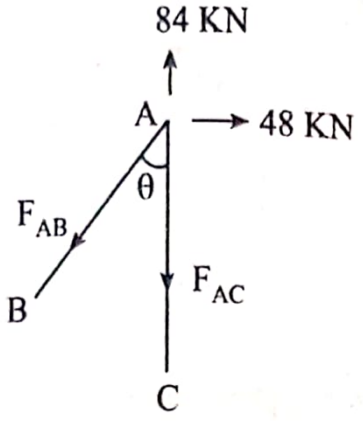


$$\tan\theta = \frac{3}{1.25} \Rightarrow \theta = 67.38°$$

$(\overset{+}{\rightarrow})\ \Sigma F_x = 0$

or, $48 - F_{AB}\sin 67.38° = 0$

or, $F_{AB} = 52$ KN

$(\uparrow +)\ \Sigma F_y = 0$

or, $84 - F_{AC} - F_{AB}\cos 67.38° = 0$

or, $84 - F_{AC} - 52\cos 67.38° = 0$

$\therefore\ F_{AC} = 6.4$ KN

At joint C:

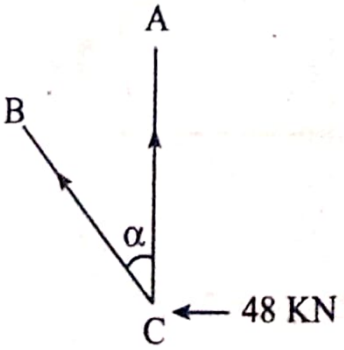




Scanned with CamScanner

$\tan\alpha = \frac{3}{4} \Rightarrow \alpha = 36.86°$

$(+\uparrow)\ \Sigma F_y = 0$

or, $F_{CA} + F_{CB}\cos\alpha = 0$

or, $84 + F_{CB}\cos 36.86° = 0$

$\therefore$ $F_{CB} = -80$ KN

| Member | AB | BC | CA |
|---|---|---|---|
| Nature | T | C | T |
| Magnitude | 52 KN | 80 KN | 64 KN |

**11. Find the forces in members of truss shown.**

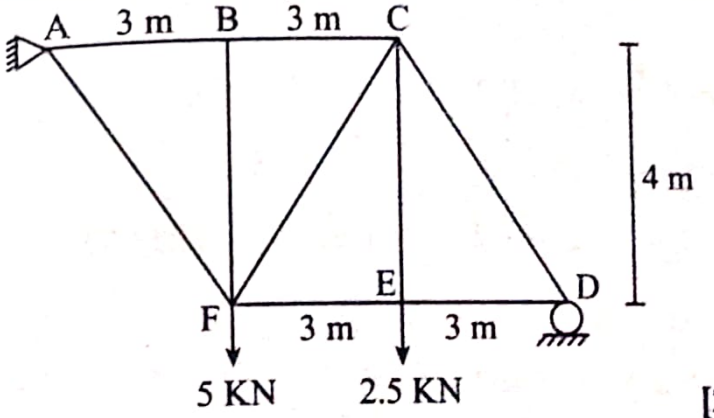


**[2019, PU]**

**Solution:**

Calculation of support reactions.

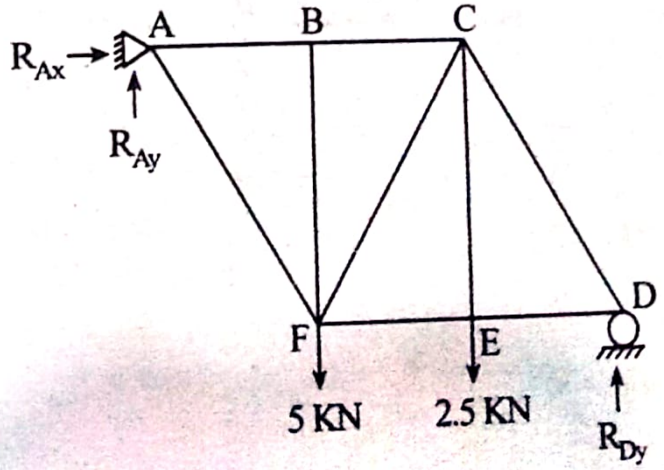


$(+\circlearrowleft)\ \Sigma M_A = 0$

or, $R_{Dy} \times 9 - 5 \times 3 - 2.5 \times 6 = 0$

or, $R_{Dy} = 3.33$ KN



Scanned with CamScanner

$(\uparrow +)\ \Sigma F_y = 0$

or, $R_{Ay} + R_{Dy} - 5 - 2.5 = 0$

or, $R_{Ay} + 3.33 - 7.5 = 0$

or, $R_{Ay} = 4.17$ KN

$(\overset{+}{\rightarrow})\Sigma F_x = 0$

or, $R_{Ax} = 0$

At joint A,

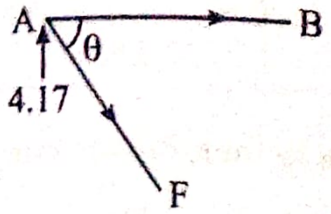


$\text{Tan}\theta = \frac{4}{3} \Rightarrow \theta = 53.13°$

$(\uparrow +)\ \Sigma F_y = 0$

or, $4.17 - F_{AF}\sin 53.13° = 0 \Rightarrow F_{AF} = 5.213$ KN

$(\overset{+}{\rightarrow})\ \Sigma F_x = 0$

or, $F_{AB} + F_{AF}\cos 53.13° = 0$

or, $F_{AB} + 5.213\cos 53.13° = 0 \Rightarrow F_{AB} = -3.128$ KN

Joint B,

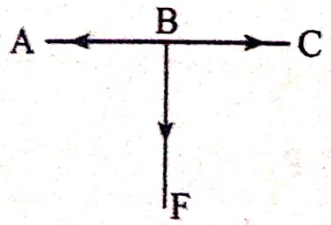


$(\uparrow +)\ \Sigma F_y = 0$

or, $F_{BF} = 0$

$(\overset{+}{\rightarrow})\ \Sigma F_x = 0$

or, $F_{BC} - F_{BA} = 0$

or, $F_{BC} - (-3.128) = 0$

or, $F_{BC} = -3.128$KN



Scanned with CamScanner

At joint D,

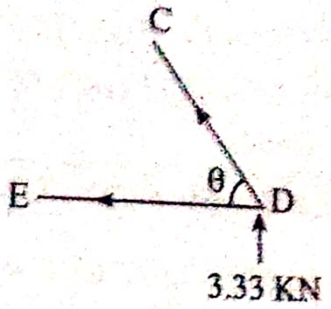


Here, $\theta = 53.13°$

$(\uparrow +)\ \Sigma F_y = 0$

or, $F_{DC} \sin 53.13° + 3.33 = 0$

or, $F_{DC} = -4.163$ KN

$(\overset{+}{\rightarrow})\ \Sigma F_x = 0$

or, $-F_{DE} - F_{DC} \cos 53.13° = 0$

or, $-F_{DE} - (-4.163) \cos 53.13° = 0$

or, $F_{DE} = 2.49$ KN

At joint E,

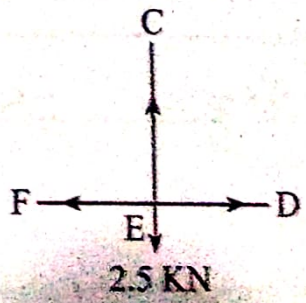


$(\uparrow +)\ \Sigma F_y = 0$

or, $F_{EC} - 2.5 = 0 \Rightarrow F_{EC} = 2.5$ KN

$(\overset{+}{\rightarrow})\ \Sigma F_x = 0$

or, $F_{ED} - F_{EF} = 0$

or, $2.49 = F_{EF} \Rightarrow F_{EF} = 2.49$ KN

At joint F,

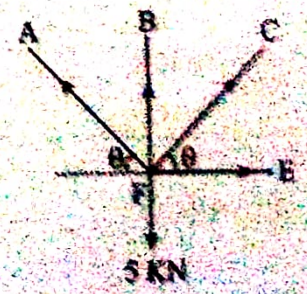




Scanned with CamScanner

$(\overset{+}{\rightarrow})\ \Sigma F_x = 0$

or, $F_{FC}\cos 53.13° - F_{FA}\cos 53.13° + F_{FE} = 0$

or, $F_{FC}\cos 53.13° - 5.213\cos 53.13° + 2.49 = 0$

or, $F_{FC} = 1.06$ KN

| Member | AB | BC | CD | DE | CE | EF | CF | BF | AF |
|---|---|---|---|---|---|---|---|---|---|
| Magnitude (KN) | 3.128 | 3.128 | 4.163 | 2.49 | 2.5 | 2.49 | 1.06 | 0 | 5.213 |
| Nature | C | C | C | T | T | T | T | - | T |

12. Analyze the force in members BC, BF and EF of the following truss. State with graphics, the members are in tension or compression.

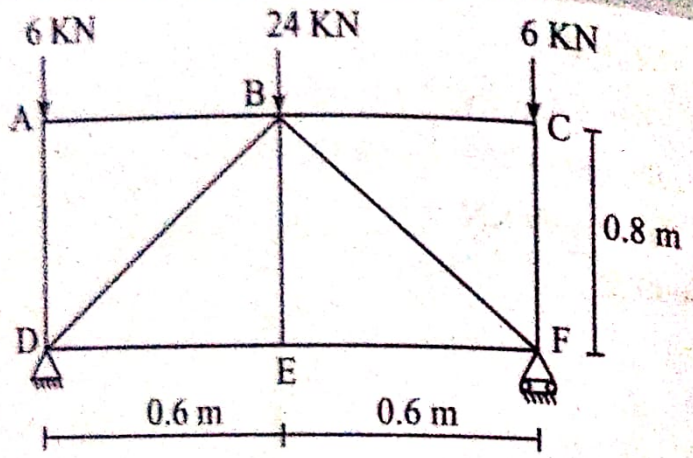


[2019 Fall, PoU]

**Solution:**

**Calculation of support reactions:**

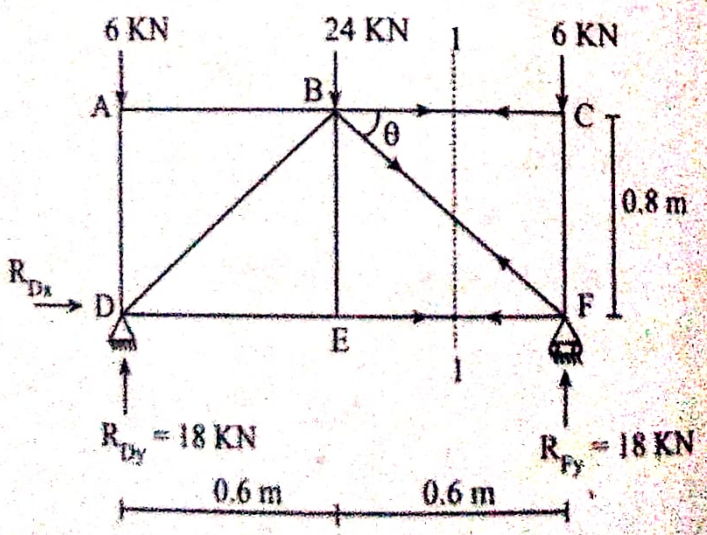


$(\overset{+}{\rightarrow})\ \Sigma F_x = 0 \Rightarrow R_{Dx} = 0$

$M_D\ (+\circlearrowleft) = 0$



Scanned with CamScanner

or, $R_{Fy} \times (1.2) - 24 \times 0.6 - 6 \times 1.2 = 0$

or, $R_{Fy} = 18$ KN

$(+\uparrow)$ $(\Sigma F_y) = 0$

or, $R_{Dy} + R_{Fy} - 6 - 24 - 6 = 0$

or, $R_{Dy} + 18 - 36 = 0$

or, $R_{Dy} = 18$ KN

**Using Method of Section**

Considering section 1–1,

For member BC,

$(\circlearrowleft +)$ $\Sigma M_F = 0$ [Observe left of the section 1 – 1]

or, $R_{Dy} \times (1.2) - 6 \times (1.2) - 24 \times (0.6) + F_{BC} \times 0.8 = 0$

or, $18 \times (1.2) - 7.2 - 14.4 + F_{BC} \times 0.8 = 0$

$\therefore$ $F_{BC} = 0$

For member BF,

$(+\uparrow)$ $\Sigma F_y = 0$ [Observe left of the section 1 – 1]

or, $-6-24 + R_{Dy} - F_{BF} \sin\theta = 0$

In $\Delta BFC$, $\tan\theta = \dfrac{0.8}{0.6}$

or, $\theta = 53.13°$

or, $-30 + 18 - F_{BF} \sin(53.13) = 0$

or, $-12 - F_{BF} \sin(53.13) = 0$

or, $F_{BF} = -15$ KN

$\therefore$ The member is in compression. So, $F_{BF} = 15$ KN (C)

For member EF,

$(+\circlearrowright)$ $\Sigma M_B = 0$ [Observe right of the section 1 – 1]

or, $R_{Fy} \times 0.6 - 6 \times 0.6 - F_{EF} \times 0.8 = 0$

or, $18 \times 0.6 - 6 \times 0.6 = F_{EF} \times 0.8$

or, $F_{EF} = 9$ KN

$\therefore$ The member is in tension. So, $F_{EF} = 9$KN (T)

| Member | BC | BF | EF |
|---|---|---|---|
| Magnitude (KN) | 0 | 15 KN | 9 KN |
| Nature | - | C | T |



Scanned with CamScanner

13. **Find the member forces of given truss.**

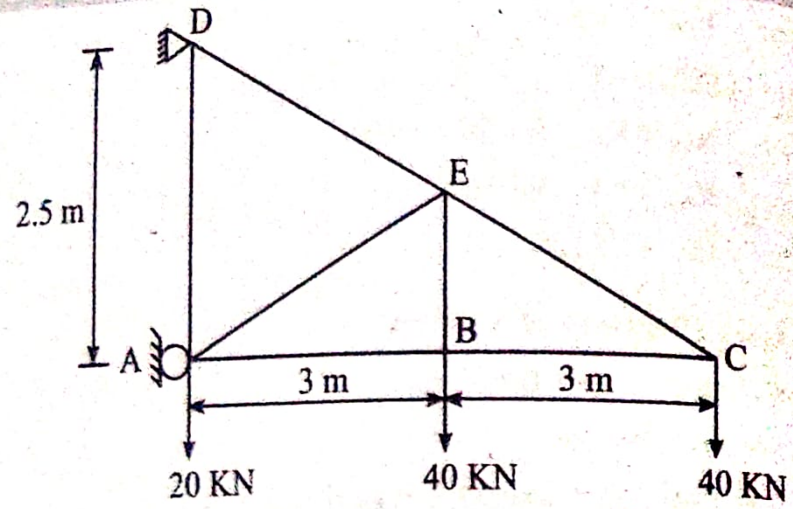


**[2019 Spring, PoU]**

**Solution:**

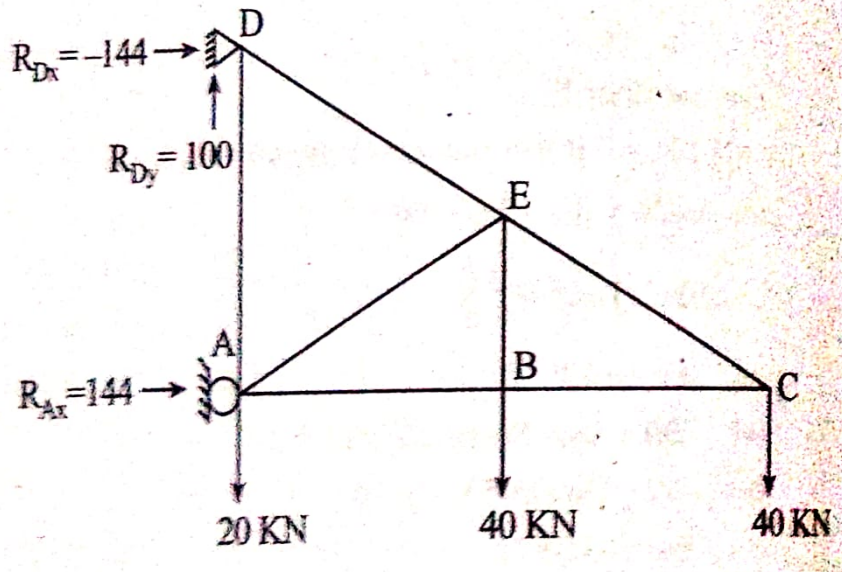


$(+\circlearrowleft)\Sigma M_D = 0$

or, $-40 \times 3 - 40 \times 6 + R_{Ax} \times (2.5) = 0$

or, $R_{Ax} = 144$ KN

$(\overrightarrow{+})\Sigma F_x = 0$

or, $R_{Ax} + R_{Dx} = 0$

or, $144 + R_{Dx} = 0 \Rightarrow R_{Dx} = -144$ KN

$(+\uparrow)\Sigma F_y = 0$

or, $R_{Dy} - 20 - 40 - 40 = 0$

or, $R_{Dy} = 100$ KN



Scanned with CamScanner

At joint C,

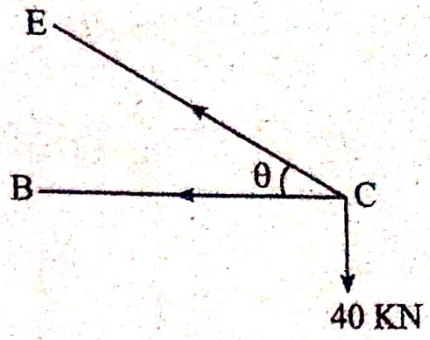


Here,

$$\theta = \text{Tan}^{-1}\left(\frac{2.5}{6}\right) = 22.61°$$

$(+\uparrow)\Sigma F_y = 0$

or, $F_{CE}\sin 22.61° - 40 = 0 \Rightarrow F_{CE} = 104.04$ KN

$(\overrightarrow{+})\Sigma F_x = 0$

or, $-F_{CB} - F_{CE}\cos 22.61° = 0$

or, $-F_{CB} - (-104.04\cos 22.61°) = 0$

or, $-F_{CB} = 96.04$ KN

At joint B,

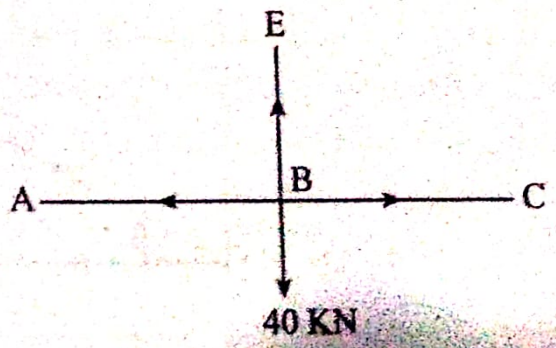


$(+\uparrow)\Sigma F_y = 0$

or, $F_{BE} - 40 = 0 \Rightarrow F_{BE} = 40$ KN

$(\overrightarrow{+})\Sigma F_x = 0$

or, $F_{BC} - F_{BA} = 0 \Rightarrow F_{BA} = 96.04$ KN



Scanned with CamScanner

At joint D,

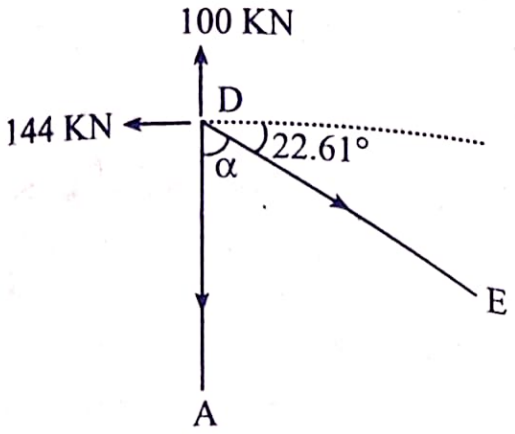


$$\text{Tan}\alpha = \frac{6}{2.5} \Rightarrow \alpha = 67.39°$$

$(\overrightarrow{+})\Sigma F_x = 0$

or, $F_{DE}\cos 22.61° - 144 = 0 \Rightarrow F_{DE} = 155.98$ KN

$(+\uparrow)\Sigma F_y = 0$

or, $100 - F_{DA} - F_{DE}\sin 22.61° = 0$

or, $100 - (155.98\sin 22.61°) = F_{DA} \Rightarrow F_{DA} = 40.04$ KN

At joint A,

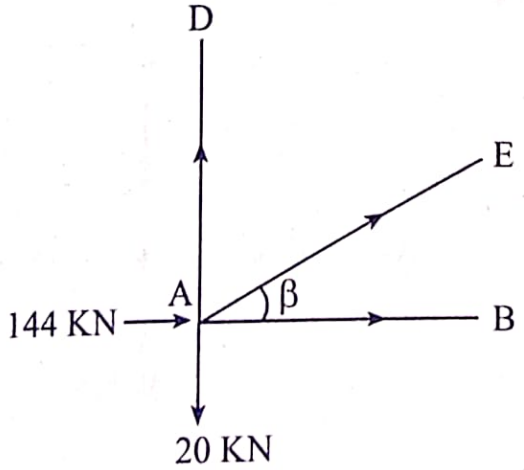


Here,

$$\frac{EB}{3} = \frac{AD}{6} \Rightarrow EB = \frac{3}{6} \times 2.5 = 1.25 \text{ m}$$

So, $\text{Tan}\beta = \frac{1.25}{3} \Rightarrow \beta = 22.61°$

$(\overrightarrow{+})\ \Sigma F_x = 0$



Scanned with CamScanner

or, $F_{AE}\cos 22.61° + F_{AB} = 0$

or, $F_{AE} = \dfrac{-96.04}{\cos 22.61°} = -104.04$ KN

| Member | AB | BC | CE | EA | AD | BE | DE |
|---|---|---|---|---|---|---|---|
| Nature | T | T | T | C | T | T | T |
| Magnitude (KN) | 96.04 | 96.04 | 104.04 | 104.04 | 40.04 | 40 | 155.98 |

**14. Analyze the force in members AB and BC of the truss shown in figure by appropriate method. Take external force $F_1$ = 60 KN and $F_2$ = 30 KN**

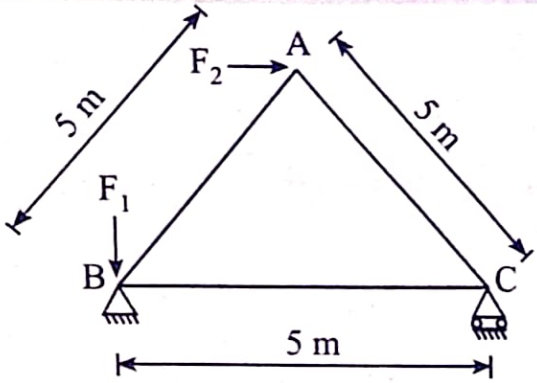


**[2020 spring, PoU]**

**Solution:**

Since the given triangle is equilateral triangle. All interior angles are 60°. We will solve by joint method.

Calculation of support reaction.

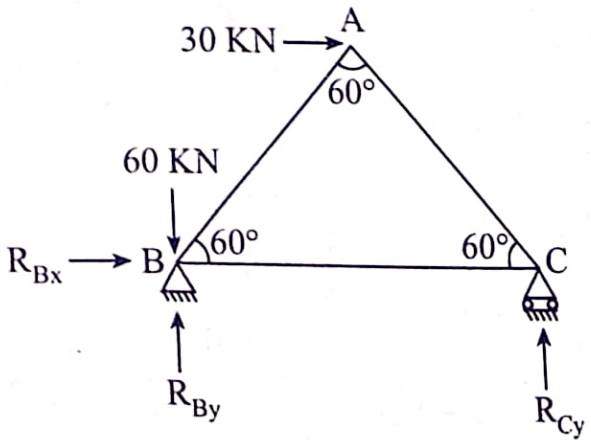


$(+\circlearrowleft)\Sigma M_B = 0$

or, $R_{cy} \times 5 - 30 \times \left[\dfrac{\sqrt{3}}{2} \times 5\right] = 0$



Scanned with CamScanner

[$\because$ Height of equilateral $\Delta = \frac{\sqrt{3}}{2}$ (side)]

or, $5R_{cy} = 129.9$

$\Rightarrow$ $R_{cy} = 25.98$ KN

At joint C,

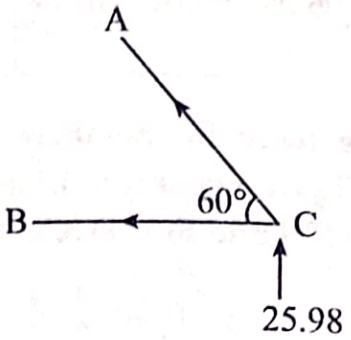


$(+\uparrow)\ \Sigma F_y = 0$

or, $F_{AC}\sin 60° + 25.98 = 0$

or, $F_{AC} = -30$ KN

$(\overrightarrow{+})\Sigma F_x = 0$

or, $-F_{AC}\cos 60° - F_{CB} = 15$KN

or, $-(-30)\cos 60° = F_{CB} \Rightarrow F_{CB} = 15$ KN

At joint A,

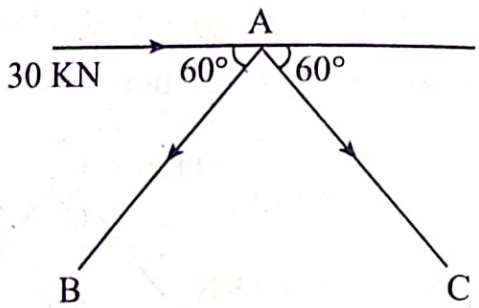


$(+\uparrow)\ \Sigma F_y = 0$

or, $-F_{AC}\sin 60° - F_{AB}\sin 60°$

or, $F_{AB} = -F_{AC} = -(-30) = 30$ KN

| Member | AB | BC |
|---|---|---|
| Nature | T | T |
| Magnitude | 30 KN | 15 KN |



Scanned with CamScanner

15. **Analyze the forces in each member of following truss by method of joints.**

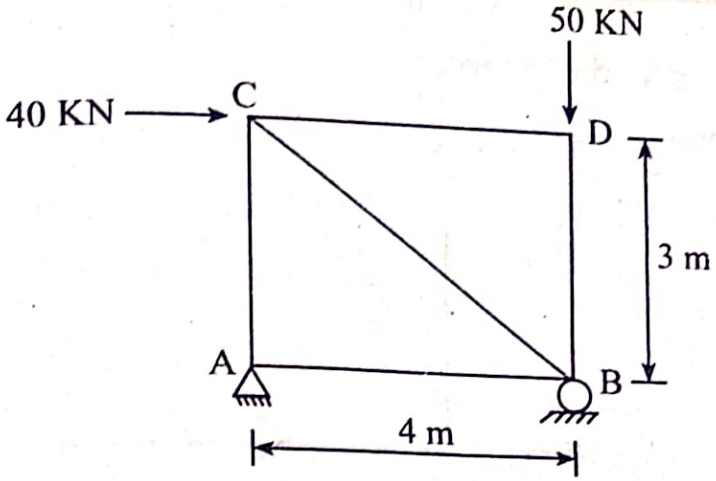


**[2020 Fall, PoU]**

**Solution:**

Calculation of support reactions:

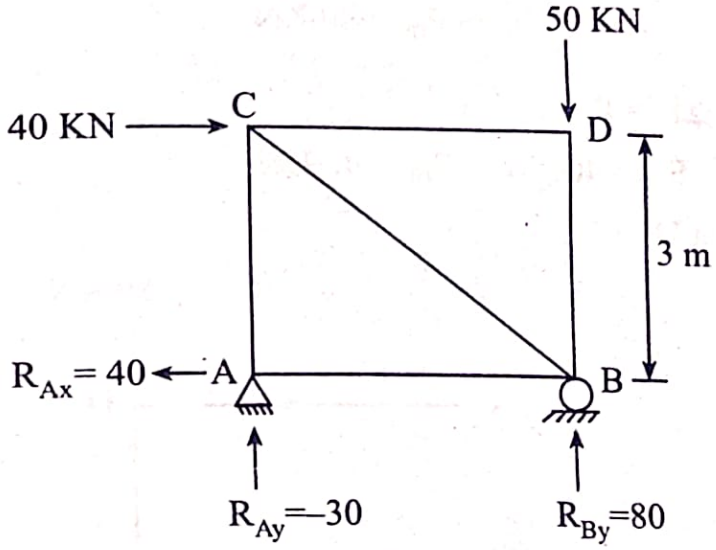


$(\overrightarrow{+})\Sigma F_x = 0$

or, $40 - R_{Ax} = 0 \Rightarrow R_{Ax} = 40$ KN

$(+\circlearrowleft)\Sigma M_A = 0$

or, $R_{By} \times 4 - 50 \times 4 - 40 \times 3 = 0$

or, $R_{By} = 80$ KN

$(+\uparrow)\Sigma F_y = 0$



Scanned with CamScanner

or, $R_{Ay} + R_{By} - 50 = 0$

or, $R_{Ay} + 80 - 50 = 0 \Rightarrow R_{Ay} = -30$ KN

Using method of joints:

At joint A,

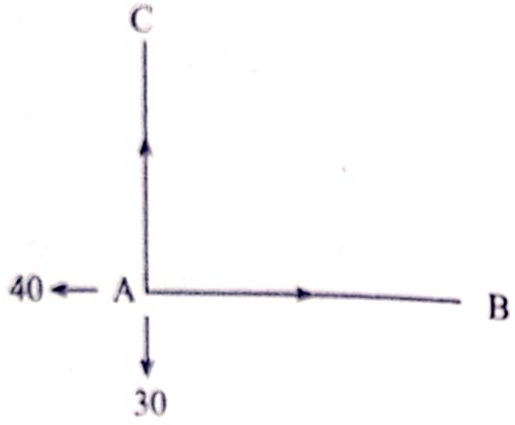


$(+\uparrow)\Sigma F_y = 0$

or, $F_{AC} - 30 = 0 \Rightarrow F_{AC} = 30$ KN

$(\overrightarrow{+})\Sigma F_x = 0$

or, $F_{AB} - 40 = 0 \Rightarrow F_{AB} = 40$ KN

Joint D

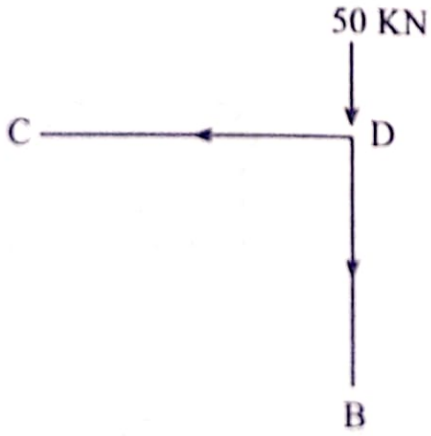


$(\overrightarrow{+})\Sigma F_x = 0$

or, $-F_{CD} = 0 \Rightarrow F_{CD} = 0$

$(+\uparrow)\Sigma F_y = 0$

or, $-50 - F_{DB} = 0 \Rightarrow F_{DB} = -50$ KN



Scanned with CamScanner

At joint C,

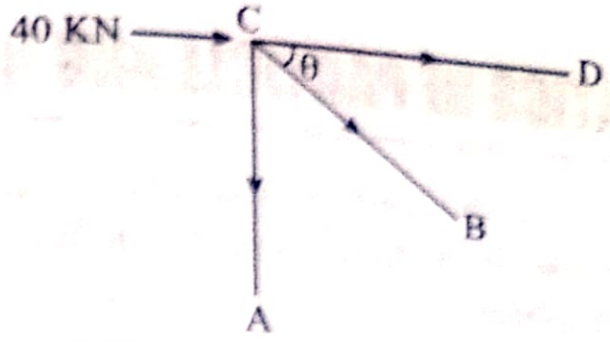


Here,

$$\theta = \text{Tan}^{-1}\left(\frac{3}{4}\right) = 36.86°$$

$(\overrightarrow{+})\ \Sigma F_x = 0$

or, $F_{CD} + 40 + F_{CB}\cos(36.86°) = 0$

or, $F_{CB} = -50$ KN

| Member | AB | AC | CB | CD | BD |
|---|---|---|---|---|---|
| Nature | T | T | C | - | C |
| Magnitude | 40 KN | 30 KN | 50 KN | 0 | 50 KN |



Scanned with CamScanner

or, $R_{Ay} + R_{By} - 50 = 0$

or, $R_{Ay} + 80 - 50 = 0 \Rightarrow R_{Ay} = -30$ KN

Using method of joints:

At joint A,

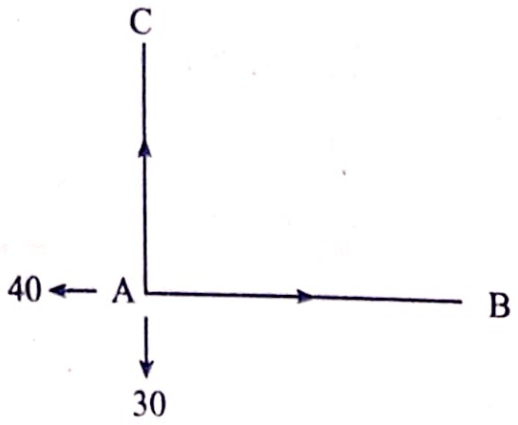


$(+\uparrow)\Sigma F_y = 0$

or, $F_{AC} - 30 = 0 \Rightarrow F_{AC} = 30$ KN

$(\overrightarrow{+})\Sigma F_x = 0$

or, $F_{AB} - 40 = 0 \Rightarrow F_{AB} = 40$ KN

Joint D

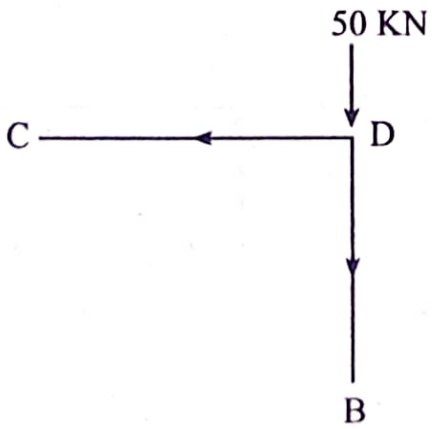


$(\overrightarrow{+})\Sigma F_x = 0$

or, $-F_{CD} = 0 \Rightarrow F_{CD} = 0$

$(+\uparrow)\Sigma F_y = 0$

or, $-50 - F_{DB} = 0 \Rightarrow F_{DB} = -50$ KN



Scanned with CamScanner

At joint C,

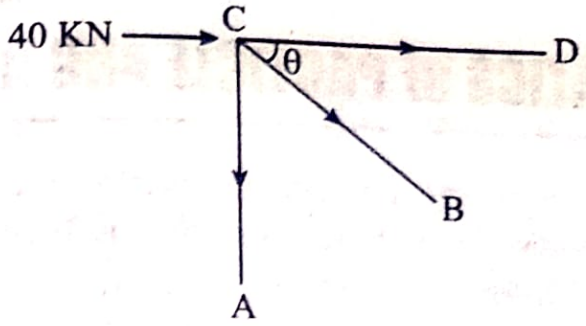


Here,

$$\theta = \text{Tan}^{-1}\left(\frac{3}{4}\right) = 36.86°$$

$(\overrightarrow{+})\ \Sigma F_x = 0$

or, $F_{CD} + 40 + F_{CB}\cos(36.86°) = 0$

or, $F_{CB} = -50$ KN

| Member | AB | AC | CB | CD | BD |
|---|---|---|---|---|---|
| Nature | T | T | C | - | C |
| Magnitude | 40 KN | 30 KN | 50 KN | 0 | 50 KN |



Scanned with CamScanner

CHAPTER - 8

# KINEMATICS OF PARTICLE AND RIGID BODY

*Dynamics* is the part of mechanics that deals with the analysis of bodies in motion. Dynamics is further classified into *kinematics* and *kinetics*.

*Kinematics* is the study of the geometry of motion. It is used to relate displacement, velocity, acceleration, and time, without reference to the cause of the motion.

## 8.1 Rectilinear Kinematics

### Rectilinear Motion of Particles

A particle moving along a straight line is said to be in *rectilinear motion*.

The *average velocity* of the particle over the time interval $\Delta t$ is defined as the quotient of the displacement $\Delta x$ and the time interval $\Delta t$.

$$\text{Average velocity} = \frac{\Delta x}{\Delta t}$$

The *instantaneous velocity* v of the particle at the instant t is obtained from the average velocity by choosing shorter and shorter time intervals $\Delta t$ and displacements $\Delta x$.

$$\text{Instantaneous velocity (v)} = \lim_{\Delta t \to 0} \frac{\Delta x}{\Delta t} = \frac{dx}{dt}$$

The *average acceleration* of the particle over the time interval $\Delta t$ is defined as the quotient of $\Delta v$ and $\Delta t$.

$$\text{Average acceleration} = \frac{\Delta v}{\Delta t}$$

The *instantaneous acceleration* a of the particle at the instant t is obtained from the average acceleration by choosing smaller and smaller values for $\Delta t$ and $\Delta v$.

$$\text{Instantaneous acceleration (a)} = \lim_{\Delta t \to 0} \frac{\Delta v}{\Delta t} = \frac{dv}{dt}$$



Scanned with CamScanner

The acceleration a can also be expressed as:

$$a = \frac{d^2x}{dt^2}$$

$$a = v\frac{dv}{dx}$$

### Uniform Rectilinear Motion

In *uniform rectilinear motion*, the acceleration of the particle is zero for every value of t. The velocity v is therefore constant.

$$\frac{dx}{dt} = v = \text{constant}$$

### Uniformly Accelerated Rectilinear Motion

In this motion, the acceleration a of the particle is constant.

$$\frac{dv}{dt} = a = \text{constant}$$

Also, we can write

$$v\frac{dv}{dx} = a = \text{constant}$$

## 8.2 Motion of Several Particles

### 8.2.1 Relative Motion of Two Particles

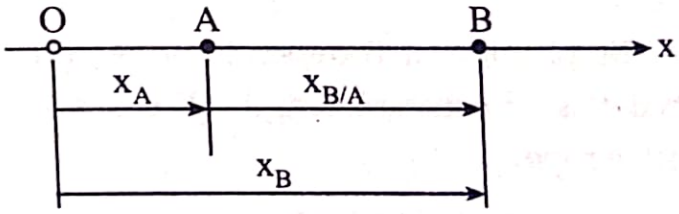


Consider two particles A and B moving along the same straight line. Let position coordinate of A = $x_A$, position coordinate of B = $x_B$.

The *relative position of B w.r.t. A* is $x_{B/A}$. From figure, we can write

$$x_{B/A} = x_B - x_A$$

$$\text{or, } x_B = x_A + x_{B/A} \quad \text{.....(i)}$$

Differentiating equation (i) w.r.t. t, we get

$$v_B = v_A + v_{B/A} \quad \text{.....(ii)}$$



Scanned with CamScanner

where $v_{B/A}$ is known as relative velocity of B w.r.t. A.

Again, differentiating equation (ii) w.r.t. t, we get

$a_B = a_A + a_{B/A}$ .....(ii)

where $a_{B/A}$ is known as relative acceleration of B w.r.t. A.

### 8.2.2 Dependent Motion

When the position of a particle depends upon the position of another or several other particles, the motion is known as *dependent motion*. Example: Pulley system

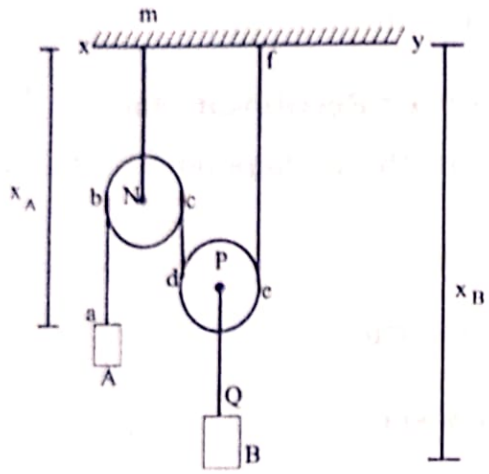


**Explanation:**

Let the position of A and B be $x_A$ and $x_B$ with reference to xy-line.

Clearly, The position of B depends on A. From figure, the rope abcdef is of constant length (We are considering an inextensible rope)

ab + bc + cd + de + ef = constant

The length of portion of rope bc and de wrapped around the pulley remains always same. So,

ab + cd + ef = constant.

$\Rightarrow (x_A + MN) + (x_B - MN - PQ) + x_B - PQ = \text{constant}$

We note that the length of MN, PQ remain constant

$\therefore x_A + 2x_B = \text{constant}$ .....(i)

On differentiating two times successively,

$v_A + 2v_B = 0$ .....(ii)



Scanned with CamScanner

$a_A + 2a_B = 0$ .....(iii)

These equations suggest that motion of A is dependent on motion of B.

## 8.3 Curvilinear Motion

The motion of a particle along a curved path, other than a straight line is known as *curvilinear motion*. Examples: projectile motion, satellite motion.

### 8.3.1 Equations for Projectile Motion

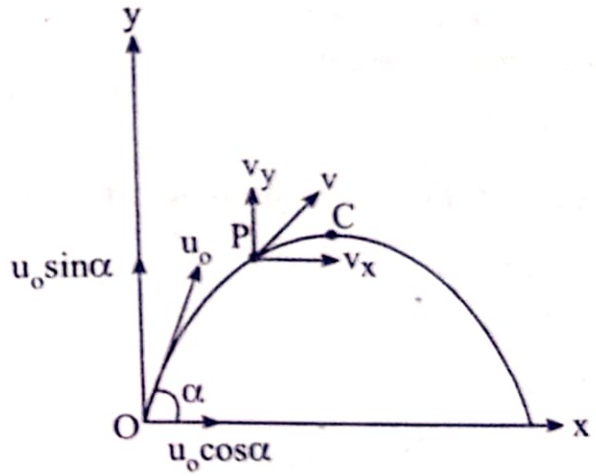


Consider a particle projected with velocity u at an angle of α with the horizontal as shown in figure.

Suppose the particle reaches at point P after time t. Let the velocity of the particle at point P be v.

For motion in x-direction,

$a_x = 0,\ u_x = u\cos\alpha$

$x = u_x t = (u\cos\alpha)\, t$ .....(i)

For motion in y-direction,

$a_y = -g,\ v_y = u_y + a_y t = u\sin\alpha - gt$

$$y = (u_y)t + \frac{1}{2}a_y t^2 = (u\sin\alpha)t - \frac{1}{2}gt^2$$

From equation (i),

$$x = (u\cos\alpha)t \Rightarrow t = \frac{x}{u\cos\alpha}$$

$$y = (u\sin\alpha)\times\frac{x}{u\cos\alpha} - \frac{1}{2}\times g\times\left(\frac{x}{u\cos\alpha}\right)^2$$



Scanned with CamScanner

$$= x\tan\alpha - \frac{1}{2}\frac{gx^2}{u^2\cos^2\alpha}$$

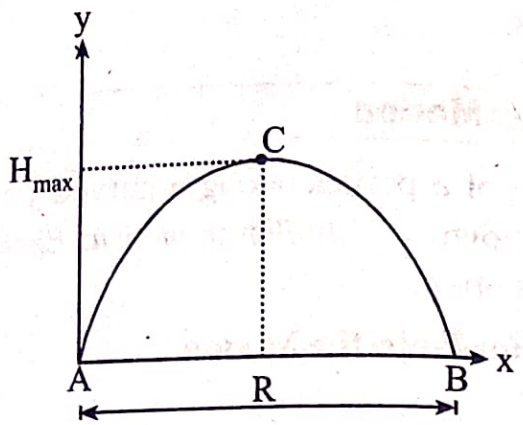


At maximum height i.e., at C, $v_y = 0$

or, $u\sin\alpha - gt = 0$

If T is the time of flight, then it takes $\frac{T}{2}$ to reach C.

or, $u\sin\alpha - g\left(\frac{T}{2}\right) = 0$

or, $T = \frac{2u\sin\alpha}{g}$

When $t = T$, $x = R$

or, $(u\cos\alpha)T = R$

or, $R = u\cos\alpha \times \frac{2u\sin\alpha}{g} = \frac{u^2\sin 2\alpha}{g}$

When $t = \frac{T}{2}$, $y = H_{max}$

or, $(u\sin\alpha)\frac{T}{2} - \frac{1}{2}\times g\times\left(\frac{T}{2}\right)^2 = H_{max}$

or, $H_{max} = (u\sin\alpha)\frac{(2u\sin\alpha)}{2g} - \frac{1}{2}\times g\times\left(\frac{2u\sin\alpha}{2g}\right)^2$

$$= \frac{u^2\sin^2\alpha}{g} - \frac{1}{2}\frac{u^2\sin^2\alpha}{g}$$

$$= \frac{u^2\sin^2\alpha}{g} - \frac{u^2\sin^2\alpha}{2g}$$

$\therefore H_{max} = \frac{u^2\sin^2\alpha}{2g}$



Scanned with CamScanner

### 8.3.2 Tangential and Normal Components of Acceleration

Consider a particle moving in xy-plane as shown in figure. Let the particle be at P and P' at time t and t+Δt respectively. Let $\hat{e}_t$ and $\hat{e}_n$ be the unit vectors, directed along the tangent and along the normal or towards the center of curvature of the path respectively. Unit vector $\hat{e}_t$ and $\hat{e}_n$ will generally change in their directions as the particle moves from one point to another along the curved path.

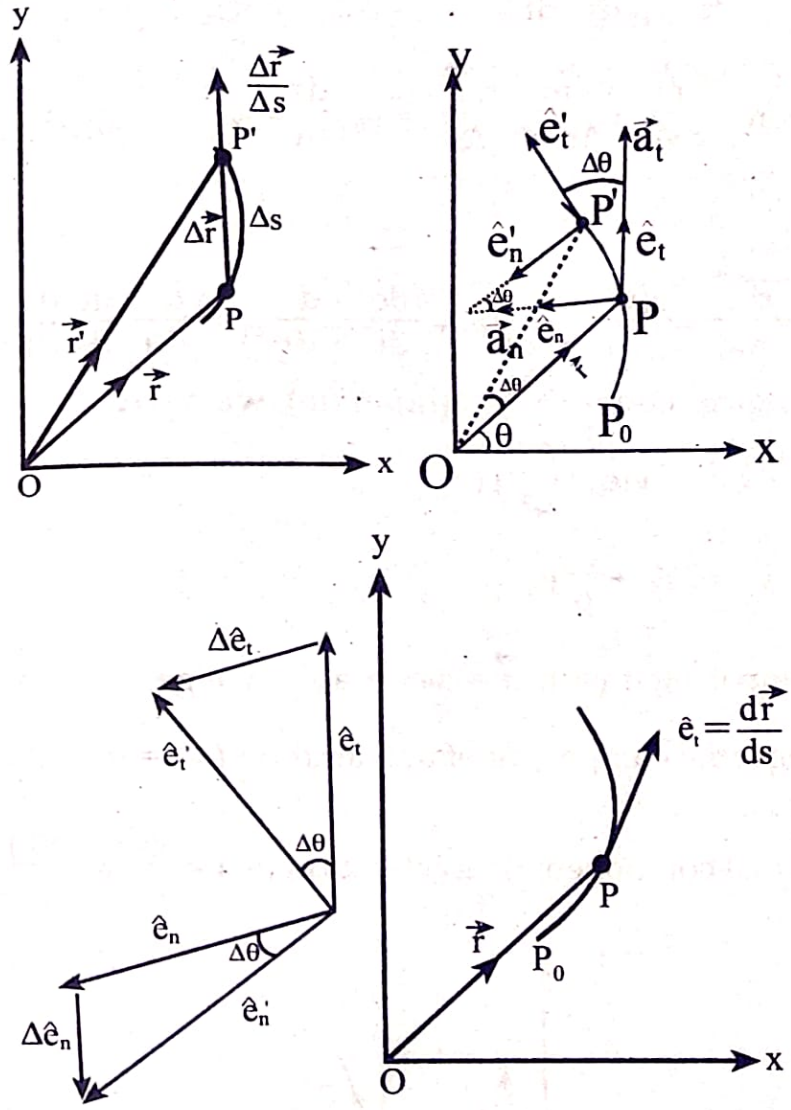


Let ρ be the radius of curvature of the path at point P, $\hat{e}_t$ and $\hat{e}_t'$ be the tangent unit vectors at P and P'.

$\Delta s = PP' = \rho\Delta\theta$

$\Delta\hat{e}_t = \hat{e}_t' - \hat{e}_t \cong \Delta\theta\hat{e}_n$



Scanned with CamScanner

$$\frac{d\theta}{ds} = \lim_{\Delta s \to 0} \frac{\Delta\theta}{\Delta s} = \lim_{\Delta s \to 0} \frac{\Delta\theta}{\rho\Delta\theta} = \frac{1}{\rho} \text{ .....(i)}$$

$$\frac{d\hat{e}_t}{d\theta} = \lim_{\Delta\theta \to 0} \frac{\Delta\hat{e}_t}{\Delta\theta} = \lim_{\Delta\theta \to 0} \frac{\Delta\theta\hat{e}_n}{\Delta\theta} = \hat{e}_n \text{ .....(ii)}$$

$$v = \lim_{\Delta t \to 0} \frac{\Delta s}{\Delta t} = \lim_{\Delta t \to 0} \frac{\rho\Delta\theta}{\Delta t} = \frac{\rho d\theta}{dt}$$

or, $v = \rho\dot{\theta}$ .....(iii)

$$\vec{v} = \frac{d\vec{r}}{dt} = \frac{d\vec{r}}{ds}\frac{ds}{dt}$$

where, $\frac{d\vec{r}}{ds} = \lim_{\Delta s \to 0} \frac{\Delta\vec{r}}{\Delta s} = \hat{e}_t$, $\frac{ds}{dt} = v$

So, $\vec{v} = \hat{e}_t v = v\hat{e}_t$

$$\vec{a} = \frac{d\vec{v}}{dt} = \frac{d(v\hat{e}_t)}{dt} = \frac{dv}{dt}\hat{e}_t + \frac{vd\hat{e}_t}{dt} = \frac{dv}{dt}\hat{e}_t + \frac{vd\hat{e}_t}{d\theta}\frac{d\theta}{ds}\frac{ds}{dt} \text{ .....(iv)}$$

Using equations (i), (ii), (iii) in (iv), we have

$$\vec{a} = \dot{v}\,\hat{e}_t + v(\hat{e}_n)\left(\frac{1}{\rho}\right) \text{ (v)}$$

or, $\vec{a} = \dot{v}\,\hat{e}_t + \frac{v^2}{\rho}\hat{e}_n$

Comparing it with $\vec{a} = a_t\hat{e}_t + a_n\hat{e}_n$, we get

tangential component of acceleration $(a_t) = \dot{v}$

normal component of acceleration $(a_n) = \frac{v^2}{\rho} = \frac{(\rho\dot{\theta})^2}{\rho} = \rho\dot{\theta}^2$

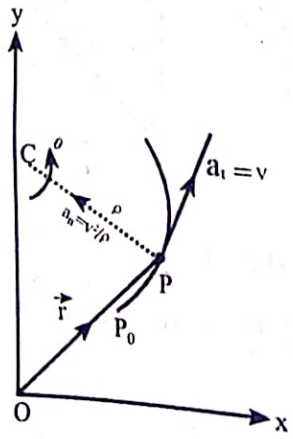




Scanned with CamScanner

If $y = f(x)$ is the equation of the path, then the radius of curvature of the path can be calculated as

$$\rho = \frac{\left[1+\left(\frac{dy}{dx}\right)^2\right]^{3/2}}{\frac{d^2y}{dx^2}}$$

The tangential component of the acceleration reflects a change in speed of the particle, while its normal component reflects a change in the direction of motion of the particle.

### 8.3.3 Radial and Transverse Components of Acceleration

In certain problems of plane motion, the position of the particle is defined by its polar coordinates r and θ. It is then convenient to resolve the velocity and acceleration of particle into radial and transverse components.

Consider that the position of the particle at P is defined by the polar coordinates r and θ as shown in figure. Let $\hat{e}_r$ and $\hat{e}_\theta$ denote the unit vector in radial and transverse direction respectively.

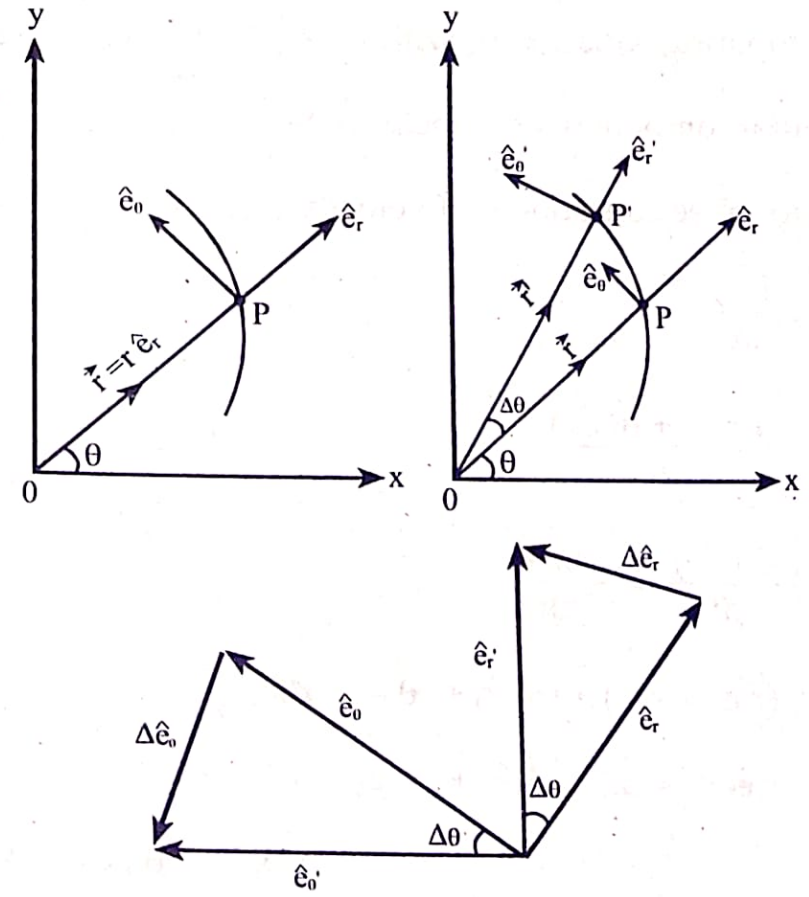




Scanned with CamScanner

$$\dot{\hat{e}}_r = \frac{d\hat{e}_r}{dt} = \frac{d\hat{e}_r}{d\theta}\frac{d\theta}{dt} = \hat{e}_\theta \dot{\theta}$$

$$\dot{\hat{e}}_\theta = \frac{d\hat{e}_\theta}{dt} = \frac{d\hat{e}_\theta}{d\theta}\frac{d\theta}{dt} = -\hat{e}_r \dot{\theta}$$

$$\vec{v} = \frac{d\vec{r}}{dt}$$

$$= \frac{d(r\hat{e}_r)}{dt}$$

$$= \frac{r d\hat{e}_r}{dt} + \hat{e}_r \frac{dr}{dt}$$

$$= r\dot{\hat{e}}_r + \dot{r}\hat{e}_r$$

$$= r\dot{\theta}\hat{e}_\theta + \dot{r}\hat{e}_r$$

$$= \dot{r}\hat{e}_r + r\dot{\theta}\hat{e}_\theta \text{ .....(i)}$$

Comparing equation (i) with $\vec{v} = v_r\hat{e}_r + v_\theta\hat{e}_\theta$, we have

Radial component of velocity $(v_r) = \dot{r}$

Transverse component of velocity $(v_\theta) = r\dot{\theta}$

$$\vec{a} = \frac{d\vec{v}}{dt}$$

$$= \frac{d(\dot{r}\hat{e}_r + r\dot{\theta}\hat{e}_\theta)}{dt}$$

$$= \frac{d(\dot{r}\hat{e}_r)}{dt} + \frac{d(r\dot{\theta}\hat{e}_\theta)}{dt}$$

$$= (\ddot{r}\hat{e}_r + \dot{r}\dot{\hat{e}}_r) + (\dot{r}\dot{\theta}\hat{e}_\theta + r\ddot{\theta}\hat{e}_\theta + r\dot{\theta}\dot{\hat{e}}_\theta)$$

$$= \ddot{r}\hat{e}_r + \dot{r}\dot{\theta}\hat{e}_\theta + \dot{r}\dot{\theta}\hat{e}_\theta + r\ddot{\theta}\hat{e}_\theta - r\dot{\theta}^2\hat{e}_r$$

$$[\because \dot{\hat{e}}_r = \hat{e}_\theta\dot{\theta},\ \dot{\hat{e}}_\theta = -\hat{e}_r\dot{\theta}]$$



Scanned with CamScanner

or, $\vec{a} = (\ddot{r} - r\dot{\theta}^2)\,\hat{e}_r + (r\ddot{\theta} + 2\dot{r}\dot{\theta})\,\hat{e}_\theta$ .....(ii)

Comparing equation (ii) with $\vec{a} = a_r\,\hat{e}_r + a_\theta\,\hat{e}_\theta$, we have

Radial component of acceleration $(a_r) = \ddot{r} - r\dot{\theta}^2$

Transverse component of acceleration $(a_\theta) = r\ddot{\theta} + 2\dot{r}\dot{\theta}$

If we take the case of a particle moving along a circular path with its centre at the origin (O), we have

$r$ = constant implies $\dot{r} = 0$ and $\ddot{r} = 0$

## SOLUTION TO IMPORTANT QUESTIONS

**1. A particle moving in a straight line has an acceleration, $a = \sqrt{v}$, its displacement and velocity at time t = 2 sec, are $\frac{128}{3}$ m and 16 m/s. Find the displacement, velocity, acceleration at time t = 3 sec.**

**Solution:**

Acceleration, $a = \sqrt{v}$ .....(1)

Also, $a = \frac{dv}{dt}$ .....(2)

From (i) & (2),

$$\frac{dv}{dt} = \sqrt{v}$$

or, $\frac{1}{\sqrt{v}}\,dv = dt$

Integrating both sides, we get

$t = 2\sqrt{v} + c$ .....(3) where c is integration constant.

Now, when t = 2 sec, v = 16 m/s

Substituting these values in equation (3), we get

$c = -6$

∴ Equation (3) reduces to



Scanned with CamScanner

$$t = 2\sqrt{v} - 6$$

$$\text{or, } \frac{t+6}{2} = \sqrt{v}$$

$$\therefore v = \left(\frac{t+6}{2}\right)^2 \text{.....(5)}$$

$$\text{But, } v = \frac{dx}{dt}$$

$\therefore$ Equation (5) becomes

$$\frac{dx}{dt} = \left(\frac{t+6}{2}\right)^2$$

$$\text{or, } dx = \left(\frac{t+6}{2}\right)^2 dt$$

On integration,

$$x = \frac{(t+6)^3}{12} + c_1 \text{.....(6)}$$

Given, when $t = 2$ sec, $x = \frac{128}{3}$ m

$\therefore$ Equation (6) becomes:

$$\frac{128}{3} = \frac{(2+6)^3}{12} + c_1$$

$$\Rightarrow c_1 = 0$$

$\therefore$ Equation (6) reduces to

$$x = \frac{(t+6)^3}{12} \text{.....(7)}$$

Hence, when $t = 3$ sec,

$x = 60.75$ m (From equation 7)

$v = 20.25$ m/s (From equation 5)

$a = 4.5$ m/s$^2$ (From equation 1)

**2. The motion of a vibrating particle is defined by the equations, $x = 100 \sin \pi t$ and $y = 25 \cos 2\pi t$, where x and y are expressed in mm and t in sec.**

**a. Determine the velocity and acceleration when $t = 1$ sec.**

**b. Find the nature of path of the particle.**



Scanned with CamScanner

**Solution:**

$v_x = \dot{x} = 100\pi \cos \pi t$ , $v_y = \dot{y} = -50\, \pi \sin 2\pi t$

$a_x = \dot{v}_x = \ddot{x} = -100\pi^2 \sin\pi t$, $a_y = \dot{v}_y = \ddot{y} = -100\, \pi^2 \cos 2\pi t$

**a)** At t = 1 sec,

$$v = \sqrt{v_x^2 + v_y^2}$$

$$= \sqrt{\{100\pi \cos(\pi)\}^2 + \{-50\pi \sin 2\pi\}^2}$$

$$= 100\pi \text{mm/sec}$$

$$\theta = \tan^{-1}\left(\frac{v_y}{v_x}\right) = \tan^{-1}\left(\frac{50\pi \sin 2\pi}{100\pi \cos\pi}\right) = 0^\circ$$

$$a = \sqrt{a_x^2 + a_y^2}$$

$$= \sqrt{\{-100\pi^2 \sin\pi\}^2 + \{-100\pi^2 \cos 2\pi\}^2}$$

$$= 100\pi^2 \text{mm/sec}^2$$

$$\alpha = \tan^{-1}\frac{a_y}{a_x} = 270^\circ$$

**b)** $x = 100 \sin\pi t$

or, $\frac{x}{100} = \sin\pi t$

or, $\left(\frac{x}{100}\right)^2 = \sin^2\pi t$ .....(i)

$y = 25\cos 2\pi t$

or, $\frac{y}{25} = \cos 2\pi t$

or, $\frac{y}{25} = 2\cos^2\pi t - 1$

or, $\left(\frac{y}{25} + 1\right) = 2\cos^2\pi t$

or, $\frac{y+25}{50} = \cos^2\pi t$ .....(ii)

Adding equations (i) & (ii), we get

$$\left(\frac{x}{100}\right)^2 + \left(\frac{y+25}{50}\right) = \sin^2\pi t + \cos^2\pi t$$



Scanned with CamScanner

or, $\frac{x^2}{10000} + \frac{y}{50} + \frac{1}{2} = 1$

or, $x^2 + 200y = 5000$ which is the equation of parabola.

Hence, the nature of the path of particle is parabolic.

**3. The acceleration of a particle is given by a relation $a = v^3$. It is known that at time $t = 0$, position is $-2$ m and velocity is 1m/sec. Find the displacement, position, velocity and acceleration at instant of $\frac{1}{4}$ sec.**

**Solution:**

$a = v^3$

or, $v\frac{dv}{dx} = v^3$

or, $\frac{dv}{v^2} = dx$

Integrating on both sides, we get

$\int \frac{dv}{v^2} = \int dx$

or, $\frac{v^{-2+1}}{-2+1} = x + c_1$

or, $\frac{-1}{v} = x + c_1$ ... (i) ; $c_1$ = Integration constant

Using the condition that at,

$t = 0$, $x = -2$m & $v = 1$ m/sec, we get

$\frac{-1}{1} = -2 + c_1$

or, $c_1 = 1$

$\therefore$ Equation (i) is reduced to

$\frac{-1}{v} = x + 1$.....(ii)

or, $\frac{-1}{\frac{dx}{dt}} = x + 1$



Scanned with CamScanner

or, $-dt = (x+1)\,dx$

Integrating both sides, we get,

$$-\int dt = \int (x+1)\,dx$$

or, $-t = \frac{x^2}{2} + x + c_2$ .....(iii)

At $t = 0$, $x = -2$ m.

Therefore, equation (iii) becomes

$$0 = \frac{(-2)^2}{2} - 2 + c_2$$

or, $c_2 = 0$

Now, equation (iii) is reduced to

$$-t = \frac{x^2}{2} + x \text{ .....(iv)}$$

From equation (iv), at $t = \frac{1}{4}$ sec,

$$-\frac{1}{4} = \frac{x^2}{2} + x$$

or, $x^2 + 2x + \frac{1}{2} = 0$

or, $x = -1.707$ m

From equation (ii) ,

$$\frac{-1}{v} = x_{\text{at } t=0.25\text{sec}} + 1$$

or, $\frac{-1}{v} = -1.707 + 1$

or, $v = 1.414$ m/s

$a = v^3 = (1.414)^3 = 2.82$ m/s$^2$

Displacement $= x_{\text{at } t=0.25\text{sec}} - x_{\text{at } t=0}$

$= (-1.707) - (-2)$

$= 0.293$ m



Scanned with CamScanner

**4. A particle starting from origin is subjected to acceleration such that $a_x = -4m/s^2$ and $a_y = -8m/s^2$. If the initial velocity is 100 $ms^{-1}$ directed at a slope of 2:3. compute the radius of curvature of the path after 5 sec. Also, calculate the position at the end of 5 sec.**

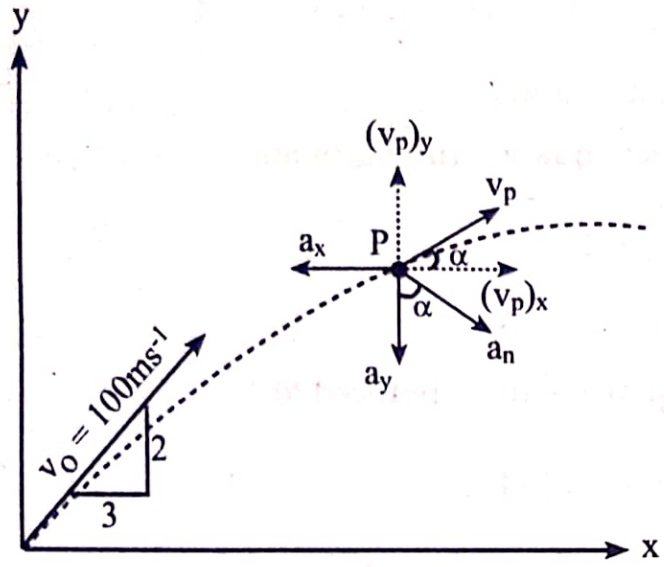


**Solution:**

Let the particle be at point P at the end of 5 sec.

The velocity is given by tangent at P.

Since $a_x = -4m/s^2$, it is directed leftwards and since $a_y = -8m/s^2$, it is directed downwards. Velocity at P is resolved along x and y-direction.

Normal acceleration is directed towards the center of curvature and is perpendicular to $v_p$. Let $v_p$ makes an angle α with $(v_p)_x$. Then, angle between $a_y$ and $a_n$ is also α.

$v_0 = 100ms^{-1}$

$$(v_x)_0 = 100\times\frac{3}{\sqrt{13}} = 83.20ms^{-1},\ (v_y)_0 = 100\times\frac{2}{\sqrt{13}} = 55.47\ ms^{-1}$$

$$(v_p)_x = (v_x)_0 + a_x t = 83.20 + (-4)\times 5 = 63.20ms^{-1}$$

$$(v_p)_y = (v_y)_0 + a_y t = 55.47 + (-8)\times 5 = 15.47\ ms^{-1}$$

$$\tan\alpha = \frac{(v_p)_y}{(v_p)_x} \Rightarrow \alpha = \tan^{-1}\frac{15.47}{63.20} = 13.75^o$$



Scanned with CamScanner

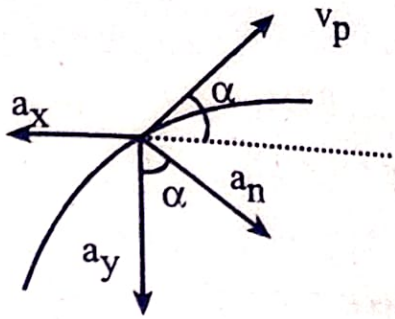


From figure, $a_n = a_y \cos\alpha - a_x \sin\alpha$

$$= 18 \cos 13.75^\circ - 4 \sin 13.75^\circ = 6.82 \text{ ms}^{-1}$$

But we know,

$$a_n = \frac{v_p^2}{\rho}$$

$$\text{or, } \rho = \frac{v_p^2}{a_n} = \frac{(v_p)_y^2 + (v_p)_x^2}{6.82} = \frac{15.47^2 + 63.20^2}{6.82} = 620.76 \text{ m}$$

Position is

$$x_p = (v_x)_0 t + \frac{1}{2} a_x t^2 = 83.20 \times 5 + \frac{1}{2}(-4) \times 5^2 = 366 \text{ m}$$

$$y_p = (v_y)_0 t + \frac{1}{2} a_y t^2 = 15.47 \times 5 + \frac{1}{2}(-8) \times 5^2 = 177.35 \text{ m}$$

**5. Motion of a particle is defined by the relation $x = \frac{t^3}{3} - 3t^2 + 8t + 15$. Determine the position of particle when velocity is 2.5 ms$^{-1}$. Also, determine the position of particle when acceleration is 3.6 ms$^{-2}$.**

**Solution:**

$$x = \frac{t^3}{3} - 3t^2 + 8t + 15 \text{ ..... (i)}$$

On differentiating both sides w.r.t. time,

$$\frac{dx}{dt} = \frac{3t^2}{3} - 6t + 8$$

$$\Rightarrow v = t^2 - 6t + 8 \text{.....(ii)}$$

On differentiating both sides w.r.t. time,



Scanned with CamScanner

$$\frac{dv}{dt} = a - 6$$

$\Rightarrow a = 2t - 6$.....(iii)

From (ii), $t^2 - 6t + 8 = 2.5$

$\Rightarrow t = 4.87, 1.13$

When $t_1 = 4.87$secs

$$x_{t1} = \frac{4.87^3}{3} - 3 \times 4.87^2 + 15 = 21.31 \text{ m}$$

When $t_1 = 1.13$ sec,

$$x_{t2} = \frac{1.13^3}{3} - 3 \times 1.13^2 + 8 \times 1.13 + 15 = 20.69\text{m}$$

Thus, the particle's velocity is $2.5\text{ms}^{-1}$ when it is at $x_1 = 21.31$ m as well as $x_2 = 20.69$ m.

**ii.** From equation (iii),

$a = 2t - 6$

or, $3.6 = 2t - 6$

or, $t = 4.8$ secs

When $t = 4.8$secs, $x = \frac{4.8^3}{3} - 3 \times 4.8^2 + 8 \times 4.8 + 15 = 21.14\text{m}$

**6. A particle starting from origin is subjected to acceleration such that $a_x = -2\text{m/s}^2$, $a_y = -5\text{m/s}^2$. The initial velocity is 60 $\text{ms}^{-1}$ directed at a slope of 30° w.r.t. horizontal. Compute the radius of curvature at the end of 3 sec. Also, determine its position at the end of 3 sec.**

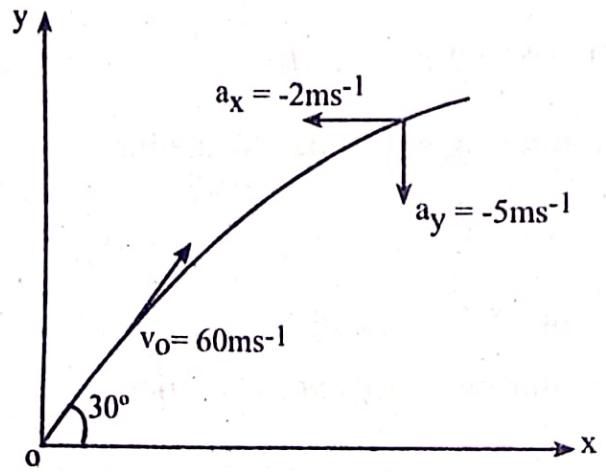




Scanned with CamScanner

**Solution:**

$a_x = -2ms^{-2}$ (uniform horizontal acceleration)

$a_y = -5ms^{-2}$ (uniform vertical acceleration)

Now, we know that

$$a_x = \frac{d^2x}{dt^2}$$

$$\text{or, } -2 = \frac{d^2x}{dt^2}$$

$$\text{or, } \frac{dx}{dt} = \int -2dt$$

$$\text{or, } x = \int(-2t + c_1)dt$$

$$\text{or, } x = -t^2 + c_1t + c_2 \text{.....(ii)}$$

Thus, we have

$v_x = -2t + c_1$ .....(i)

$x = -t^2 + c_1 t + c_2$ .....(ii)

When $t = 0$, $x = 0$, $(v_x)_0 = 60\cos30^\circ = 51.96ms^{-1}$

On using (i)

$(v_x) = -2 \times 0 + c_1$

or, $c_1 = 51.96$

So, $v_x = -2t + 51.96$

Also, $0 = -0^2 + c_10 + c_2$ (on using (ii))

$\therefore c_2 = 0$

Thus, equation (ii) becomes

$x = -t^2 + 51.96t$

Similarly,

$a_y = -5$

$$\text{or, } \frac{d^2y}{dt^2} = -5$$

On integrating both sides w.r.t. time,



Scanned with CamScanner

$$v_y = \frac{dy}{dt} = -5t + c_3 \text{ .....(iii)}$$

When $t = 0$, $v_y = 60\sin 30^\circ = 30 ms^{-1}$

$\therefore c_1 = 30$

This makes $v_y = -5t + 30$

On further integrating (iii),

$$y = \frac{-5t^2}{2} + c_3 t + c_4$$

When $t = 0$, $y = 0$

$0 = c_4$

$\therefore$ Equation (iv) becomes

$$y = \frac{-5}{2} t^2 + 30t$$

Radius of curvature is expressed as

$$\rho = \frac{(1 + y_1^2)^{3/2}}{y^2}$$

For $y_1$,

$$y_1 = \frac{dy}{dx} = \frac{dy}{dt}\frac{dt}{dx} = \frac{v_y}{v_x} = \frac{-5t + 30}{-2t + 51.96}$$

When $t = 3$sec,

$$y_1 = \frac{dy}{dx} = \frac{-5 \times 3 + 30}{-2 \times 3 + 51.96} = 0.326$$

$$y_2 = \frac{d^2y}{dx^2} = \frac{d}{dx}\left(\frac{dy}{dx}\right) = \frac{d}{dx}\left(\frac{dy/dt}{dx/dt}\right) = \frac{d}{dx}\left(\frac{v_y}{v_x}\right)$$

$$= \frac{v_x \frac{dv_y}{dx} - v_y \frac{dv_x}{dx}}{v_x^2}$$

$$= \frac{v_x \frac{dv_y}{dt}\frac{dt}{dx} - v_y \frac{dv_x}{dt}\frac{dt}{dx}}{v_x^2}$$

$$= \frac{v_x \cdot \frac{d}{dt}(-5t + 30) \cdot \frac{1}{v_x} - v_y \cdot \frac{d}{dt}(-2t + 51.96) \cdot \frac{1}{v_x}}{v_x^2}$$



Scanned with CamScanner

$$= \frac{-5-\frac{v_y}{v_x}(-2)}{v_x^2} = \frac{-5+2\frac{v_y}{v_x}}{v_x^2}$$

When t = 3 sec,

$$y_1 = \frac{v_y}{v_x} = 0.326\ ,\ v_x = 51.96 - 2 \times 3 = 45.96$$

$$y_2 = \frac{-5 + 2\times0.326}{(45.96)^2} = -2.06 \times 10^{-3}$$

$$\rho = \frac{(1 + y_1^2)^{3/2}}{|y_2|} = \frac{(1 + 0.326^2)^{3/2}}{2.06 \times 10^{-3}} = 519.25\text{m}$$

When t = 3 sec,

$$x = -t^2 + 51.96\times t = -(3)^2 + 51.96\times3 = 146.9\text{m}$$

$$y = \frac{-5 \times 3^2}{2} + 30\times3 = 67.5\text{m}$$

∴Position of the particle at the end of 3 sec (x, y) = (146.9, 67.5).

**7. A projectile is fired with an initial velocity of 244 m/s at a target B located 610 m above the level of gun A and horizontal distance of 365 m. Neglecting air resistance, determine the value of firing angle.**

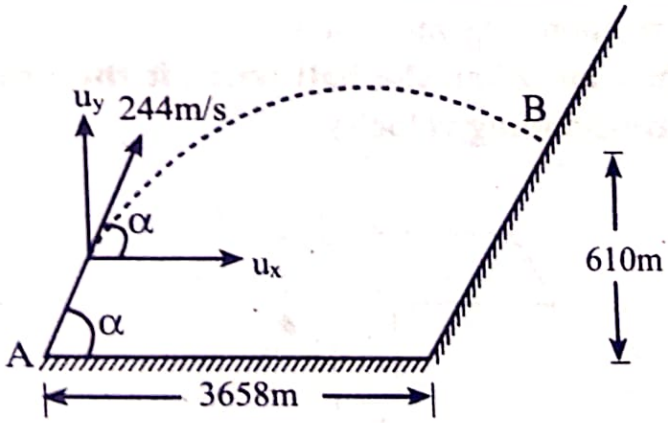


**Solution:**

$u_x = u\cos\alpha$, $u_y = u\sin\alpha$

For motion in x-direction,

$R = u_x t$

or, $3658 = 244\ t\cos\alpha$



Scanned with CamScanner

or, $t = \frac{3658}{244\cos\alpha} = \frac{14.99}{\cos\alpha} \approx \frac{15}{\cos\alpha}$

For motion in y-direction,

$h = u_y t - \frac{1}{2} g t^2$

or, $610 = (244\sin\alpha)\, t - 4.9\, t^2$

or, $610 = (244\sin\alpha) \frac{15}{\cos\alpha} - 4.9 \left(\frac{15}{\cos\alpha}\right)^2$

or, $610 = 244 \times 15 \tan\alpha - 4.9\, (15)^2 \sec^2\alpha$

or, $610 = 3660 \tan\alpha - 1102.5\, (1 + \tan^2\alpha)$

Solving for $\tan\alpha$, we get

$\tan\alpha = 0.56$ and $2.74$

or, $\alpha = 29.5^\circ$ and $70^\circ$

The value of firing angle $\alpha$ is $29.5^\circ$ or $70^\circ$.

**8. A ball is tossed with velocity of $10 ms^{-1}$ directed vertically upward from a window located 20m above the ground. Knowing that the acceleration of the ball is constant and equal to $9.81\ ms^{-2}$ downward determine:**

**i. The velocity 'v' and the elevation 'y' of the ball above the ground at any time 't'**

**ii. The highest elevation reached by the ball and the corresponding value of 't'.**

**iii. The time when the ball will hit the ground and the corresponding velocity.**

**Solution:**

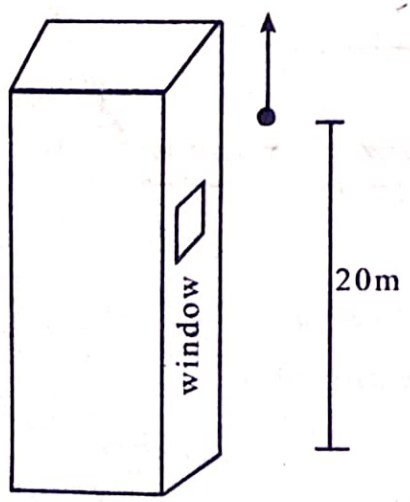




Scanned with CamScanner

i. After time t, velocity of the ball is

$v = u - gt$

$v = 10 - 9.81\ t$

If y is the height of the ball above ground at anytime t

$$y = y_o + ut - \frac{1}{2}gt^2$$

$$= 20 + 10t - \frac{9.81}{2}t^2$$

$$= 20 + 10t - 4.905\ t^2$$

ii. At the instant ball reaches to the highest elevation, its vertical velocity becomes zero.

$v = 0$

or, $10 - 9.81t = 0$

or, $t = \frac{10}{9.81} = 1.02$ sec

$\therefore y_{max} = 20 + 10 \times 1.02 - 4.905 \times 1.02^2 = 25.097$ m

iii. When the ball will hit the ground, $y = 0$

$0 = 20 + 10t - 4.905t^2$

On solving the quadratic equation,

$t_1 = 3.281$ sec , $t_2 = -1.24$ sec

Since $t_2 = -1.24$ sec is not appropriate value, it is neglected and $t_1 = 3.281$ sec is chosen.

Velocity with which the ball hits the ground is

$v = 10 - 9.81\ (3.281) = -22.19\ ms^{-1}$

**9. The motion of a 100 gm block B in a horizontal plane is defined by radius, $r = 2\ (1 + \cos 2\pi t)$ and $\theta = 2\pi t$ where 'r' is expressed in meters and 't' in seconds. Determine the radial and transverse components of the force exerted on the block B at 0.8 sec.**

**Solution:**

$r = 2(1 + \cos 2\pi t) = 2 + 2\cos 2\pi t$

$\dot{r} = 2(-\sin 2\pi t) \times 2\pi = -4\pi \sin 2\pi t$



Scanned with CamScanner

$\ddot{r} = -4\pi \times 2\pi \cos 2\pi t = -8\pi^2 \cos(2\pi t)$

$\dot{\theta} = 2\pi, \ddot{\theta} = 0$

Radial component of force,

$F_r = m\,|\vec{a}_r|\,|\hat{e}_r|$

$= 1\,(\ddot{r} - r\dot{\theta}^2)1 = 1\{-8\pi^2\cos(2\pi t) - 2(1+\cos 2\pi t)\,(2\pi)^2\}$

When t = 0.8 sec, $F_r = -50.798$ N.

Transverse component of force

$F_\theta = m\,|\vec{a}_\theta|\,|\hat{e}_\theta|$

$= m\,(r\ddot{\theta} + 2\dot{r}\,\dot{\theta})1 = 1\{(2+2\cos 2\pi t)\times 0 + 2\times(-4\pi \sin 2\pi t)\times 2\pi\}$

When t = 0.8 sec, $F_\theta = 150.185$ N

$\therefore \vec{F} = -50.8\hat{e}_r + 150.185\hat{e}_\theta$

**10. The acceleration of a particle is directly proportional to the time. At time t = 0, the velocity of the particle is v = 16 m/s. Knowing that velocity v = 15 m/s, position x = 20m and time t = 1 sec, determine the velocity, the position and total distance travelled when time t =7 sec.**

**Solution:**

Given, $a \propto t$

or, $a = kt$ ; where k is a constant.

or, $\frac{dv}{dt} = kt$

or, $dv = ktdt$

Integrating both sides, we get,

$v = k\,\frac{t^2}{2} + c_1$ .....(i)

Applying condition, v = 16 m/s at t = 0 in (i), we get

$16 = 0 + c_1 \Rightarrow c_1 = 16$

$\therefore$ (i) becomes



Scanned with CamScanner

$$v = \frac{kt^2}{2} + 16 \text{ .....(ii)}$$

Similarly, when t = 1 sec, v = 15 m/s

∴ (ii) becomes

$$15 = \frac{k \times 1^2}{2} + 16 \Rightarrow k = -2 \text{ m/s}^2$$

∴ (ii) becomes

$$v = -t^2 + 16 = 16 - t^2 \text{ .....(iii)}$$

Also, $v = \frac{dx}{dt} = 16 - t^2$

or, $dx = (16 - t^2)\, dt$

Integrating both sides, we get

$$x = 16t - \frac{t^3}{3} + c_2 \text{ ..... (iv)}$$

Applying condition that x = 20 m at t = 1sec in (iv), we get

$$c_2 = \frac{13}{3}$$

∴Equation (iv) becomes

$$x = 16t - \frac{t^3}{3} + \frac{13}{3} \text{ .....(v)}$$

Velocity and position when t = 7 sec

$$v = 16 - t^2 = 16 - 7^2 = -33 \text{ m/s}$$

And, $x = 16 \times 7 - \frac{7^3}{3} + \frac{13}{3} = 2 \text{ m}$

Now applying condition v = 0 in (iii) we get

$t = \pm 4\text{sec} = 4\text{sec}$ (+ve taken)

Position when t = 0sec,

i.e., $x_0 = \frac{13}{3}$ [from (v)]

Position when t = 4 sec is

$$x_4 = 16 \times 4 - \frac{4^3}{3} + \frac{13}{3} = 47 \text{ m}$$



Scanned with CamScanner

Position when t = 7 sec is

$x_7 = 2m$

Total distance travelled when t = 7sec is

$S = | x_4 - x_0 | + | x_7 - x_4 |$

$= |47 - \frac{13}{3}| + | 2 - 47 | = 42.67 + 45 = 87.67m$

**11. The acceleration of a particle is defined as the relation $a = -0.0125v^2$, where a is the acceleration in $m/s^2$ and v is the velocity in m/s. If the particle is given an initial velocity $v_0$, find the distance it will travel**

**(a) before its velocity drops to half the initial value**

**(b) before it comes to rest**

**Solution:**

$a = -0.0125\, v^2$

or, $v\frac{dv}{dx} = -0.0125\, v^2$

or, $\frac{dv}{v} = -0.0125\, dx$

Integrating both sides,

$ln\, v + C_1 = -0.0125\, x$ .....(i)

When x = 0, v = $v_0$ m/s, from (i), we obtain

$c_1 = -ln\, v_0$

∴ Equation (i) becomes

$ln\, v - ln\, v_0 = -0.0125\, x$

or, $-0.0125x = ln\,(\frac{v}{v_0})$ .....(ii)

(a) When $v = \frac{v_0}{2}$, then (ii) becomes

$-0.0125x = ln\, \frac{v_0}{2v_0}$

$\Rightarrow x = 55.5$ m Ans

(b) When v = 0 (at rest), then (ii) becomes



Scanned with CamScanner

$$-0.0125x = \ln\left(\frac{0}{V_0}\right)$$

$$\Rightarrow x = \text{infinite}$$

**12. The acceleration of a particle is defined by the relation a = -2 m/s². Initially, if velocity $v_0$ = 8m/s and position $x_0$ = 0m, determine the velocity, position and the total distance travelled at the instant of 6 sec.**

**Solution:**

$$a = \frac{dv}{dt} = -2$$

or, $dv = -2dt$

Integrating both sides,

$v = -2t + c_1$ ..... (i)

Applying t = 0 (initially) ,v = $v_0$ = 8 m/s in (i), we get

$c_1 = 8$

∴ Equation (i) becomes

$v = -2t + 8$ .....(ii)

Also, $v = \frac{dx}{dt} = -2t + 8$

$\Rightarrow dx = (-2t + 8)\,dt$

Integrating both sides

$$x = -\frac{2t^2}{2} + 8t + c_2$$

or, $x = -t^2 + 8t + c_2$ .....(iii)

Applying t = 0, x = $x_0$ = 0 m in (iii), we get,

$c_2 = 0$

∴Equation (iii) becomes

$x = -t^2 + 8t$ .....(iv)

∴At the instant of 6sec,from (ii), velocity is

$v = -2 \times 6 + 8 = -4$ m/s

And, from (iv), position, $x_6 = -6^2 + 8 \times 6 = 12$m

To find total distance travelled



Scanned with CamScanner

When v = 0 m/s, from (ii),

t = 4sec

Position at t = 4 sec is calculated from (iv),

$x_4 = -(4)^2 + 8 \times 4 = 16m$

Total distance travelled at t = 6 sec is

$s = |x_4 - x_0| + |x_6 - x_4| = |6-0| + |12 - 16| = 16 + 4 = 20$ m

**13. The acceleration of a particle is defined by the relation $a = -k\sqrt{v}$ ; where k is a constant. Knowing that x = 0 and v = 81 m/s at t = 0 and that v = 36 m/s when x = 18 m. Determine**

**(i) the velocity of the particle at x = 20m**

**(ii) the time required for the particle to come to rest.**

**Solution:**

$a = -k\sqrt{v}$ .....(i)

But, $a = v\dfrac{dv}{dx}$

or, $-\dfrac{\sqrt{v}}{k}dv = dx$

Integrating both sides, we get,

$-\dfrac{1}{k}\dfrac{v^{3/2}}{3/2} = x + c_1$

or, $\dfrac{-2}{3k}v^{3/2} = x + c_1$ ...(ii)

Applying x = 0 and v = 81 m/s in (ii), we get

$\dfrac{-2}{3k} \times (81)^{3/2} = 0 + c_1$

$\Rightarrow c_1 = \left(\dfrac{-486}{k}\right)$

∴ (ii) becomes,

$\dfrac{-2}{3k}v^{3/2} = x + \left(\dfrac{-486}{k}\right)$

Applying v = 36 m/s when x = 18 m ,we get,



Scanned with CamScanner

$$\frac{-2}{3k}(36)^{3/2} = 18 - \frac{486}{k}$$

$$\text{or, } \frac{-144}{k} + \frac{486}{k} = 18$$

$$\Rightarrow k = 19$$

$\therefore$ Above relation becomes,

$$\frac{-2}{57} v^{3/2} = x - \frac{486}{19} \quad \text{.....(iii)}$$

(i) **At x = 20 m, from (iii),**

$$\frac{-2}{57} v^{3/2} = 20 - \frac{486}{19}$$

$$\text{or, } -v^{3/2} = \frac{-106}{19} \times \frac{57}{2}$$

$$\text{or, } v^{3/2} = 159$$

$$\text{or, } v = (159)^{2/3}$$

or, v = 29.35 m/s Ans

(ii) **Again, from (i),**

$$a = \frac{dv}{dt} = -k\sqrt{v}$$

$$\text{or, } v^{-1/2}dv = -19dt$$

Integrating both sides, we get

$$2v^{1/2} = -19t + c_2$$

Applying the condition that v = 81 m/s at t =0, we get

$$c_2 = 18$$

Then, equation becomes,

$$2\sqrt{v} = -19t + 18$$

Now, when particle comes to rest i.e., at v = 0 m/s, then, from above relation,

$$0 = -19t + 18$$

$$\Rightarrow t = \frac{18}{19} = 0.947 \text{ sec}$$



Scanned with CamScanner

**14.** **The acceleration of a particle is defined by relation a = 0.6 (1–kv), where, k is a constant. Knowing that at t = 0, the particle starts from rest at x = 6 m and that v = 6 m/s when t = 20 s.**

**Determine:**

**(a) the constant k**

**(b) the position of the particle when v = 7.5 m/s**

**(c) the maximum velocity of the particle**

**Solution:**

Given, $a = 0.6\,(1 - kv)$ .....(a)

But, $a = \dfrac{dv}{dt} = 0.6\,(1 - kv)$

or, $\dfrac{dv}{0.6(1 - kv)} = dt$

Integrating both sides, we get,

$\dfrac{-1}{0.6k} ln(1 - kv) = t + C_1$ .....(i)

Applying the condition that at t = 0, v = 0,

$\dfrac{-1}{0.6k} ln(1 - 0) = 0 + C_1$

$\Rightarrow C_1 = 0$

Now equation (i) becomes,

$\dfrac{-1}{0.6k} ln(1 - kv) = t$ .....(ii)

(a) Applying v = 6 m/s when t = 20 s in (i),

$\dfrac{-1}{0.6k} ln(1 - 6k) = 20$

Solving for k, we get

k = 0.1328

(b) $a = v\dfrac{dv}{dx} = 0.6\,(1 - kv)$

or, $\dfrac{v\,dv}{0.6\,(1 - kv)} = dx$



Scanned with CamScanner

Integrating both sides, we get

$$\int \frac{v\,dv}{0.6\,(1 - kv)} = \int dx$$

By partial fraction,

$$\frac{v}{1 - kv} = \frac{1}{k}\left(-1 + \frac{1}{1 - kv}\right)$$

So, $\int \frac{1}{0.6k}\left(-1 + \frac{1}{1 - kv}\right) dv = \int dx$

or, $\frac{1}{0.6k}\left[-v - \frac{1}{k} ln\,(1 - kv)\right] = x + c_2$ .....(iii)

Applying condition that x = 6 m when v = 0 m/s, we get, $c_2 = -6$

Equation (iii) is reduced to

$$x = 6 - \frac{1}{0.6k}\left[v + \frac{1}{k} ln(1 - kv)\right]$$

Again, using v = 7.5 m/s and k = 0.1328s/m, we get

x = 434 m.

(c) To find the maximum velocity, we take $\frac{dv}{dt} = 0$ i.e., a = 0.

From equation (a),

$0 = 0.6\,(1 - kv)$

or, $v = \frac{1}{k}$

$$\therefore v_{max} = \frac{1}{0.1328} = 7.53 \text{ m/s}$$

**15. The motion of a particle is defined by the equations: $x = \frac{t^3}{2} - 2t$ and $y = \frac{t^2}{2} - 2t$, where x and y are expressed in meter and t in sec. Determine the velocity and acceleration when t = 1 sec.**

**Solution:**

$$x = \frac{t^3}{2} - 2t^2$$



Scanned with CamScanner

$$\Rightarrow v_x = \frac{3}{2}t^2 - 4t \quad \text{..... (i)}$$

$$y = \frac{t^2}{2} - 2t$$

$$\Rightarrow v_y = t - 2 \quad \text{..... (ii)}$$

At t = 1 sec,

$$v_x = \frac{3}{2} \times 1 - 4 \times 1 = \frac{-5}{2} \text{ m/s}$$

$$\therefore v = \sqrt{v_x^2 + v_y^2} = \sqrt{(-5/2)^2 + (-1)^2} = 2.7 \text{ m/s}$$

$$\theta = \tan^{-1}\left(\frac{v_y}{v_x}\right) = \tan^{-1}\left(\frac{-1}{-5/2}\right) = 180^\circ + 21.8^\circ = 201.8^\circ$$

Differentiating (i) & (ii) w.r.t. t, we get

$a_x = 3t - 4$ and $a_y = 1$

At t = 1sec, $a_x = -1$, $a_y = 1$

$$\therefore a = \sqrt{a_x^2 + a_y^2} = \sqrt{(-1)^2 + 1^2} = 1.41 \text{ m/s}^2$$

$$\alpha = \tan^{-1}\left(\frac{a_y}{a_x}\right) = \tan^{-1}\left(\frac{1}{-1}\right) = 180^\circ - 45^\circ = 135^\circ$$

**16. The particle, having the position vector of r = 5 cos (2θ) m, is travelled in a curvilinear path as shown in figure below where θ = 3t² (rad/s). Find the velocity and acceleration of the motion of the particle at θ= 30°.**

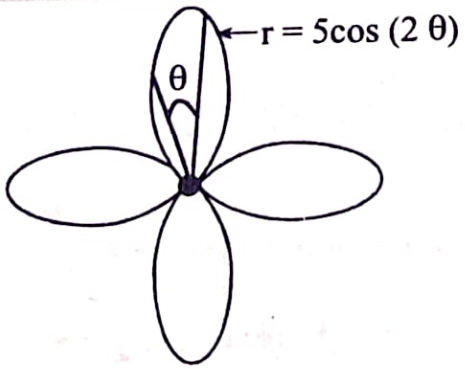


**Solution:**

$$r = 5\cos(2\theta) = 5\cos(2 \times 3t^2) = 5\cos(6t^2)$$

$$\therefore \dot{r} = \frac{dr}{dt} = -60\,t\sin(6t^2)$$



Scanned with CamScanner

$$\ddot{r} = \frac{d^2r}{dt^2} = -60 \sin(6t^2) - 60\, t \cos(6t^2) \times 12t$$

$$= -60 \sin(6t^2) - 720\, t^2 \cos(6t^2)$$

Again,

$\theta = 3t^2$, $\dot{\theta} = 6t$, and $\ddot{\theta} = 6$

Now,

$$\theta = 3t^2 \Rightarrow t = \sqrt{\frac{\theta}{3}}$$

$$\theta = 30^\circ = \frac{\pi^c}{6} \Rightarrow t = \sqrt{\frac{\pi^c}{18}} = 0.417 \text{ sec}$$

Substituting the value of t, we get

$r = 5 \cos(6t^2) = 2.516$ m (angle is in radian)

$\therefore \dot{r} = -21.62$ m /s

$\ddot{r} = -114.86$ m/s$^2$

Similarly,

$\theta = 0.53$ rad

$\dot{\theta} = 2.502$ rad /sec

$\ddot{\theta} = 6$ rad /sec$^2$

$v_r = \dot{r} = -21.62$ m/s

$v_\theta = r\dot{\theta} = 2.516 \times 2.502 = 6.295$ m/s

$a_r = \ddot{r} - \dot{r}\,\theta^2 = -130.61$ m/s$^2$

$a_\theta = r\ddot{\theta} + 2\dot{r}\,\dot{\theta} = -93.09$ m/s$^2$

Total velocity and acceleration at $\theta = 30^\circ$ is given by

$v = \sqrt{v_r^2 + v_\theta^2} = 22.518$ m/s

And, $a = \sqrt{a_r^2 + a_\theta^2} = 160.39$ m/s$^2$



Scanned with CamScanner

**17. The motion of a particle is defined by the position vector $(\vec{r}) = 3t^2\hat{i} + 4t^3\hat{j} + 5t^4\hat{k}$ where r is in meter and t is in second. Find the normal and tangential component of acceleration and the principal radius of curvature at the instant when t = 4 secs.**

**Solution:**

$$\vec{r} = 3t^2\hat{i} + 4t^3\hat{j} + 5t^4\hat{k}$$

$$\vec{v} = \frac{d\vec{r}}{dt} = 6t\,\hat{i} + 12t^2\hat{j} + 20\,t^3\,\hat{k}$$

$$\vec{a} = \frac{d\vec{v}}{dt} = \frac{d^2\vec{r}}{dt^2} = 6\hat{i} + 24t\hat{j} + 60\,t^2\hat{k}$$

$$v = |\vec{v}| = (36t^2 + 144\,t^4 + 400\,t^6)^{1/2}$$

$$a = |\vec{a}| = \sqrt{(6)^2 + (24t)^2 + (60t^2)^2} = (36 + 576t^2 + 3600\,t^4))^{1/2}$$

At time t = 4 sec,

$$v = (36 \times 4^2 + 144 \times 4^4 + 400 \times 4^6)^{1/2} = 1294.54 \text{ m/s}$$

$$a = 964.81 \text{ m/s}^2$$

Tangential component of acceleration is ,

$$a_t = \frac{dv}{dt} = \frac{d}{dt}(36\,t^2 + 144\,t^4 + 400\,t^6)^{1/2}$$

$$= \frac{(72t + 576t^3 + 2400t^5)}{2(36t^2 + 144t^4 + 400t^6)^{1/2}}$$

At t = 4 sec,

$$a_t = 963.56 \text{ m/s}^2$$

Normal component of acceleration is

$$a_n = \sqrt{a^2 - a_t^2} = \sqrt{(964.81)^2 - 963.56^2)} = 49.1 \text{ m/s}^2$$

Principal radius of curvature is,

$$\rho = \frac{v^2}{a_n} = \frac{(1294.54)^2}{49.1} = 34131.03 \text{ m}$$

**18. The acceleration of a particle is defined by the relation a = 12x - 28 where a is m/s² and x in m. Knowing that v = 8ms⁻¹ when x = 0; determine**

**a. The value of x when v is maximum**

**b. The velocity when the particle has travelled a total distance of 3m**



Scanned with CamScanner

**Solution:**

a. $a = 12x - 28$

or, $v\dfrac{dv}{dx} = 12x - 28$

or, $v\,dv = (12x - 28)\,dx$

or, $\dfrac{v^2}{2} = 6x^2 - 28x + c$

When $x = 0$, $v = 8\ ms^{-1}$

or, $\dfrac{8^2}{2} = c \Rightarrow c = 32$

$\therefore \dfrac{v^2}{2} = 6x^2 - 28x + 32 \Rightarrow v = (12x^2 - 56x + 64)^{1/2}$

For x, when v is maximum

$\dfrac{dv}{dx} = 0$

or, $\dfrac{d}{dx}(12x^2 - 56x + 64)^{1/2} = 0$

or, $\dfrac{1\,(24x - 56)}{2(12x^2 - 56x + 64)^{1/2}} = 0$

or, $x = \dfrac{56}{24} = 2.33m$, when velocity is maximum

b. When $x = 3m$

$\dfrac{v^2}{2} = 6 \times 3^2 - 28 \times 3 + 32$

or, $v^2 = 2 \times 2$

$\therefore v = \pm 2ms^{-1}$

**19. A projectile is fired from the edge of a 250m cliff with an initial velocity of 360 m/s at an angle of 45° with the horizontal. Neglecting air resistance, find**

**(i) the greatest elevation above the ground reached by the projectile and**

**(ii) the horizontal distance from the gun to the point where the projectile strikes the ground.**



Scanned with CamScanner

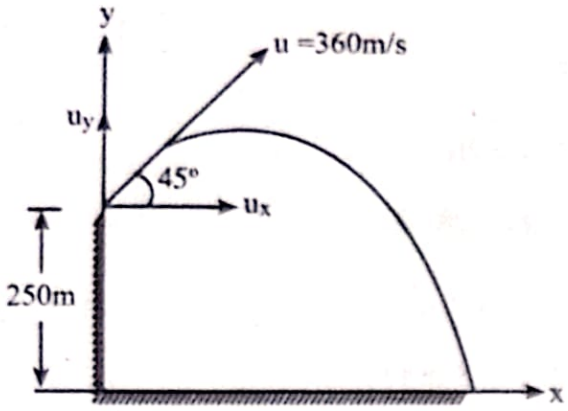


**Solution:**

$u_x = u\cos\alpha = 254.558$ m/s, $u_y = u\sin\alpha = 254.558$ m/s

At maximum height, velocity in y -direction is zero

Applying equation of motion at maximum height,

$v_y^2 = u_y^2 - 2gh$

or, $0 = (254.558)^2 - 2\times9.81\times h$

$\therefore$ h = 3302.74m is the maximum height above cliff.

Hence, the greatest elevation above the ground reached by the projectile is,

(250 + h) m = (250 + 3302.74) m = 3552.74 m

Now, time taken to travel 250m height is,

$$h = u_y t - \frac{1}{2}gt^2$$

or, $-250 = 254.558t - 4.905t^2$ which is quadratic in t.

Solving, we get

t = 52.86 sec

Now, horizontal distance from origin to the point where the projectile strikes the ground is

$R = u_x t = 254.558 \times 52.86 = 13455.93$ m

**20. A particle is projected at an angle of 30° to horizontal axis with an initial velocity of 61 m/s hit the target located at 'h' meter below the horizontal axis and having the inclined slope of $\frac{3}{4}$ downward from the axis of the target. Find the sloping distance covered by the projectile and the maximum height achieved by particle from the target.**



Scanned with CamScanner

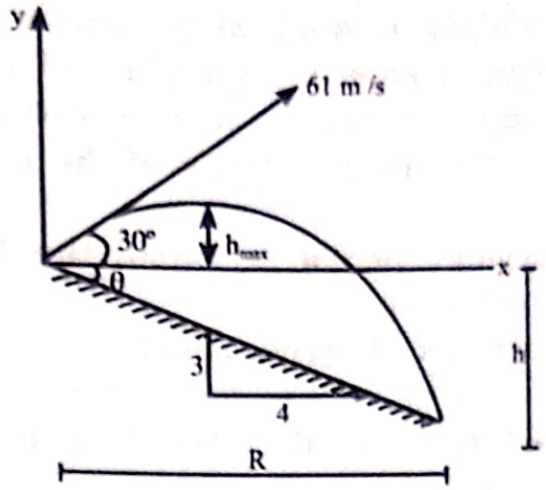


**Solution:**

Considering motion in y-direction,

$-h = u_y t - \frac{1}{2} g t^2$

or, $h = 4.9t^2 - 30.5t$

Range, $R = u_x t = u\cos\alpha\, t = 61\cos 30°\, t$

Slope (m) = $\tan\theta = \frac{h}{R}$

or, $\frac{3}{4} = \frac{4.9t^2 - 30.5t}{61\cos 30° t}$

or, $39.62t = 4.9t^2 - 30.5t$ which is quadratic in t .

Solving, we get,

t = 0 or 14.29 sec

Hence,

$h = 4.9t^2 - 30.5t = 566.39$ m

And, $R = 61\cos 30° \times 14.29 = 754.9$m

Sloping distance = $\sqrt{h^2+R^2} = 943.75 \cong 944$ m

Maximum height achieved by particle from the target

$= h_{max} + h$

i.e., $H = \frac{u^2 \sin^2 30°}{2g} + h$

$= \frac{61^2 \sin^2 30}{2 \times 9.81} + 566.39$

$= 613.8$ m



Scanned with CamScanner

**21. A bullet is fired upward at an angle of 30° to the horizontal from a point P on a hill and it strike a target which is 80 m lower than the level of projection as shown in fig below. The initial velocity of the bullet is 100 m/s. Calculate**

**(a) the maximum height to which the bullet will rise above the horizontal**

**(b) the actual velocity with which it'll strike the target and**

**(c) the total time required for the flight of bullet. Neglect the resistance due to air .**

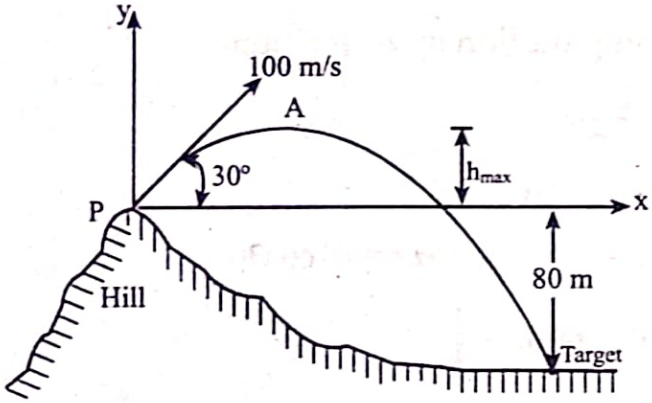


**Solution:**

$u_x = u\cos 30° = 86.6$ m/s ,

$u_y = u\sin 30° = 50$m/s

a. $$h_{max} = \frac{u^2\sin^2 30°}{2g}$$

$$= \frac{(100)^2 \sin^2 30°}{2\times 9.81}$$

$= 127.42$m

b. Let $v_1$ = vertical component of velocity at maximum height A.

So, $v_1 = 0$ m/s

$v_2$ = Vertical component of velocity striking the target

H = Total vertical distance between point A and target

$= 127.42 + 80 = 207.42$ m

Then, $v_2^2 - v_1^2 = 2gH$

or, $v_2^2 - 0 = 2\times 9.81 \times 207.42$



Scanned with CamScanner

or, $v_2 = 63.79$ m/s

Since the air resistance is neglected, the horizontal component of velocity from the point of projection & during its flight remains constant.

Horizontal component of velocity = 86.6 m/s

Hence, the actual velocity with which the bullet will strike the target $= \sqrt{86.6^2 + 63.79^2} = 107.55$ m/s

$$\theta = \tan^{-1}\frac{63.79}{86.6} = 36.37°$$

c. For motion in y-direction,

$$y = u_y t - \frac{1}{2} gt^2$$

$$\text{or, } -80 = 50\,t - \frac{1}{2} \times 9.81\,t^2$$

Solving for t, we get

t = 11.60 sec or – 1.41 sec

Neglecting -1.41 sec as time cannot be negative,

∴ Total time = 11.6 sec

**22. A projectile is projected as in figure with velocity 30.5 m/s. Determine the total time and range covered by it.**

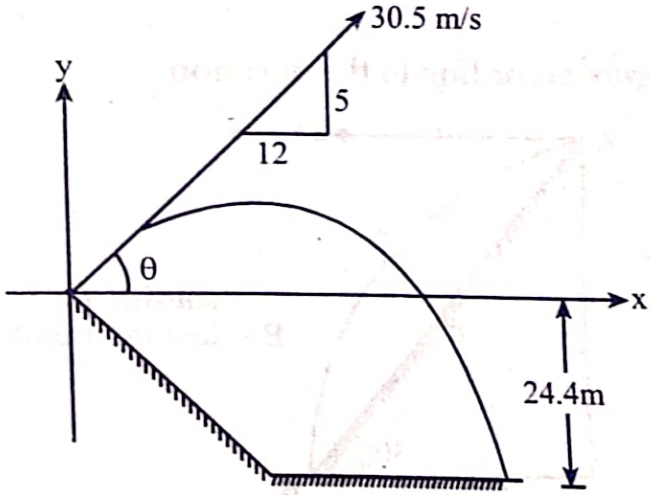


**Solution:**

$$\tan\theta = \frac{5}{12} = 0.417,$$



Scanned with CamScanner

$$\sin\theta = \frac{5}{13} = 0.385,$$

$$\cos\theta = \frac{12}{13} = 0.923$$

$u_x = u\cos\theta = 28.15$ m/s,

$u_y = u\sin\theta = 11.73$ m/s

For motion in y-direction,

$$y = u_y t - \frac{1}{2} \times 9.81 \times t^2$$

or, $-24.4 = 11.73\,t - \frac{1}{2} * 9.81 * t^2$

or, $4.905\,t^2 - 11.73\,t - 24.4 = 0$

Solving for t, we get,

t = 3.73s which is the total time.

Range (R) = $u_x t$

$= 28.15 \times 3.73 = 104.9$ m

**23. A sky jumper starts with a horizontal take-off velocity of 25 m/s and land on a straight landing hill inclined at 30°. Determine:**

**a. The time between take - off and landing**

**b. The maximum vertical distance between jumper and landing hill.**

**Solution:**

The figure according to the question is,

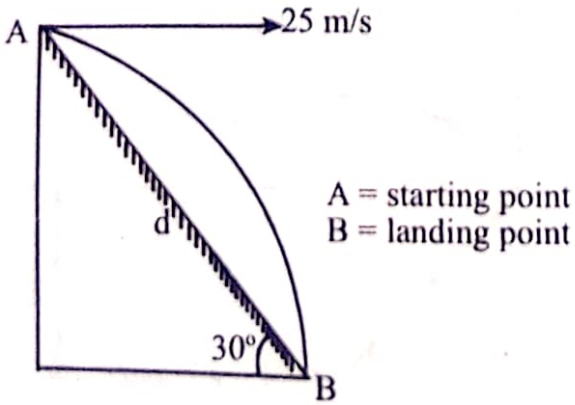


Since the sky jumper starts with horizontal take-off velocity of 25 m/s, we have

$u = u_x = 25$ m/s, $u_y = 0$



Scanned with CamScanner

For motion in x- direction,

$x = u_x t = 25\ t$ .....(i)

For motion in y-direction,

$y = u_y t - \frac{1}{2} gt^2 = 0 - 4.905\ t^2$

or, $y = -4.905\ t^2$ .....(ii)

At landing point B,

$x = d \cos 30^\circ = 0.866d$

And, $y = d \sin 30^\circ = -0.5d$

Where, d is the length of hill.

Then, equation (i) becomes

$0.866d = 25\ t$

or, $t = \frac{0.866}{25} d$

And, hence equation (ii) becomes

$-0.5d = -4.905\ t^2$

or, $-0.5d = -4.905 \left(\frac{0.866}{25} d\right)^2$

or, $5.88 \times 10^{-3} d^2 - 0.5d = 0$

Solving for d, we get

$d = 84.95$ m

Time between take- off and landing is

$t = \frac{0.866}{25} d = 2.94$ sec

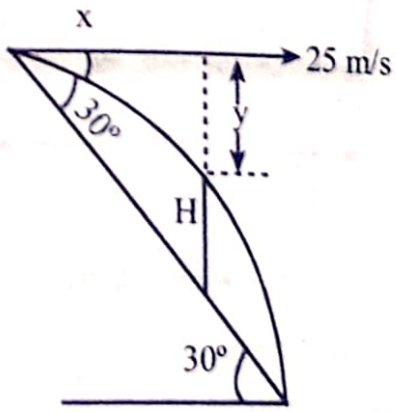


From figure, $\tan 30^\circ = \frac{H+y}{x}$



Scanned with CamScanner

or, $H = x \tan 30^\circ - y$

or, $H = 25\, t \tan 30^\circ - 4.905\, t^2$ [From (i) & (ii)]

where H is maximum vertical distance between jumper and landing hill.

For H to be maximum, $\frac{dH}{dt} = 0$

i.e., $25 \tan 30^\circ - 2 \times 4.905\, t = 0$

or, $t = 1.471$ sec

$\therefore$ At $t = 1.471$ sec,

$H = H_{max}$

$= 25 \times 1.471 \times \tan 30^\circ - 4.905 \times (1.471)^2 = 10.618$ m

**24. A gun is placed on a cliff of 200m above a plain. The muzzle velocity of the gun is 1000 m/s. At what angle θ to the horizontal axis must the gun point in order to hit a target, which is located at a horizontal distance of 30 km from the vertical axis of the gun on a plane? Neglect the air friction.**

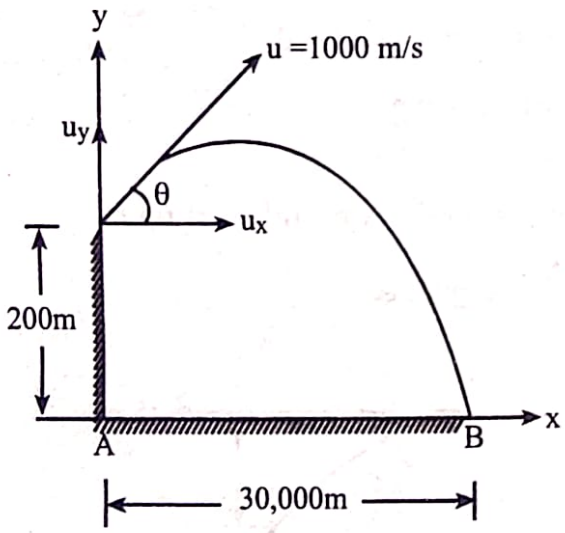


**Solution:**

$u = 1000$ m/s, $x = 30$ km $= 30{,}000$ m, $y = 200$ m

For motion in x- direction,

$x = u_x t = u\cos\theta t$ .....(i)

For motion in y –direction,



Scanned with CamScanner

$$y = u_y t - \frac{1}{2} g t^2$$

$$\text{or, } -200 = u\sin\theta t - \frac{1}{2} g t^2$$

$$\text{or, } -200 = 1000\sin\theta \times t - \frac{1}{2} g \times t^2$$

$$\text{or, } -200 = 1000 \sin\theta \frac{x}{u\cos\theta} - \frac{1}{2} g \left(\frac{x}{u\cos\theta}\right)^2 \quad \text{[from ....(i)]}$$

$$\text{or, } -200 = 1000\sin\theta \frac{30000}{1000\cos\theta} - \frac{1}{2} g \left(\frac{30000}{1000\cos\theta}\right)$$

$$\text{or, } -200 = 30000 \tan\theta - 4414.5 \sec^2\theta$$

$$\text{or, } -200 = 30000 \tan\theta - 4414.5 (1+\tan^2\theta)$$

$$\text{or, } 4414.5 \tan^2\theta - 30000 \tan\theta - 200 + 4414.5 = 0$$

$$\text{or, } \tan^2\theta - 6.8 \tan\theta + 0.955 = 0$$

Solving for tan θ, we get

$$\tan\theta = 6.66 \text{ or } 0.14$$

$$\therefore \theta = 81.46^\circ \text{ or } 7.97^\circ$$

**25. A nozzle, as in figure below, at A discharges water with an initial velocity 11 m/s at an α with the horizontal. Determine**

**a. Distance d to the farthest point B on the roof that the water can reach**

**b. The corresponding angle α. Check that the stream will clear the edge of the roof.**

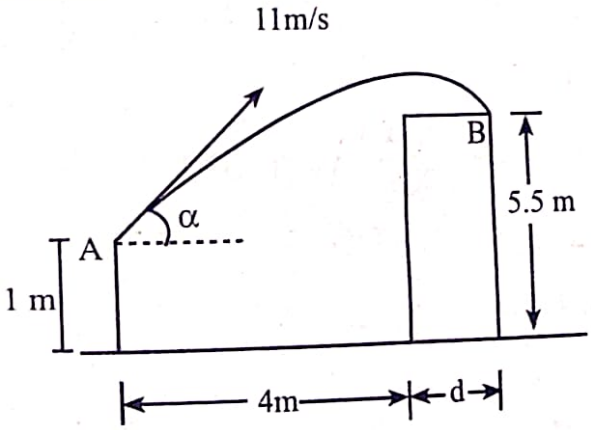




Scanned with CamScanner

**Solution:**

$u = 11$ m/s

$u_x = 11\cos\alpha$, $u_y = 11\sin\alpha$

$x = u + d$ and, $y_o = 1$ m, $y = 5.5$ m

For motion in x-direction,

$x = x_o + u_x t = 0 + 11\cos\alpha t$ ..... (i)

For motion in y-direction,

$y = y_o + u_y t - \frac{1}{2} g t^2$ .....(ii)

or, $5.5 = 1 + 11\sin\alpha t - \frac{1}{2} \times 9.81 \times t^2$

or, $4.5 = 11\sin\alpha \times \frac{x}{11\cos\alpha} - \frac{4.905 \times x^2}{(11\cos\alpha)^2}$ [from (i)]

or, $4.5 = x\tan\alpha - \frac{4.905x^2}{121\cos^2\alpha}$

or, $4.5 = x\tan\alpha - \frac{4.905x^2}{121} x^2(1 + \tan^2\alpha)$

Let $x\tan\alpha = u$. Then,

$4.5 = u - \frac{4.905}{121}(u^2 + x^2)$

or, $x^2 = 121\left[\frac{u-4.5}{4.905}\right] - u^2$

For x to be maximum, $\frac{d}{du}(x^2) = 0$

or, $\frac{121}{4.905} - 2u = 0$

or, $u = 12.33$

$\therefore x^2 = 121\left(\frac{12.33-4.5}{4.905}\right) - (12.33)^2$

or, $x^2 = 41.413$

or, $x = 6.41$ m

Now,

$x\tan\alpha = u$



Scanned with CamScanner

or, $6.41 \tan\alpha = 12.33$

or, $\alpha = 62.5^\circ$

Also, $x = d + u$

or, $d = x - 4 = (6.41 - 4) = 2.41$ m

At $x = 4$m,

$$t = \frac{4}{11\cos(62.5^\circ)} = 0.7875 \text{ sec [from equation (i) ]}$$

From equation (ii),

$y = 1 + 11 \sin(62.5) \times 0.7875 - 4.905 \times (0.7875)^2 = 5.64$ m

Since, $y > 5.5$ m, so, the stream clears the edge of the roof .

**26. A nozzle discharges a stream of water in direction as shown in figure below with an initial velocity of 25m/sec. Determine the radius of curvature of the steam (i) as it leaves the nozzle (ii) at the maximum height of the stream.**

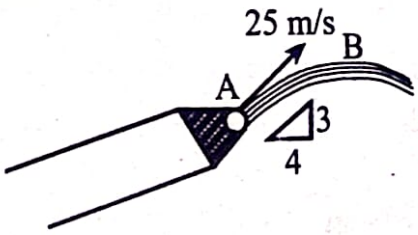


**Solution:**

We have,

$$\rho = \frac{\left[1 + \left(\frac{dy}{dx}\right)^2\right]^{3/2}}{\frac{d^2y}{dx^2}}$$

Here, $\frac{dy}{dx} = \frac{\frac{dy}{dt}}{\frac{dx}{dt}}$

$$u_x = u\cos\theta = 25 \times \frac{4}{5} = 20\text{m/sec.}$$

$$u_y = u\sin\theta = 25 \times \frac{3}{5} = 15\text{m/sec.}$$

Considering y-direction $y = u_y t - \frac{1}{2}gt^2$



Scanned with CamScanner

$$y = (u\sin\theta)t - \frac{1}{2}gt^2$$

$$\frac{dy}{dt} = u\sin\theta - \frac{1}{2} \times 2gt$$

$$\text{or, } \frac{dy}{dt} = u\sin\theta - gt \text{ ..... (i)}$$

Again, $x = u_x t$

$$u_x = \frac{dx}{dt} = 20\text{m/sec} \text{..... (ii)}$$

Equations (i) & (ii) suggest vertical velocity has influence of gravity while horizontal doesn't have.

Combining equations (i) & (ii),

$$\frac{dy}{dx} = \frac{\frac{dy}{dt}}{\frac{dx}{dt}} = \frac{u\sin\theta - gt}{20} = \frac{15 - gt}{20}$$

$$\therefore \frac{d^2y}{dx^2} = \frac{d\left(\frac{dy}{dx}\right)}{dx}$$

$$= \frac{d}{dx}\left(\frac{15 - gt}{20}\right)$$

$$= \frac{1}{20}\left\{0 - g\frac{dt}{dx}\right\} = \frac{1}{20}\frac{(-9.81)}{20} = -0.0245$$

(i) At t = 0sec. i.e. at it levels the nozzle

$$\frac{dy}{dx} = \frac{15 - 9 \times 0}{20} = \frac{3}{4}$$

$$\frac{d^2y}{dx^2} = -0.0245$$

$$\therefore \rho = \frac{\left[1 + \left(\frac{dy}{dx}\right)^2\right]^{3/2}}{\frac{d^2y}{dx^2}} = \frac{\left[1 + \left(\frac{3}{4}\right)^2\right]^{3/2}}{-0.245}$$

$$= -79.71 \text{ m}$$

Taking positive value, $\rho = 79.71$ m



Scanned with CamScanner

(ii) At the maximum height of the stream,

$$\frac{dy}{dx} = 0$$

$$\therefore \rho = \frac{[1 + 0^2]^{3/2}}{-0.0245} = -40.82\text{m}$$

Taking positive value, $\rho = 40.82$ m

**17. The acceleration of the particle is defined by the relation. $a = 9 - 3t^2$. The particle starts at $t = 0$ with $v = 0$ and $x = 15$ m determine:**

**i. the time when velocity is agin zero**

**ii. the position and velocity with $t = 4$ secs**

**iii. the total distance travelled by the particle from $t = 0$ to $t = 4$secs** **[2019 Fall, POU]**

**Solution:**

Given, $a = 9 - 3t^2$

At $t = 0$, $v = 0$ and $x = 15$ m

i. the time when velocity is agin zero

So, $v = 0$, $t = ?$

Here, $a = 9 - 3t^2$

or, $\frac{dv}{dt} = 9 - 3t^2$

or, $\int dv = \int (9 - 3t^2)\, dt$

or, $v = 9t - 3\frac{t^3}{3} + c_1$

or, $v = 9t - t^3 + c_1$ ..... (i)

when $t = 0$, $v = 0$

$0 = 0 - 0 + c_1$

$\Rightarrow \quad c_1 = 0$

Then, $v = 9t - t^3$

or, $0 = 9t - t^3$

or, $t(9 - t^2) = 0$

or, $t = 0$, $t = \pm 3$

$\Rightarrow \quad t = 3$ secs (neglect –ve sign)



Scanned with CamScanner

ii. the position and velocity when time = 4 secs

$v = 9t - t^3$

$= 9 \times 4 - 4^3$

$= 36 - 64$

$= -28$ m/s

Again, $v = 9t - t^3$

or, $\frac{dx}{dt} = 9t - t^3$

or, $dx = (9t - t^3)\, dt$

On integrating,

or, $\int dx = \int (9t - t^3)\, dt$

or, $x = \frac{9t^2}{2} - \frac{t^4}{4} + c_2$

or, $x = 4.5t^2 - \frac{t^4}{4} + c_2$

When $t = 0$, $x = 15$ m

or, $15 = 4.5 \times 0 - \frac{0}{4} + c_2$

$\Rightarrow \quad c_2 = 15$

So, $x = 4.5t^2 - \frac{t^4}{4} + 15$

When $t = 4$s,

$x = 4.5 \times (4)^2 - \frac{4^4}{4} + 15 = 23$m

iii. the total distance travelled by the particle from $t = 0$ to $t = 4$ sec

Here, $t = 0$ to $t = 4$ sec

But when $v = 0$, $t = 3$ sec

Total distance travelled

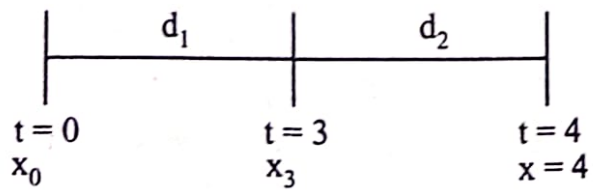




Scanned with CamScanner

$= d_1 + d_2$

$= |x_3 - x_0| + |x_4 - x_3|$

$x_4 = 23m$

$x_0 = 4.5 \times 0 - 0 + 15 = 15m$

$x_3 = 4.5 \times 3^2 - \frac{3^4}{4} + 15 = 35.25$ m

So, Total distance travelled $= |35.25 - 15| + |23 - 35.25|$

$= |20.25| + |-12.25|$

$= 20.25 + 12.25$

$= 32.5$ m

**28. A homeowner uses a snow blower to clean his drive way. Knowing that the snow is discharged at an average angle of 40° with the horizontal, determine the initial velocity ($v_0$) of the snow.**

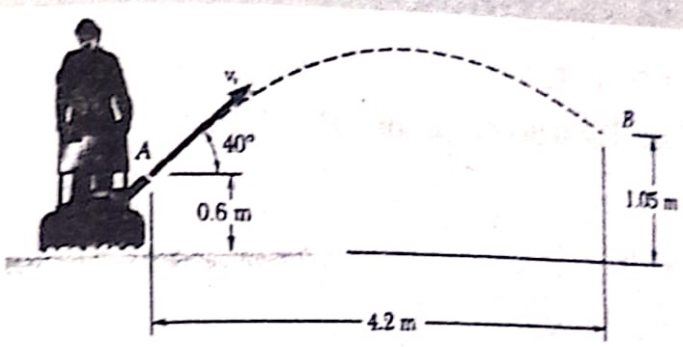


**[2019 Spring, PoU]**

**Solution:**

Initial velocity ($v_0$) of snow = ?

So, $v_x = v_0 \cos 40$, $v_y = v_0 \sin 40°$

For horizontal motion,

$x = v_x \times t$

or, $4.2 = v_0 \cos 40 \times t$

or, $t = \frac{5.483}{v_0}$ ..... (i)

For vertical motion,

$y = v_y t - \frac{1}{2} g t^2$

Here, $y = 1.05 - 0.6 = 0.45$ m



Scanned with CamScanner

So, $0.45 = (v_0 \sin 40)\, t - \frac{1}{2} \times 9.81 \times t^2$

or, $0.45 = (v_0 \sin 40) \times \frac{5.483}{v_0} - 4.905 \times \left(\frac{5.483}{v_0}\right)^2$

or, $0.45 = 3.524 - 4.905 \times \frac{(5.483)^2}{v_0^2}$

or, $0.627\, v_0^2 = 30.063$

or, $v_0^2 = 47.94$

or, $v_0 = 6.93$ m/s

∴ Initial velocity of snow ($v_0$) = 6.93 m/s

**29. A bus starts from rest on a curve of 300m radius and acceleration at the constant rate $a_t = 0.8$ m/s². Determine the distance that the bus will travel before the magnitude of its total acceleration of 1.1 m/s². [2019 Spring, PoU]**

**Solution:**

$u = 0$, $a_t = 0.8$ m/s²

$\rho = 300$m, Total acceleration (a) = 1.1 m/s²

time (t) = ?

Distance (s) = ?

We have, $a = \sqrt{a_t^2 + a_n^2}$

or, $a_n = \sqrt{a^2 - a_t^2} = \sqrt{(1.1)^2 - (0.8)^2} = 0.755$ m/s²

Again,

$a_n = \frac{v^2}{\rho} \Rightarrow v = \sqrt{a_n \times \rho} = \sqrt{0.755 \times 300} = 15.05$ m/s

We have,

$v = u + a_t \times t$

or, $15.05 = 0 + 0.8 \times t$

or, $t = 18.81$ sec

Now, Distance (s) $= u\,t + \frac{1}{2} a_t t^2$

$= 0 \times (18.81) + \frac{1}{2} \times 0.8 \times (18.81)^2$

$= 141.526$ m



Scanned with CamScanner

30. **The relationship between velocity of particle and time is expressed as $v = -3t^2 + 18t$. How far the particle will travel between $t = 4$ secs and $t = 10$ secs and what will be the acceleration at these two times?** **[2017 Spring, PoU]**

**Solution:**

Given, $v = -3t^2 + 18t$

or, $\frac{dx}{dt} = (-3t^2 + 18t)$

or, $dx = (-3t^2 + 18t)\, dt$

Integrating on both sides,

$$x = -3\frac{t^3}{3} + 18\frac{t^2}{2} + c$$

or, $x = -t^3 + 9t^2 + c$

Total distance travelled from $t = 4$ secs to $t = 10$ secs

Here, $v = -3t^2 + 18t$

or, $0 = -3t\,(t - 6)$

Either, $3t = 0$ or $t - 6 = 0$

$\therefore$ $t = 6$ secs

Total distance travelled $= |x_6 - x_4| + |x_{10} - x_6|$

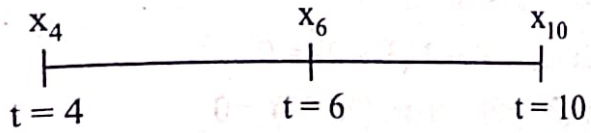


$x_4 = -(4)^3 + 9 \times (4)^2 + c = 80 + c$

$x_6 = -(6)^3 + 9 \times (6)^2 + c = 108 + c$

$x_{10} = -(10)^3 + 9 \times (10)^2 + c = -100 + c$

Total distance travelled

$= |108 + c - (80+c)| + |(-100 + c) - (108 + c)|$

$= |28| + |-208|$

$= 28 + 208$

$= 236$ m

$\therefore$ The particle will travel 236 m

For acceleration, $v = -3t^2 + 18t$

or, $a = \frac{dv}{dt} = -6t + 18$



Scanned with CamScanner

At t = 4 secs, $a_4 = -6 \times 4 + 18 = -6\ m/s^2$

At t = 10 secs, $a_{10} = -6 \times 10 + 18 = -42\ m/s^2$

**31. The motion of a particle is defined by the relation $x = 6t^4 - 2t^3 - 12t^2 + 3t + 3$ where x and t are expressed in meters and seconds respectively. Determine the time, the position and velocity when acceleration a = 0. [2016 Fall, PoU]**

**Solution:**

Given,

$x = 6t^4 - 2t^3 - 12t^2 + 3t + 3$

We have,

$$v = \frac{dx}{dt} = \frac{d}{dt}(6t^4 - 2t^3 - 12t^2 + 3t + 3)$$

or, $v = 24t^3 - 6t^2 - 24t + 3$ .....(i)

Again, $a = \frac{dv}{dt} = 72t^2 - 12t - 24$ .....(ii)

Given, a = 0, t = ?

So, $72t^2 - 12t - 24 = 0$

or, $12(6t^2 - t - 2) = 0$

or, $6t^2 - (4 - 3)t - 2 = 0$

or, $6t^2 - 4t + 3t - 2 = 0$

or, $2t(3t - 2) + 1(3t - 2) = 0$

Either $(3t - 2) = 0$ or, $(2t + 1) = 0$

or, $t = 0.67$ or, $t = -0.5$

Neglect negative sign.

So, t = 0.67 secs

Then, t = 0.67s

Velocity (v)= $24 \times (0.67)^3 - 6(0.67)^2 - 24 \times 0.67 + 3 = -8.55$ m/s

For position,

$x = 6(0.67)^4 - 2(0.67)^3 - 12(0.67)^2 + 3(0.67) + 3 = 0.23$m.

**32. The oscillation of rod OA about O is defined by the relation $\theta = \frac{2}{\pi}\sin(\pi t)$, where θ and t are expressed in radians and seconds respectively. Collar B slides along the**



Scanned with CamScanner

rod so that its distance from O is $r = \frac{625}{(t+6)}$, where r and t are expressed in mm & seconds respectively. When t = 2s, determine

i. velocity of collar

ii. the total acceleration of collar

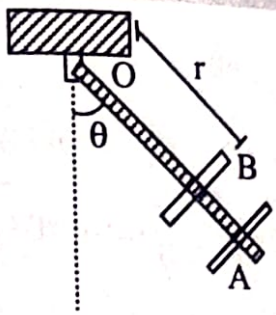


[2016, 2015 Fall, PoU]

**Solution:**

$$r = \frac{625}{(t+6)}$$

$$\dot{r} = \frac{dr}{dr} = 625\frac{d}{dt}(t+6)^{-1} = -\frac{625}{(t+6)^2}$$

$$\ddot{r} = \frac{dr}{dt} = \frac{d}{dt}\left[\frac{-625}{(t+6)^2}\right] = \frac{1250}{(t+6)^3}$$

Now,

$$\theta = \frac{2}{\pi}\sin(\pi t)$$

$$\dot{\theta} = \frac{2}{\pi}\pi\cos(\pi t) = 2\cos\pi t$$

$$\ddot{\theta} = -2\pi\sin\pi t$$

i. Velocity of collar when t = 2s,

$$\vec{v} = v_r\hat{e_r} + v_\theta\hat{e_\theta}$$

$$\vec{v} = \dot{r}\hat{e_r} + r\dot{\theta}\hat{e_\theta}$$

$$= \left[\frac{-625}{(t+6)^2}\right]\hat{e_r} + \left[\frac{625}{(t+6)}\right] \times (2\cos\pi t)\hat{e_\theta}$$



Scanned with CamScanner

$$= \frac{-625}{(8)^2}\hat{e_r} + \frac{625}{8} \times 2\,\hat{e_\theta}$$

$$= -9.76\ \hat{e_r} + 156.25\ \hat{e_\theta}$$

So, $v = \sqrt{(-9.76)^2 + (156.25)^2} = 156.55$ mm/s

ii. Acceleration of collar when t = 2s,

$$\vec{a} = a_r\,\hat{e_r} + a_\theta\,\hat{e_\theta}$$

$$= (\ddot{r} - r\dot{\theta}^2)\,\hat{e_r} + (r\ddot{\theta} + 2\dot{r}\dot{\theta})\,\hat{e_\theta}$$

$$= \left[\frac{1250}{(t+6)^3} - \frac{625}{(t+6)}(2\cos\pi t)^2\right]\hat{e_r}$$

$$+ \left[\frac{1250}{(t+6)^3}(2\pi\sin\pi t) + 2\frac{(-625)}{(t+6)^2} \times (2\cos\pi t)\right]$$

$$= \left[\frac{1250}{8^3} - \frac{625}{8} \times (4)\right]\hat{e_r} + \left[-\frac{1250}{8^3} \times 2\right]\hat{e_\theta}$$

$$= (-310.05)\,\hat{e_r} + (-39.063)\,\hat{e_\theta}$$

$$a = \sqrt{(-310.05)^2 + (-39.063)^2} = 312.501 \text{ mm/s}^2$$

**33. The acceleration of the particles is directly proportional to the time 't'. At time t = 0 secs, the velocity of the particle v = –16 m/s. Knowing that both the velocity and position coordinate are zero when t = 4 secs. Write down the equation of motion of the particles. [2017 Fall, PoU]**

**Solution:**

$a \propto t$

or, $a = kt$

or, $dv = kt\,dt$

Integrating on both sides,

$v = k\frac{t^2}{2} + c_1$ .....(i)

When t = 0, v = –16

So, $-16 = 0 + c_1 \Rightarrow c_1 = -16$

$\therefore\ v = k\frac{t^2}{2} - 16$ .....(ii)

Again, when t = 4 secs, v = 0



Scanned with CamScanner

or, $0 = k\frac{4^2}{2} - 16 \Rightarrow k = 2$

$\therefore \quad v = 2 \times \frac{t^2}{2} - 16 \Rightarrow v = t^2 - 16$ .....(iii)

Now,

$v = t^2 - 16$

or, $dx = (t^2 - 16)\, dt$

Integrating on both sides, we get,

or, $x = \frac{t^3}{3} - 16t + c_2$

When $t = 4$, $x = 0$

or, $0 = \frac{4^3}{3} - 16 \times 4 + c_2 \Rightarrow c_2 = 42.67$

$\therefore \quad x = \frac{t^3}{3} - 16t + 42.67$ .....(iv)

$\therefore$ The equation of motion of particle are:

$a = 2t$

$v = t^2 - 16$

$x = \frac{t^3}{3} - 16t + 42.67$

**34. Pin A, which is attached to link AB, is constrained to move in the circular slot CD. Knowing that t = 0, the pin starts from rest and moves so that the speed increases at a constant rate of 2 cm/s², Determine the magnitude of its total acceleration when t = 0s & t = 2s,**

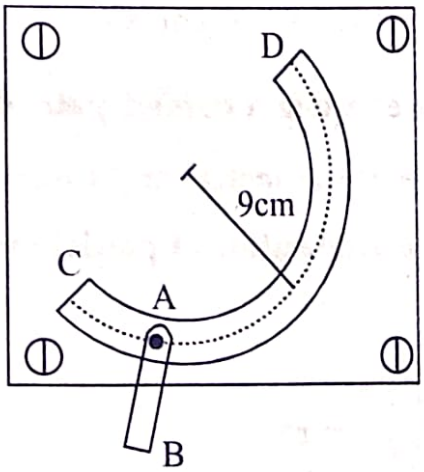


**[2017 Fall, PoU]**



Scanned with CamScanner

**Solution:**

Given, at t = 0, the pin starts from rest & $a_t = 2\ cm/s^2$

i. When t = 0 sec

Total acceleration,

$$\vec{a} = a_t \hat{e_t} + a_n \hat{e_n}$$

$$a_t = 2\ cm/s^2$$

$$a_n = \frac{v^2}{\rho}$$

$$v = u + a_t \times t = 0 + 2 \times 0 = 0\ (\because t = 0)$$

So, $a_n = 0$

i.e.,

$$\vec{a} = 2\hat{e_t} + (0)\hat{e_n}$$

or, $a = \sqrt{2^2 + 0} = 2\ cm/s^2$

ii. When t = 2 secs,

$$a = a_t \hat{e_t} + a_n \hat{e_n}$$

$$a_t = 2\ cm/s^2$$

$$a_n = \frac{v^2}{\rho}$$

or, $v = u + a_t \times t = 0 + 2 \times 2 = 4\ cm/s$

$$a_n = \frac{v^2}{\rho} = \frac{4^2}{9} = 1.77\ cm/s^2$$

$$\vec{a} = 2\hat{e_t} + 1.77\hat{e_n}$$

$$a = \sqrt{(2)^2 + (1.77)^2} = 2.67\ cm/s^2$$

**35. A particle moves along a curved path defined by $r = 4\theta^2$ and $\theta = \frac{t^2}{2}$ where r is in meters and t in seconds. Determine the velocity and acceleration of particle when $\theta = 60°$**

**[2018 Fall, PoU]**

**Solution:**

$$r = 4\theta^2 \Rightarrow r = 4\left[\frac{t^2}{2}\right]^2 \Rightarrow r = t^4$$



Scanned with CamScanner

or, $\dot{r} = \frac{dr}{dt} = 4t^3$

or, $\ddot{r} = \frac{d\dot{r}}{dt} = 12t^2$

Now, $\theta = \frac{t^2}{2}$

$$\dot{\theta} = \frac{d\theta}{dt} = t$$

$$\ddot{\theta} = \frac{d\theta}{dt} = 1$$

Here, $\theta = \frac{t^2}{2}$

or, $\left(60 \times \frac{\pi}{180}\right)^C = \frac{t^2}{2}$

or, $t^2 = 2.093$

or, $t = \sqrt{2.093}$

or, $t = 1.44$ secs

Velocity of the particle $(\vec{v}) = v_r \hat{e_r} + v_\theta \hat{e_\theta}$

$$= \dot{r}\hat{e_r} + r\dot{\theta}\,\hat{e_\theta}$$

$$= (4t^3)\,\hat{e_r} + (t^4 \times t)\,\hat{e_\theta}$$

$$= (4t^3)\,\hat{e_r} + (t^5)\,\hat{e_\theta}$$

$$= [4 \times (1.44)^3]\,\hat{e_r} + (1.44)^5\,\hat{e_\theta}$$

$$= 11.94\,\hat{e_r} + 6.19\,\hat{e_\theta}$$

So, $v = \sqrt{(11.94)^2 + (6.19)^2} = 13.44$ m/s

Acceleration of the particle $(\vec{a})$

$$= a_r \hat{e_r} + a_\theta \hat{e_\theta}$$

$$= (\ddot{r} - r\dot{\theta}^2)\,\hat{e_r} + (r\ddot{\theta} + 2\dot{r}\dot{\theta})\,\hat{e_\theta}$$

$$= [12t^2 - t^4(t)^2]\,\hat{e_r} + [t^4.1 + 2(4t^3 \times t)]\hat{e_\theta}$$

$$= (12t^2 - t^6)\,\hat{e_r} + (t^4 + 8t^4)\,\hat{e_\theta}$$



Scanned with CamScanner

$$= [12(1.44)^2 - (1.44)^6]\,\hat{e_r} + [9 \times (1.44)^4]\hat{e_\theta}$$

$$= 15.967\,\hat{e_r} + 38.69\,\hat{e_\theta}$$

$$a = \sqrt{(15.967)^2 + (38.69)^2}$$

$$= 41.85 \text{ m/s}^2$$

**36. The acceleration of a particle is defined by the relation $a = 25 - 3x^2$ where a is expressed in mm/s² and x is in mm. The particle starts with no initial velocity at the position x = 0. Determine:**

**i. The velocity when x = 2 mm**

**ii. The position where velocity is again zero**

**iii. The position where velocity is maximum.**

**[2018 Spring, PoU]**

**Solution:**

$$a = 25 - 3x^2$$

or, $v\dfrac{dv}{dx} = 25 - 3x^2$

or, $vdv = (25 - 3x^2)\,dx$

On integrating both sides,

$$\frac{v^2}{2} = 25x - 3\frac{x^3}{3} + C$$

or, $\dfrac{v^2}{2} = 25x - x^3 + C$

When, x = 0, v = 0

$0 = 0 - 0 + C$

$\therefore \quad C = 0$

Thus, $\dfrac{v^2}{2} = 25x - x^3$

i. When x = 2 mm

or, $\dfrac{v^2}{2} = 25 \times 2 - (2)^3$

or, $\dfrac{v^2}{2} = 42$

or, $v = 9.165$ mm/s



Scanned with CamScanner

ii. When v is again zero,

$0 = 25x - x^3$

or, $x(25 - x^2) = 0$

or, $x = 0$ & $x = \pm 5$ mm

iii. For maximum velocity, $\frac{dv}{dt} = 0$

or, $a = 0$

or, $25 - 3x^2 = 0$

or, $3x^2 = 25$

or, $x^2 = \frac{25}{3}$

or, $x = \pm 2.88$ mm

**37. A projectile is aimed at a marked on the horizontal plane through a point of projection and falls 10m short when the angle of projection is 15° while overshoots the mark by 25 m when the inclination is 40°. Calculate the distance of target and required angle of projection. Neglect air resistance. [2018 Spring, PoU]**

**Solution:**

Let, the angle of projection be α at a target R.

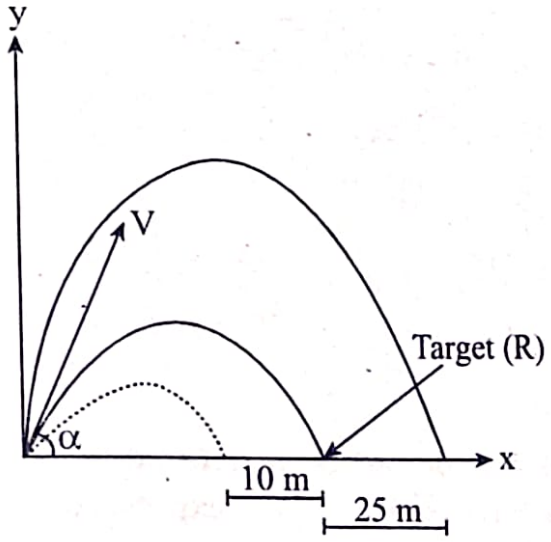


For angle of projection 15°, the projectile falls 10 m short

$$R - 10 = \frac{v^2 \sin^2\theta}{2g}$$



Scanned with CamScanner

or, $R - 10 = \frac{v^2 \sin^2 15°}{2g}$ ..... (i)

For angle of inclination 40° the projectile overshoots the mark by 25m

$R + 25 = \frac{v^2 \sin^2 40°}{2g}$ ..... (ii)

Dividing (i) by (ii)

$\frac{R - 10}{R + 25} = \frac{\sin^2 15°}{\sin^2 40°}$

or, $\frac{R - 10}{R + 25} = 0.162$

or, $R - 10 = 0.162R + 4.05$

$\therefore$ $R = 16.76$ m

For required angle of projection ($\alpha$),

$R = \frac{v^2 \sin^2 \alpha}{2g}$ ..... (iii)

Substituting R in eq. (i), $16.76 - 10 = \frac{v^2}{2 \times 9.81} \sin^2 15°$

or, $132.63 = v^2 \times 0.066$

or, $v = 44.82$ m/s

From (iii), $16.76 = \frac{(44.82)^2 \sin^2 \alpha}{2g}$

or, $\sin^2 \alpha = 0.163$

or, $\alpha = \sin^{-1}\sqrt{0.163}$

or, $\alpha = 24°$

$\therefore$ Distance of target (R) = 16.76 m and angle of projection = 24°

**38. The motion of particle is defined by the relation $x = t^3 - 9t^2 + 24t - 8$ where x and t are expressed in meters and second respectively. Determine**

**i. the time when the velocity is zero**

**ii. the position and total distance travelled when the acceleration is zero. [2019 spring PoU]**



Scanned with CamScanner

**Solution:**

Given $x = t^3 - 9t^2 = 24t - 8$ ..... (i)

i. the time when velocity is zero differentiating on both side

$$\frac{dx}{dt} = 3t^2 - 18t + 24$$

or, $v = 3t^2 - 18t + 24$ ..... (ii)

when $v = 0$

or, $3t^2 - 18t + 24 = 0$

or, $t^2 - 6t + 8 = 0$

or, $t^2 - 4t - 2t + 8 = 0$

or, $t(t - 4) - 2(t - 4) = 0$

or, $(t - 4)(t - 2) = 0$

i.e., $t = 2$ and 4secs

ii. When acceleration = 0,

So, differentiating equation (ii) on both side,

or, $\frac{dv}{dt} = 6t - 18$

or, $a = 6t - 18 = 0$ [$\because a = 0$]

or, $t = 3$ sec

Position $(x_3) = (3)^3 - 9 \times (3)^2 + 24 \times 3 - 8 = 10$ m

Total distance travelled by the particle when $a = 0$

i.e., $t = 3$ sec

The particle starts from $t = 0$ to $t = 3$ sec

So, total distance travelled = $|x_2 - x_0| + |x_3 - x_2|$

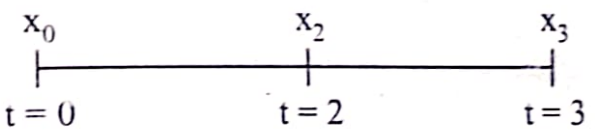


$x_0 = -8$ m

$x_2 = 2^3 - 9 \times (2)^2 + 24 \times 2 - 8 = 12$ m

$x_3 = 10$ m

So, total distance traveled = $|12 - (-8)| + |10 - 12|$



Scanned with CamScanner

$= |12 + 8| + |-2|$

$= 20 + 2$

$= 22m$

**39. The acceleration of a particle as a function of time is given by a = kt where a is linear acceleration in m/s², k is proportionality constant in m/s³ and t is time in seconds. At countdown time t = 0 second, the velocity of the particle v = 2 m/s. Knowing both the velocity and position are zero at the time t = 5 second. Write down final general equation of motion of the particle as a function of time.**

**[2020 spring, PoU]**

**Solution:**

Given $a = kt \Rightarrow dv = kt\,dt$

Integration on both sides,

or, $\int dv = \int kt\,dt$

or, $v = k\frac{t^2}{2} + C_1$ .....(i)

When, $t = 0$, $v = 2$ m/s

or, $2 = C_1$

i.e., $v = k\frac{t^2}{2} + C_1$ .....(ii)

Again, when $t = 5$, $v = 0$

So, $0 = k \times \frac{5^2}{2} + 2$

or, $-2 = k \times \frac{5^2}{2}$

or, $-4 = k \times (25)$

$\Rightarrow k = -0.16$ m/s³

So, equation (ii) becomes,

$v = -0.08t^2 + 2$ .....(iii)

From equation (iii) $dx = (-0.08t^2 + 2)dt$

Integrating on both sides,

or, $\int dx = \int(-0.08t^2 + 2)dt$



Scanned with CamScanner

or, $x = -0.08\frac{t^2}{3} + 2t + C_2$

When t = 5 seconds, x = 0

So, $0 = -0.08\frac{(5)^3}{3} + 2 \times 5 + C_2$

or, $C_2 = -56.67$

So, $x = -0.027t^3 + 2t - 56.67$

Therefore, the general equation of motion of particle as a function of time are:

$a = -0.16t$

$v = -0.08t^2 + 2$

$x = -0.027t^2 + 2t - 56.67$

**40. A girl throw a ball with an initial velocity 18 m/s. Determine (i) the maximum height (h) at which the ball can strike the wall (ii) the corresponding angle made with horizontal.**

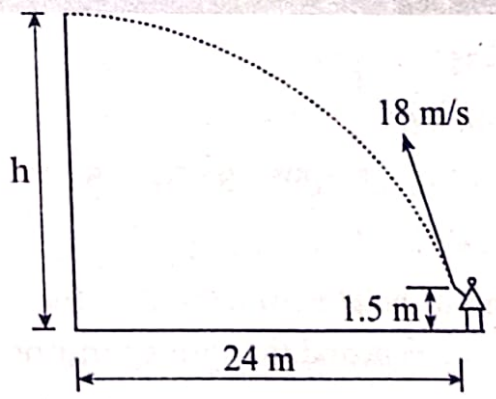


**[2020 Fall, PoU]**

**Solution:**

Given, initial velocity (v) = 18 m/s

Let, corresponding angle with horizontal be θ

Let, horizontal motion,

$x = v_x \times t$

or, $24 = (v\cos\theta) \times t$

or, $t = \frac{24}{18\cos\theta} = 1.33 \sec\theta$

For vertical motion,



Scanned with CamScanner

$$y = v_y t - \frac{1}{2} g t^2$$

or, $h - 1.5 = (v\sin\theta) \times t - \frac{1}{2} \times 9.81 \times t^2$

or, $h - 1.5 = 18\sin\theta \left(\frac{24}{18\cos\theta}\right) - 4.905 \times (1.33\sec\theta)^2$

or, $h - 1.5 = 24\tan\theta - 8.67\sec^2\theta$

or, $h = 1.5 + 24\tan\theta - 8.67\sec^2\theta$ .....(i)

To attain maximum height for corresponding angle, we differentiate on both sides,

$$\frac{dh}{d\theta} = \frac{d}{d\theta}[1.5 + 24\tan\theta - 8.67\sec^2\theta]$$

or, $0 = 24\sec^2\theta - 8.67(2\sec\theta)(\sec\theta.\tan\theta)$

or, $0 = 24\sec^2\theta - 17.34\sec^2\theta \tan\theta$

or, $24\sec^2\theta = 17.34\sec^2\theta \tan\theta$

or, $\tan\theta = 1.384$

or, $\theta = 54.15°$

From equation (i)

So, $h = 1.5 + 24\tan(54.15)° - 8.67\sec^2(54.15)°$

or, $h = 9.293$ m

∴ Maximum height (h) at which the ball can strike the wall is 9.293 m and the corresponding angle ($\theta$) = 54.15°



Scanned with CamScanner

CHAPTER - 9

# KINETICS OF PARTICLE AND RIGID BODY

*Kinetics* is the study of the relation existing between the forces acting on a body, the mass of the body, and the motion of the body. It is used to predict the motion caused by given forces or to determine the forces required to produce a given motion.

## 9.1 Newton's Second Law of Motion and Momentum

Newton's second law states that if the resultant force acting on a particle is not zero, the particle will have an acceleration proportional to the magnitude of the resultant and in the direction of the resultant force.

If a is the acceleration of particle when subjected to force F, then

$$F \propto a$$

or, $F = ma$

where m is proportionality constant known as mass of the particle.

In vector form,

$$\vec{F} = m\vec{a}$$

When a particle is subjected simultaneously to several forces, then

$$\Sigma \vec{F} = m\vec{a} \quad \text{.....(i)}$$

where $\Sigma \vec{F}$ represents the resultant of all the forces acting on the particle.

Equation (i) can be expressed as

$$\Sigma \vec{F} = m\frac{d\vec{v}}{dt}$$

Since the mass m of the particle is constant, we have



Scanned with CamScanner

$$\Sigma \vec{F} = \frac{d(m\vec{v})}{dt} \quad .....(ii)$$

The vector $m\vec{v}$ is called the *linear momentum* or simply the *momentum*, of the particle.

Denoting by $\vec{L}$ the linear momentum of the particle,

$$\vec{L} = m\vec{v}$$

Now, we can express equation (ii) as

$$\Sigma \vec{F} = \dot{\vec{L}}$$

Thus, Newton's second law may also be stated as:

The resultant of the forces acting on the particle is equal to the rate of change of the linear momentum of the particle.

## 9.2 Equations of Motion and Dynamic Equilibrium

### Equations of Motion

From Newton's second law,

$$\Sigma \vec{F} = m\vec{a} \quad .....(i)$$

In order to solve problems involving the motion of a particle, it is more convenient to replace equation (i) by equivalent equations involving scalar quantities.

(i) Rectangular components

$$\Sigma F_x = ma_x, \Sigma F_y = ma_y, \Sigma F_z = ma_z$$

(ii) Tangential and normal components

$$\Sigma F_t = ma_t = m\frac{dv}{dt}$$

$$\Sigma F_n = ma_n = m\frac{v^2}{\rho}$$

(iii) Radial and transverse components

$$\Sigma F_r = ma_r = m(\ddot{r} - r\dot{\theta}^2)$$

$$\Sigma F_\theta = ma_\theta = m(r\ddot{\theta} + 2\dot{r}\dot{\theta})$$



Scanned with CamScanner

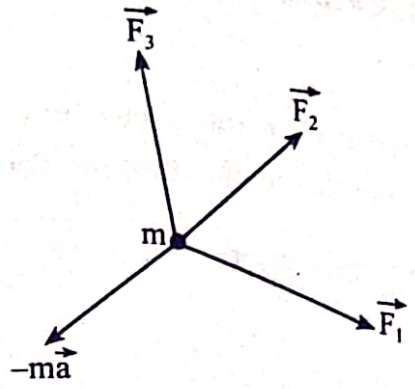


From Newton's second law,

$$\Sigma \vec{F} = m\vec{a}$$

$$\text{or, } \Sigma \vec{F} - m\vec{a} = 0$$

which expresses that if we add the vector $-m\vec{a}$ to the forces acting on the particle, we obtain a system of vectors equivalent to zero. The vector $-m\vec{a}$, of magnitude ma and of direction opposite to that of the acceleration, is called an *inertia vector*. The particle may thus be considered to be in equilibrium under the given forces and the inertia vector. The particle is said to be in *dynamic equilibrium*.

In scalar quantities, we have:

(i) Rectangular components

$$\Sigma F_x - ma_x = 0$$

$$\Sigma F_y - ma_y = 0$$

$$\Sigma F_z - ma_z = 0$$

(ii) Tangential and normal components

$$\Sigma F_t - ma_t = 0$$

$$\Sigma F_n - ma_n = 0$$

(iii) Radial and transverse components

$$\Sigma F_r - ma_r = 0$$

$$\Sigma F_\theta - ma_\theta = 0$$



Scanned with CamScanner

## 9.3 Angular Momentum and Rate of Change

### Angular Momentum

The moment about O of the vector $m\vec{v}$ is called the *moment of momentum*, or the *angular momentum*, of the particle about O at that instant and is denoted by $\vec{H}_O$.

$$\vec{H}_O = \vec{r} \times m\vec{v}$$

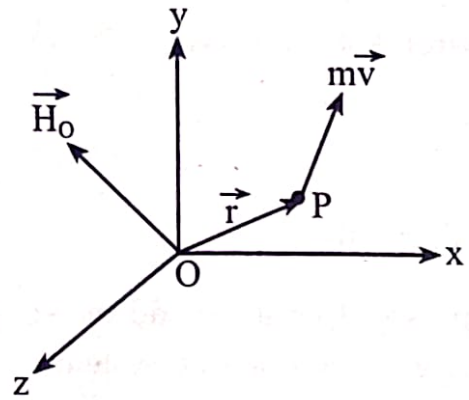


Here,

$$\vec{r} = x\hat{i} + y\hat{j} + z\hat{k}$$

$$m\vec{v} = mv_x\hat{i} + mv_y\hat{j} + mv_z\hat{k}$$

So,

$$\vec{H}_O = \begin{vmatrix} \hat{i} & \hat{j} & \hat{k} \\ x & y & z \\ mv_x & mv_y & mv_z \end{vmatrix}$$

The components of $\vec{H}_O$ are:

$$H_x = m(yv_z - zv_y)$$

$$H_y = m(zv_x - xv_z)$$

$$H_z = m(xv_y - yv_x)$$

In the case of a particle moving in the xy plane, we have z = 0 and hence, $H_x = H_y = 0$. The angular momentum is thus perpendicular to the xy plane and has the magnitude $H_O = H_z = m(xv_y - yv_x)$.



Scanned with CamScanner

## Rate of Change of Angular Momentum

Consider a particle moving in the xy plane i.e., z = 0 plane.

Then, we can write

$$H_O = H_z = mv_y x - mv_x y$$

$$\dot{H}_O = \frac{d}{dt}(H_O) = \frac{d}{dt}(mv_y x - mv_x y)$$

or, $\dot{H}_O = m(\dot{x}v_y + x\dot{v}_y - \dot{y}v_x - y\dot{v}_x)$

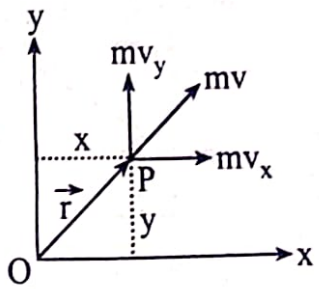


or, $\dot{H}_O = m(v_x v_y + xa_y - v_y v_x - ya_x)$

or, $\dot{H}_O = m(xa_y - ya_x)$

or, $\dot{H}_O = xma_y - yma_x$

or, $\dot{H}_O = xF_y - yF_x$ i.e., moment of force about O.

So, rate of change of angular momentum of a particle about any point at any instant is equal to the moment of forces about that point.

## SOLUTION TO IMPORTANT QUESTIONS

**1. The two blocks as shown in figure below are released from rest when r = 0.73 m and θ = 30°. Neglecting the mass of the pulley and the effect of the friction in the pulley and between block A and the horizontal surface. Determine:**

**a. the initial tension in the cable**

**b. acceleration of the block A and B**

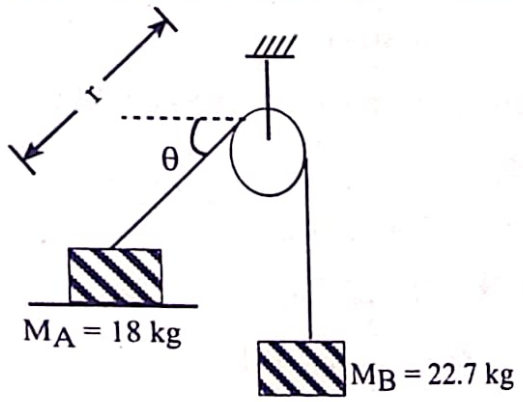




Scanned with CamScanner

**Solution:**

$M_A = 18kg$, $M_B = 22.7$ kg

$r = 0.73$ m and $\theta = 30°$, $\mu = 0$

Let the initial tension in the cable be T.

From above arrangement it can be analyzed that motion of block B is downward white motion of A is towards right direction.

**Block A**

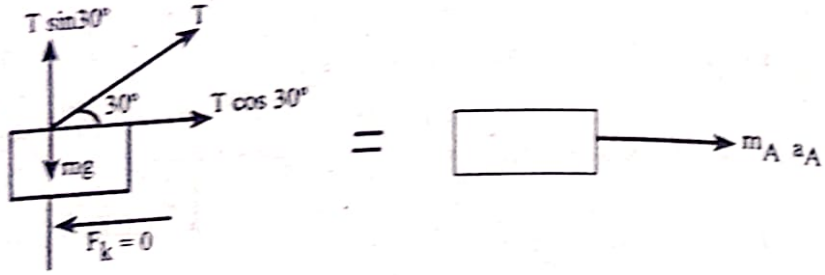


$N = M_A g = 18 \times 9.81$

FBD of block A

From equation of kinetics, $(\xrightarrow{+})$ $\sum F_x = ma_x$

or, $T \cos 30° = M_A a_A$

or, $0.86\ T = 18\ a_A$

or, $T = 20.93\ a_A$ ..... (i)

**Block B**

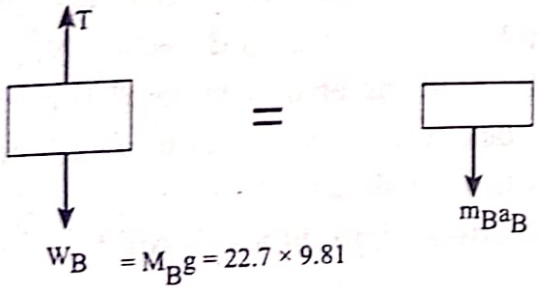


FBD of block B

From equation of kinetics, $(+\downarrow)$ $\sum F_y = Ma_y$

$W_B - T = M_B a_B$

or, $22.7 \times 9.81 - T = 22.7\ a_B$

or, $T = 22.7 \times 9.81 - 22.7\ a_B$

$T = 222.687 - 22.7\ a_B$ ..... (ii)



Scanned with CamScanner

From the arrangement of pulley system, if block B travel $S_B = r$ distance down ward then A will move $r\cos\theta = S_A$ distance towards right.

Then, $S_A = S_B \cos\theta$

or, $S_B = \dfrac{S_A}{\cos\theta}$

where $S_A$ and $S_B$ are distance travelled when $\theta = 30°$

$S_B = \dfrac{S_A}{\cos 30} = 1.154\, S_A$..... (iii)

Differentiating equation (ii) w.r.t. time, we get velocity of A and B, we get

$v_B = 1.55\, v_A$

Again, differentiating, we get

$a_B = 1.155\, a_A$ ..... (iv)

Putting value of $a_B$ in equation (iii), we have

$T = 222.687 - 22.7 \times 1.155\, a_A$

or, $T = 222.687 - 26.218\, a_A$ ..... (v)

From equations (i) and (v),

$222.687 - 26.218\, a_A = 20.93\, a_A$

or, $a_A = \dfrac{222.687}{47.142} = 4.723\ m/s^2$

Acceleration of block B,

$a_B = 1.155 \times 4.723 = 5.456\ m/s^2$

Tension on cable,

$T = 20.93 \times 4.723 = 98.85$ N.

2. **Two blocks A and B having respective weights 500N and 1000N start from rest. The pulley is frictionless and practically mass less. The kinetic coefficient of friction between the block A and the inclined surface is 0.35. Determine the acceleration of each block and tension in the cord.**



Scanned with CamScanner

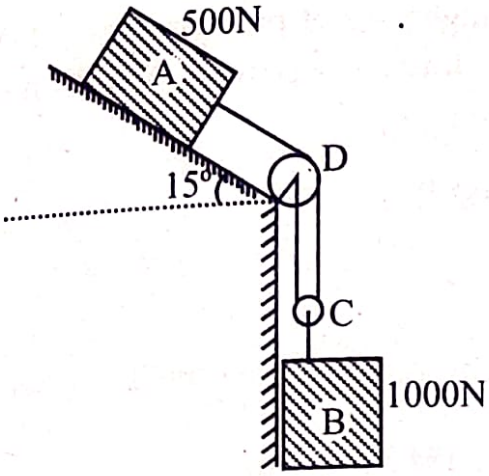


**Solution:**

Let the tension in the cord ADC be $T_1$ and that of BC be $T_2$. From figure, it is clear that when the block A moves $S_A$ distance, block B moves

$$S_B = \frac{S_A}{2}$$

On differentiating for two times successively, we get

$$a_B = \frac{a_A}{2} \quad .....(i)$$

**Block A**

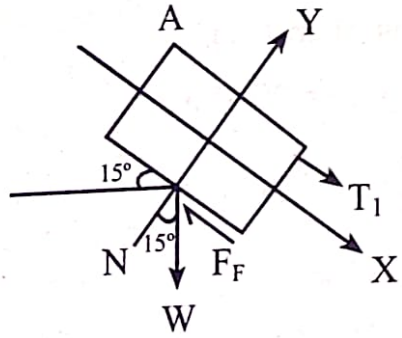


***FBD of block A***

$(+\nearrow)\ \sum F_y = ma_y$

or, $N - W\cos 15^\circ = m \times 0 = 0$

or, $N = W\cos 15^\circ = 500\cos 15^\circ$

$\therefore N = 482.96\ N$

$(+\searrow)\ \sum F_x = ma_x$

or, $W\sin 15^\circ - F_f + T_1 = ma_A$



Scanned with CamScanner

or, $500 \sin 15^\circ - 0.35 \times 482.96 + T_1 = \frac{500}{9.81} a_A$ ($\because F_f = \mu N$)

or, $T_1 = \frac{500}{9.81} a_A + 39.63$ .... (ii)

**Block B**

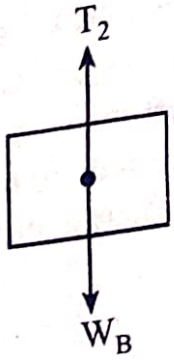


$(+\uparrow) \sum F_y = ma_y$

or, $W_B - T_2 = ma_B$

or, $1000 - T_2 = \frac{1000}{9.81} a_B$

or, $T_2 = 1000 - 101.94\, a_B$ .....(iii)

**Pulley C**

Since mass of pulley is assumed to be zero, we have

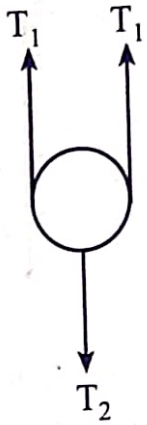


$(+\uparrow) \sum F_y = m_C a_C = 0$

or, $T_2 - 2T_1 = 0$

or, $T_2 = 2T_1$ ..... (iv)

Substituting $T_1$ & $T_2$ from (ii) & (iii) in (iv),we get

$1000 - 101.94 a_B = 2\left(\frac{500}{9.81} a_A + 39.63\right)$

or, $1000 - 101.94 \frac{a_A}{2} = 101.94\, a_A + 79.26$

or, $152.91 a_A = 920.74$

or, $a_A = 6.02\ m/s^2$

Similarly,

$a_B = \frac{a_A}{2} = 3.01\ m/s^2$



Scanned with CamScanner

From equation (ii),

$T_1 = 50.97 \times 6.02 + 39.63 = 346.47$ N

$\therefore T_2 = 2T_1 = 2 \times 346.47 = 692.94$N

**3. Two blocks shown in figure below start from rest. The pulleys are frictionless and having no mass. The kinetic coefficient of friction between the block A and the inclined plane is 0.4. Determine the acceleration of each block and tension in each cord.**

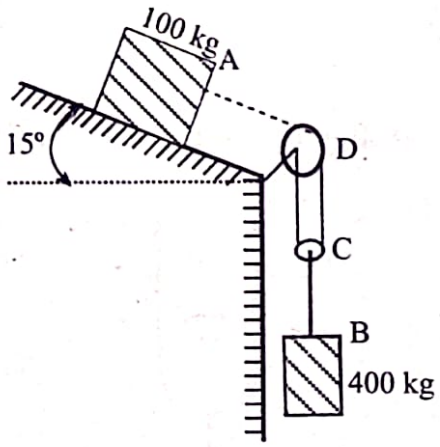


**Solution:**

Let the tension in the cord ADC be $T_1$ and that of BC be $T_2$. From figure, it is clear that, when the block A moves $S_A$ distance, block B moves

$$S_B = \frac{S_A}{2}$$

$$\therefore a_B = \frac{a_A}{2} \quad .....(i)$$

**Block A**

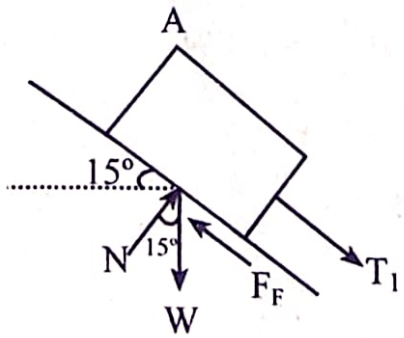


FBD of block A



Scanned with CamScanner

$(\uparrow +) \sum F_y = Ma_y$

or, $N - W\cos 15^\circ = M \times 0 = 0$

or, $N = W\cos 15^\circ = 100 \times 9.81 \times \cos 15^\circ$

$\therefore N = 947.58$ N

$(\overrightarrow{+}) \sum F_x = Ma_x$

or, $W\sin 15^\circ - F_f + T_1 = Ma_A$

or, $9.81 \times 100 \times \sin 15^\circ - 0.4 \times 947.58 + T_1 = 100\, a_A$

(Since, $F_f = \mu N$)

or, $T_1 = 100a_A + 125.13$ .....(ii)

**Block B**

$(\uparrow +) \sum F_y = Ma_y$

or, $W_B - T_2 = M\, a_B$

or, $400 \times 9.81 - T_2 = 400\, a_B$

or, $T_2 = 3924 - 400\, a_B$ .....(iii)

**Pulley C**

Since mass of pulley is assumed to be zero,

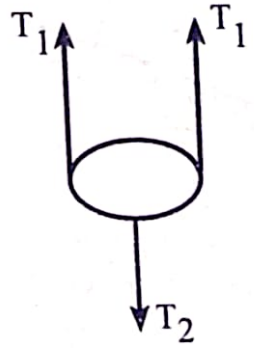


FBD of pulley C

$(\uparrow +) \Sigma F_y = M_c a_c = 0$

or, $T_2 - 2T_1 = 0$

or, $T_2 = 2\, T_1$.....(iv)

Substituting $T_1$ & $T_2$ from (ii) & (iii) in (iv), we get

$3924 - 400\, a_B = 2\,(100a_A + 125.13)$

or, $3924 - 400 \times \frac{a_A}{2} = 200\, a_A + 250.26$ [ from (i) ]

or, $3924 - 200\, a_A = 200\, a_A + 250.26$

or, $400\, a_A = 3673.74$



Scanned with CamScanner

or, $a_A = 9.18\ m/s^2$

$a_B = \frac{a_A}{2} = 4.592\ m/s^2$

From equation (ii),

$T_1 = 100 \times 9.18 + 125.13 = 1043.13\ N$

$\therefore T_2 = 2T_1 = 2086.26\ N$

**4. A body weighing 400N is resting on a rough plane inclined at 20° to the horizontal as shown in figure. It is pulled up the plane from rest by means of a light flexible rope running parallel to the plane and passing over a light frictionless pulley at the top of the plane. The portion of rope beyond the pulley hangs vertically and carries a weight 225 N at the end. If the coefficient of friction for the plane & the body is 0.15, find:**

**(a) Tension in rope.**

**(b) Acceleration of the body and**

**(c) Distance moved by the body in 3 seconds, starting from rest.**

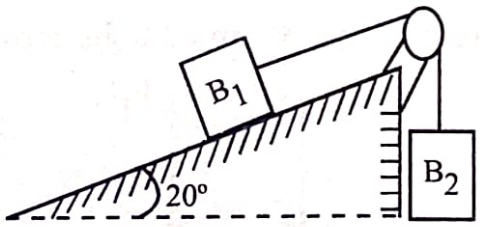


**Solution:**

Let the tension on the rope be T. From figure given, if $B_2$ moves $S_2$ distance, then $B_1$ moves $S_1 = S_2$

$\therefore a_1 = a_2$

**Block $B_1$**

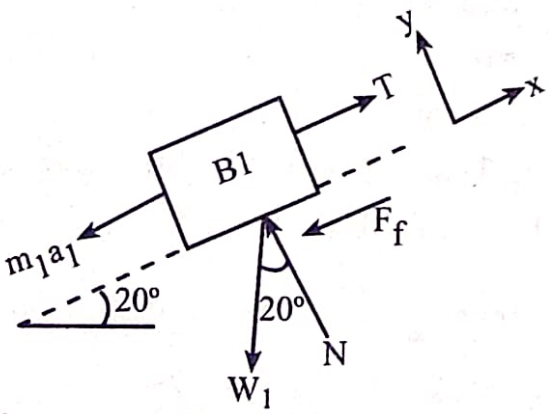


FBD of B1



Scanned with CamScanner

$(+\nearrow)\ \sum F_x = m_1 a_1$

or, $T - W_1 \sin 20^\circ - F_f = m_1 a_1$

or, $T - 400 \sin 20^\circ - 0.15N = \frac{400}{9.81} \times a_1$ .....(a)

$(+\uparrow)\ \sum F_y = m_1 a_y = 0$

or, $N - W_1 \cos 20^\circ = 0$

or, $N = 400 \cos 20^\circ = 375.877$ N

$\therefore$ Equation (a) becomes

$T - 400 \sin 20^\circ - 0.15 \times 375.877 = 40.77\ a_1$

or, $T - 40.77\ a_1 = 193.19$ N .....(b)

**Block $B_2$**

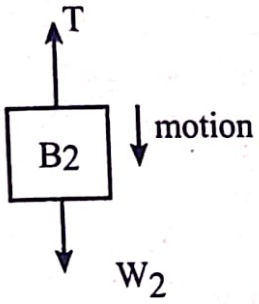


FBD of B2

$(\uparrow +)\ \sum F_y = m_2 a_2$

or, $T - W_2 = m_2(-a_2)$

or, $T + m_2 a_2 - W_2 = 0$

or, $T + \frac{225}{9.81} a_2 - 225 = 0$

or, $T + 22.936\ a_2 = 225$

or, $T + 22.936\ a_1 = 225$ ($\because a_1 = a_2$) .....(c)

Solving equations (b) & (c), we get,

$a_1 = a_2 = 0.5\ m/s^2$

(a) Acceleration of body $= 0.5\ m/s^2$

Hence, from (b),

$T - 40.77 \times 0.5 = 193.19$

or, $T = 213.575$ N



Scanned with CamScanner

(b) Tension in string = 213.575 N

(c) And, distance covered by body in 3 seconds

$s = ut + 0.5\,at^2 = 0 + 0.5 \times 0.5 \times 3^2 = 2.25$ m

**5. Blocks A and B weighing 500N and 1500N respectively are connected by a weightless rope passing over a frictionless pulley as shown in figure. Assume the coefficient of friction as 0.3 on all contact surfaces and determine the velocity of the system 5 sec after starting from rest.**

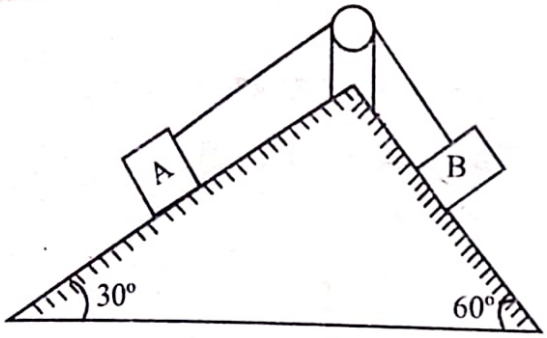


**Solution:**

Given, $\mu = 0.3$

$W_A = 500$ N

$\therefore M_A = \dfrac{W_A}{g} = 50.968$ kg

$W_B = 1500$N

$\therefore M_B = 152.904$ kg

Let the Tension on the rope be T. From given figure, if block B moves $S_B$ distance, block A moves

$S_A = S_B$

$\therefore a_A = a_B$ .....(i)

**Block A**

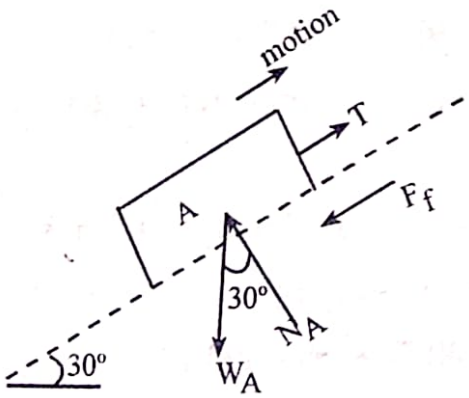


FBD of block A



Scanned with CamScanner

$(+\nearrow)\ \sum F_x = M_A a_x$

or, $T - W_A \sin 30^\circ - F_f = M_A a_A$

or, $T - 500 \sin 30^\circ - 0.3 \times N_A = 50.968 \times a_A (\because F_f = \mu N)$

or, $T - 0.3N_A - 50.968\, a_A - 250 = 0$ .....(ii)

$(+\nwarrow)\ \sum F_y = M_A\, a_y = 0$

or, $N_A - W_A \cos 30^\circ = 0$

or, $N_A = 433.01$ N

$\therefore$ Equation (ii) becomes

$T - 129.903 - 50.968\, a_A - 250 = 0$

or, $T - 50.968\, a_A = 379.903$ .....(iii)

**Block B**

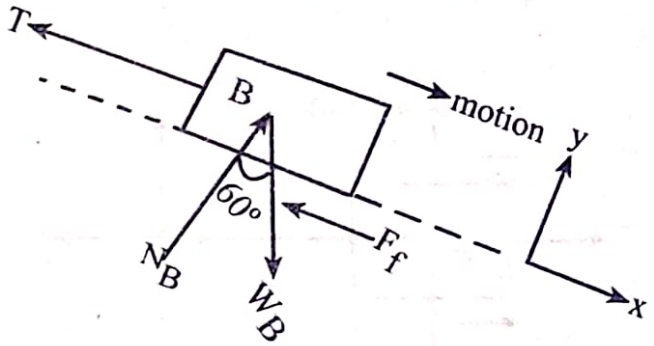


$(+\nearrow)\ \sum F_y = M_B\, a_y = 0$

or, $N_B - W_B \cos 60^\circ = 0$

or, $N_B = 1500 \cos 60^\circ = 750$ N

$(+\searrow)\ \sum F_x = M_B a_x$

or, $-T + W_B \sin 60^\circ - F_f = 152.904 \times a_B$

or, $T + 0.3 \times 750 + 152.904\ a_A = 1500 \times \frac{\sqrt{3}}{2}$ $(\because a_A = a_B)$

or, $T + 152.904\, a_A = 1074.04$ .....(iv)

Solving (iii) & (iv), we get

$a_A = a_B = 3.405\ m/s^2$

Velocity of the system after 5s from rest is

$v = u + at = 0 + 3.405 \times 5$

$\therefore v = 17.025$ m/s



Scanned with CamScanner

**6. Determine the acceleration of block 'A' for the system if the system starts from rest.**

**Given, $\mu_{A,table} = 0.25$, $\mu_{AB} = 0.35$**

**$W_A = 1500N$, $W_B = 900$ N, $W_C = 1500N$**

**$M_A = 152.905$ kg, $M_B = 91.743$ kg, $M_C = 152.905$ kg**

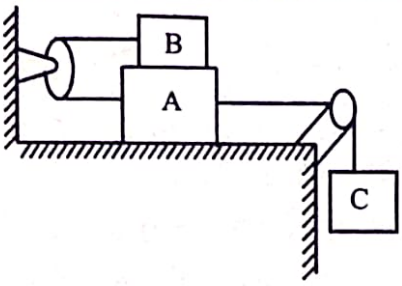


**Solution:**

Let the tension in string connecting the block A and B is $T_1$ and connecting blocks A and C be $T_2$.

**Block A**

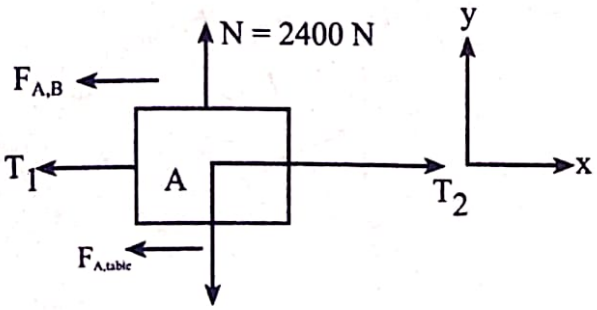


FBD of A

$(+\rightarrow) \sum F_x = M_A a_A$

or, $T_2 - T_1 - F_{A,B} - F_{A,table} = M_A a_A$

or, $T_2 - T_1 - \mu_{A,B} \times N_{A,B} - \mu_{A,table} \times N_A = M_A a_A$

or, $T_2 - T_1 - 0.35 \times 900 - 0.25 \times 2400 = 152.915\, a_A$

or, $T_2 - T_1 - 152.905 a_A - 915 = 0$ .....(i)

**Block B**

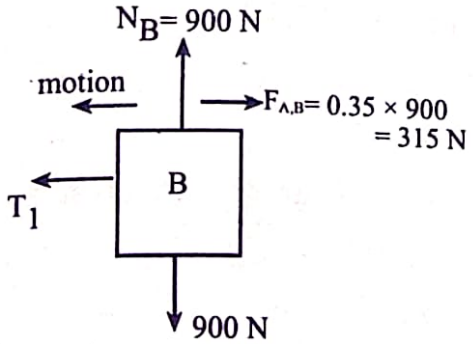


FBD of B



Scanned with CamScanner

$(+\rightarrow)\ \sum F_x = M_B a_B$

or, $-T_1 + F_{A,B} = -91.743\ a_B$

or, $-T_1 + 91.743\ a_B + 315 = 0$ .....(2)

**Block C**

$(\uparrow +)\ \sum F_y = M_C a_C$

or, $T_2 - 1500 = -152.905 \times a_C$

or, $T_2 + 152.905\ a_y - 1500 = 0$ .....(3)

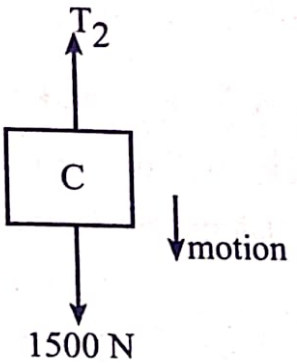


FBD of C

Since $a_A = a_B = a_C = a$, equations (1), (2), (3) becomes

$T_2 - T_1 - 152.905\ a - 915 = 0,$

$-T_1 + 91.743a + 315 = 0,$

$T_2 + 152.905\ a - 1500 = 0$

Solving these equations, we get

$T_1 = 377.294$ N

$T_2 = 1396.116$ N

$a = 0.679\ m/s^2$ Ans

$\therefore$ The acceleration of block A is $0.679\ m/s^2$

**7. Determine the acceleration of the system of the blocks shown in figure. The coefficient of kinetic friction between the block A and inclined plane is 0.2. Determine the tension in the string also. Take $W_A$ = 750N and $W_B$ = 1500 N.**



Scanned with CamScanner

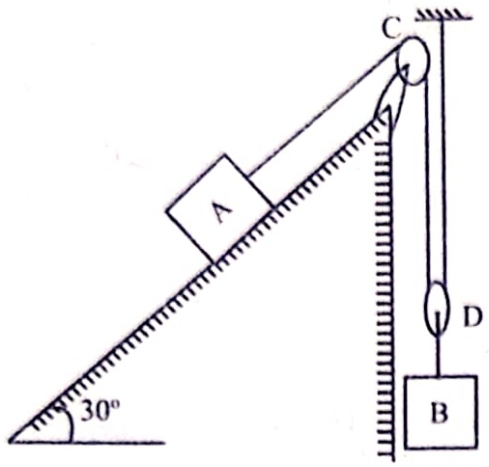


**Solution:**

Let the tension on ACD be $T_1$ and on BD be $T_2$.

Also, $M_B > M_A$, so, block B moves downward.

If block A moves distance $S_A$, then block B moves distance

$$S_B = \frac{1}{2} S_A$$

$$\therefore a_B = \frac{1}{2} a_A \text{ .....(i)}$$

FBD of each component and application of Newton's 2nd law on each is,

**Block A**

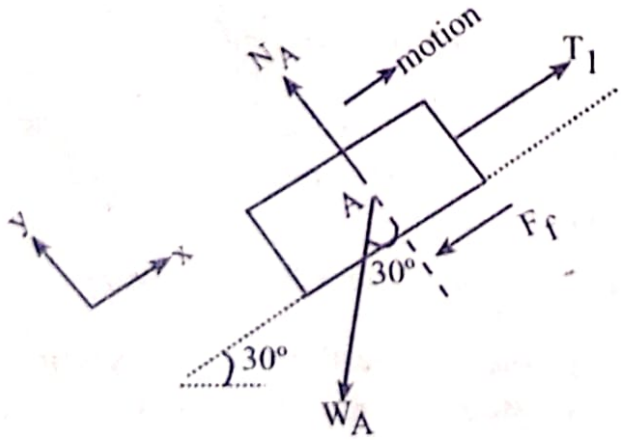


FBD of A

$(+\nwarrow) \sum F_y = M_A a_y = 0$

or, $N_A - W_A \cos 30° = 0$

or, $N_A = 649.52$ N



Scanned with CamScanner

$(\rightarrow +)\ \sum F_x = M_A\, a_x = M_A a_A$

or, $T_1 - F_f - W_A \sin 30^\circ = \dfrac{W_A}{g}\, a_A$

or, $T_1 - 0.2 \times 649.52 - 375 = 76.45\, a_A$ $[\because F_f = \mu N_A]$

or, $T_1 - 504.904 = 76.45\, a_A$

or, $T_1 = 504.904 + 76.45\, a_A$ .....(a)

**Pulley D**

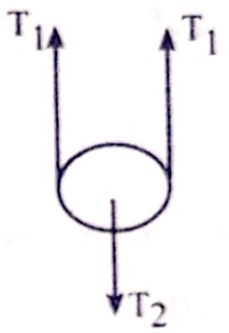


FBD of pulley D

$(\uparrow +)\ \sum F_y = M_D a_y = 0$

or, $2T_1 - T_2 = 0$

or, $2T_1 = T_2$ .....(b)

**Block B**

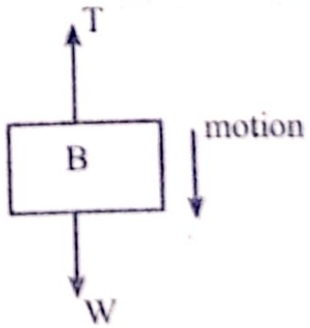


FBD of block B

$(\uparrow +)\ \sum F_y = M_B a_y$

or, $T_2 - W_B = -\, M_B a_B$

or, $T_2 = 1500 - \dfrac{1500}{9.81}\, a_B$ .....(c)

or, $T_2 = 1500 - 152.91\, a_B$ .....(c)

Substituting (a) & (c) in (b),

$2(504.904 + 76.45\, a_A) = 1500 - 15.91\, a_B$



Scanned with CamScanner

or, $1009.808 + 305.8\, a_B = 1500 - 152.91\, a_B$

[$\because a_A = 2a_B$ from (i) ]

or, $490.192 = 458.71\, a_B$

or, $a_B = 1.069\ m/s^2$

$a_A = 2a_B$ [from (i) ]

$\therefore a_A = 2 \times 1.069 = 2.138\ m/s^2$

From equation (a),

$T_1 = 504.904 + 76.45 \times 2.138 = 668.35\ N$

From equation (b),

$T_2 = 2 \times 668.35 = 1336.71\ N$

**8. The resultant external force acting on a 3 kg particle in space is $\vec{F} = (12\, t\hat{i} - 24t^2\hat{j} - 40t^3\hat{k})$ N, where 't' is time measured in seconds. The particle is at rest at origin when t = 0 sec. Determine the x-component of acceleration, velocity and position at the instant of 4 sec.**

**Solution:**

Given, $\vec{F} = 12t\hat{i} - 24t^2\hat{j} - 40t^3\hat{k}$

$\vec{F_x} = 12t\hat{i}$

or, $m\vec{a_x} = 12t\hat{i}$

or, $\vec{a_x} = \frac{12}{3} t\hat{i} = 4t\hat{i}$

$a_x = 4t$

When t = 4 sec, $a_x = 4 \times 4 = 16\ m/s^2$

$v_x = \int a_x\, dt = \int 4t\, dt = 2t^2 + c_1$

When t = 0, $v_x = 0$

$\therefore c_1 = 0$

So, $v_x = 2t^2$

When t = 4 sec, $v_x = 2 \times (4)^2 = 32\ m/s$

$x = \int v_x\, dt = \int 2t^2\, dt = \frac{2t^3}{3} + c_2$



Scanned with CamScanner

When $t = 0, x = 0$

$\therefore c_2 = 0$

So, $x = \frac{2t^3}{3}$

When $t = 4$ sec, $x = \frac{2\times(4)^3}{3} = \frac{128}{3}$ m

**9. A 20-kg package is at rest on an inclined plane when a force P is applied to it. Determine the magnitude of P if 10 s is required for the package to travel 5 m up the inclined plane. The kinetic coefficients of friction between the package and the inclined plane is equal to 0.3.**

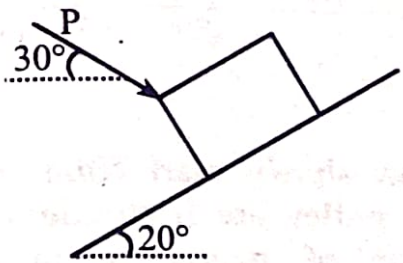


**Solution:**

Mass (m) = 20 kg

Kinetic coefficient of friction ($\mu_k$) = 0.3

Initial velocity (u) = 0 $ms^{-1}$

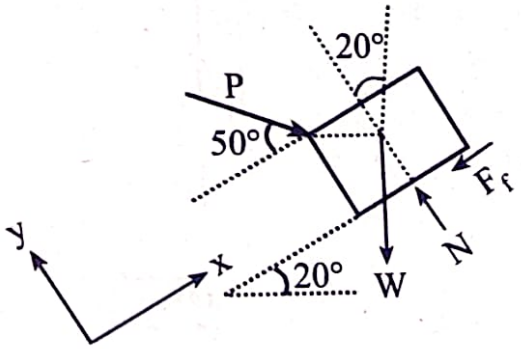


We know that,

$$S = ut + \frac{1}{2}at^2$$

or, $S = 0 \times t + \frac{1}{2}a \times 10^2$

$\therefore \quad a = 0.1\ m/s^2$ ($\angle 20°$)



Scanned with CamScanner

Along the direction perpendicular to the inclined plane,

$(+\nwarrow)\ \Sigma F_y = 0$

or, $N - W\cos 20° - P\sin 50° = 0$

or, $N = mg\cos 20° + P\sin 50°$

Frictional force $(F_f) = \mu_k N = \mu_k(mg\cos 20° + P\sin 50°)$

Along the direction parallel to the inclined plane,

$(+\nearrow)\ \Sigma F_x = 0$

or, $P\cos 50° - W\sin 20° - \mu_k(mg\cos 20° + P\sin 50°) = ma$

or, $$P = \frac{ma + W\sin 20° + \mu_k mg\cos 20°}{\cos 50° - \mu_k \sin 50°}$$

or, $$P = \frac{20 \times 0.1 + 20 \times 9.81\sin 20° + 0.3 \times 20 \times 9.81\cos 20°}{\cos 50° - 0.3\sin 50°}$$

$= 301.3$ N

**10. The two blocks shown start from rest. The horizontal plane and the pulley are frictionless, and the pulley is assumed to be of negligible mass. Determine the acceleration of each block and tension in each cord.**

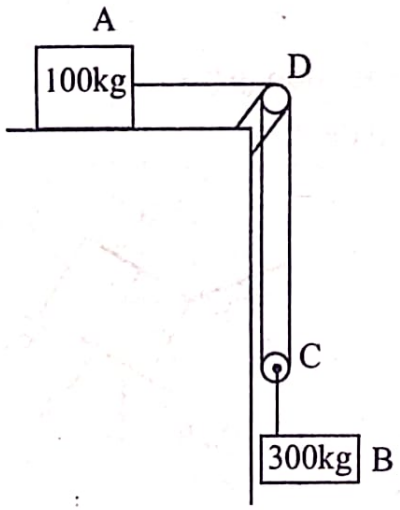


**[2018 Fall, PoU]**

**Solution:**

Let, tension in the cord ADC be $T_1$ and that of BC be $T_2$

From the figure, if block A moves through a distance $x_A$, Then, block B moves through

$$x_B = \frac{x_A}{2}$$



Scanned with CamScanner

$\therefore \quad a_B = \frac{a_A}{2}$ .....(i)

For block A,

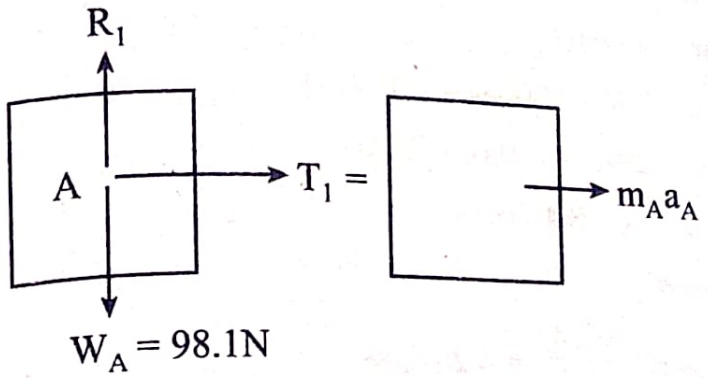


$(\overset{+}{\rightarrow})\Sigma F_x = m_A a_A$

or, $T_1 = 100a_A$ .....(ii)

**For block B,**

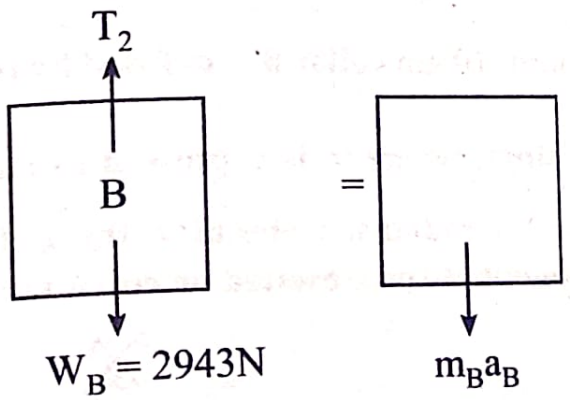


$(+\downarrow)\Sigma F_y = m_B a_B$

or, $2943 - T_2 = 300a_B$

or, $T_2 = 2943 - 300a_B$ .....(iii)

**At pulley C,**

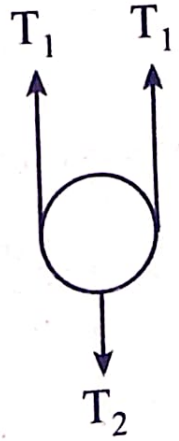




Scanned with CamScanner

Since the mass of pulley is negligible, we have,

$(+\downarrow)\ \Sigma F_y = m_C a_C$

or, $T_2 - 2T_1 = 0$

or, $T_2 = 2T_1$

or, $2943 - 300a_B = 2(100a_A)$

or, $2943 - 150a_A = 200a_A$

or, $a_A = 8.41\ m/s^2$

Now,

$$a_B = \frac{a_A}{2} = \frac{8.41}{2} = 4.2\ m/s^2$$

$T_1 = 100a_A = 100 \times 8.41 = 841\ N$

$T_2 = 2T_1 = 2 \times 8.41 = 1682\ N$

**11. Rod OA oscillates about O in horizontal plane. The motion of 10 gm collar B is defined by relation $r = \frac{8}{t+2}$ and $\theta = \frac{4}{\pi}\sin\pi t$, where 'r' is expressed in meters, 't' in seconds and 'θ' in radians. Determine the radial and transverse component of force exerted on collar when t = 3 secs.**

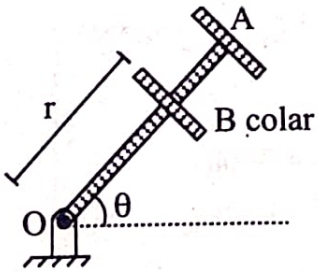


**[2017 Fall, PoU]**

**Solution:**

$r = 8(t+2)^{-1}$

$$\dot{r} = \frac{dr}{dt} = 8\frac{d}{dt}(t+2)^{-1} = -8\,(t+2)^{-2} = \frac{-8}{(t+2)^2}$$

$$\ddot{r} = \frac{dr}{dt} = \frac{d}{dt}(-8)\,(t+2)^{-2} = \frac{16}{(t+2)^3}$$

$$\theta = \frac{4}{\pi}\sin(\pi t)$$



Scanned with CamScanner

$\dot{\theta} = \frac{4}{\pi}\pi\cos(\pi t) = 4\cos\pi t$

$\ddot{\theta} = -4\pi\sin\pi t$

Radial component of force $(F_r) = ma_r$

$= 0.12\,[\ddot{r} - r\dot{\theta}^2]$ [m = 0.12 kg]

When t = 3 secs,

$r = 1.6,\ \ddot{r} = 0.128,\ \dot{\theta} = -4$

So, $F_r = 0.12\,[0.128 - 1.6\,(-4)^2]$

$= 0.12 \times (-25.472)$

$= -3.05$ N

Transverse component of force $(F_\theta) = ma_\theta$

$= 0.12\,[r\ddot{\theta} + 2\dot{r}\dot{\theta}]$

When t = 3 secs,

$r = 1.6,\ \dot{r} = -0.32,\ \dot{\theta} = -4,\ \ddot{\theta} = 0$

So, $F_\theta = 0.12\,[0 + 2 \times (-0.32) \times (-4)]$

$= 0.3$ N

**12. A 105 kg block rests on a horizontal plane. Find the magnitude of the force (P) required to give the block an acceleration of 2.4 m/s² to the right. The coefficient of kinetic friction between block and the plane is $\mu_k = 0.26$.**

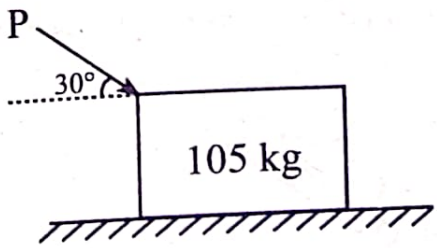


**[2016 Fall, PoU]**

**Solution:**

Given, Weight (W) = 105 × 9.81 = 1030.05 N

Acceleration (a) = 2.4 m/s² to the right

Applying Newton's 2nd law & draw FBD



Scanned with CamScanner

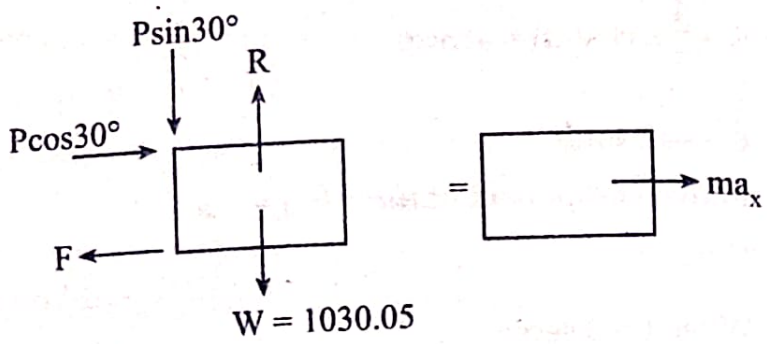


$(\uparrow +)\Sigma F_y = 0$

or, $R - 1030.05 - P\sin 30° = 0$

or, $R = (P\sin 30 + 1030.05)$ .....(i)

$(\overset{+}{\rightarrow})\Sigma F_x = ma_x$

or, $P\cos 30° - F = 105 \times 2.4$

or, $P\cos 30° - 0.26\,R = 252$

or, $P\cos 30° - 0.26\,(P\sin 30° + 1030.05) = 252$

or, $P\cos 30° - 0.13P - 367.813 = 252$

or, $0.736\,P = 519.813$

or, $P = 706.26$ N

$\therefore$ Magnitude of force (P) = 706.26N

**13. Determine the rated speed of a highway curve of radius r = 160 m banked through an angle (θ) = 17° (Hint: The rated speed of banked highway curve is the speed at which a car travel if no horizontal force is to be exerted on its wheels.)**

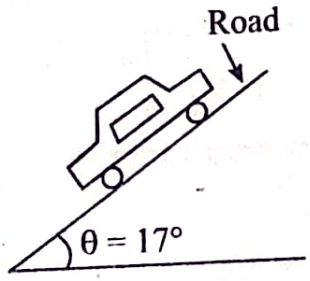


**[2016 Fall, PoU]**

**Solution:**

The car travels in a horizontal circle path of radius (r). The normal component ($a_n$) of the acceleration is directed toward the centre of the path.



Scanned with CamScanner

Applying Newton's 2nd law of motion,

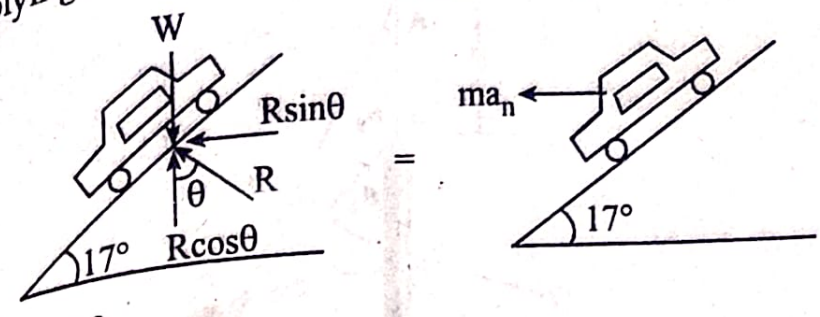


$(\uparrow+)\Sigma F_y = 0$

or, $R\cos\theta - W = 0$

or, $R = \dfrac{W}{\cos\theta}$ .....(i)

$(\overset{+}{\rightarrow})\Sigma F_n = ma_n$

or, $R\sin\theta = ma_n$

or, $\dfrac{W}{\cos\theta}\sin\theta = \dfrac{W}{g}$ an

or, $\tan\theta = \dfrac{a_n}{g}$

or, $a_n = g\tan\theta$

or, $a_n = 9.81 \tan 17°$

or, $a_n = 2.99\ m/s^2$

Then, $a_n = \dfrac{v^2}{\rho}$

or, $v = \sqrt{a_n \times r}$

or, $v = \sqrt{2.99 \times 160}$

or, $v = \sqrt{478.4} = 21.87\ m/s$

**14. A single wire ACB passes through a ring at C that is attached to a 5 kg sphere which revolves at constant speed (v) in the horizontal circle as shown. Knowing that $\theta_1 = 50°$ and d = 0.8 m and the tension in both portions of the wire is 34 N. Determine (a) the angle $\theta_2$ (b) speed of the ball.**



Scanned with CamScanner

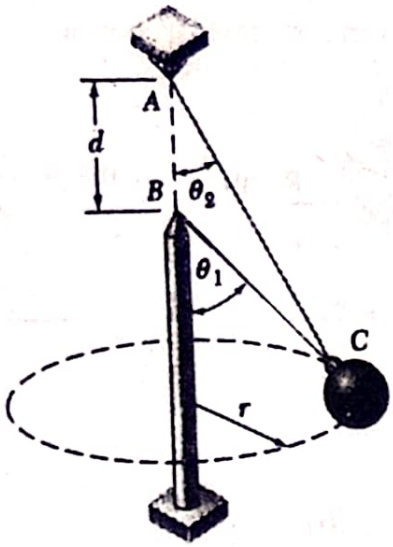


[2019 Fall, PoU]

**Solution:**

Given, Weight of sphere = 5 × 9.81 = 49.05 N

$\theta_1 = 50°$

$\theta_2 = ?$

d = 0.8 m

Tension on both portion of wire (T) = 34N

v = ?

At, C,

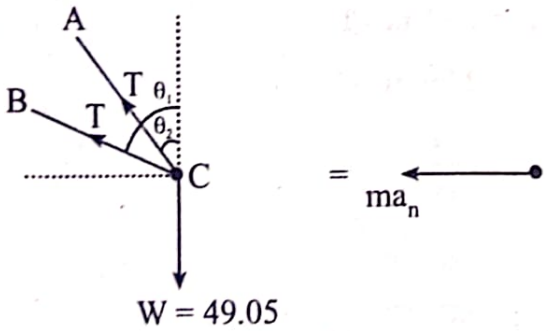


Applying Newton's 2nd Law of motion,

$(\uparrow +)\Sigma F_t = 0$

or, $T\cos\theta_1 + T\cos\theta_2 - W = 0$

or, $T\cos 50° + T\cos\theta_2 = 49.05$

or, $35\cos 50° + 34\cos\theta_2 = 49.05$

or, $21.85 + 34\cos\theta_2 = 49.05$

or, $\cos\theta_2 = 0.8$

or, $\theta_2 = 36.86°$



Scanned with CamScanner

Again, $(\overset{\leftarrow}{+}\Sigma F_n) = ma_n$

or, $T\sin\theta_1 + T\sin\theta_2 = 5xa_n$

or, $34\sin 50° + 34\sin 36.86° = 5\,a_n$

or, $a_n = 9.28\ m/s^2$

Applying simple geometry,

Let, r be he radius of horizontal circle

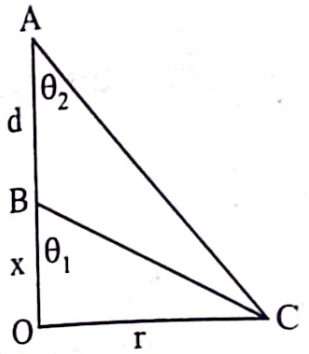


$\text{Tan}\,\theta_1 = \frac{r}{x}$

or, $\text{Tan}50° = \frac{r}{x}$

or, $r = 1.19x$

$\text{Tan}\theta_2 = \frac{r}{d + x}$

or, $\text{Tan}36.86° = \frac{r}{0.8 + x}$

or, $0.74\,(0.8 + x) = 1.19x$

or, $0.592 + 0.74x = 1.19x$

or, $x = 1.31$

$\Rightarrow$ $r = 1.19 \times 1.31 = 1.55$

We have,

$a_n = \frac{v^2}{r}$

or, $v = \sqrt{a_n \times r}$

or, $v = \sqrt{9.28 \times 1.55}$

or, $v = 3.79\ m/s$

Therefore, (i) $\theta_2 = 36.86°$

(ii) Speed of ball (v) = 3. 79 m/s



Scanned with CamScanner

**15. The bob of 3m pendulum describe an arch of circle in a vertical plane. If the tension in the cord is 2 times the weight of bob for the position shown, find the velocity and acceleration of the bob in that position.**

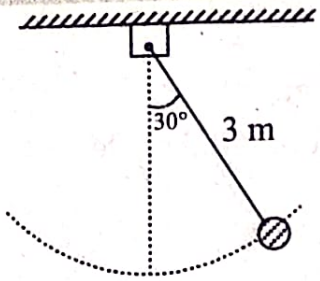


**[2019, 2017 Fall, PoU]**

**Solution:**

Applying Newton's 2nd law of motion,

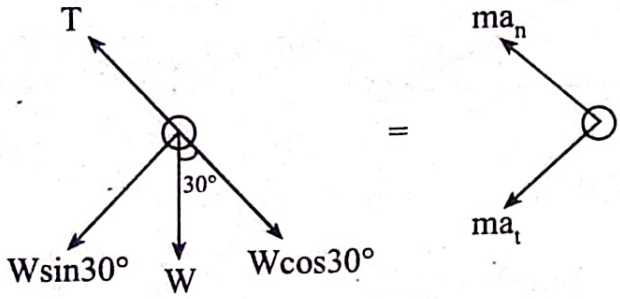


$(+\nwarrow)\Sigma F_n = ma_n$

or, $T - W\cos 30° = \frac{W}{g} \times a_n$

or, $2W - W\cos 30° = \frac{W}{g} \times a_n$

or, $1.133\,W = \frac{W}{g} \times a_n$

or, $a_n = 1.133 \times 9.81$

or, $a_n = 11.11\ m/s^2$

$(+\swarrow)\ \Sigma F_t = ma_t$

or, $W\sin 30° = \frac{W}{g} \times a_t$

or, $a_t = 9.81\sin 30°$

or, $a_t = 4.905\ m/s^2$

So, Total acceleration (a) $= \sqrt{a_n^2 + a_t^2}$

$= \sqrt{(11.11)^2 + (4.905)^2}$

$= \sqrt{147.49} = 12.14\ m/s^2$



Scanned with CamScanner

$$\text{Tan}\alpha = \frac{a_t}{a_n}$$

or, $\text{Tan}\alpha = \frac{4.905}{11.11}$

or, $\alpha = 23.82°$

Again, For velocity

$$a_n = \frac{v^2}{\rho}$$

or, $v = \sqrt{a_n \times \rho}$

or, $v = \sqrt{11.11 \times 3} = 5.77$ m/s

**16. Three blocks A ($m_A$ = 10 kg), B ($m_B$ = 15 kg) and C ($m_C$ = 25kg) are connected with rope and pulley arrangement as shown in the figure. Determine the acceleration of each block and tension in the cable. The coefficient of kinematic friction between the contact plane and the block A and B is 0.3.**

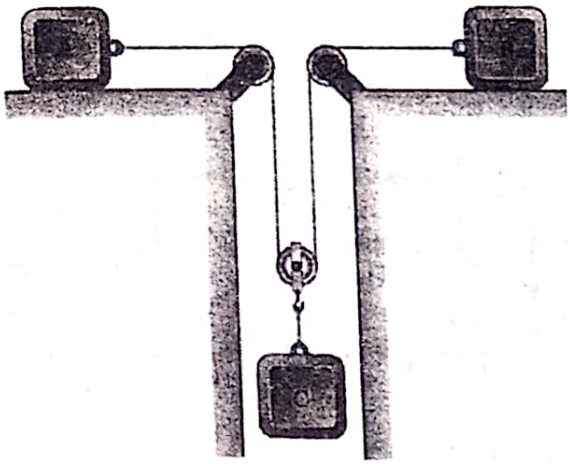

**[2018, 2019 Spring, PoU]**

**Solution:**

The acceleration relationship for the connected pulley is given by $a_C = \frac{a_A + a_B}{2}$ ..... (i)

where, $a_A$, $a_B$ and $a_C$ be the acceleration of block A, B and C respectively.

Let, tension on the cable from block A and B be $T_1$ & that of C be $T_2$.

FBD of black A,



Scanned with CamScanner

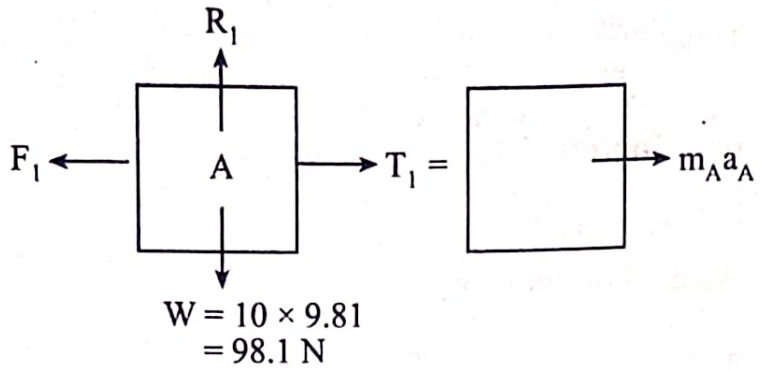


$(\uparrow +)\Sigma F_y = 0$

or, $R_1 - 98.1 = 0 \Rightarrow R_1 = 98.1$ N

$(\overset{+}{\rightarrow})\Sigma F_x = m_A a_A$

or, $T_1 - F_1 = 10a_A$

or, $T_1 - 0.3\, R_1 = 10a_A$

or, $T_1 = 10a_A + 29.43$ ..... (ii)

**FBD of block B,**

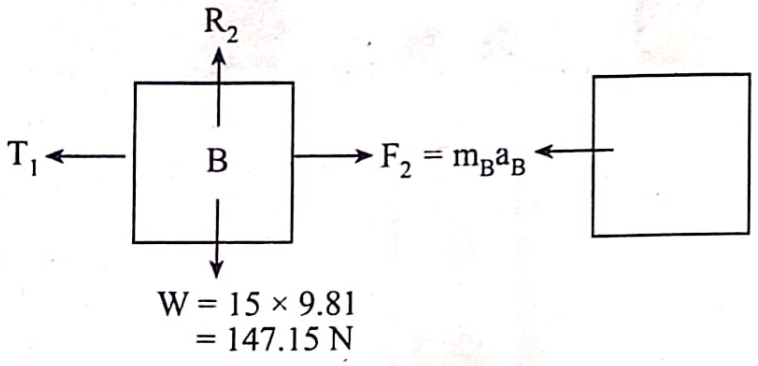


$(+\uparrow)\Sigma F_y = 0$

or, $R_2 - 147.15 = 0 \Rightarrow R_2 = 147.15$N

$\overset{\leftarrow}{+} F_x = m_B a_B$

or, $T_1 - F_2 = 15a_B$

or, $T_1 - 0.3 \times 147.15 = 15a_B$ ( $F = \mu R$)

or, $T_1 = 15a_B + 44.145$ ..... (iii)



Scanned with CamScanner

FBD of block C,

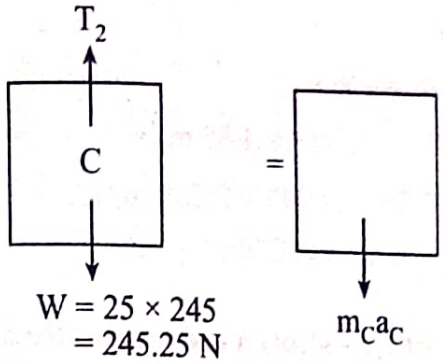


$(+\downarrow)\ \Sigma F_y = m_C a_C$

or, $245.25 - T_2 = 25a_C$

or, $T_2 = 245.25 - 25a_C$ ..... (iv)

At pulley,

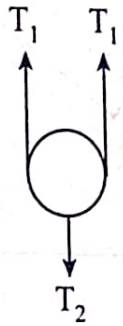


Since, mass of pulley is negligible, we have,

$(+\downarrow)\ \Sigma F_y = 0$

or, $T_2 - 2T_1 = 0$

or, $T_2 = 2T_1$ ..... (v)

From equation (ii), $a_A = 0.1T_1 - 2.943$

From equation (iii), $a_B = 0.067\ T_1 - 2.943$

From equation (iv) & (v)

$a_C = 9.81 - 0.08T_1$

From equation (i),

$$a_C = \frac{a_A + a_B}{2}$$

or, $2(9.81 - 0.08T_1) = 0.1T_1 - 2.943 + 0.067T_1 - 2.943$

or, $19.62 - 0.16T_1 = 0.167T_1 - 5.886$

or, $0.327T_1 = 25.506 \Rightarrow T_1 = 78$ N



Scanned with CamScanner

Therefore,

$T_1 = 78N$

$T_2 = 2 \times 78 = 156N$

$a_A = 0.1\ (78) - 2.943 = 4.85\ m/s^2$

$a_B = 0.067\ (78) - 2.943 = 2.283\ m/s^2$

$a_C = 9.81 - 0.08\ (78) = 3.57\ m/s^2$

**17. The two blocks shown are originally at rest. Neglecting the masses of pulley and the effect of friction in the pulleys and assuming that coefficient of friction between block A and inclined surface as 0.25 determine the acceleration of each block**

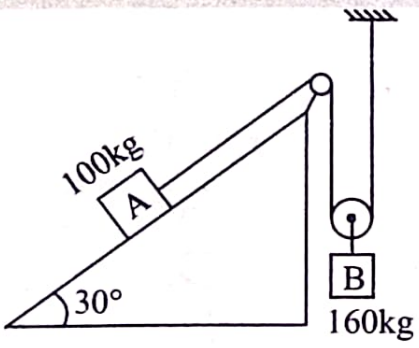


**[2020 Fall, PoU]**

**Solution:**

If the block A moves distance $S_A$, then block B moves distance

$$S_B = \frac{S_A}{2}$$

$$\text{or,}\quad a_B = \frac{a_A}{2} \text{ .....(i)}$$

**FBD of block A,**

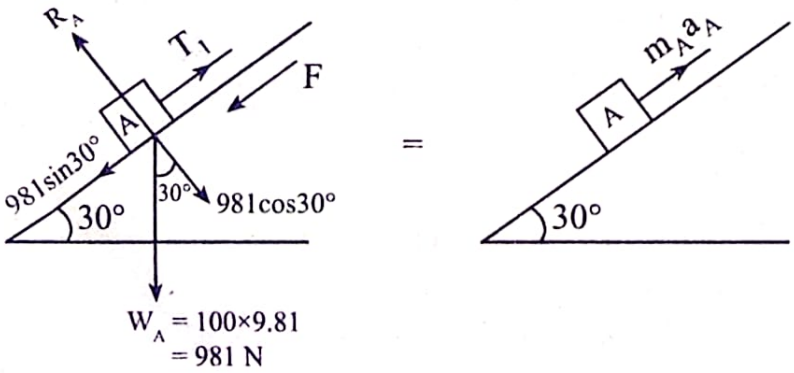




Scanned with CamScanner

From Newton's 2nd law of motion,

$(+\nwarrow)\Sigma F_y = 0$

or, $R_A - 981\cos30° = 0 \Rightarrow R_A = 849.57N$

$(\nearrow+)\Sigma F_x = m_A a_A$

or, $T_1 - 981\sin30° - F = 100\ a_A$

or, $T_1 - 490.5 - 0.25 \times R_A = 100\ a_A$

or, $T_1 = 100a_A + 702.89$ ..... (ii)

**FBD of block B,**

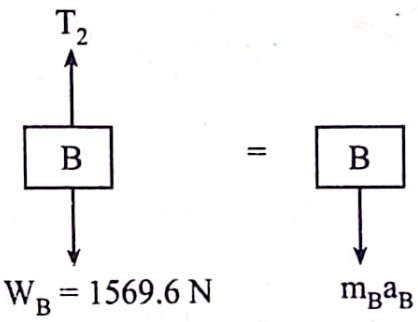


$(+\downarrow)\ \Sigma F_y = m_B\, a_B$

or, $1569.6 - T_2 = 160a_B$

or, $T_2 = 1569.6 - 160a_B$ .....(iii)

At pulley,

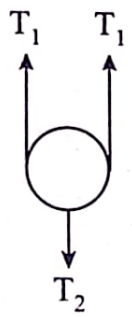


Since the masses of pulley is negligible,

$(+\downarrow)\Sigma F_y = m_C a_C$

or, $T_2 - 2T_1 = 0 \Rightarrow T_2 = 2T_1$ .....(iv)

Now, $1569.6 - 160\ a_B = 2(100a_A + 702.89)$

or, $1569.6 - 160 \times \left[\frac{a_A}{2}\right] = 200a_A + 1405.78$

or, $1569.6 - 80a_A = 200a_A + 1405.78$



Scanned with CamScanner

or, $280a_A = 163.82 \Rightarrow a_A = 0.58 m/s^2$

So, $a_B = 0.29\ m/s^2$ and $a_A = 0.58 m/s^2$

**18. The two blocks of mass, $(m_A) = 40$ kg and $(m_B) = 15$ kg start their downward motion initially from rest. Neglecting the mass of pulleys and the effect of friction in the pulleys, determine the acceleration of each block and tension developed an each cable. Take coefficient of friction = 0.2 on the interface of block B and inclined plane.**

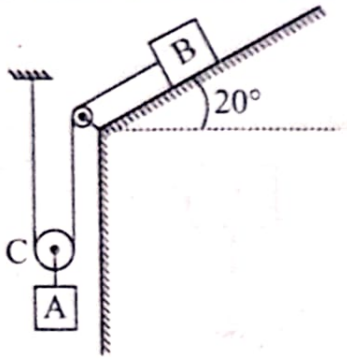


[2020 Spring, PoU]

**Solution:**

If block B moves $S_B$ distance, then block A moves distance

$$S_A = \frac{S_B}{2}$$

or, $a_A = \frac{a_B}{2}$ .....(i)

**FBD of block B,**

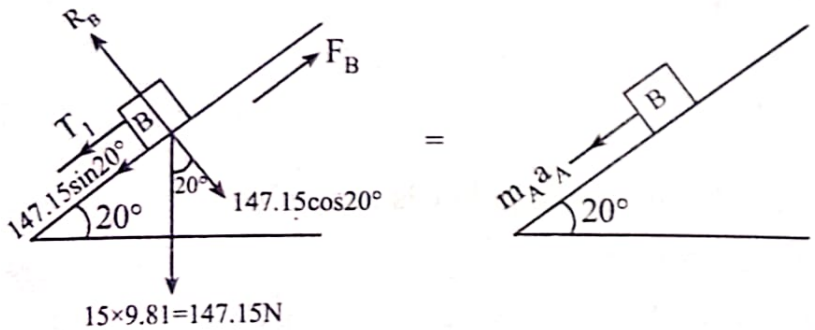


From Newton's 2nd law of motion,

$(+\nwarrow)\Sigma F_y = 0$

or, $R_B - 147.15\cos 20° = 0 \Rightarrow R_B = 138.27$ N

$(\swarrow +)\Sigma F_x = m_B a_B$



Scanned with CamScanner

or, $T_1 - 147.15\sin 20° - F_B = 15a_B$

or, $T_1 - 50.32 - 0.2 \times R_B = 15a_B$

or, $T_1 - 15a_B + 77.97$ ..... (ii)

**FBD of block A,**

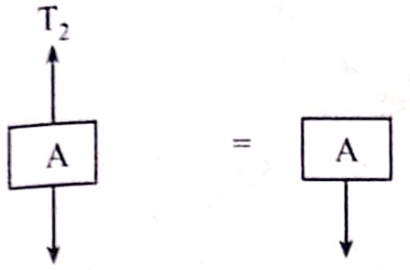


$W_A = 40 \times 9.81$
$= 392.4$ N

$m_A a_A$

$(+\downarrow)\ \Sigma F_y = m_A a_A$

or, $392.4 - T_2 = 40a_A$

or, $T_2 = 392.4 - 40a_A$ ..... (iii)

**FBD of pulley C**

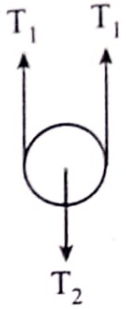


Since the masses of pulley is negligible,

$(+\downarrow)\ \Sigma F_y = m_C a_C$

or, $T_2 - 2T_1 = 0$

or, $T_2 = 2T_1$

or, $392.4 - 40a_A = 2(15a_B + 77.97)$

or, $392.4 - 20a_B = 30a_B + 155.94$

or, $50a_B = 236.46$

or, $a_B = 4.72\ m/s^2$

So, $a_B = 4.72\ m/s^2$ and $a_A = 2.36\ m/s^2$

$T_1 = 15(4.72) + 77.97 = 148.77N$

$T_2 = 2 \times 148.77 = 297.54N$



Scanned with CamScanner

**19. The 5 kg collar A is sliding around a smooth frictionless semi-circular guide rod in a vertical plane. At the instant shown speed of the collar (v) = 4 m/s , which is increasing at rate of 3 m/s². Determine the reaction (N) of the guide rod and the force P at this instant**

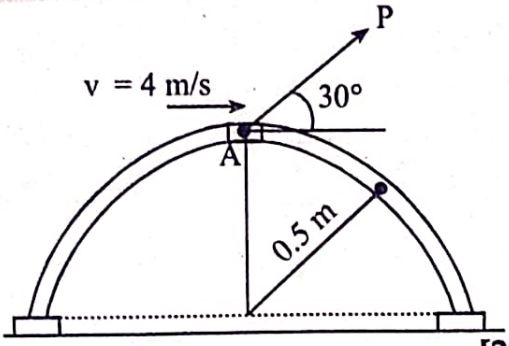


**[2020 spring, PoU]**

**Solution:**

Mass of collar (m) = 5 kg ⇒ Weight (W) = 5 × 9.81 = 49.05N

Velocity (v) = 4 m/s

Normal component $(a_A) = \frac{v^2}{\rho} = \frac{4^2}{0.25} = 32\ m/s^2$

FBD of collar

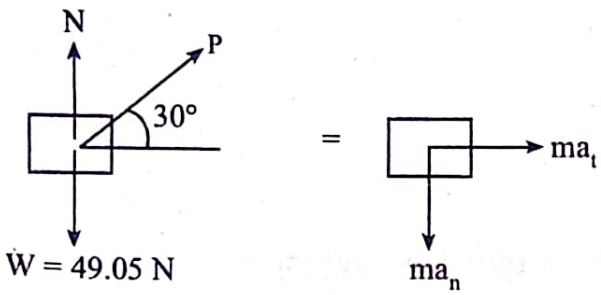


From Newton's 2nd law:

$(\overrightarrow{+})\Sigma F_t = ma_t$

or, $P\cos30° = 5 \times 3 \Rightarrow P = 17.32N$

$(+\uparrow)\ \Sigma F_n = -ma_n$

or, $N - W + P\sin30° = -5 \times 32$

or, $N - 49.05 + (17.32)\sin30° = -160$

or, $N = -119.61N$

∴ Normal reaction (N) = 119.61 N(↓)

∴ Force (P) = 17.32N



Scanned with CamScanner

# MOMENT AND ENERGY IN RIGID BODY

## 10.1 Kinetic Energy of a Particle: Principle of Work and Energy

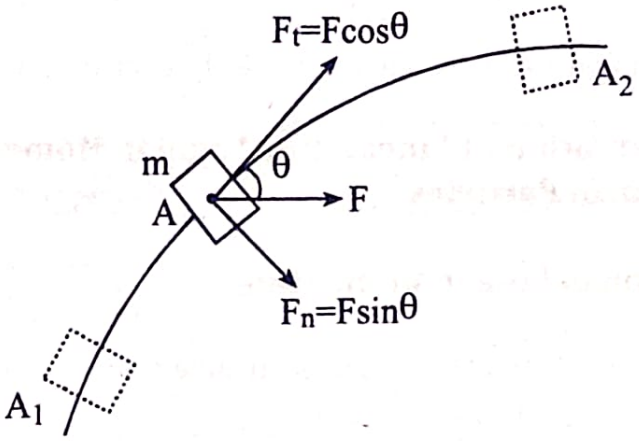


Consider a particle of mass m acted upon by a force $\vec{F}$ and moving along a path which is either rectilinear or curved.

The tangential component of the force is

$$F_t = ma_t = m\frac{dv}{dt}$$

where v is the speed of the particle.

$$\text{or, } F_t = m\frac{dv}{ds}\frac{ds}{dt} = mv\frac{dv}{ds}$$

$$\text{or, } F_t\, ds = mv\, dv$$

Integrating from $A_1$ where $s = s_1$ and $v = v_1$ to $A_2$ where $s = s_2$ and $v = v_2$, we have

$$\int_{s_1}^{s_2} F_t\, ds = m\int_{v_1}^{v_2} v\, dv = \frac{1}{2}mv_2^2 - \frac{1}{2}mv_1^2 \quad \text{.....(i)}$$

The expression $\frac{1}{2}mv^2$ is the kinetic energy of the particle and is denoted by T.

From equation (i),

$$U_{1\text{-}2} = T_2 - T_1 \quad \text{.....(ii)}$$



Scanned with CamScanner

Above equation expresses that the work of the force $\vec{F}$ is equal to the change in kinetic energy of the particle. This is known as the *principle of work and energy*. Rearranging equation (ii), we write

$$T_1 + U_{1\text{-}2} = T_2$$

Thus, the kinetic energy of the particle at $A_2$ can be obtained by adding to its kinetic energy at $A_1$ the work done during the displacement from $A_1$ to $A_2$ by the force $\vec{F}$ exerted on the particle.

## 10.2 Conservation of Linear and Angular Momentum for a System of Particles

### Conservation of Linear Momentum

Consider a particle of mass m acted upon by a force $\vec{F}$. From Netwon's 2nd law of motion,

$$\vec{F} = m\vec{a} = m\frac{d\vec{v}}{dt}$$

$$\text{or, } \vec{F} = \frac{d(m\vec{v})}{dt} \quad \text{.....(i)}$$

where $m\vec{v}$ is called *linear momentum* of the particle.

Equation (i) suggests that the force applied on the particle is equal to the rate of change of linear momentum of the particle.

$$\text{or, } \vec{F}\,dt = d(m\vec{v})$$

Integrating,

$$\int_{t_1}^{t_2} \vec{F}\,dt = \int_{v_1}^{v_2} d(m\vec{v})$$

$$\text{or, } \overrightarrow{Imp}_{1\text{-}2} = m\vec{v}_2 - m\vec{v}_1$$

$$\text{or, } m\vec{v}_1 + \overrightarrow{Imp}_{1\text{-}2} = m\vec{v}_2$$

$$\text{or, } \vec{L}_1 + \overrightarrow{Imp}_{1\text{-}2} = \vec{L}_2 \quad \text{.....(ii)}$$



Scanned with CamScanner

where

$\overrightarrow{Imp}_{1-2}$ = impulse during the interval $t_1$ to $t_2$

$\vec{L}_1$ = initial linear momentum = $m\vec{v}_1$

$\vec{L}_2$ = final linear momentum = $m\vec{v}_2$

Equation (ii) represents *impulse-momentum principle.*

If the particle of mass m is acted upon by several forces at the same time, then equation (ii) will be

$$\vec{L}_1 + \Sigma\overrightarrow{Imp}_{1-2} = \vec{L}_2$$

where,

$\Sigma\overrightarrow{Imp}_{1-2}$ = resultant impulse due to number of forces.

If $\Sigma\overrightarrow{Imp}_{1-2} = 0$, then $\vec{L}_1 = \vec{L}_2$, that is, initial linear momentum = final linear momentum. Thus, the total momentum of the particles is conserved.

**Conservation of Angular Momentum**

From linear impulse momentum principle, we have

$$\Sigma (m\vec{v})_1 + \Sigma (\overrightarrow{Imp}_{1-2})_{ext} = \Sigma(m\vec{v})_2 \quad \text{.....(i)}$$

Again, from angular Impulse momentum principle,

$$(\vec{H}_o)_1 + \Sigma\int_{t_1}^{t_2} (\vec{M}_o)_{ext}\, dt = (\vec{H}_o)_2 \quad \text{.....(ii)}$$

From equations (i) and (ii),we conclude that

$$(\text{system momenta})_1 + (\text{system ext}I_{mp})_{1-2} = (\text{system momenta})_2$$

Thus, the momenta of the particles at time $t_1$ and the impulses of the external forces from $t_1$ and $t_2$ form a system of vector equipollent ( not actually equivalent for a system of particles but will be equivalent for rigid body ) to the system of the momenta of the particles at time $T_2$

When no external forces act on the system of particles impulse due to external forces vanish then moment a are conserved.

$$(\text{system momenta})_1 = (\text{system momenta})_2$$

Thus, angular momentum is conserved.



Scanned with CamScanner

# COORDINATE SYSTEM

## 11.1 Scalar and Vector Quantities

The term "scalar" refers to a quantity whose value may be represented by a single (positive or negative) real number. In other words, the quantities having only magnitude are the scalar quantities. Examples of scalar quantities include mass, density, pressure, volume, temperature, etc. Vector quantities refer to those which have both a magnitude and a direction in space. Examples are force, velocity, acceleration, magnetic flux density, current density, etc.

## 11.2 Types of Coordinate System

### i. Cartesian Coordinate System

- In this system, we set up three coordinate axes mutually at right angles to each other namely x, y, and z axes.
- Any point P is specified as P (x, y, z) and the point is the intersection of three mutually perpendicular planes namely x = constant, y = constant, and z = constant.

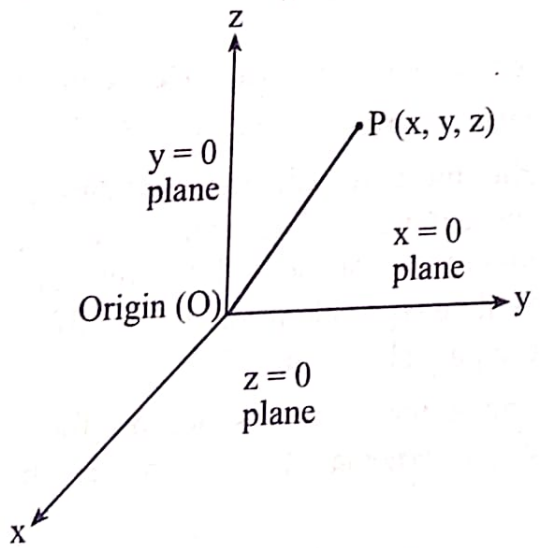


**Fig.: Cartesian co-ordinate system**



Scanned with CamScanner

ii. **Cylindrical Coordinate System**

- It is the three dimensional version of the polar coordinates of analytic geometry. The circular cylindrical coordinate system is very convenient whenever we are dealing with problems having cylindrical symmetry.
- Any point P is specified as P ($\rho$, $\phi$, z) and the point is the intersection of three mutually perpendicular surfaces namely a circular cylinder ($\rho$ = constant), a plane ($\phi$ = constant), and another plane (z = constant).

  where $\rho$ = radius of the circular cylinder

  $\phi$ = angle between the x-axis and the projection of the line joining origin and point P in the z = 0 plane.

  z = height of the cylinder.

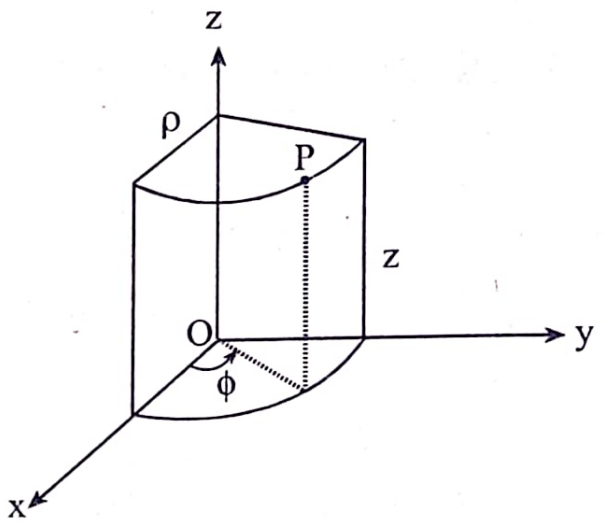


*Fig.: The cylindrical coordinate system.*

iii. **Spherical Coordinate System**

- The spherical coordinate system is most appropriate when one is dealing with problems having a degree of spherical symmetry.
- Any point P is specified as P(r, $\theta$, $\phi$) and the point is the intersection of three mutually perpendicular surfaces namely a sphere, a cone, and a plane.



Scanned with CamScanner

where r = radius of the sphere

$\theta$ = angle between the line joining origin and point P, and the z-axis.

$\phi$ = angle between the x-axis and the projection of line joining origin and point P in the z = 0 plane.

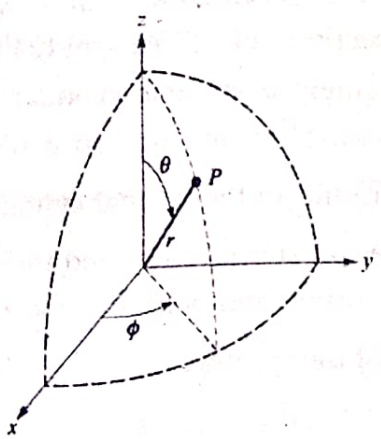


*Fig.: The three spherical coordinates.*



Scanned with CamScanner

## BIBLIOGRAPHY

**Ferdinand P. Beer, E. Russell Johnston**, *Vector Mechanics for Engineers (Statics and Dynamics)*, 12th ed., New York: Tata Mc-Graw Hill Companies, 2019.

**R. C. Hibbeler, Ashok Gupta,** *Engineer Mechanics - Statics and Dynamics*, 13th ed., New Delhi: Pearson, 2012.

**Shame, I.H.,** *Engineer Mechanics - Statics and Dynamics*, 13th ed., New Delhi: Prentice Hall of India, 2005.

**R. S. Khurmi**, *Applied Mechanics and Strength of Materials*, 13th ed., New Delhi: S. Chand and Company Ltd., 2005

**Dr. Hari Ram Parajuli, Er. Sudan Neupane**, *Applied Mechanics for Engineers*, 2nd ed., Kathmandu: M. K. Publishers and Distributors, 2019.



Scanned with CamScanner