07:53 4G 27%

1.bmp

A square prism 30 mm sides of base and 50 mm axis length rests on HP on one of its edges of the base which is inclined to VP at 30 degrees. Draw the projections of the prism when the axis of the prism is inclined to HP at 45 degrees.

M2-P1

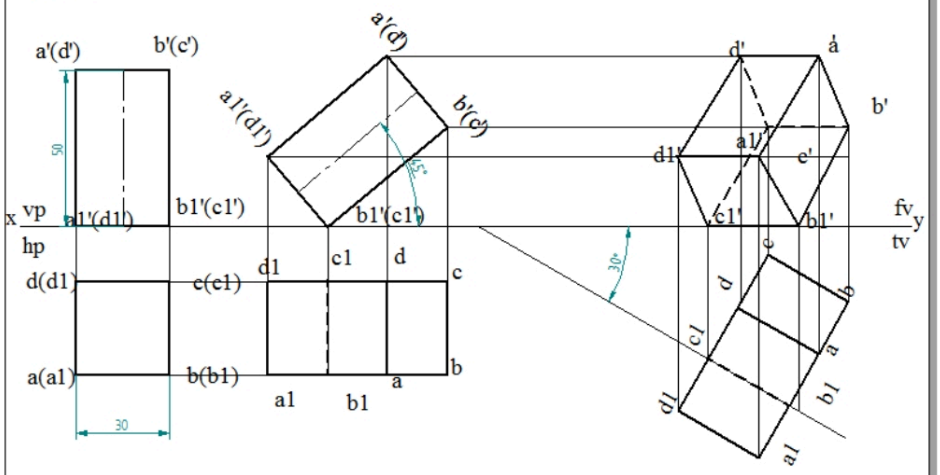

07:55 4G 26%
2.bmp

A square prism 30 mm sides of base and 50 mm axis length rests on HP on one of its corners of the base such that the two base edges containing the corner on which it rests makes equal inclination with HP. Draw the projections of the prism when the axis of the prism is inclined to HP at 40 degrees and appears to be inclined at 45 degrees to VP.

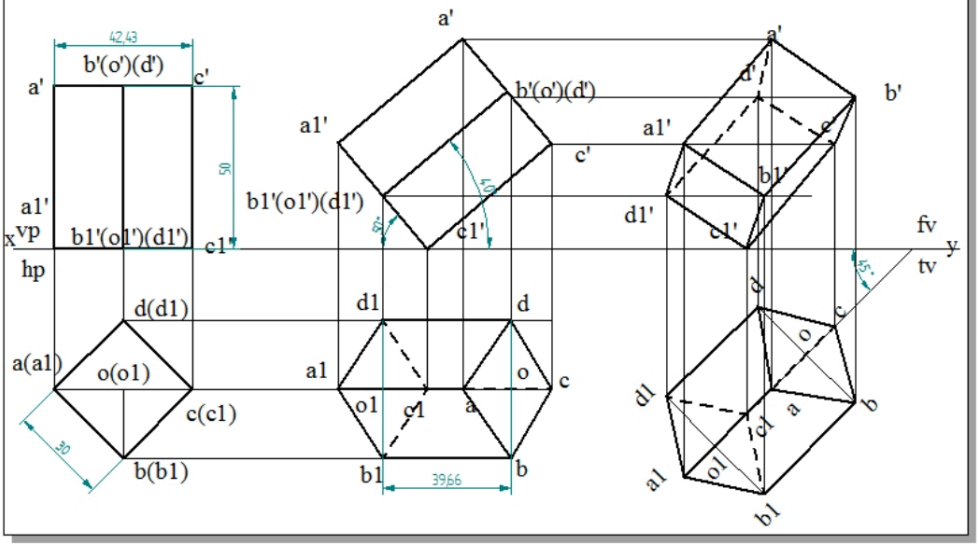

07:56 4G 26%
3.bmp

A pentagonal prism 25 mm sides of base and 60 mm axis length rests on HP on one of its edges of the base which is inclined to VP at 30 degrees. Draw the projections of the prism when the axis is inclined to HP at 40 degrees.

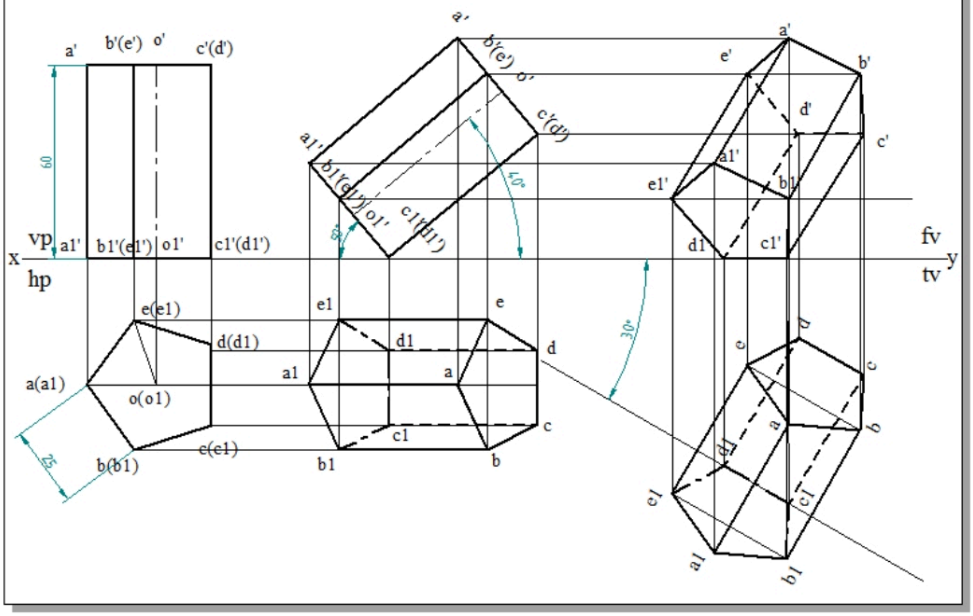

A hexagonal prism 25 mm sides of base and 50 mm axis length rests on HP on one of its edges. Draw the projections of the prism when the axis is inclined to HP at 45 degrees and appears to be inclined to VP at 40 degrees. Also determine the true inclination of the axis with VP.

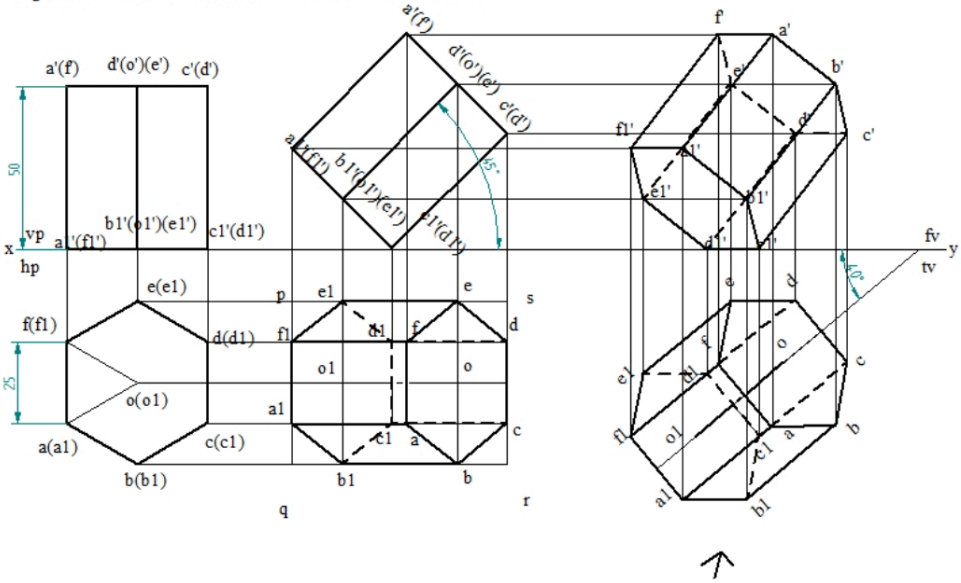

07:56 4G 26%
5.bmp

A square pyramid 30 mm sides of base and 50 mm axis length rests on HP on one of its edges of the base. Draw the projections of the pyramid when the axis is inclined to HP at 45 degrees and VP at 30 degrees.

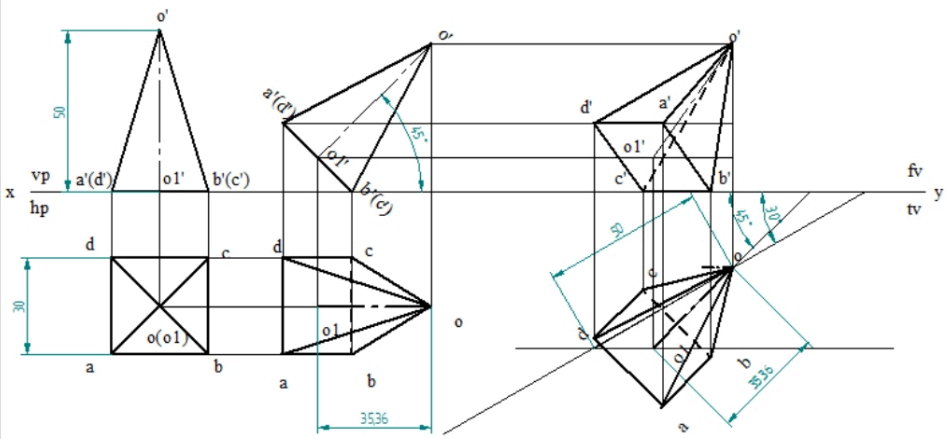

07:57 4G 26%
6.bmp

A hexagonal pyramid 25 mm sides of base and 50 mm axis length rests on HP on one of its corners of the base such that the two base edges containing the corner on which it rests make equal inclinations with HP. Draw the projections of the pyramid when the axis of the pyramid is inclined to HP at 40 degrees and appears to be inclined to VP 45 degrees.

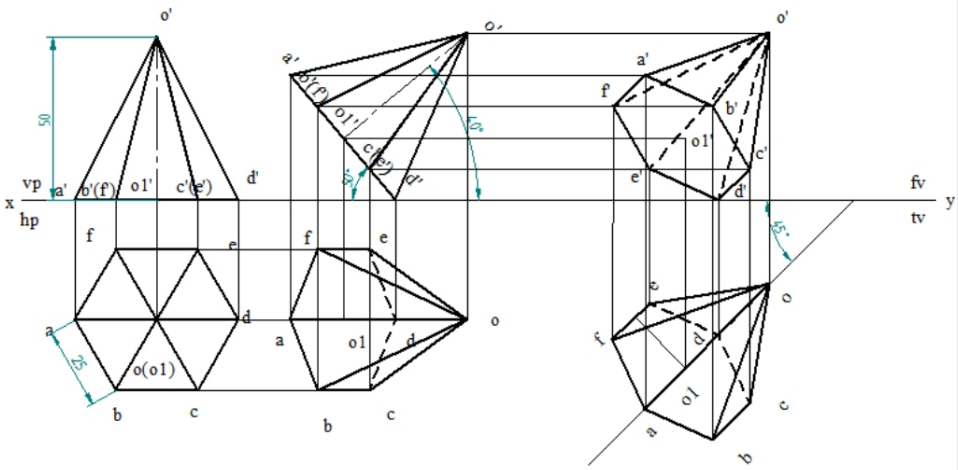

07:57 4G 26%
7.bmp

A pentagonal pyramid 25 mm sides of base and 50 mm axis length rests on HP on one of its edges. Draw the projections of the pyramid when the axis is inclined to HP at 45 degrees and appears to be inclined to VP at 40 degrees. Also determine the true inclination of the axis with VP.

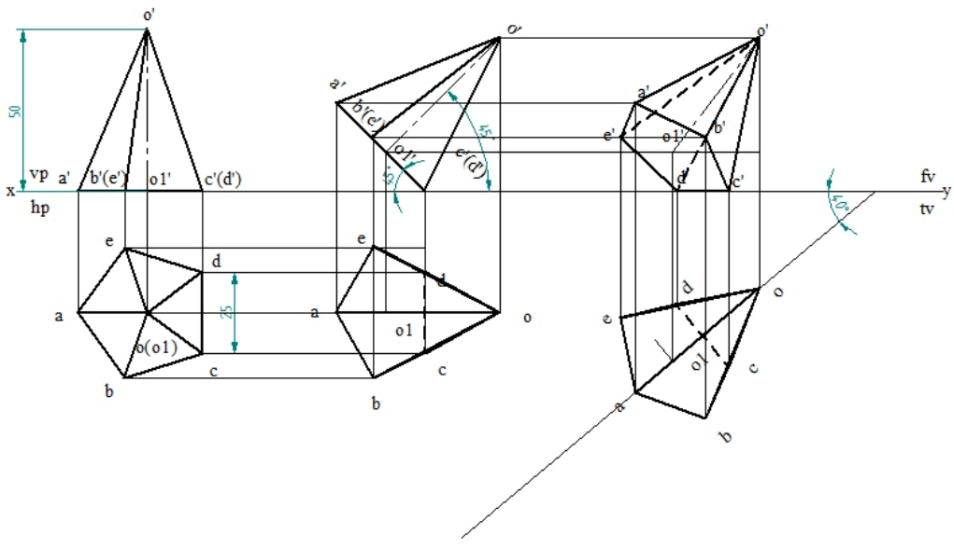

07:58 4G 26%

8.bmp

A cone of 50 mm base diameter and 60 mm axis length rests on HP on a point on the circumference of its base such that the apex is at 40 mm above HP and the axis appears to be at 60 degrees to VP. Draw the projections of the cone.

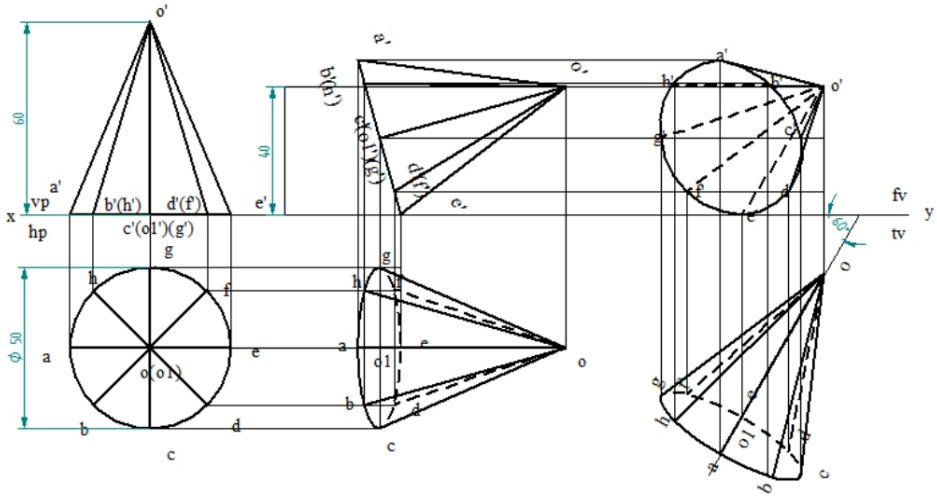

07:58 4G 26%
9.bmp

A square pyramid of base side 30 mm and axis height 60 mm rests on HP on one of its edges of the base such that the apex of the pyramid is at height of 50 mm above HP and the axis is inclines to VP by 40 degrees. Draw the projections of the pyramid and determine the inclination of the axis with HP.

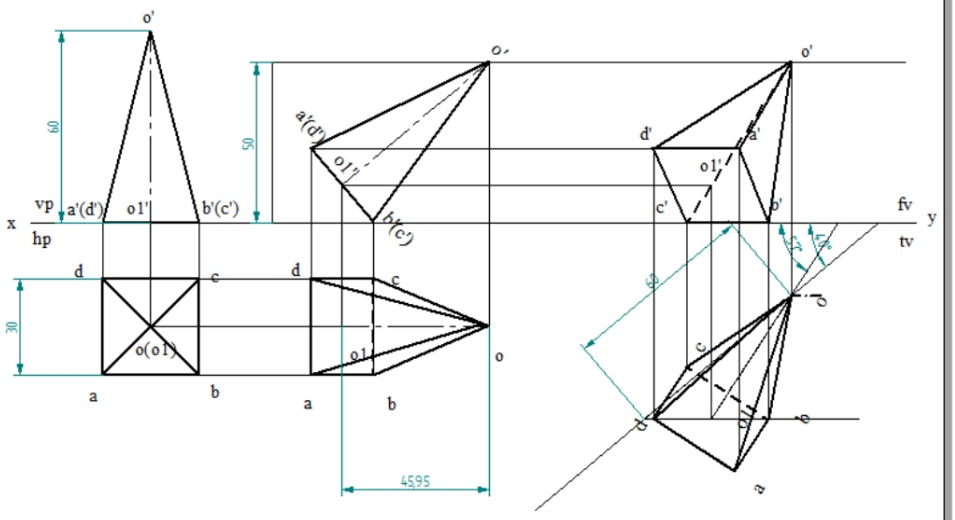

07:59 4G 26%
10.bmp

A square pyramid 35 mm sides of base and 60 mm axis length rests on HP on one of its corners of its base such that the two base edge containing the resting corner makes equal inclination with HP. Draw the projections of the pyramid when the axis of the pyramid is inclined at 40 degrees to HP and 30 degrees to VP.

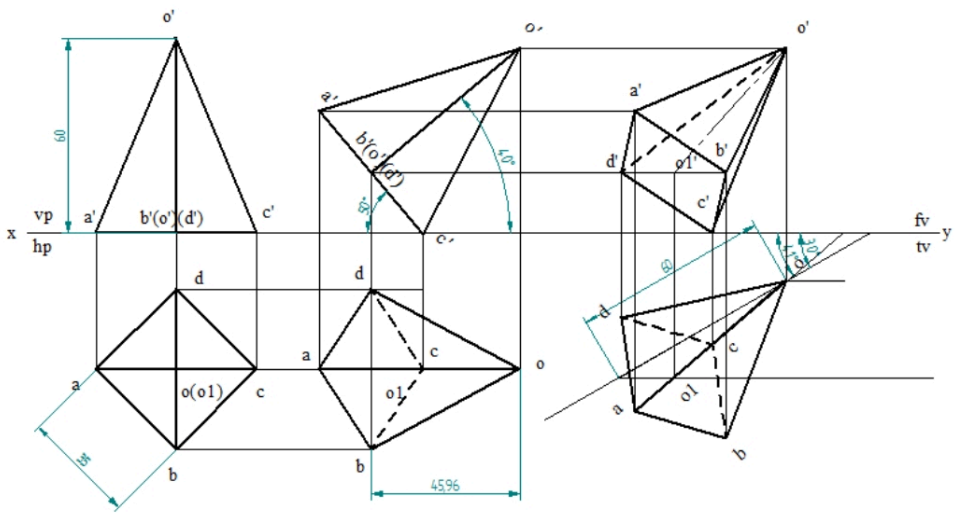

07:59 4G 26%
11.bmp

A hexagonal pyramid 25 mm sides of base and 50 mm axis length rests on HP on one of its slant triangular faces. Draw the projections of the pyramid when the axis appears to be inclined to VP at 45 degrees. Also determine the angle axis makes with VP.

M3-P1

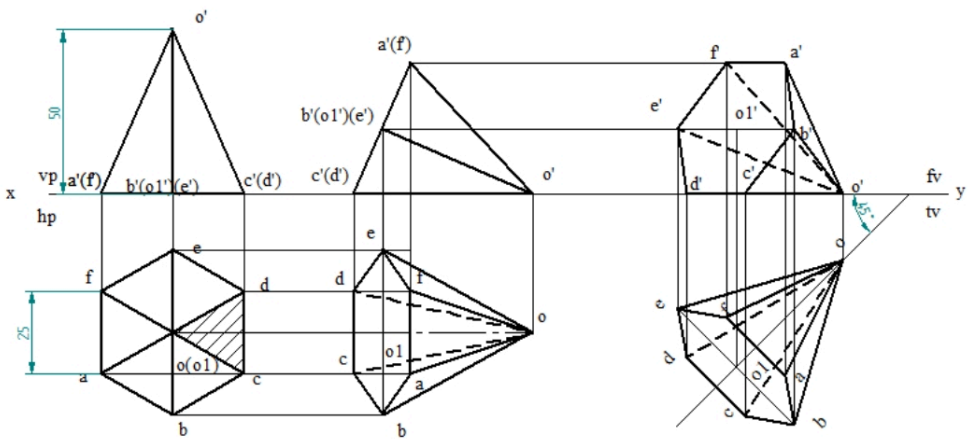

08:00 4G 25%
12.bmp

A pentagonal pyramid 25 mm sides of base and 50 mm axis length rests on HP on one of its slant edges. Draw the projections of the pyramid when the axis appears to be inclined to VP at 45 degrees and the base is nearer to the observer

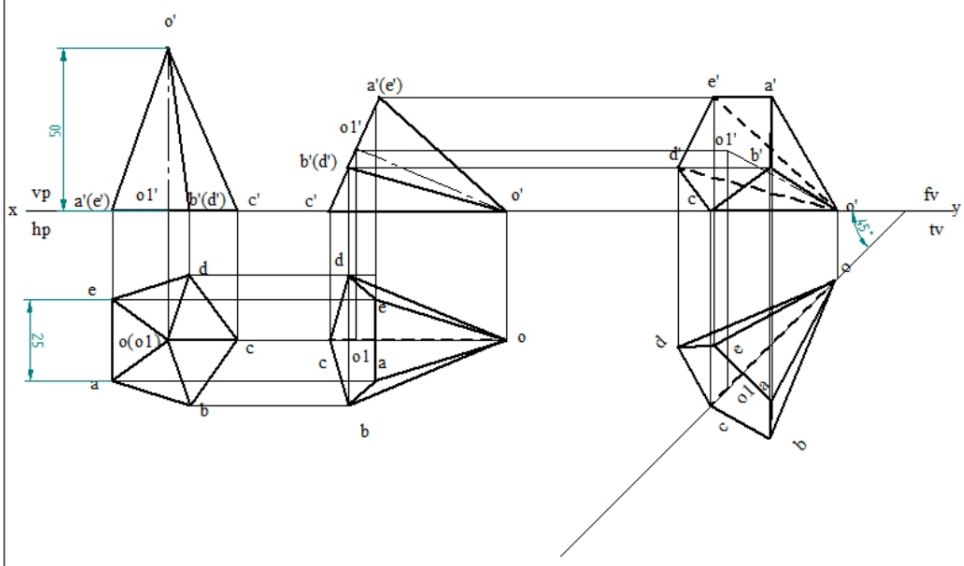

08:00 4G 25%
13.bmp

A tetrahedron of 50 mm sides rests on one of its corners such that the edge containing that corner is inclined to HP at 50 degrees and VP at 30 degrees. Draw the projections.

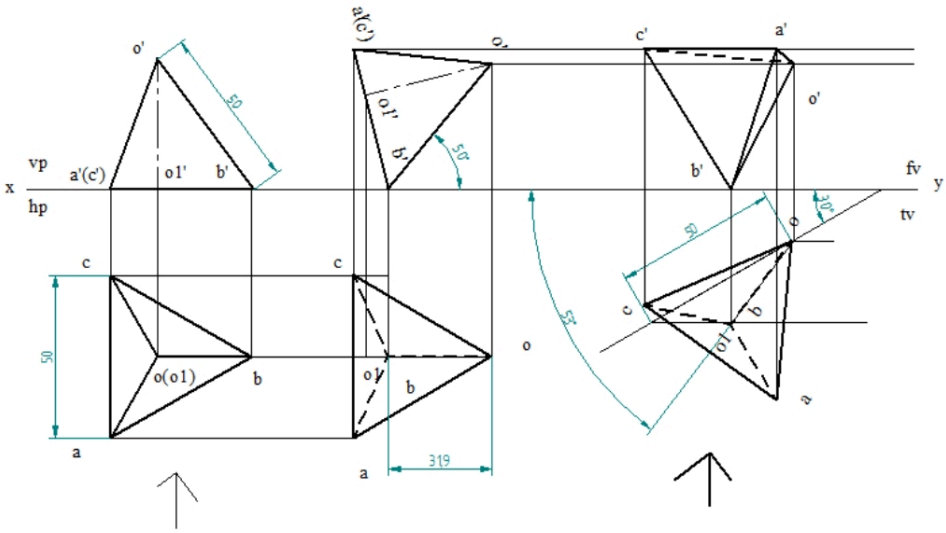

08:00 4G 25%
14.bmp

A hexahedron of 30 mm sides is resting on one of its corners on HP such that one of its solid diagonals is perpendicular to VP. Draw the projections of the solid.

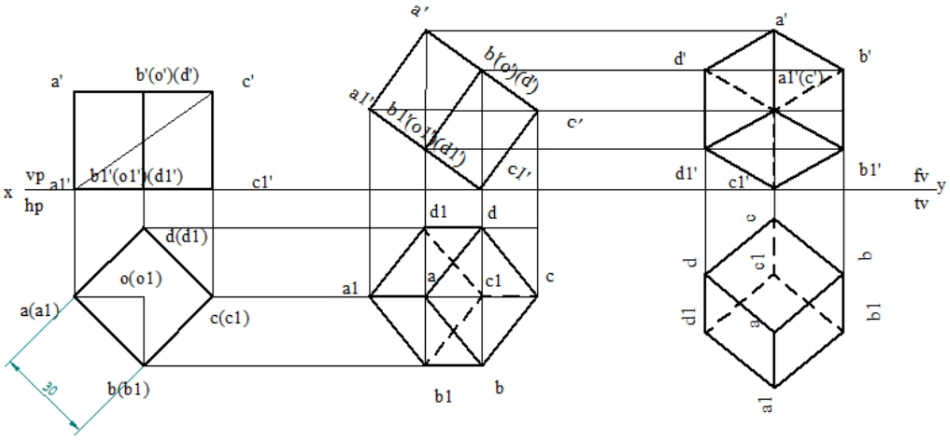

08:01 4G 25%
15.bmp

A cone of base diameter 40 mm and axis length 55 mm is resting on HP on a point on the circumference of its base such that its apex is at 40 mm above HP and its top view of the axis is inclined at 60 degrees to VP. Draw the projections and determine the inclination of the axis with HP when the base is nearer to the observer.

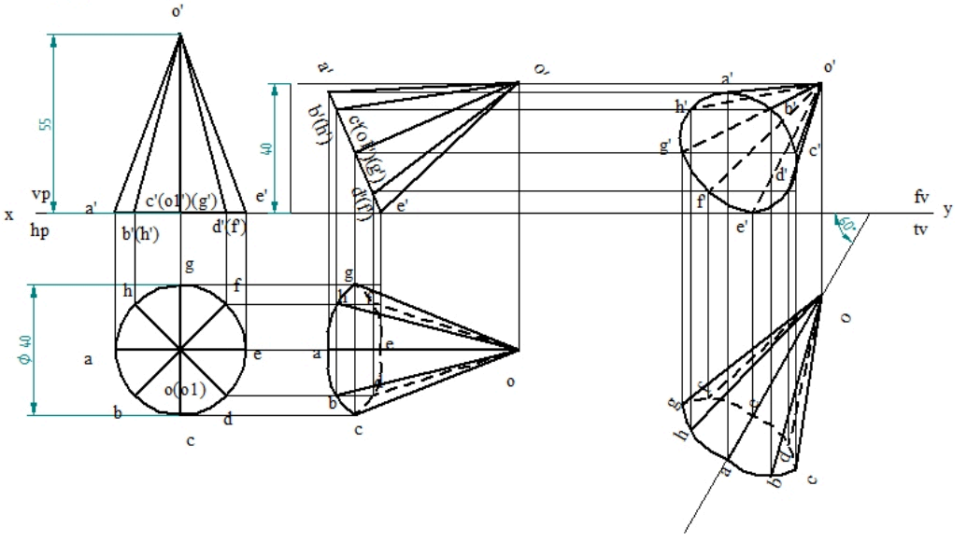

08:02 4G 25%
16.bmp

cone of base diameter 40 mm and axis height 50 mm resting on one of its points on HP such that one its generators is parallel to HP. Draw the projections of the solid when the top view of the axis is inclined at 45 degrees to VP.

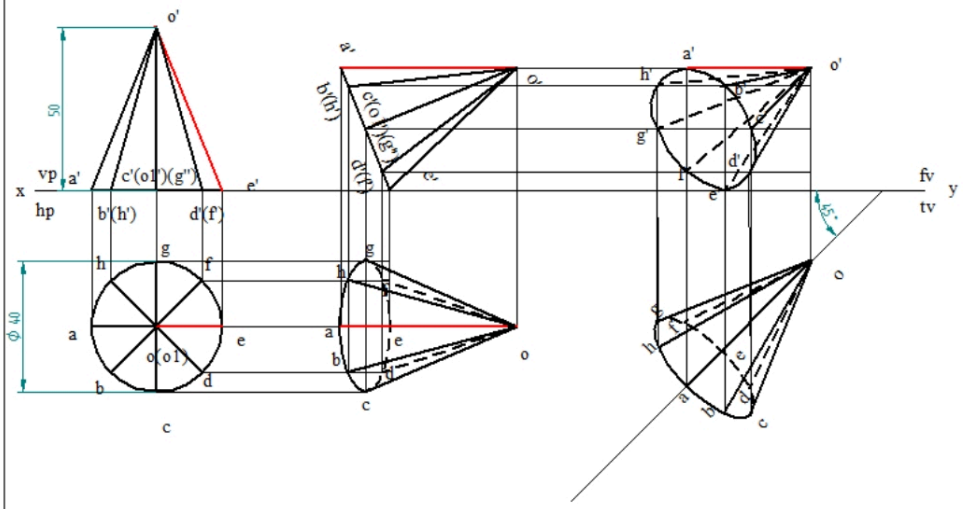

08:02 4G 25%
17.bmp

A square pyramid 30 mm base side and axis 60 mm long, has its slant triangular face on HP and the axis makes an angle of 45 degrees with the VP. Draw its projections assuming the apex to be nearer to VP. Also determine the inclination of the axis with HP.

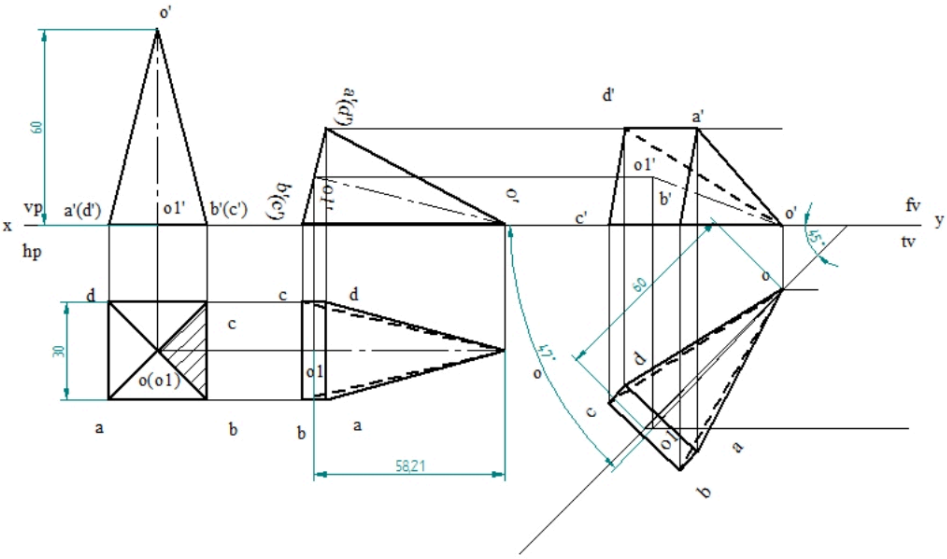

08:02 4G 25%
18.bmp

A pentagonal pyramid of base side 25 mm and axis length 60 mm is resting on one of its base edges on HP. The solid is tilted about its resting edge till its apex is 40 mm above HP. Draw the projections of the pyramid when the axis appears to be inclined to VP at 45 degrees.

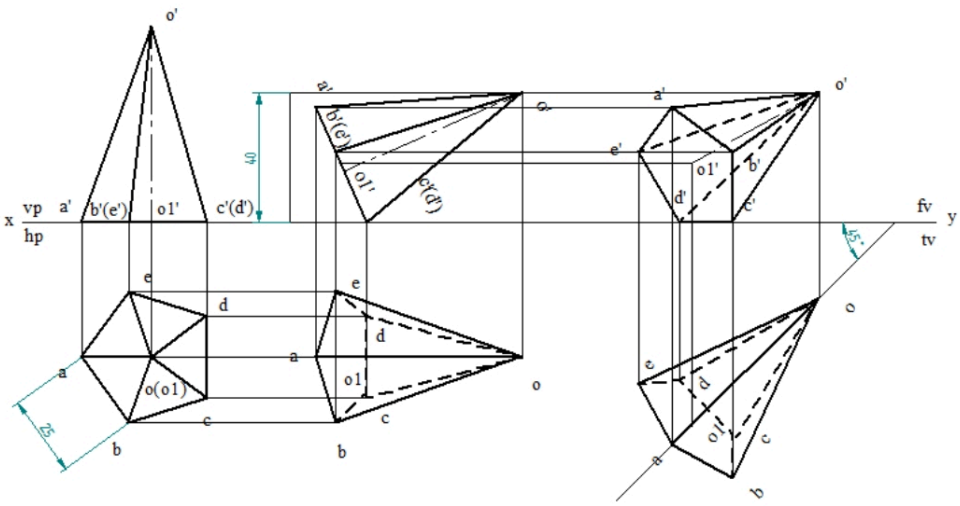

08:03 4G 25%
19.bmp

A hexagonal prism of base side 25 mm and axis length 50 mm rests on HP on one its rectangular faces such that the axis appears to be inclined to VP by 40 degrees. Draw the projections of the prism.

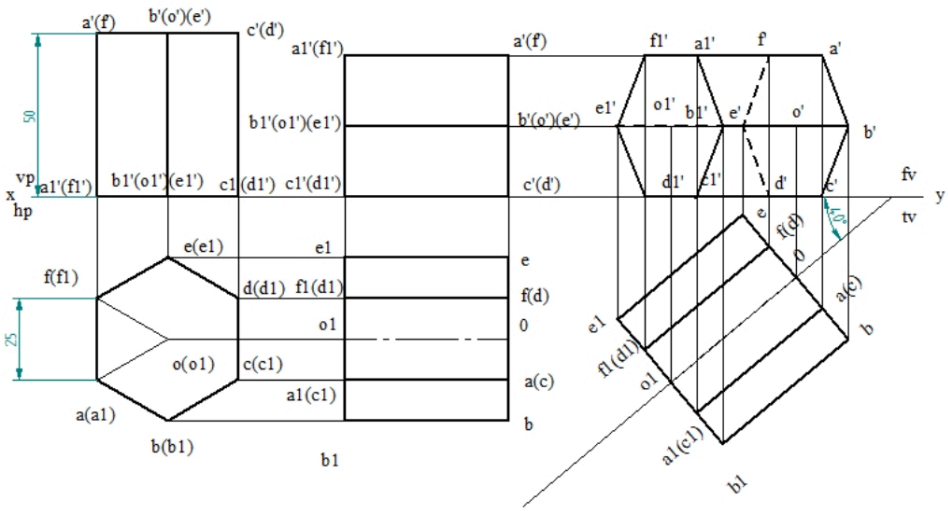

08:03 4G 25%
20.bmp
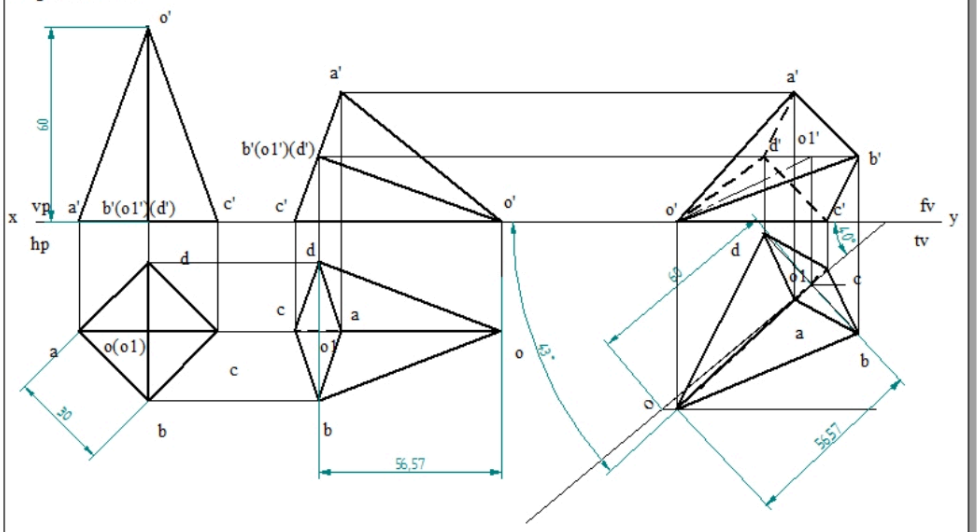
A square pyramid of 30 mm base side and 60 mm axis length rests on HP on one of its slant edges. Draw the projections of the pyramid assuming the apex to be nearer to the observer and the axis of the pyramid is inclined at 40 degrees to VP.