Description

The DW01A has built-in a high precision voltage detection circuit and delay circuit, by detecting the battery voltage、current, realize the battery overcharge, overdischarge, overcurrent protection and so on. Suitable for single section lithium-ion/lithium-polymer rechargeable battery protection circuit.

Features

- High precision voltage detection function:
  1. Overcharge Protection Voltage 4.28V Accuracy: ±50mV
  2. Overcharge Release Voltage 4.08V Accuracy: ±50mV
  3. Overdischarge Protection Voltage 2.40V Accuracy: ±100mV
  4. Overdischarge Release Voltage 3.00V Accuracy: ±100mV
- Discharge overcurrent detection function
  1. Overcurrent Protection Voltage 160mV Accuracy: ±20mV
  2. Short Current Protection Voltage 1.00V Accuracy: ±300mV
- Protection Delay Time
  1. Overcharge Delay Time 80ms(Typ.)
  2. Overdischarge Delay Time 40ms(Typ.)
  3. Discharge overcurrent delay time 10ms(Typ.)
  4. Charge overcurrent delay time 10ms(Typ.)
  5. Load short circuit delay time 300μs(Typ.)
- Charge overcurrent detection voltage -0.150V
- Load detection function
- Allow to charge 0V battery function
- Low power consumption current
  1. Operating state 1.5μA(Typ.), at T_A=25°C
  2. Overdischarge state 0.7μA(Typ.), at T_A=25°C
- The recommended capacity of lithium-ion batteries is 1000mA/h or less
- Operating temperature range：- 40℃~+85℃
- Available in SOT-23-6 Package

Applications

- Protection IC for One-Cell Lithium-Ion /Lithium-Polymer Battery Pack

Typical Application Circuit

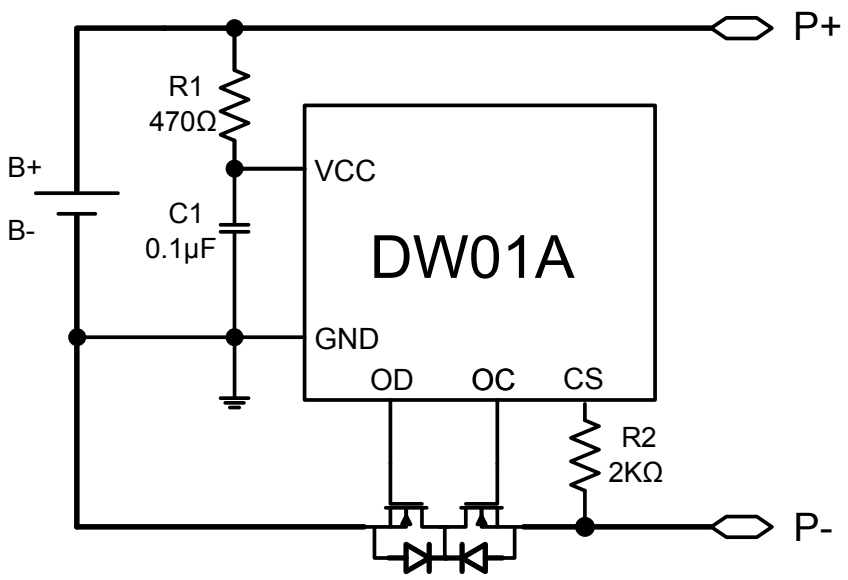

Symbol	Typ.	Rating	Unit
R1	470	470 ~ 1500	Ω
R2	2	1 ~ 3	kΩ
C1	0.1	≥ 0.1	μF

Note：

1. R1, R2 cannot be omitted, and R1 must be greater than or equal to 470 ohms.

Pin Distribution

SOT-23-6

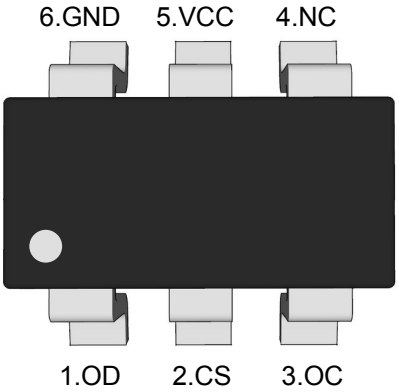

Functional Pin Description

Pin NO.	Symbol	Pin Description
1	OD	MOSFET gate connection pin for discharge control
2	CS	Input pin for current sense, charger detect
3	OC	MOSFET gate connection pin for charge control
4	NC	Not Connected
5	VCC	Power supply, through a resistor (R1)
6	GND	Ground pin

Ordering Information

Orderable Device	Package	Reel (inch)	Package Qty (PCS)	Eco Plan Note	MSL Level	Marking Code
DW01A	SOT-23-6	7	3000	RoHS & Green	MSL3	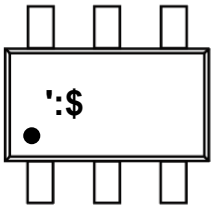

Note:
RoHS：PJ defines "RoHS" to mean semiconductor products that are compliant with the current EU RoHS requirements for all 10 RoHS substances, including the requirement that RoHS substance do not exceed 0.1% by weight in homogeneous materials.
Green：PJ defines "Green" to mean Halogen-Free and Antimony-Free.

Block Diagram

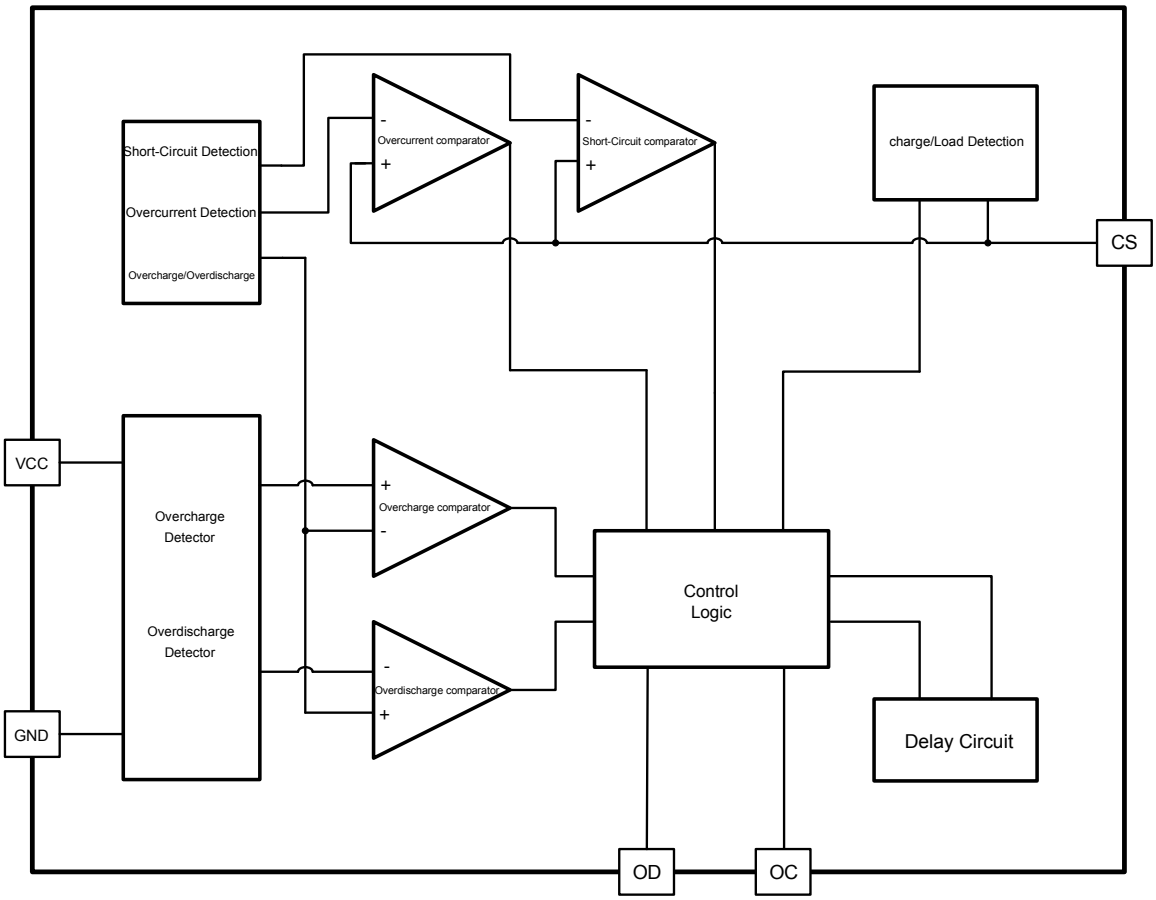

Product Name List

Parameter / Model	Overcharge Protect Voltage	Overcharge Release Voltage	Overdischarge Protect Voltage	Overdischarge release voltage	Overdischarge Current	Short Circuit	Charging Overcurrent	Overcharge Lock	Overdischarge Lock
	VOCP	VOCR	VODP	VODR	VEC1	V_{SHORT}	VCHA	--	--
DW01A	4.280V	4.080V	2.400V	3.000V	0.160V	1.000V	-0.15V	Y	N

Absolute Maximum Ratings

(T_A=25℃ , unless otherwise noted.)

Parameter	Symbol	Rating	Unit
Power voltage	VCC	-0.3 ~ 6	V
CS input pin voltage	VCS	VCC-15 to VCC+0.3	V
Operating Temperature Range	T_{OPR}	-40 ~ 85	°C
Storage Temperature Range	T_{STG}	-55 ~ 125	°C

Note: When the voltage exceeds the absolute maximum rating, the chip may be irreparable damage.

Electrical Characteristics

(T_A=25℃ , unless otherwise noted.)

Parameter		Symbol	Test Conditions	Min.	Typ.	Max.	Unit
Operating Voltage		VCC		1.0	--	5.5	V
Supply Current		I_{VCC}	VCC=3.5V	--	1.5	5.0	μA
Power-Down Current		I_{OPED}	VCC =1.5V	--	0.7	1.5	μA
Overcharge	Protection Voltage	V_{OC}	VCC =3.5→4.5V	4.230	4.280	4.330	V
	Release Voltage	V_{OCR}	VCC =4.5→3.5V	4.030	4.080	4.130	V
	Protection Delay Time	T_{OC}	VCC =3.5→4.5V	--	80	160	mS
Overdischarge	Protection Voltage	V_{OD}	VC5=3.5→2.0V	2.300	2.400	2.500	V
	Release Voltage	V_{ODR}	VCC =2.0→3.5V	2.900	3.000	3.100	V
	Protection Delay Time	T_{OD}	VCC =3.5→2.0V	--	40	80	mS
Discharge Overcurrent	Protection Voltage	V_{EC}	VM-VSS=0→0.20V	0.140	0.160	0.180	V
	Protection Delay Time	T_{EC}	VM-VSS=0→0.20V	--	10	20	mS
Charge Overcurrent	Protection Voltage	V_{CHA}	VSS-VM=0→0.30V	-0.180	-0.150	-0.120	V
	Protection Delay Time	T_{CHA}	VSS-VM=0→0.30V	--	10	20	mS
Short-Circuit	Protection Voltage	V_{SHORT}	VM -VSS=0→1.5V	0.700	1.000	1.300	V
	Protection Delay Time	T_{SHORT}	VM -VSS=0→1.5V	--	300	600	μS
Charger Starting Voltage (Allow Charging to 0V Battery)		V_{0VCH}	Allow charging to 0V battery	1.2	--	--	V

Description of Operation

1. Overcharge Protection

When the battery voltage rises above VOC and lasts for a period of time TOC, the output of OC terminal will be reversed and the charging control MOSFET will be turned off to stop charging, which is called the overcharge state.When the battery voltage drops below the VOCR of overcharge release voltage and lasts for a period of timeTOCR, It will remove the overcharge state and return to normal state.

there are two ways to remove the overcharge state and return to the normal state:

1.1 Disconnect the charger, do not connect the load and VCHA<VCS<VEC. When the battery voltage drops below the VOCR of overcharge release voltage, the overcharge state will be released

1.2 Disconnect the charger and connect the load, if VCS>VEC. At this time, only VCC<VOC is required, and the overcharge state will be released. This function is called load detection function.attention, after detecting overcharge, if the charger is always connected, then even if the cell voltage drops to below VOCR , overcharging state can not be released. through disconnect the charger and VCS> VCHA to remove the overcharge and discharge state.

2. Overdischarge Protection

When the battery voltage drops below VOD and lasts for a period of timeTOD, the output of OD terminal will be reversed and the discharging control MOSFET will be turned off to stop discharging, which is called the overdischarge state.When the battery voltage rises above the VODR of overcharge release voltage and lasts for a period of timeTODR, It will remove the overdischarge state and return to normal state.

There are three ways to release the over-discharge state:

2.1 Connect the charger, if the CS terminal voltage is lower than the charger detection voltage (VCH), when the battery voltage is higher than the overdischarge detection voltage (VOD), the overdischarge state will be released and the charger will return to normal operating state. This function is called the charger detection function.

2.2 Connect the charger. If the CS terminal voltage is higher than the charger detection voltage (VCH), when the battery voltage is higher than the overdischarge discharge voltage (VODR), the overdischarge state will be released and return to normal operating state.

2.3 When disconnect the charger, if the battery voltage restores to higher than the over-discharge discharge voltage (VODR), the over-discharge state is released and the battery returns to normal operating state., that is, the over-discharge self-recovery function is available.

3. Discharge Overcurrent State

In Voltage of the battery are in a state of discharge, V CS increases with the increase of discharge current, when the voltage of the CS is higher than the V EC and lasted for a period of time(T EC) , The chip is thought to have a discharge overcurrent; when the voltage of the CS is higher than the V_{SHORT} and lasted for a period of time(TSHORT), The chip is thought to short circuit . The above two kinds of any state, OD terminal output will be reversed, the discharge control MOSFET will be turned off to stop discharging

As long as the load equivalent resistance be increased or disconnect the load, make the VCS < VEC, can remove discharge overdischarge state, returned to normal state.

4. Charge Overcurrent Detection

Under normal operating state of the battery, in the process of charging, if CS terminal voltage is lower than charging overcurrent detection voltage (VCHA), and the state duration is over the delay time of charge overcurrent detection(T CHA), then close the charging control MOSFET, stop charging, the state is called charge overcurrent state. After charging into the overcurrent detection state, if broken charger to CS terminal voltage higher than over-current detection voltage (V CHA), charge overcurrent state was lifted, return to normal operating condition.

5. Allow to charge 0V battery function

This function is used to have self-discharge to 0V of rechargeable batteries. When the charger voltage connected to the positive (P+) and negative (P-) between the battery higher than the 0V battery charger starting voltage(V 0VCH) , The gate of charging control MOSFET is the potential of VDD, Due to the charger voltage make the voltage between gate and the source of MOSFET higher than threshold voltage, the charge control MOSFET be turn on (OC terminal open), start charging. at this time, the discharge control MOSFET is still shut off, the charging current through its internal parasitic diodes. When the battery voltage is higher than the discharge detection voltage (VOD), IC into the normal operating condition.

Package Outline
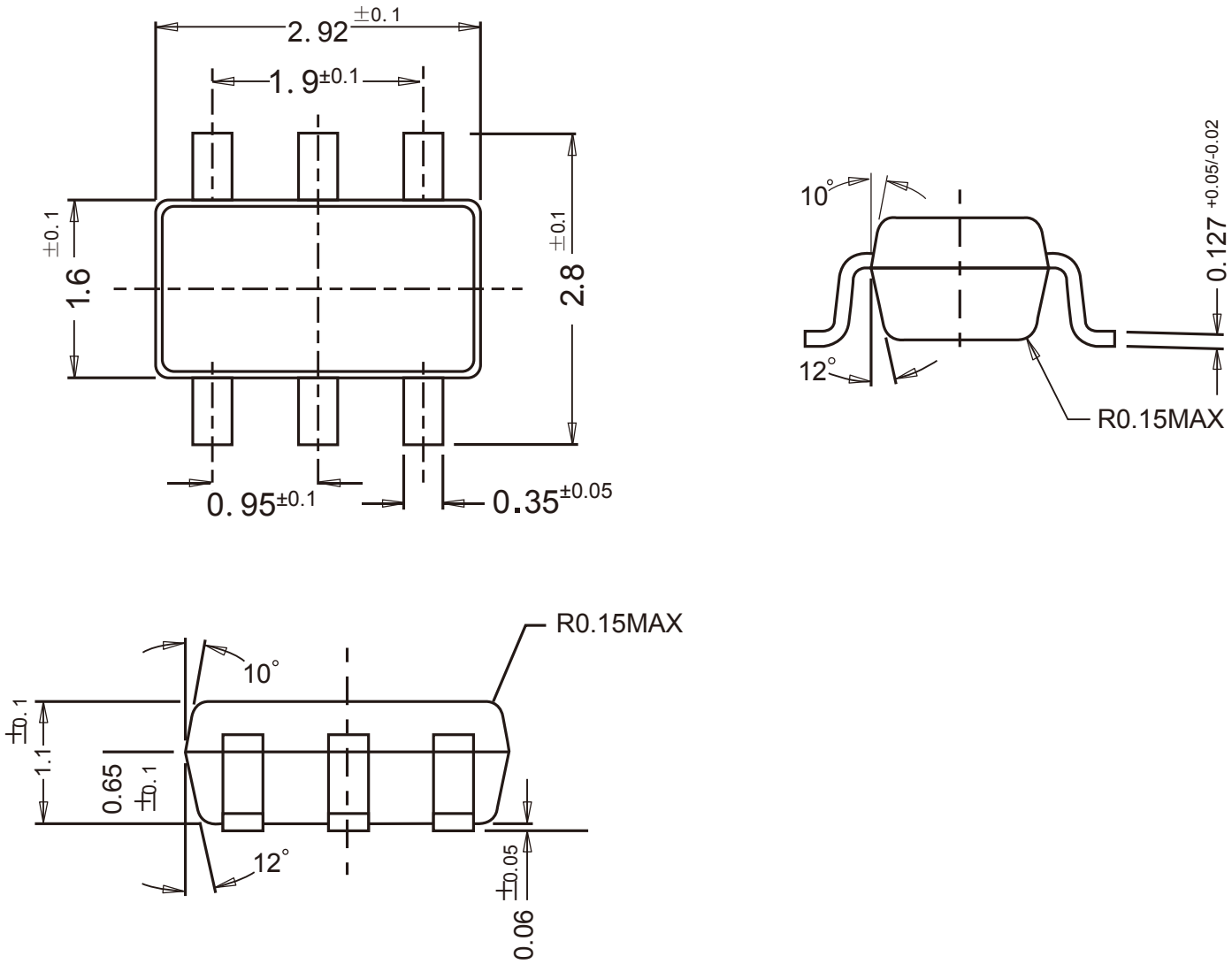
SOT-23-6
Dimensions in mm