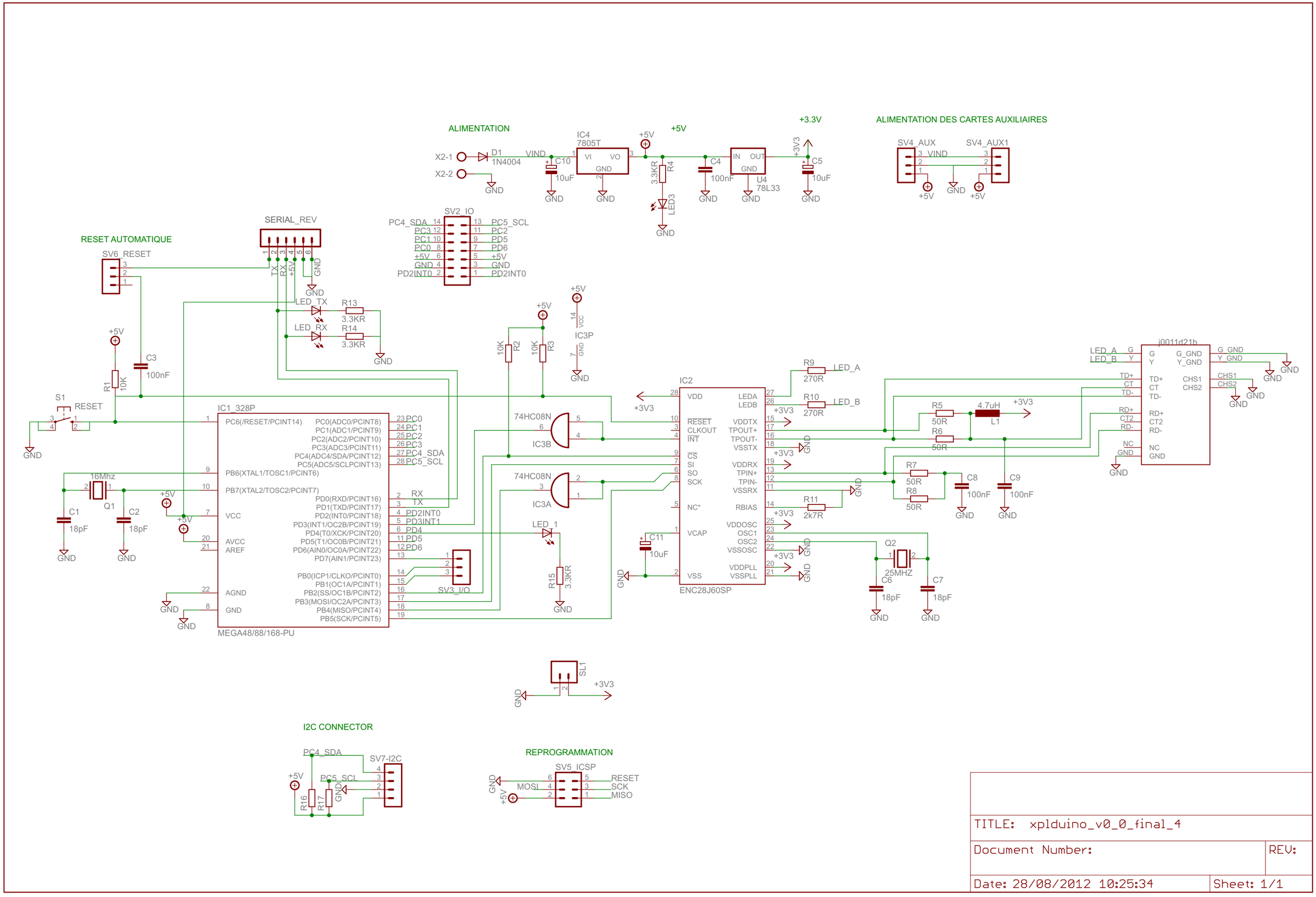

TITLE: xplduino_v0_0_final_4

Document Number:

REV:

Date: 28/08/2012 10:25:34

Sheet: 1/1