POKHARA UNIVERSITY

Level: Bachelor
Programme: BE
Course: Electronic Circuits

Semester: Fall

Year : 2017
Full Marks: 100
Pass Marks: 45
Time : 3hrs.

Candidates are required to give their answers in their own words as far as practicable.

The figures in the margin indicate full marks.

Attempt all the questions.

1. a) What is the effect of removal of emitter bypass capacitor in a CE amplifier circuit? Why cut-off frequencies are also called Half-power frequencies, Justify? 2+4

   b) In the CE amplifier circuit shown in figure below employing emitter feedback. Draw the r_e equivalent circuit and determine: 9

   i. R_{in}
   ii. R_{ac}
   iii. A_v
   iv. A_p
   v. The gains in dB.

   Take $\beta = 100$.

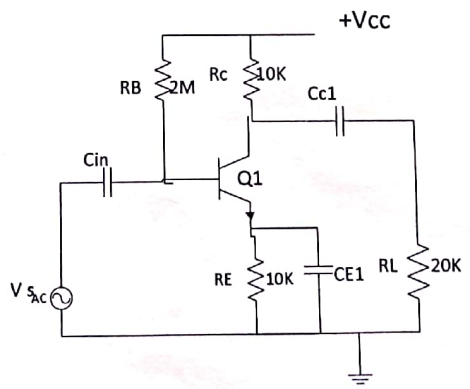

2. a) A multistage amplifier consists of three stages. The voltage gains of three stages are 50, 70 and 90 respectively. i. Find the overall gain in dB ii. if the power gains of the three individual stages are 100, 400 and 800 respectively, what would be the overall power gains in dB. 7

   b) Why power amplifiers are called large signal amplifiers? How cross-over distortion took place in Class-B push-pull amplifier explain 1+7

CamScanner

along with minimization techniques.

3. a) A class-B push-pull amplifier is supplied with V_{cc} = 50v. The signal swings the collector voltage down to V_{min} = 5V. The total dissipation in both transistor is 40 W. Find the total power and the conversion efficiency. 7

b) Discuss the effect of negative feedback on bandwidth of amplifier with necessary frequency response? The overall gain of an amplifier is 200. When negative feedback is applied, the gain reduces to 10. Determine the fraction of the output that is feedback to input. 5+3

4. a) How can you use op-amp as an astable multivibrator? Briefly explain with circuit diagram and waveforms. 5

b) Define common-mode gain and CMRR. Why CMRR should be improved and discuss the idea to improve it? 5

c) For the circuit shown in figure determine voltage gain, input resistance, output resistance and CMRR, if +V = 12V, -V = -12V, $R_c = R_E$ = 1 MΩ and transistor Q1 and Q2 are identical with β_{ac} = 110. Also determine output voltage when V_{in} = 0 and when -1mV. 5

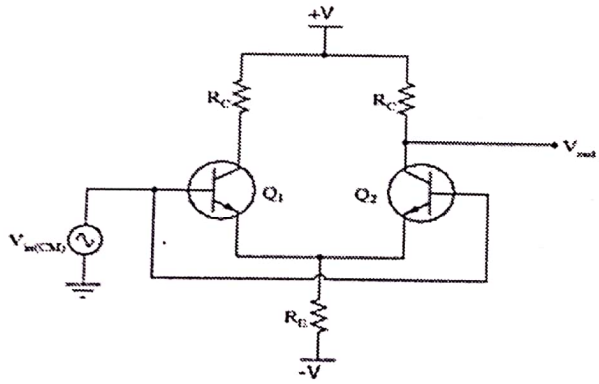

5. a) What are the ideal characteristics of an Op-amp? The differential input op-amp shown below, consists of a base amplifier of infinite gain, find out the difference mode output voltage. 2+5

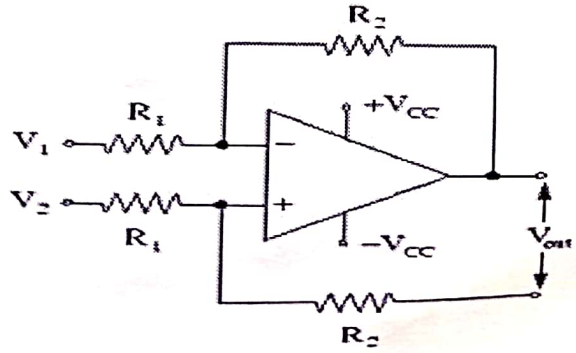

CamScanner

b) What are the necessary conditions for oscillation. Explain the working principle of Wein bridge oscillator. 2+6

6. a) What is voltage regulation? Hence explain how series type transistor regulator maintain the output voltage as constant. 2+6

b) Draw the circuit of logarithmic amplifier and deduce its expression for output voltage. Also discuss the ideas to reduce the temperature effects on it. 1+6

7. Write short notes on: (**Any two**) 2×5

a) Phase shift oscillator

b) Miller Effect

c) Feedback loop stability

CS CamScanner

POKHARA UNIVERSITY

3.

Level: Bachelor
Programme: BE
Course: Electronic Circuits

Semester: Fall

Year : 2017
Full Marks: 100
Pass Marks: 45
Time : 3hrs.

Candidates are required to give their answers in their own words as far as practicable.

The figures in the margin indicate full marks.

Attempt all the questions.

1. a) What is the effect of removal of emitter bypass capacitor in a CE amplifier circuit? Why cut-off frequencies are also called Half-power frequencies, Justify? 2+4

   b) In the CE amplifier circuit shown in figure below employing emitter feedback. Draw the r_e equivalent circuit and determine: 9

   i. R_{in}
   ii. R_{ac}
   iii. A_v
   iv. A_p
   v. The gains in dB.

   Take $\beta = 100$.

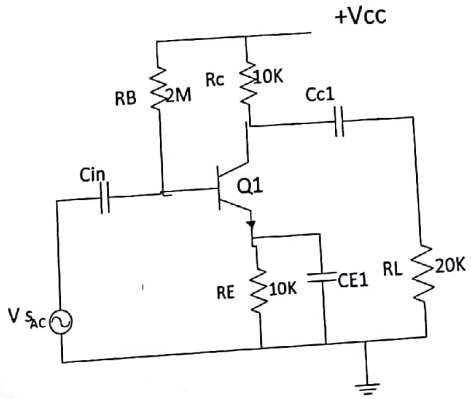

2. a) A multistage amplifier consists of three stages. The voltage gains of three stages are 50, 70 and 90 respectively. i. Find the overall gain in dB ii. if the power gains of the three individual stages are 100, 400 and 800 respectively, what would be the overall power gains in dB. 7

   b) Why power amplifiers are called large signal amplifiers? How cross-over distortion took place in Class-B push-pull amplifier explain 1+7

CamScanner

along with minimization techniques.

3. a) A class-B push-pull amplifier is supplied with V_{cc} = 50v. The signal swings the collector voltage down to V_{min} = 5V. The total dissipation in both transistor is 40 W. Find the total power and the conversion efficiency. 7

b) Discuss the effect of negative feedback on bandwidth of amplifier with necessary frequency response? The overall gain of an amplifier is 200. When negative feedback is applied, the gain reduces to 10. Determine the fraction of the output that is feedback to input. 5+3

4. a) How can you use op-amp as an astable multivibrator? Briefly explain with circuit diagram and waveforms. 5

b) Define common-mode gain and CMRR. Why CMRR should be improved and discuss the idea to improve it? 5

c) For the circuit shown in figure determine voltage gain, input resistance, output resistance and CMRR, if +V = 12V, -V = -12V, $R_c = R_E = 1\ M\Omega$ and transistor Q1 and Q2 are identical with $\beta_{ac} = 110$. Also determine output voltage when $V_{in} = 0$ and when -1mV. 5

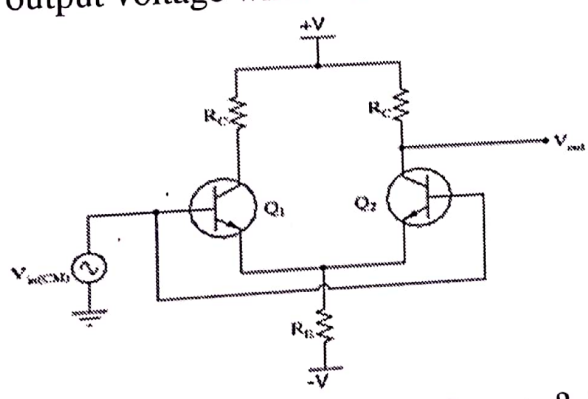

5. a) What are the ideal characteristics of an Op-amp? The differential input op-amp shown below, consists of a base amplifier of infinite gain, find out the difference mode output voltage. 2+5

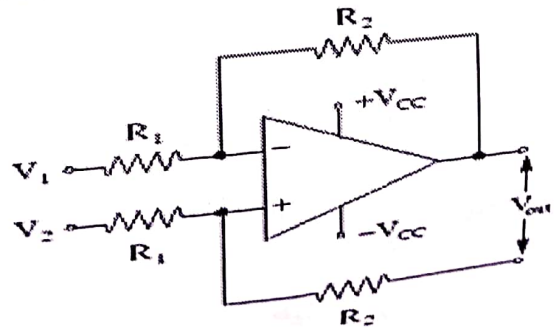

CamScanner

b) What are the necessary conditions for oscillation? Explain the working principle of Wein bridge oscillator. 2+6

6. a) What is voltage regulation? Hence explain how series type transistor regulator maintain the output voltage as constant. 2+6

b) Draw the circuit of logarithmic amplifier and deduce its expression for output voltage. Also discuss the ideas to reduce the temperature effects on it. 1+6

7. Write short notes on: (**Any two**) 2×5

a) Phase shift oscillator

b) Miller Effect

c) Feedback loop stability

CamScanner

POKHARA UNIVERSITY

Level: Bachelor
Programme: BE
Course: Programming in C

Semester: Fall

Year : 2017
Full Marks: 100
Pass Marks: 45
Time : 3hrs.

Candidates are required to give their answers in their own words as far as practicable.

The figures in the margin indicate full marks.

Attempt all the questions.

1. a) What do you mean by programming language? Discuss on machine language, assembly language and high-level language. 7

   b) Define algorithm and flowchart. Draw a flowchart to read 3 numbers from the user and find the smallest one. 8

2. a) What is an operator? Explain the conditional operator with suitable example. 7

   b) What are control statements? Differentiate between while and do while loops with suitable example. 8

3. a) Write a program to print the following pattern. 7

   1
   1 2
   1 2 3

   b) How can you initialize an one dimensional array? Write a program to search an element in one-dimensional array containing five integer elements. 8

4. a) Does a function return multiple values? When and how a function will return single or multiple values, illustrate with suitable examples. 8

   b) How arguments are passed by using call by value and call by references? Explain with examples. 7

5. a) Explain the relationship between arrays and pointers. How can a pointer variable be used to access and modify single-dimensional and multidimensional arrays? 7

   b) How do you define and use double indirection pointers, pointer to array and array of pointers? Give examples codes. 8

6. a) How do you declare and initialize array of structure variables? How is 8

CamScanner

structure different from Union? Give example codes.

b) What are the different modes of opening a file? Write a program to create a file "hello.txt", write data info the fine and finally read the data from the file 7

7. Write short notes on: (**Any two**) 2×5

a) Dynamic Memory Management

b) String Handling Functions

c) Self-referential Structure

CamScanner

POKHARA UNIVERSITY

Level: Bachelor
Programme: BE
Course: Programming in C

Semester: Fall

Year : 2017
Full Marks: 100
Pass Marks: 45
Time : 3hrs.

Candidates are required to give their answers in their own words as far as practicable.

The figures in the margin indicate full marks.

Attempt all the questions.

1. a) What do you mean by programming language? Discuss on machine language, assembly language and high-level language. 7

   b) Define algorithm and flowchart. Draw a flowchart to read 3 numbers from the user and find the smallest one. 8

2. a) What is an operator? Explain the conditional operator with suitable example. 7

   b) What are control statements? Differentiate between while and do while loops with suitable example. 8

3. a) Write a program to print the following pattern. 7

   1
   1 2
   1 2 3

   b) How can you initialize an one dimensional array? Write a program to search an element in one-dimensional array containing five integer elements. 8

4. a) Does a function return multiple values? When and how a function will return single or multiple values, illustrate with suitable examples. 8

   b) How arguments are passed by using call by value and call by references? Explain with examples. 7

5. a) Explain the relationship between arrays and pointers. How can a pointer variable be used to access and modify single-dimensional and multidimensional arrays? 7

   b) How do you define and use double indirection pointers, pointer to array and array of pointers? Give examples codes. 8

6. a) How do you declare and initialize array of structure variables? How is 8

CamScanner

structure different from Union? Give example codes.

b) What are the different modes of opening a file? Write a program to create a file "hello.txt", write data info the fine and finally read the data from the file 7

7. Write short notes on: (**Any two**) 2×

a) Dynamic Memory Management

b) String Handling Functions

c) Self-referential Structure

CamScanner

POKHARA UNIVERSITY

Level: Bachelor
Programme: BE
Course: Basic Electrical Engineering

Semester: Fall

Year : 2017
Full Marks: 100
Pass Marks: 45
Time : 3hrs.

Candidates are required to give their answers in their own words as far as practicable.

The figures in the margin indicate full marks.

Attempt all the questions.

1. a) Throw light on role of electricity in modern society. 5

   b) What are the ideal and non-ideal (practical) sources? Explain each briefly. 5

   c) What is power factor and explain its significances. 5

2. a) Using superposition theorem, find the current through 10Ω resistor of the circuit as shown below. 8

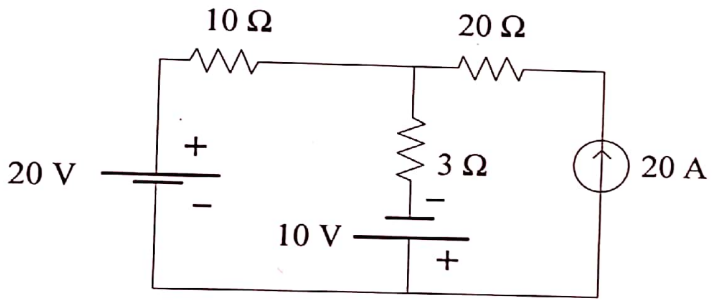

   b) Differentiate between Thevenin's theorem and Norton's theorem. Also find the voltage across 6Ω resistance by using Norton's theorem. 7

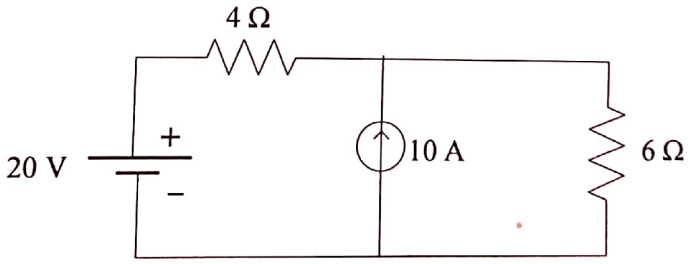

3. a) Compare mesh analysis and nodal analysis. Find node potentials for the given network. Also find the power dissipated in 3 ohm resistor. 8

   b) Write the difference between series resonance and parallel resonance? Show that the bandwidth for the series resonant circuit is the ratio of resonant frequency and quality factor. 7

CamScanner

4. a) What are advantages of AC over DC? Find the average and rms value of the given waveform. Also find the form factor. 2+6

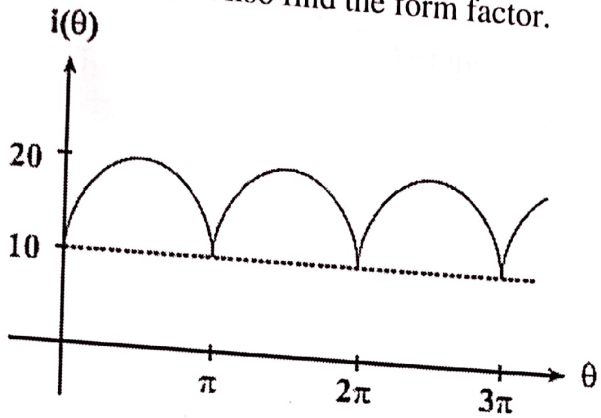

OR

Calculate the mean value and effective value of the wave shown. 8

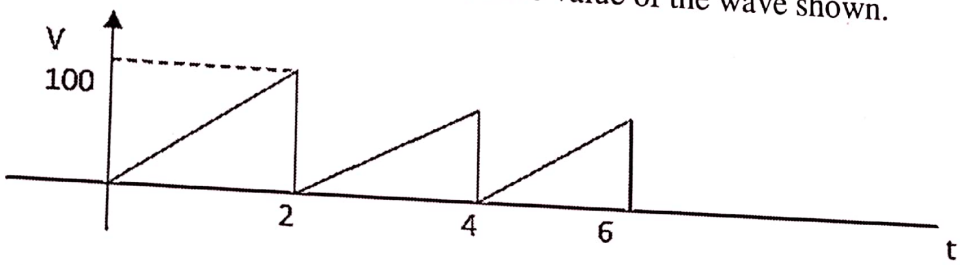

b) For the given circuit determine: 7

i. circuit impedance
ii. supply current and its phase angle
iii. circuit power factor
iv. active, reactive and apparent power.

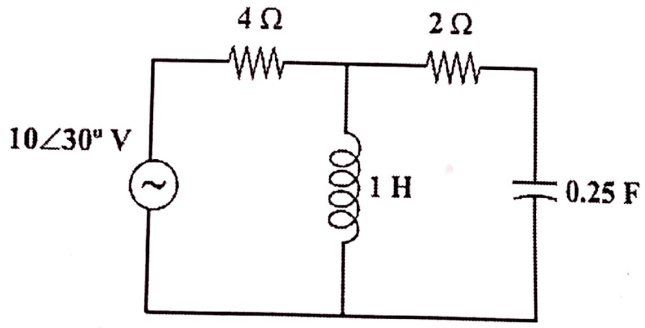

5. a) Three similar coils having impedance of $15<20^0\Omega$ are connected in star to 400v, 3ϕ, 50HZ supply. Calculate: 7

i. line and phase current
ii. Power factor
iii. Total 3ϕ powers

CamScanner

b) Define transformer and deduce the expression for EMF 8

6. a) 25KVA, 1ϕ, 250/500v transformer gives the following results on tests: 7

Open circuit test	200V	1A	70W
Short circuit test	25V	5A	80W

Calculate:

i. Parameters of the transformer

ii. Secondary terminal voltage if it supplies 50A at 0.8 pf lag

OR

A 250 V DC shunt motor takes 8A line current on no load and runs at 1000 rpm. The resistance of the field winding and armature winding are 200Ω and 0.8Ω respectively. If the full load line current is 20A, calculate the full load speed, assuming constant air gap flux.

b) Explain the working principles of $3-\emptyset$ synchronous motor. 8

7. Write short notes on: (**Any two**) 2×5

a) 3ϕ induction motor

b) Three phase power measurement by two wattmeter method

c) Maximum power transfer theorem

CamScanner

Circuit Diagram

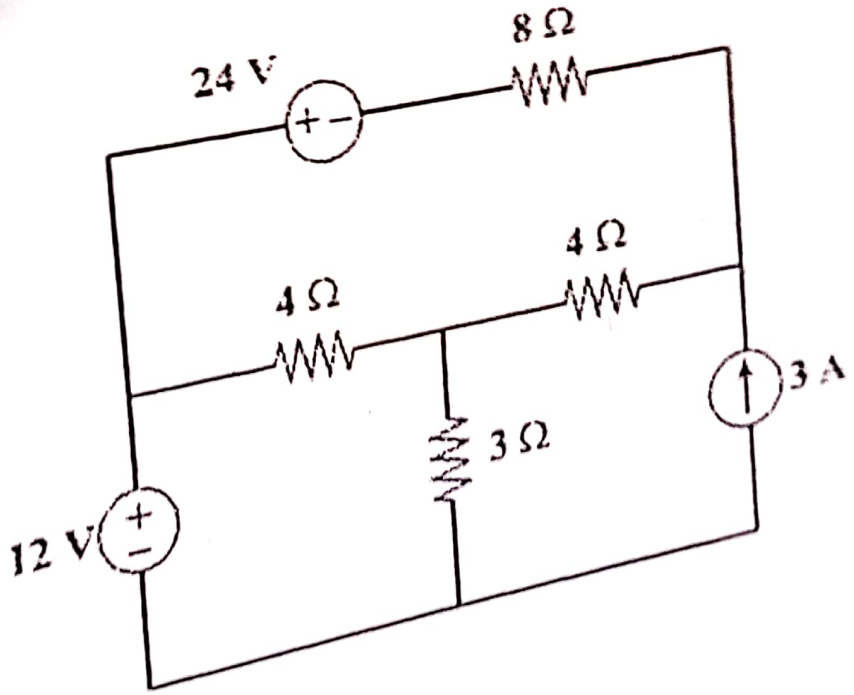

CamScanner

POKHARA UNIVERSITY

Level: Bachelor | Semester: Fall | Year : 2017
Programme: BE | Full Marks: 100
Course: Engineering Mathematics I | Pass Marks: 45
Time : 3hrs.

Candidates are required to give their answers in their own words as far as practicable.

The figures in the margin indicate full marks.

Attempt all the questions.

1.

a) Examine the continuity and derivability at $x = 0$ *and* $x = \frac{\pi}{2}$ of the function $f(x) = \begin{cases} 1 & when \quad (-\infty, 0) \\ 1 + \sin x & when \quad x \in \left[0, \pi/2\right) \\ 2 + (x - \pi/2)^2 & when \quad x \in \left[\pi/2, \infty\right) \end{cases}$ 8

OR

State Leibnitz theorem for successive derivative of the product of two functions. If $y = \sin^{-1} x$ then show that

i. $(1 - x^2)\, y_2 - xy_1 = 0$

ii. $(1 - x^2)\, y_{n+2} - (2n + 1)xy_{n+1} - n^2 y_n = 0.$

b) State and prove Rolle's Theorem. Verify the theorem for the function $f(x) = \log\left(\frac{x^2+ab}{(a+b)x}\right)$ in $[a, b]$ where $0 < a < b$. 7

2. a) A cone is inscribed in a sphere of radius r, prove that it's volume as well as its curved surface is greatest when the altitude is $\frac{4r}{3}$. 8

OR

Find the asymptote to the curve $y^2x^2-3yx^2-5x\,y^2+2x^2+6\,y^2-x-3y+2=0$.

b) Show that $\lim_{x\to\infty}\left(x - x^2 In\left(1 + \frac{1}{x}\right)\right) = \frac{1}{2}$. 7

CamScanner

3. Evaluate ***Any Three*** 3×5

a) $\int \frac{\cos x\, dx}{\sqrt{2\sin^2 x+3\sin x+4}}$

b) $\int \frac{2\sin x+3\cos x}{3\sin x+4c\cos x}dx$

c) $\int_0^1 \frac{\log(1+x)\,dx}{1+x^2}$

d) Evaluate $\int_a^b e^{-x}dx$ by summation method.

4. a) Find the volume of the solid generated by revolving the region in the first quadrant bounded by the parabola $y=x^2$, below by the x-axis and on the right by the line x=2 about y-axis.

b) Find approximate values of $\int_2^5 (x^2+1)dx$ using Simpson's and Trapezoidal rules with $n = 6$. Also compare the results with exact value. 8

5. a) Find the plane through A(1,1,1)and perpendicular to the line of intersection of the planes 2x+y+3z = 5 and 3x+2y+z=7. 8

b) Prove that the four points having position vectors $-\mathbf{i}+2\mathbf{j}-4\mathbf{k}, 2\mathbf{i}-\mathbf{j}+3\mathbf{k}, 6\mathbf{i}+2\mathbf{j}-\mathbf{k}$ and $-12\mathbf{i}-\mathbf{j}-3\mathbf{k}$ are coplanar. 7

6. a) Define conic section by their eccentricity and classify them. Derive standard equation of parabola $y^2 = 4ax$. 8

b) Find the condition that the line $y = mx + c$ may be tangent to the ellipse $\frac{x^2}{a^2}+\frac{y^2}{b^2}=1$. 7

7. Attempt all 4×2

a) Find the vertical asymptotes to the curve $x^2+xy+4y+3=0$

b) Find the radius of curvature at the origin of the curve $x^3+y^3=3axy$

c) Evaluate $\int x^5 e^x dx$

d) Transform to parallel axis through the point $(3,-4)$ the equation $x^2-y^2+2x-3y=0$.

CamScanner

POKHARA UNIVERSITY

Level: Bachelor
Programme: BE
Course: Logic Circuits

Semester: Fall

Year : 2020
Full Marks: 100
Pass Marks: 45
Time : 3hrs.

Candidates are required to give their answers in their own words as far as practicable.

The figures in the margin indicate full marks.

Attempt all the questions.

1. a) Define digital system. Why do you prefer Digital systems against its analog counterpart? Explain. 5

   b) Perform the following subtraction using (r-1)'s complement: 5

      i. $(111001)_2-(11011)_2$

      ii. $(2321)_{10}-(8301)_{10}$

   c) What is weighted and non-weighted code? Why Gray code is called reflected code? 5

2. a) Discuss the significance of NAND& NOR gate in Logic circuit. Prove that NAND and NOR gates are the Universal gate. 7

   b) For the given logic expression: 8

   F(A,B,C,D)=A'B+BD+A'D'+B'D'

      i) Make a truthtable

      ii) Simplify it using K map

      iii) Realize the simplified expression using NOR gate (2 inputs) only.

3. a) Use K-map scheme to obtain the minimized SOP expression for the given function $f(A, B, C, D) = \sum m(1,5,8,12) + d(3, 7, 10, 11, 14, 15)$ and implement the result using NOR gates only. 8

   b) What are parity bits? Design 3-bit parity generator and 4-bit parity checker circuit for even parity. 7

4. a) Design a combinational circuit using PLD device as ROM which is used to find square of 3 bit numbers. 8

   b) Design and implement full adder circuit using decoder. 7

5. a) What are the significance of a flip-flop? Explain J-K flip-flop along with its logic diagram, truth table and excitation table. 7

CamScanner

b) Design synchronous sequential circuit for the given state diagram using T flip-flop. 8

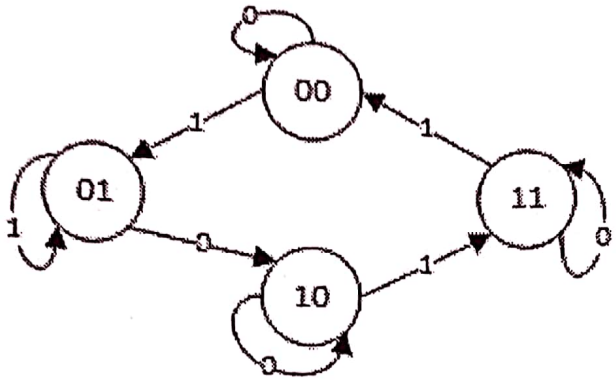

6. a) Design and implement Mod-5 counter using JK flip flop. 8

b) Design an arithmetic circuit implementing given functions. Where A and B are 4-bit binary input lines. 7

S_1	S_0	C_{in}	Output (F)
0	0	0	A
0	0	1	A+1
0	1	0	A+B
0	1	1	A+B+1
1	0	0	$A+\bar{B}$
1	0	1	A-B
1	1	0	A-1
1	1	1	$\bar{A}$

7. Write short notes on: **(Any two)** 2×5

a) Jhonson Counter

b) Tristate Logic

c) 4-Bit Nibble Adder

CamScanner

POKHARA UNIVERSITY

Level: Bachelor
Programme: B E
Course: Programming in C

Semester: Fall

Year : 2020
Full Marks: 100
Pass Marks: 45
Time : 3hrs.

Candidates are required to give their answers in their own words as far as practicable.

The figures in the margin indicate full marks.

Attempt all the questions.

1. a) Explain high level language and low level language. Briefly describe the structure of C program. 7

   b) Why algorithm and flowchart are used in programming? Draw a flowchart to find the sum of numbers between 50 to 500. 8

2. a) What are identifiers in C? Write the rules for naming identifiers. 7

   b) What are control statements? Explain all looping statements in C with examples. 8

3. a) Write a program to display sum of each row for a 3*4 matrix. 7

   b) What are the various String Handling Functions? Write a program to check if a given stringispalindrome or not. 8

4. a) List out the advantage and disadvantage of using recursive function. Write a program to find the sum of numbers from 1 to 50 using recursive function 8

   b) Write a user- defined function to find the sum of elements of m*n matrix and finally returns the sum to the calling function. 7

5. a) How does a function return multiple values using pointer? Illustrate with example. 7

   b) Explain about malloc(),calloc() and realloc() function with suitable example. 8

6. a) Compare union with structure. 7

   b) Why do we need structure? Write a program to input name, address, phone number, salary and department of 500 employees of a company and store them in "Employee.txt" file and display the records of those employees whose department is "Marketing" using concept of 8

CamScanner

structure.

7. Write short notes on: **(Any two)**

a) Call by value and call by reference

b) The switch statement

c) Basic Data type in C

CamScanner

POKHARA UNIVERSITY

Level: Bachelor Semester:Fall Year : 2020
Programme:B E Full Marks: 100
Course:Engineering Mathematic II Pass Marks: 45
Time : 3hrs.

Candidates are required to give their answers in their own words as far as practicable.

The figures in the margin indicate full marks.

Attempt all the questions.

1. a) Find the image of the point (1, 2, 3) in the plane 2x-y+z+3=0. 8

OR

Define shortest distance between two skew lines in space. Find the length and equation of shortest distance between the lines $\frac{x}{2}=\frac{y}{-3}=\frac{z}{1}$ and $\frac{x-2}{3}=\frac{y-1}{-5}=\frac{z+3}{2}$

b) Find the equation of the sphere through the circle $x^2+y^2+z^2=1$, 2x+4y+5z = 6 and touching the plane z = 0. 7

2. a) State and prove Euler's theorem for homogeneous function of two variable. If $u=\tan^{-1}\left(\frac{x^3+y^3}{x+y}\right), x \neq y$, Show that $x\frac{\partial u}{\partial x}+y\frac{\partial u}{\partial y}=\sin 2u$ 8

b) What are the criteria of a function of two independent variables to have extreme values? Find the extreme value of f=xyz subject to x + y + z = 24. 7

3. a) Evaluate $\int_0^2\int_x^2 y^2 \sin xy \, dy\, dx$ by reversing the order of integrations. 8

b) Find the volume in the first octant bounded by coordinate planes, the cylinder $x^2+y^2=4$ and the plane z + y = 3. 7

4. a) Solve: $\frac{dy}{dx}+\frac{1}{x}\sin 2y = x^3.\cos^2 y$ 7

b) Solve $\frac{d^2x}{dy^2}-2\frac{dy}{dx}+y=12\frac{e^x}{x^3}$ 8

CamScanner

5. a) Find the solution of the differential equation: $y''+4y=0$, by using power series method. 7

b) Solve $y''+2y+y=e^{-x}$ $y(0)=-1,\ y'(0)=1$ 8

a) Find Laplace transform of (i) $\frac{\cosh t}{t}$ (ii) $(t-1)\,u(t-1)$ 8

b) Solve the initial value problem: $y''-2y'+y=e^{t}, y(0)=2, y'(0)=-1$, by using Laplace transform. 7

Write short notes on: 1

a) Find the equation of the line passing through the (1, 5, 3) and perpendicular to the plane 2x + 3y + 7z = 0

b) Find the partial derivatives of $f(x,y)=x\cos\left(\frac{x}{y}\right)$.

c) Evaluate $\int_0^1\int_0^2 xy\,dy\,dx$.

d) Find laplace transform of t^n.

CS CamScanner

POKHARA UNIVERSITY

Level: Bachelor
Programme: BE
Course: Basic Electrical Engineering

Semester: Fall

Year : 2018
Full Marks: 100
Pass Marks: 45
Time : 3hrs.

Candidates are required to give their answers in their own words as far as practicable.

The figures in the margin indicate full marks.

Attempt all the questions.

1. a) Explain present Energy scenario and role of electricity in context of Nepal. 7

   b) Obtain the equivalent resistance and use it to find source current for the circuit shown below. 8

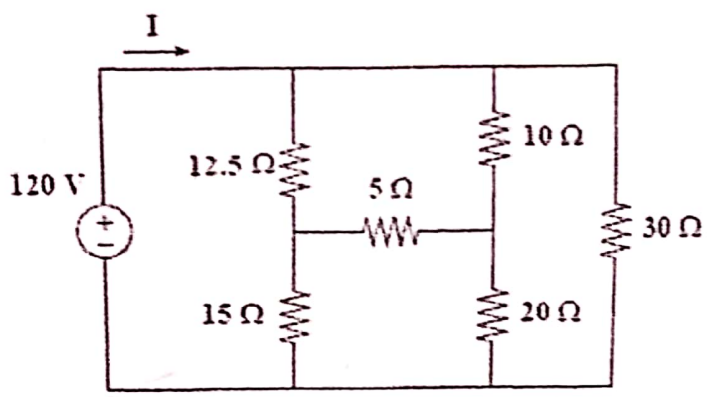

2. a) Explain KCL and KVL. Find the node voltage at each nodes using nodal analysis for the given circuit. 7

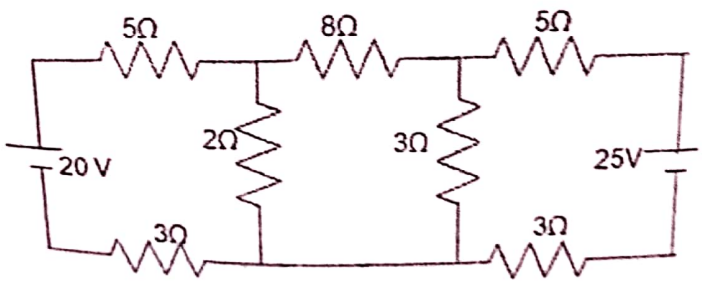

CamScanner

b) Compare Thevenin's theorem with Norton's Theorem. Also find the current across 25Ω resistance by using Norton's theorem. 8

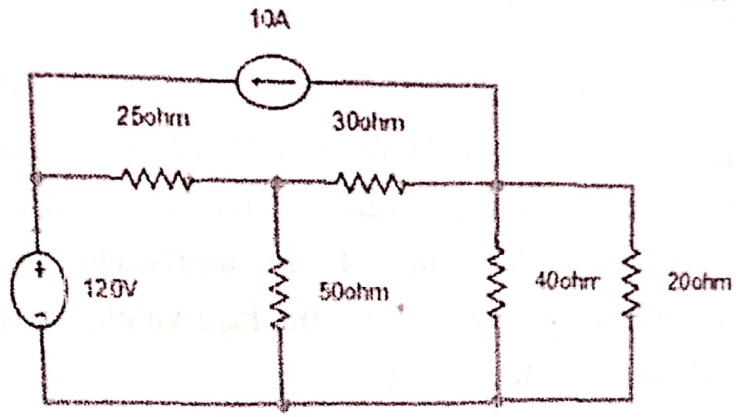

3. a) Calculate the value of R_L& power dissipated such that maximum poweris delivered across load resistor. 8

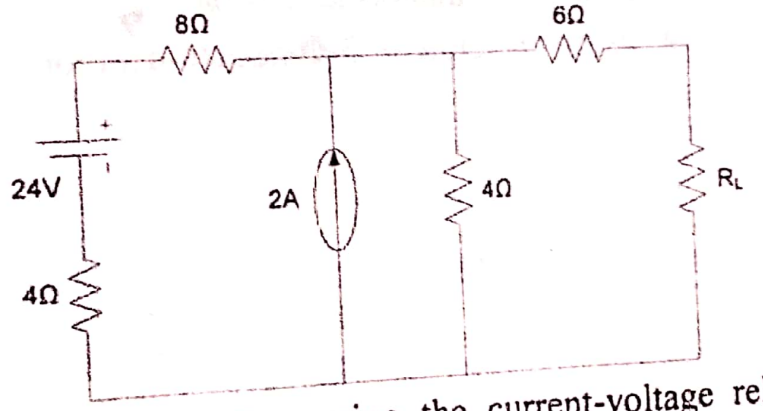

b) What is a phasor? Determine the current-voltage relationship for passive elements in phasor domain as well as time domain. 7

4. a) Two impedances (20+j5) Ω and (30+j8) Ω are connected in series across a 400V, 60Hz supply. Find current, active power, reactive power, apparent power and power factor of the whole circuit. 7

b) Explain resonance in parallel RLC circuit. 8

5. a) Explain how the three phase voltage is generated. Write the advantages of three phase system over single phase. 8

b) Three similar coils, each having a resistance of 100Ω and an inductance of 20mH are connected in i) star ii) delta to a 3-Φ, 50 Hz, with 400V between lines. Calculate: 7

i) Line current and phase current

ii) Active, reactive and apparent power

CamScanner

6. a) *What are generators? Explain the types of excitation systems in separately excited DC generator.* 7

b) A transformer has 600 primary turns and 150 secondary turns. The primary and secondary resistances are 0.25 Ω and 0.01 Ω respectively and corresponding leakage reactance are 1.0Ω and 0.04 Ω respectively. Determine a) the equivalent resistance and reactance referred to primary side b) Equivalent resistance and reactance referred to secondary side. 8

7. Write short notes on: **(Any two)** 2×5

a) Star/Delta transformation

b) Operation of transformer on-load

c) Working principle of 3-Φinduction motor

CamScanner

POKHARA UNIVERSITY

Level: Bachelor
Programme: BE
Course: Electronic Device and Circuits

Semester: Fall

Year : 2016
Full Marks: 100
Pass Marks: 45
Time : 3hrs.

Candidates are required to give their answers in their own words as far as practicable

The figures in the margin indicate full marks. सुगम सेफ्टनरी सप्लायर्स एण्ड फोटोकपी सर्भिस
Attempt all the questions.

बालकुमारी, ललितपुर ९८४५११५१२
NCIT College

a) What is semiconductor material? Explain the importance of semiconductor material on electronic Device with examples. 8

b) If $V_Z = 8V$, $R_S = 100\Omega$, $R_L = 990\Omega$. Find V_o, I_L, I_Z if, 7

i. $V_{in} = 12v$

ii. $V_{in} = 8.5V$

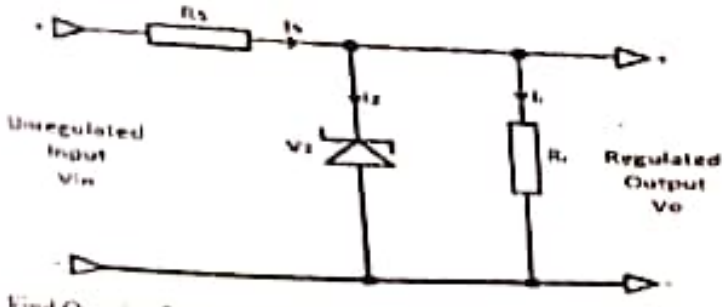

a) Find Q point for the following circuit. Given: 7

$V_{CC} = 16V$
$R_1 = 62K$
$R_2 = 9.1K$
$R_C = 3.9K$
$R_E = 1K$
$\beta = 80$

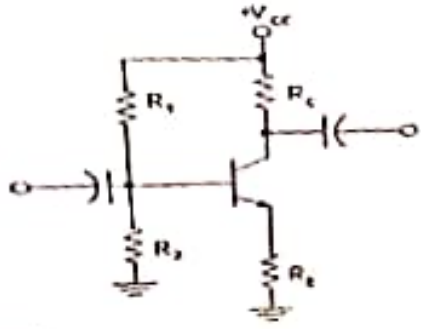

b) Explain BJT as an amplifier. 4

c) Compare CB, CE and CC configurations. 4

a) Define rectification. Explain that the efficiency of full wave rectifier is 8

POKHARA UNIVERSITY

Level: Bachelor
Programme: BE
Course: Electronic Devices and Circuits

Semester: Fall

Year : 2019
Full Marks: 100
Pass Marks: 45
Time : 3hrs.

Candidates are required to give their answers in their own words as far as practicable.
The figures in the margin indicate full marks
Attempt all the questions.

a) Explain the operation of PN diode in case of forward biased and reversed biased. Differentiate between zener breakdown and avalanche breakdown. 7

b) For the circuit shown in figure below find 8

i. The output voltage
ii. Voltage drop across series resistance
iii. Current through zener diode

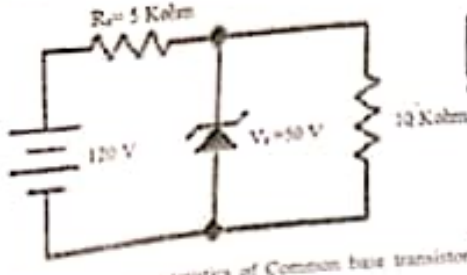

a) Explain the output characteristics of Common base transistor. Also derive the relationship between α, β, and γ. 7

b) For the BJT common emitter circuit shown below, determine the operating point and locate it in the load line. Assume $\beta = 100$. 8

मुख्य जिल्ला अध्ययन एवं सेवाको लागि
काठमाडौं, नेपालमा रहेको
NCIT College

3. a) Explain the operation of Centre-Tap full wave rectifier. Find its efficiency, ripple factor and PIV. 8

b) Draw the output waveform (assume silicon diode). 2

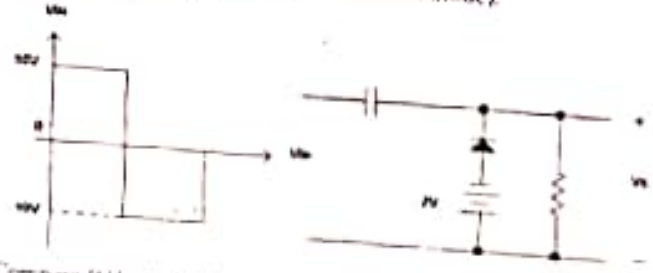

4. a) Compare BJT and FET. Explain how pinch-off occurs in JFET 7

b) Find the overall voltage gain of cascaded transistor amplifier as shown in figure below. Given $r_{e1}=r_{e2}=25\Omega$ and $\beta 1=\beta 2=110$ 8

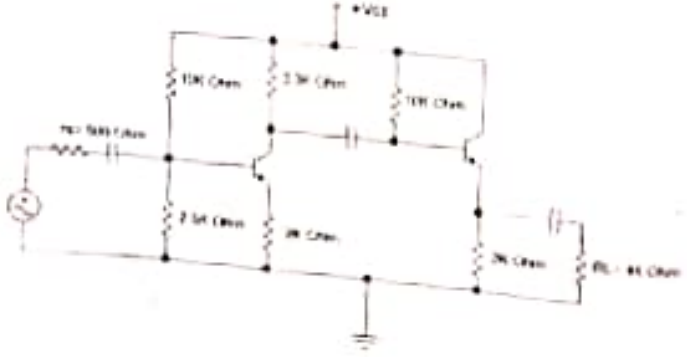

5. a) What do you mean by class A amplifier. Find the maximum efficiency of class A amplifier with resistive load. 2+6

b) What do you mean by feedback amplifier? Show that negative feedback improves the stability of an amplifier. 2+5

6. a) What are the conditions for oscillations? Draw a Wien bridge Oscillator and explain its operation. 5

b) What do you mean by Operational Amplifier? Compare the characteristics of Ideal and practical Operational Amplifiers. 5

c) Design an Operational Amplifier circuit to produce the following Output. 5

$V_0 = 3V_1 + 2V_2 - 0.5V_3$. Where V_1, V_2, V_3 are inputs and V_0 is an output.

7. Write short notes on: **(Any two)** 2+5

a) Effect of Bypass Capacitor on voltage gain of CE amplifier

b) Darlington Pair

c) Cross over Distortion

POKHARA UNIVERSITY

Level: Bachelor | Semester: Spring | Year : 2017
Programme: BE | Full Marks: 100
Course: Electronics Devices and Circuits | Pass Marks: 45
Time : 3hrs.

Candidates are required to give their answers in their own words as far as practicable.

The figures in the margin indicate full marks.

Attempt all the questions.

a) Define Fermi-level in an intrinsic semiconductor, hence prove that 'the Fermi level lies mid-way between the conduction and valence bands. 7

b) Discuss the formation of Volt-amp characteristic of P-N junction. What happens when a P-N junction is biased in 8

i. forward direction

ii. backward direction.

a) Can transistor action be achieved by connecting two back to back diodes? If not, explain the reason. Explain in detail NPN transistor ie. its structure (doping area, width etc.) and its action. What are α and β? What is their relationship? 8

b) Draw the circuit diagram to obtain the characteristics of BJT in CE configuration. Draw output characteristics curves and indicate the different regions of operation. 7

a) A sinusoidal voltage of 40V and frequency 50Hz is applied to a half-wave rectifier. $R_L = 200\Omega$, $V_\gamma = 0$, $R_f = 20\Omega$, $R_r = \infty$. Find V_{dc}, I_{dc}, I_{max}, I_{rms}, P_{dc}, η, ripple factor and percentage regulation. 8

b) What is the necessity of having filters in power supplies? Explain with diagram of how R-C filter improves the output of rectifier. 7

a) Why JFET is called voltage controlled device? Draw the structure and output characteristics of P-channel JFET. Indicate different regions in the curve and explain its significance. 8

b) For the given CE amplifier, find the following using r_e model 7

i. input impedance

ii. output impedance

iii. voltage gain

(Assume $\beta = 90$, $V_{CC} = +19V$)

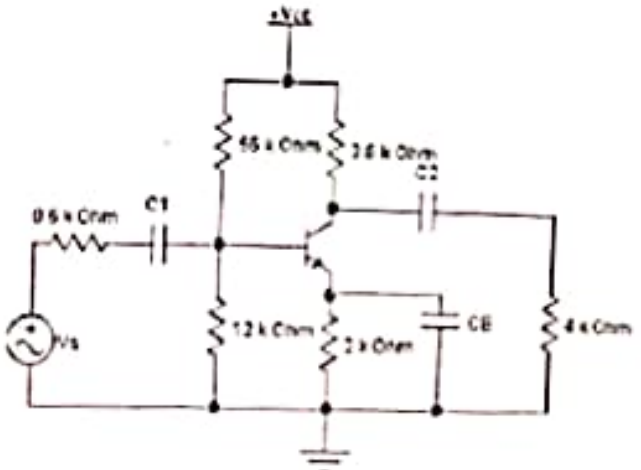

5. a) Briefly explain, the basic principle behind push-pull amplifiers which class of amplifiers are most likely to experience cross-over distortion explain with wave forms. What are the techniques to minimize it? 7

b) What are multi-stage amplifiers? Which configuration of amplifier is chosen in the intermediate stage and why? Derive the equation for the overall voltage of multistage amplifier in terms of the individual voltage gains? 8

6. a) State Ideal characteristics of op-amp? Explain the operation of Wein bridge oscillator and derive its frequency of oscillation 8

b) Design an adder circuit using op-amp to obtain the output having expression as $V_0 = -(3V_1 + 15V_2 + 120V_3)$. 7

7. Write short notes on: **(Any two)** 2×5

a) Diffusion current

b) Small-signal model of FET

c) Effect of negative feedback in bandwidth

पुल्चोक इञ्जिनियरिङ्ग कलेज
ललितपुर, नेपाल
NGIT College

POKHARA UNIVERSITY

Level: Bachelor
Programme: BE
Course: Electronics Device and Circuits

Semester: Fall

Year : 2018
Full Marks: 100
Pass Marks: 45
Time : 3hrs.

Candidates are required to give their answers in their own words as far as practicable.

The figures in the margin indicate full marks

Attempt all the questions.

1. a) Explain the importance of Semiconductor materials on modern world 7

b) Explain the forward and reverse biasing of PN Junction diode with circuit diagram. 8

If V_s=8v, Rs =100Ω, R_L = 990Ω

Find V_o, I_L, I_Z, if a) V_o = 12 V b) V_o = 8.5V

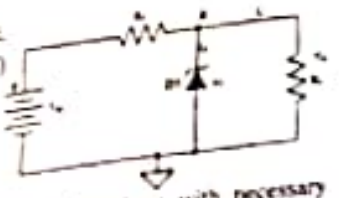

2. a) Explain the current flow mechanism in transistor with necessary diagram 7

b) Draw the circuit diagram to obtain the characteristic of BJT in CE configuration. Draw output characteristics and indicate different regions of operation. 8

3. a) For the circuit given below 7

i. Draw DC load line

ii. Find Q point

(Assume β=90, V_{cc} = +15 V)

POKHARA UNIVERSITY

Level: Bachelor
Programme: BE
Course: Electronic Device and Circuits

Semester: Spring

Year : 2015
Full Marks: 100
Pass Marks: 45
Time : 3hrs.

Candidates are required to give their answers in their own words as far as practicable.

The figures in the margin indicate full marks.

Attempt all the questions.

a) What happens when a forward biased diode is suddenly reverse biased? Explain with necessary diagrams. 5

b) What do you mean by dynamic resistance of diode? Show that dynamic resistance of diode $r_D = \eta V_T / I$. 5

c) Determine the range of values of Vin that will maintain the zener diode in the "ON" state. Also find the maximum power that can be dissipated to the diode. 5

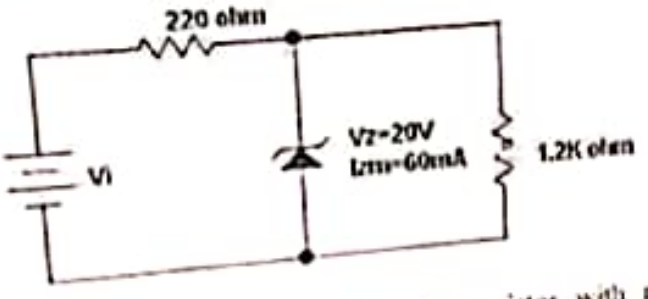

2. a) Explain the working principle of NPN transistor with necessary diagram. Show that $I_C = \beta I_B + (\beta+1) I_{CBO}$. 8

b) For the circuits shown below, draw the dc load line and find the operating point. Also find the stability S of the circuit. (Assume silicon transistor with $\beta = 100$) 7

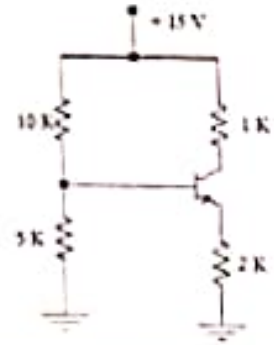

3. a) Calculate output voltage and PIV rating of each diode for the circuit shown, with input signal Vin=100sinwt. 8

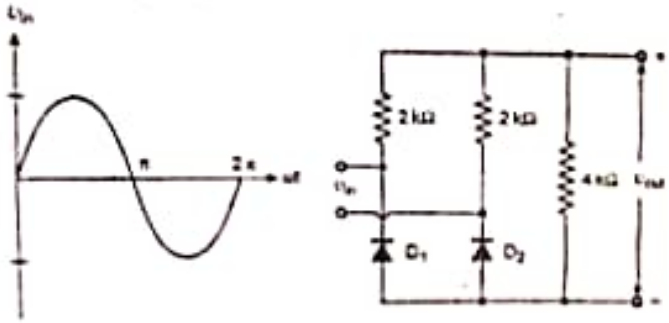

b) What is pinch-off voltage? Prove that conductance of JFET is proportional to square root of product of I_{DSS} and I_{DSS}. 7

4. a) Determine the expression for Ai, Zi, Av & Yo for the two port transistor network shown below in terms of h parameters. 8

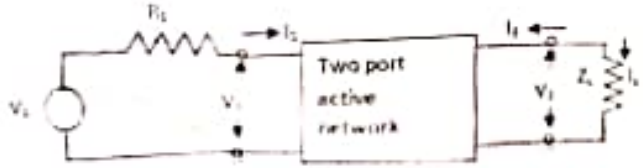

b) Find V_L/V_S in the circuit below: ($\beta 1=\beta 2=100$, $r_{e1}=r_{e2}=25\ \Omega$). 7

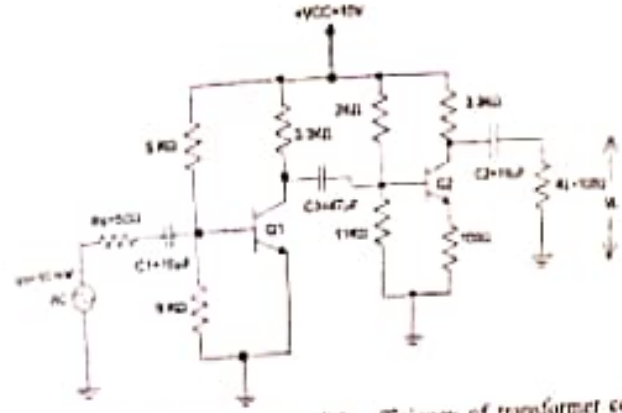

a) Show that the maximum possible efficiency of transformer coupled load class A amplifier is 50% with necessary circuit diagram and derivation 7

b) Derive closed loop gain expression for feedback amplifier and explain the characteristics of negative feedback amplifier 8

5. a) What are the essential condition for oscillation? Explain Wein bridge oscillator with circuit Diagram. Derive the expression for the frequency of oscillator? 8

b) Write the salient feature of operational amplifier. Design a summing operational amplifier circuit that will produce an output voltage $V_{out}=-4V_1-V_2+0.1V_3$ 7

6. Write short notes on: (Any two) 2×5

a) DMOSFET

b) Emitter follower

c) Full wave rectifier

POKHARA UNIVERSITY

Level: Bachelor Semester:Spring Year : 2019
Programme:BE Full Marks: 100
Course: Electronic Devices and Circuits Pass Marks: 45
Time : 3hrs.

Candidates are required to give their answers in their own words as far as practicable.

The figures in the margin indicate full marks.

Attempt all the questions.

a) What do you mean by dynamic resistance of a diode? Derive an expression for dynamic resistance of a diode. 8

b) Calculate the current through load resistor and Zener diodes. 7

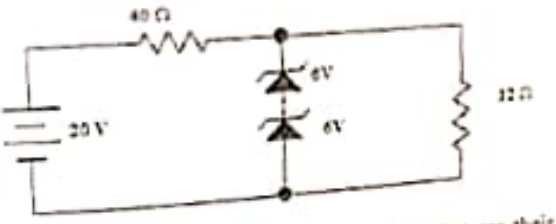

a) What is bipolar junction transistor? and what are their applications. 8

b) Explain the operation of NPN transistor with its current direction 7

Find Q-point or operating point for the circuit given below. Assume $\beta = 100$ and draw the dc load line. 7

a) Sketch the output waveform for the circuit shown below.

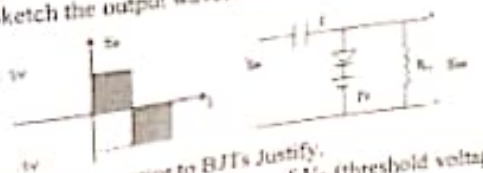

4

b) FETs are superior to BJTs Justify. 4

Advantages of lower values of V_T (threshold voltage) in E-MOSFET Explain.

4. a) For the RC -coupled transistor amplifiers of figure given below: 7

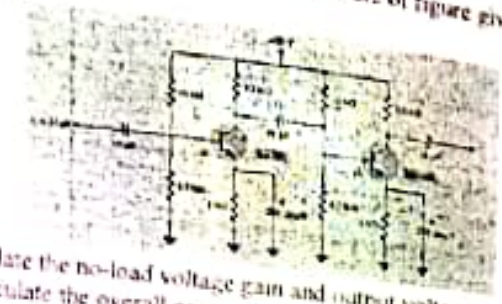

i) Calculate the no-load voltage gain and output voltage
ii) Calculate the overall gain and output voltage if a 4.7 k-Ohms load is applied to the second stage, and compare to the results of part (i)
iii) Calculate the input impedance of the first stage and the output impedance of the second stage.

b) Find A_{vs}, A_v, Z_{in}, Z_{o} of following circuit. Diagram using h-parameter. 8

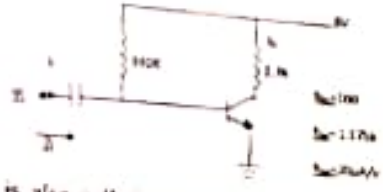

5. a) "Large signal amplifier is also called power amplifier" explain. For a class B amplifier providing a 10 V peak signal to the 20Ω load and a power supply of V_{cc}=20V. Find input and output power and efficiency of that amplifier. 8

b) A negative feedback of 0.2% is applied to an amplifier with gain of 60 dB. Calculate percentage change in the overall voltage gain of the feedback amplifier if the internal amplifier is subjected to gain of reduction of 15%. 7

6. a) Calculate the gain of inverting amplifier using an op-amp. Show how it can be used to build an adder circuit. Explain with necessary diagram and expression 7

b) Explain Barkhausen criteria of oscillation. Design Wein-bridge oscillator to operate at a frequency of 25KHz. 8

7. Write [illegible] on (Any two) 2×5

a) Super [illegible]
b) Cry[illegible] Oscillator
c) Propert[illegible] linear device

POKHARA UNIVERSITY

Level: Bachelor | Semester: Spring | Year: 2021
Programme: BE | Full Marks: 100
Course: Electronic Devices and Circuit | Pass Marks: 45
Time: 3 hrs.

Candidates are required to give their answers in their own words as far as practicable.

The figures in the margin indicate full marks.

Attempt all the questions.

1. a) Describe in your own words the conditions established by forward- and reverse-bias conditions on a p–n junction diode and how the resulting current is affected. 7

b) Draw the complete IV characteristic curve of Zener diode showing the value of required parameters. 8

A Zener regulator consist of two Zener diode with 6 V Zener voltage each, with variable load resistance from 200 to 1 KΩ. Given that below V_{in} = 15 V and R = 100 Ω.

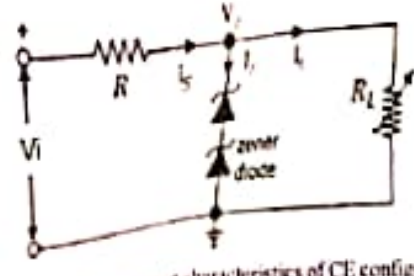

2. a) Describe the input and output characteristics of CE configuration of BJT. Also explain why CE configuration is used over other configuration. 7

POKHARA UNIVERSITY

Level: Bachelor
Programme: BE
Course: Electronic Devices and Circuits

Semester: Fall

Year : 2017
Full Marks: 100
Pass Marks: 45
Time : 3hrs.

Candidates are required to give their answers in their own words as far as practicable.

The figures in the margin indicate full marks.

Attempt all the questions.

Show that $\beta_{eff} = \beta^2$ for darlington pair amplifier. 8

What do you mean by cross over distortion? How can you overcome this, explain it. 7

For Emitter follower configuration find the expression of input impedance and voltage gain current gain. 7

What do you mean by Zener diode? Explain its application. 8

An RC-coupled amplifier has a mid-frequency gain of 200 and frequency response from 100HZ to 200HZ. A negative feedback network with β=0.02 is kept into the amplifier circuit. Find the new system performance. 8

"Positive feedback amplifier as oscillator" explain this statement. 7

Why do we need small signal low frequency model of BJT? Describe it. 5

Design an operational amplifier circuit using two inverting configuration circuit to produce the output of V0= -0V1+5V2+0.5V3-20V4. 5

Make comparison between BJT and JFET. 5

Design a self-bias circuit for an NPN silicon transistor with h_{fe} = 100 and V_{BE} = 0.6V. The desired Q-point is V_{CE} = 5V and I_C = 1mA and S≤ 8. Assume V_{CC} = 10V. 8

) With suitable diagram describe the working principle of NPN transistor. 7

) Describe the operation of bridge rectifier. 5

) With suitable diagram describe working principle of clamping circuit. 5

) EMOSFET works only in Enhancement mode, support this statement. 5

Write short notes on: **(Any two)** 2x5

) Junction breakdown

) Multistage amplifier

) Power dissipation and heat sinks

EDC-2021 SP

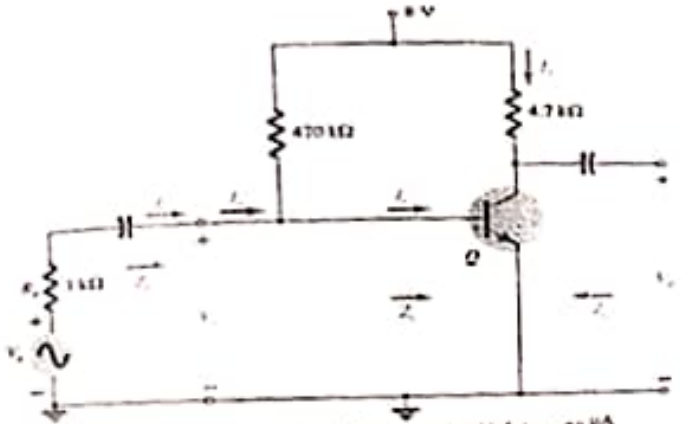

$Q: h_{fe} = 110, h_{ie} = 1.6\ k\Omega, h_{re} = 2 \times 10^{-4}, h_{oe} = 20\ \frac{\mu A}{V}$

5. a) What are multistage amplifiers? Derive the voltage gain current gain, input and output impedance, overall voltage gains for Common Emitter unbypass configuration. 8

b) Derive the efficiency for transformer coupled class A amplifier with necessary diagram and waveforms. List out its draw back. 7

6. a) Explain the working principle of any one multivibrator using operational amplifier with required circuit diagram and waveforms 7

b) Design an operational amplifier circuit that produce an output $V_o = 8V_1 + 10V_2 + 0.8V_3 - 4V_4$ 8

7. Write short notes on: **(Any two)** 2×5

a. Importance of positive feedback on oscillation

b. Virtual ground Stability factor

c. Importance of cascading

double of the half wave rectifier.

b) Draw the wave form of voltage across R_L. Assume Vin = 10 sin ωt Volts. Also explain the operation to support your waveform. 7

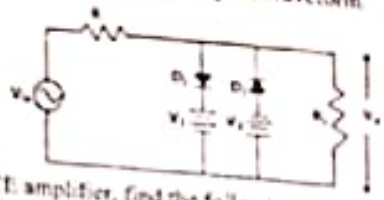

4. a) For the given CE amplifier, find the following using r_e model

i. input impedance

ii. output impedance

iii. voltage gain 8

(Assume β = 90, Vcc = +19V)

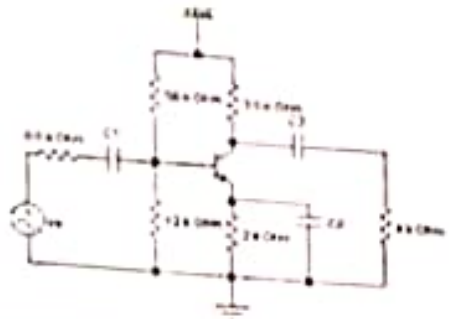

b) Darlington-pair amplifier is called Super beta why? Derive the necessary expression for it. 7

5. a) Derive efficiency of Transformer coupled Class A amplifier? Explain cross over distortion in class B push pull amplifier 8

b) Derive the equation of gain for positive and negative feedback. Explain the effect of negative feedback configuration in amplifier characteristics. 7

6. a) State Ideal characteristics of op-amp? Derive closed loop gain of inverting, non inverting and integrator amplifier? 8

b) Calculate the component values of Wein Bridge Oscillator to be used in oscillator to vary frequency from 100 Hz to 10 kHz in two stages. 7

7. Write short notes on **(Any two)** 2×5

a) Slew Rate and CMRR

b) Clamping and Clipping Circuit

c) JFET Parameters

POKHARA UNIVERSITY

Level: Bachelor
Programme: BE
Course: Electronic Devices and Circuits

Semester: Spring

Year : 2016
Full Marks: 100
Pass Marks: 45
Time : 3hrs

Candidates are required to give their answers in their own words as far as practicable.

The figures in the margin indicate full marks.

Attempt all the questions.

1. a) Differentiate between Diffusion Capacitance and Transition Capacitance. "Transition capacitance is inversely proportional to the square root of the reverse voltage applied across it." Verify this statement. 3+5

b) Explain the Zener diode as a voltage regulator with its I-V characteristics. 7

2. a) Explain the BJT as a switch. 5

b) What are the Delay time and Rise time? Briefly explain the Reach Through or Punch Through effect. 2+1

c) An NPN silicon transistor having a nominal β of 100 is to be used in a CE configuration with Vcc = 15 V. The Q point is to be Ic = 4mA and VCE = 12V. Now design the circuit diagram. 5

3. a) What do you mean by voltage regulation? Explain with the block diagram. 7

b) What is pinch off voltage? Compare the JFET with BJT. 2+6

4. a) For the amplifier circuit given below find 8

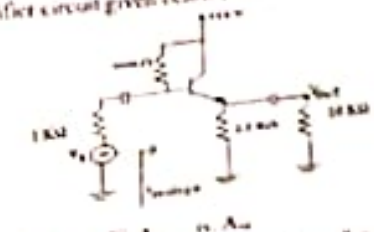

i. r_e ii. r_{in} iii. A_v iv. A_{vs}

Where the symbols have their usual meanings. (Given β = 100, r_o = 20KΩ)

b) For the given CE amplifier, find the following using r_e model:

i. Input impedance

ii. Output impedance

iii. Voltage gain

Assume β=90, V_{cc} = +15v)

4. a) Explain the working of full wave rectifier circuit having two diodes with a filter circuit

b) Why is JFET called Unipolar Electronic Device? Describe the drain transfer characteristics of JFET

5. a) What is multistage amplifier? Prove that the overall voltage gain of multistage Amplifier is the product of individual gain of each stage. Briefly explain the choice of transistor configuration in multistage amplifier.

b) What is cross over distortion? Explain how this distortion is minimized in class AB amplifier with necessary diagram

6. a) What are the essential criteria for oscillation? Explain Wein bridge oscillator circuit.

b) Design an adder circuit using op-amp to get the output expression as $V_{out} = -2V_1+5V_2-20V_3+10V_4$, where V_1, V_2, V_3, V_4 are the inputs. Assume R_f=50 kΩ

7. Write short notes on (Any two)

a) Diode switching Time

b) DMOSFET

c) Effect of Negative feedback on amplifier stability

d) Clippers and clampers

POKHARA UNIVERSITY

Level: Bachelor
Programme: BE
Course: Electronic Devices and Circuits

Semester: Spring

Year : 2018
Full Marks: 100
Pass Marks: 45
Time : 3hrs.

Candidates are required to give their answers in their own words as far as practicable

The figures in the margin indicate full marks

Attempt all the questions.

a) What is V-I characteristics of diode? Explain the effects of temperature in V-I characteristic curves 7

b) Describe Zener voltage regulation for all possible cases 8

a) Explain BJT as an amplifier and as a switch with required waveforms. 7

b) For the voltage divider circuit as shown below, circuit parameters are given as: 8

β= 100, R_1=10 KΩ, R_2 = 5 KΩ, R_C = 1 KΩ, R_E = 2 KΩ and V_{CC}=15 volts.

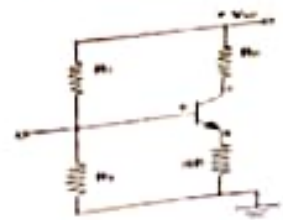

Draw DC loadline and locate operating point. Also calculate stability factor. 7

a) Define regulated and unregulated power supplies with suitable example 8

b) Explain construction and working principle of JFET. Also draw drain and transfer characteristics of a JFET 7

a) Differentiate between Hybrid Model and r_e Model. Sketch a hybrid and r_e model for CC Configuration. 8

b) A 3 stage amplifier has voltage gains of 50, 75 and 100 for the first,

POKHARA UNIVERSITY

Level: Bachelor | Semester: Fall | Year : 2021
Programme: BE | Full Marks: 100
Course: Electronic Devices and Circuits | Pass Marks: 45
Time : 3hrs.

Candidates are required to give their answers in their own words as far as practicable.

The figures in the margin indicate full marks.

Attempt all the questions.

1. a) Describe in your own words the conditions established by forward- and reverse-bias conditions on a p–n junction diode and how the resulting current is affected. 8

   b) What value of series resistance (R) is required when three 10-W, 10V, 1000 mA Zener diodes are connected in series to obtain a 30V regulated output from a 45 volt d.c. power source ? 7

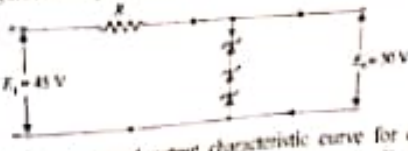

2. a) Explain the input and output characteristic curve for common emitter configuration with neat and labeled diagram. Explain the phenomenon of early effect. 8

   b) For the emitter follower network of figure below: 7

   i) Find I_B, I_C, and I_E

   ii) Determine V_B, V_C, and V_E

   iii) Calculate V_{CE}

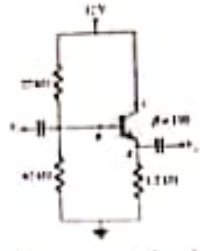

3. a) Explain the block diagram of regulated dc power supply with the waveform at each point. 7

   b) Explain the construction and working principle by MOSFET. Point out difference between DMOSFET and EMOSFET. 8

3. a) Sketch output waveform for given circuit assuming silicon diode. 8

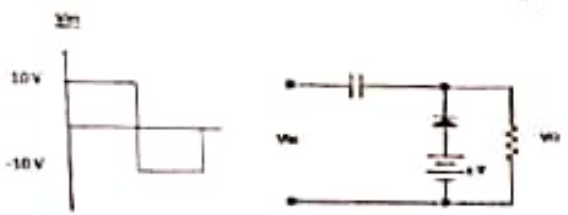

b) What is pinch-off voltage? Design a self bias NJFET circuit operating at 15mA and 10V. Given I_{DSS}=25mA, V_P=-4V and V_{DD}=25V. Also find the transconductance. 7

4. a) A CE amplifier transistor having h_{ie}=8kΩ, h_{re}=3.6x10^{4}, h_{oe}=25μA/V. Determine A_v, A_{vs}, Z_{in} and Z_o of the amplifier while Z_L=15KΩ and R_S=500Ω 8

b) Why cascading is necessary? Find the gain of n-stage cascaded amplifiers. 7

5. a) What do you mean by power amplifier? Show that the maximum possible efficiency of transformer coupled load class A power amplifier is 50%. 7

b) What are positive and negative feedback? Negative feedback extends the bandwidth. Explain it, with necessary derivations. 8

c) Find out the output voltage expression for differentiator and integrator circuit. Design an adder circuit using opamp to get output expression given by V_o=-3V_1-15V_2-120V_3 7

b) What is Barkhausen criterion for Oscillation? Design a RC phase shift oscillator to operate at a frequency of 5KHz. 8

Write short notes on. **(Any two)** 2×5

a) EMOSFET

b) Clipper circuit

c) Emitter follower

4. a) Find A_{vs}, A_i, Z_{in}, Z_{out} of following Ckt. Diagram using h- Parameter 8

b) Find V_1/V_s in the circuit below. ($\beta 1 = \beta 2 = 100$, $r_{e1} = r_{e2} = 20\ \Omega$). 7

5. a) Show that the maximum possible efficiency of Direct coupled load class A amplifier is 25% with necessary circuit diagram and derivation 7

b) Calculate overall gain of a negative feedback amplifier. Also list out advantages of negative feedback 8

6. a) Find out the output voltage expression for inverting and summing circuit with circuit diagram and Explain the characteristics of practical operational amplifier 8

b) What is Barkhausen criterion for Oscillator? Design a RC phase shift shift oscillator to operate at a frequency of 5KHz. 7

7. Write short notes on: **(Any two)** 2×5

a) Clamper and Clamping circuits

b) Emitter follower

c) JFET

POKHARA UNIVERSITY

Level: Bachelor | Semester: Fall | Year : 2020

Programme: BE | Full Marks: 100

Course: Electronic Devices and Circuits | Pass Marks: 45

Time : 3hrs.

Candidates are required to give their answers in their own words as far as practicable.

The figures in the margin indicate full marks.

Attempt all the questions.

1. a) What happens when a forward biased diode is suddenly reverse biased? Explain with necessary diagrams. If reverse saturation current of diode is 5nA at 35°C, find reverse saturation current at 235°C. 8

b) For the circuit given below, find the output voltage, current flowing through a zener diode, and voltage drop across a series resistance, and power dissipated across the zener diode. 7

2. a) Explain thermal instability and thermal runaway. Define stability factor and find stability Factor for any one configuration of a transistor. 7

b) For the BJT common emitter circuit shown below, determine the operating point and locate it in the load line. Assume $\beta = 100$. 8

National Academy of Science and Technology

(Affiliated to Pokhara University)

Accredited by University Grants Commission (UGC), Nepal 2022

Dhangadhi, Kailali

First Terminal Examination

Level: Bachelor

Semester: I_Fall

Year : 2022

Program: B.E. Computer

F.M : 100

Course: **Electronics Devices and Circuits**

P.M : 45

Time : 3Hrs.

Candidates are required to give their answers in their own words as far as practicable. The figures in the margin indicate full marks.

Attempt all the questions.

1. a) What is VI characteristics of diode? Explain the effects of temperature in VI characteristic curves. 7

   b) For the circuit shown in figure below find 8

      i. The output voltage

      ii. Voltage drop across series resistance

      iii. Current through Zener diode

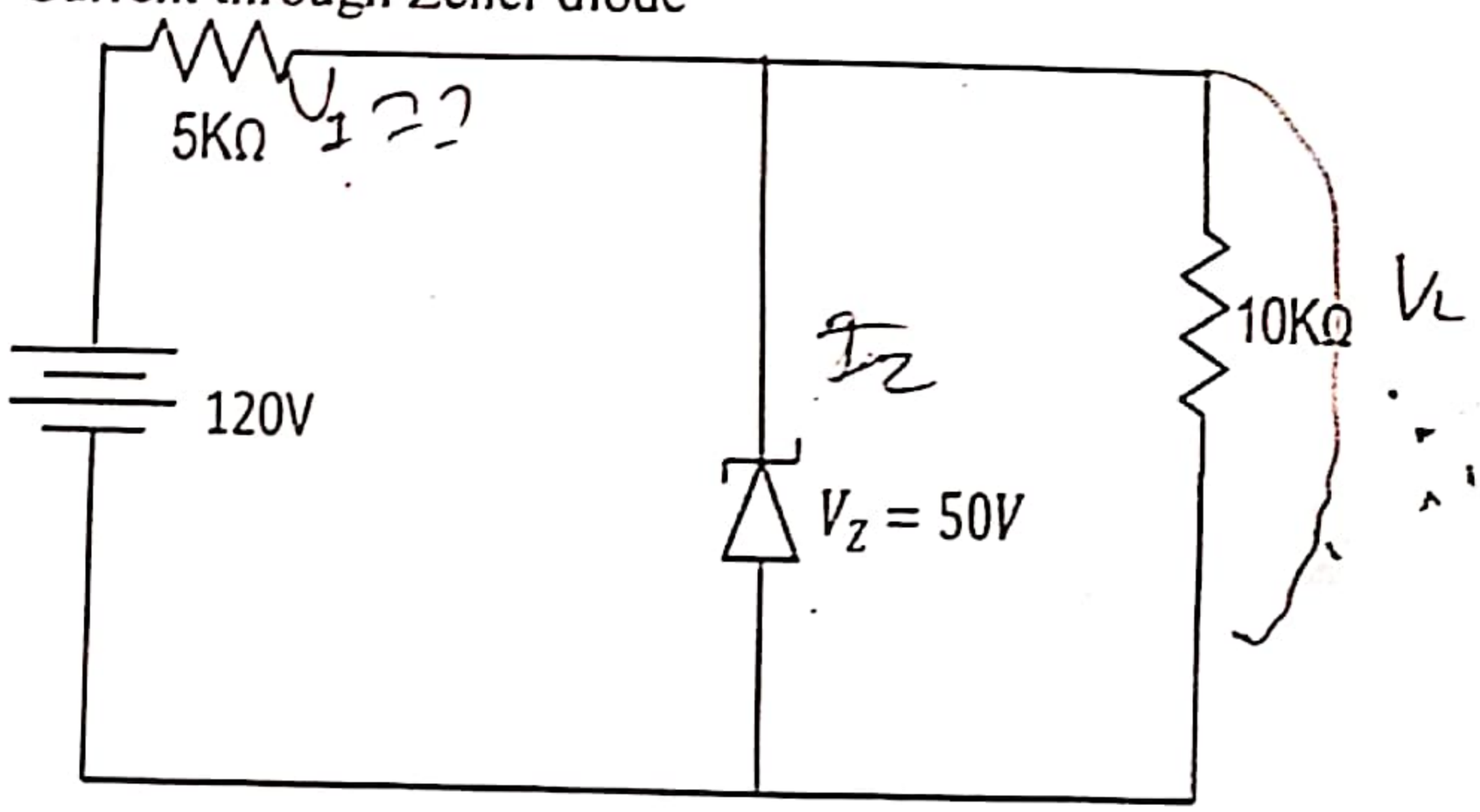

2. a) What do you mean by dynamic resistance of a diode? Show that dynamic resistance of diode is $r_D = \frac{\eta V_T}{I}$. 8

   b) What is bipolar junction transistor? Why is it so called? Explain the working principle of NPN transistor with necessary diagram. 7

3. a) For the transistor amplifier shown below given that $V_{CC} = 22V$. 8

      i. Draw dc load line

      ii. Operating point.

8

er in
rent
the
). V

or 8

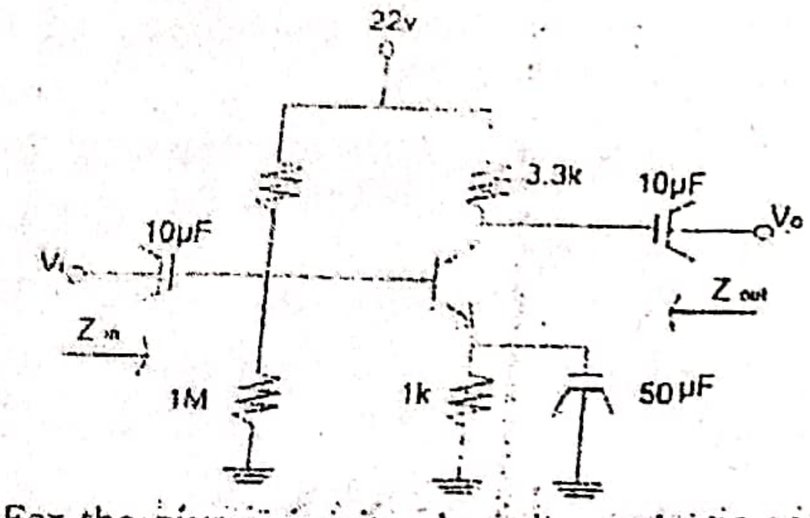

4. a) For the given circuit , draw its equivalent h-model and find overall voltage gain (Vo/Vs). Assume hie = 1.2K, hfe = 100, hre and hoe are negligible. 7

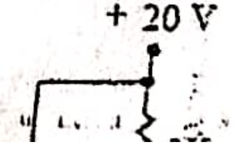

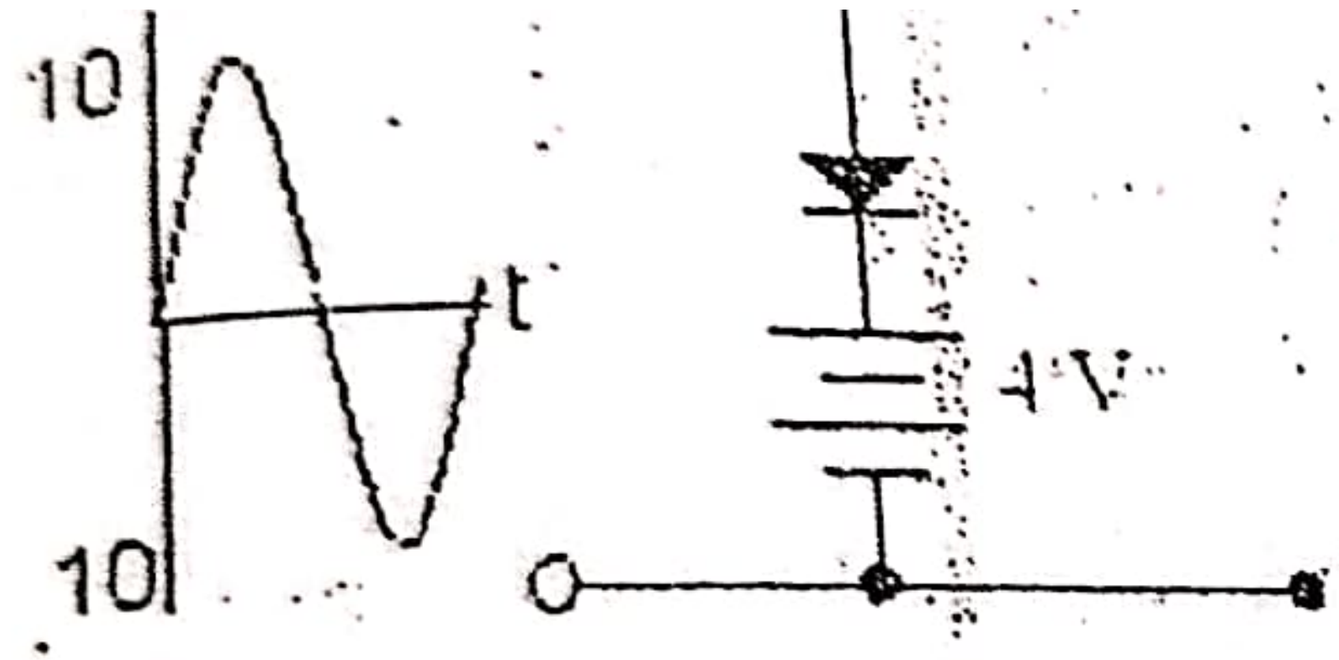

b) The operating points for the following FET configuration are defined by $V_{GSQ}=-3.6V$ and $I_{DQ}=2mA$, with $I_{DSS}=13mA$, and $V_P=-6V$. The value of output admittance is 25μS. Determine 7

i. G_m

ii. r_d

iii. Z_i

iv. Z_o

v. Av.

The notations have usual meaning.

b)

5. a)

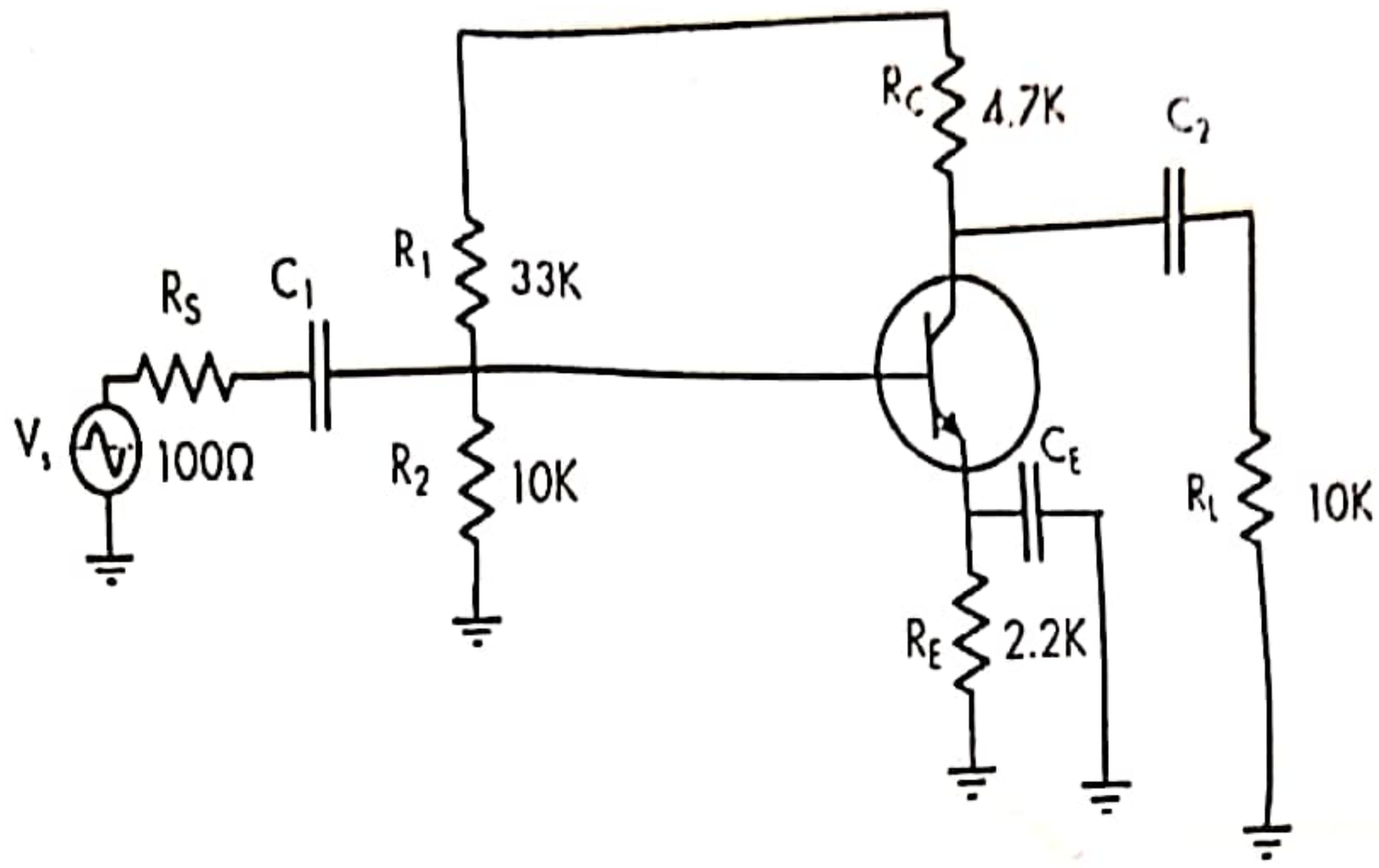

7

b) For the given CE amplifier, find the following using r_e model

i. Input impedance

ii. Output impedance

iii. Voltage gain and current gain (Assume β = 100, Vcc = +20V

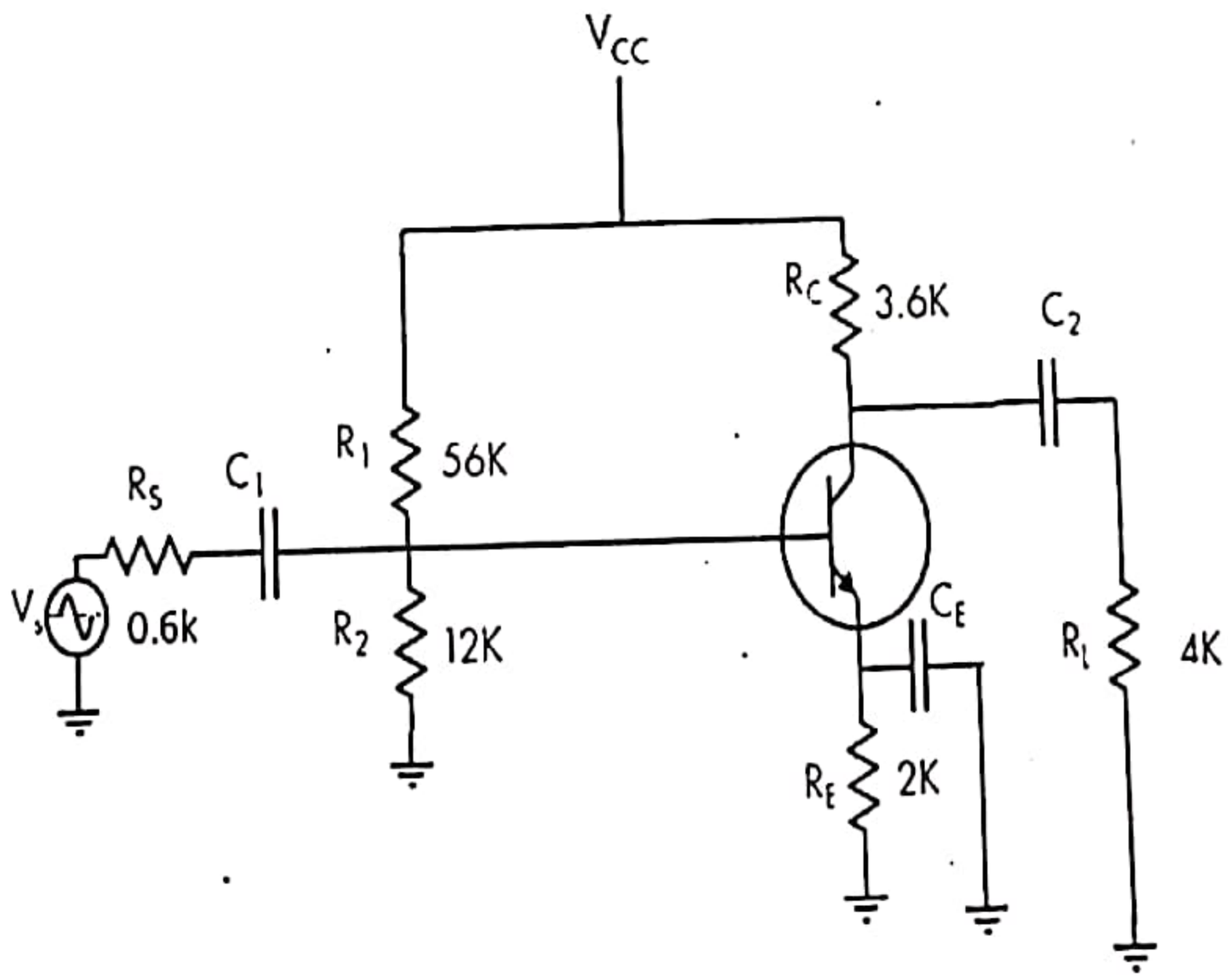

2×5

7. Write short notes on **any two**:

a) Emitter Followers

b) Common Emitter

c) Extrinsic Semiconductor

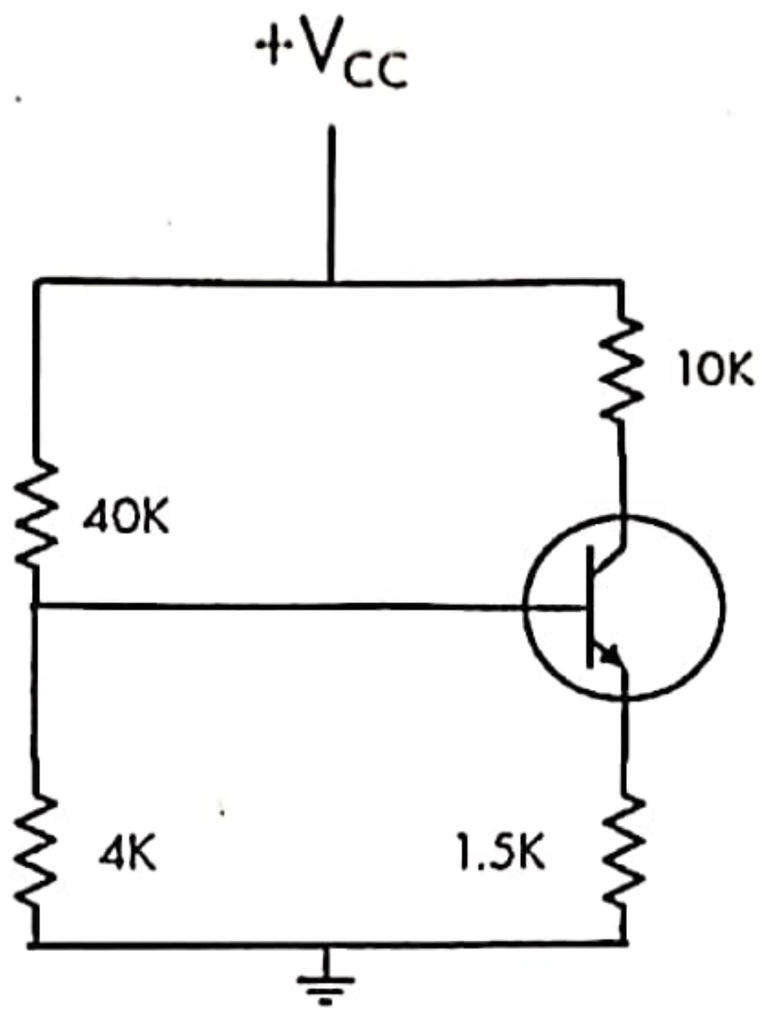

b) An NPN silicon transistor having a nominal β of 100 is to be used in a CE configuration with $V_{CC} = 15V$. The Q point is to be $I_C = 4mA$ and $V_{CE} = 12V$. Now design the circuit diagram. 7

4. a) Define rectification. Explain that the efficiency of full wave rectifier is double the half wave rectifier. 8

b) Calculate output voltage and PIV rating of each diode for the circuit shown, with input signal $V_{in} = 100\text{Sin}\omega t$ V. 7

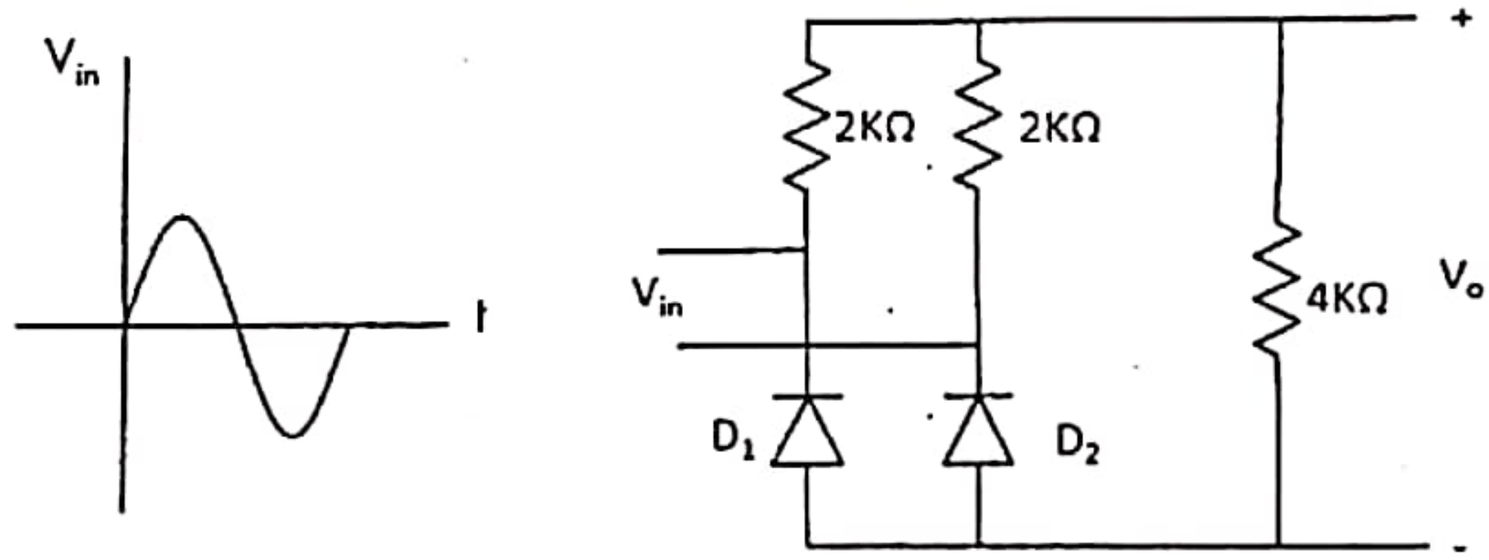

5. a) FETs are superior to BJTs. Justify. 7

b) Explain construction and working principle of JFET. Also draw drain and transfer characteristics of a JFET. 8

6. a) The transistor shown in figure below has the following h-parameter values as $h_{ie} = 1K\Omega$, $h_{re} = 2.5 \times 10^{-4}$, $h_{fe} = 50$, $h_{oe} = 25\mu s$. 8

Find:

i. Input impedance

ii. Voltage gain

iii. Current gain

iv. Output impedance

POKHARA UNIVERSITY

Level: Bachelor Semester:Fall Year : 2020
Programme:BE Full Marks: 100
Course: Electronic Devices and Circuits Pass Marks: 45
Time : 3hrs.

Candidates are required to give their answers in their own words as far as practicable.

The figures in the margin indicate full marks.

Attempt all the questions.

1. a) What happens when a forward biased diode is suddenly reverse biased? Explain with necessary diagrams. If reverse saturation current of diode is 5nA at 35°C, find reverse saturation current at 235°C. 8

b) For the circuit given below, find the output voltage, current flowing through a zener diode, and voltage drop across a series resistance, and power dissipated across the zener diode. 7

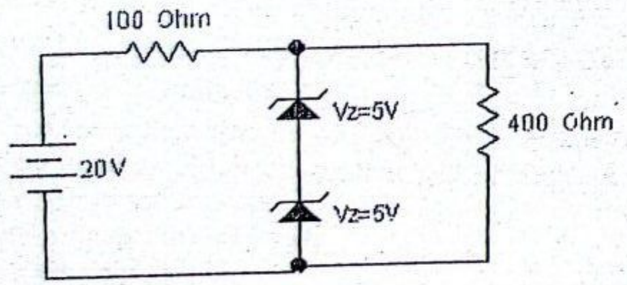

2. a) Explain thermal instability and thermal runaway. Define stability factor and find stability Factor for any one configuration of a transistor. 7

b) For the BJT common emitter circuit shown below, determine the operating point and locate it in the load line. Assume $\beta = 100$. 8

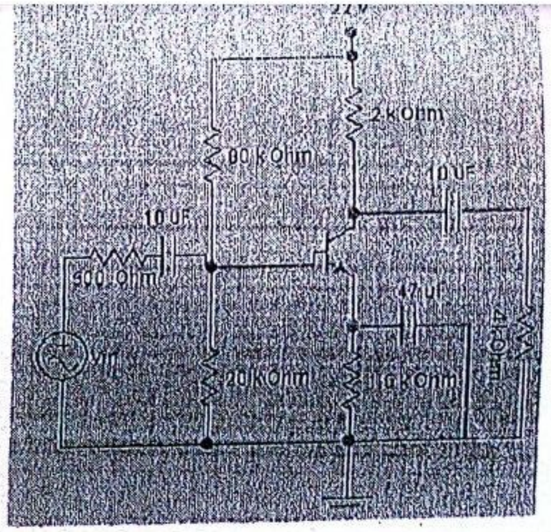

3. a) Sketch output waveform for given circuit assuming silicon diode. 8

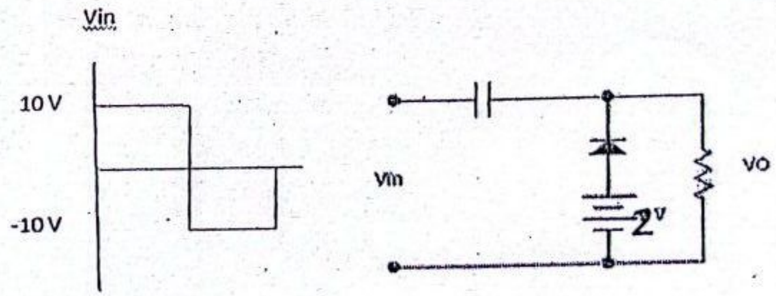

b) What is pinch-off voltage? Design a self bias NJFET circuit operating at 15mA and 10V. Given I_{DSS}=25mA, Vp=-4V and V_{DD}=25V. Also find the transconductance. 7

4. a) A CE amplifier transistor having h_{ie}=8kΩ, h_{re}=3.6x10^4, h_{fe}=25μA/V. Determine A_i, A_v, Z_{in} and Z_0 of the amplifier while Z_L=15KΩ and R_S=500Ω 8

b) Why cascading is necessary? Find the gain of n-stage cascaded amplifiers. 7

5. a) What do you mean by power amplifier? Show that the maximum possible efficiency of transformer coupled load class A power amplifier is 50%. 7

b) What are positive and negative feedback? Negative feedback extends the bandwidth. Explain it, with necessary derivations. 8

6. a) Find out the output voltage expression for differentiator and integrator circuit. Design an adder circuit using opamp to get ouput expression given by $V_0=-3V_1-15V_2-120V_3$ 7

b) What is Barkhausen criterion for Oscillation? Design a RC phase shift oscillator to operate at a frequency of 5KHz. 8

7. Write short notes on: **(Any two)** 2×5

a) EMOSFET

b) Clipper circuit

c) Emitter follower

POKHARA UNIVERSITY

Level: Bachelor
Semester: Fall
Year : 2019
Programme: BE
Full Marks: 100
Course: Electronic Devices and Circuits
Pass Marks: 45
Time : 3hrs.

Candidates are required to give their answers in their own words as far as practicable.

The figures in the margin indicate full marks.

Attempt all the questions.

1. a) Explain the operation of PN diode in case of forward biased and reversed biased .Differentiate between zener breakdown and avalanche breakdown 7

   b) For the circuit shown in figure below find 8

      i. The output voltage

      ii. Voltage drop across series resistance

      iii. Current through zener diode

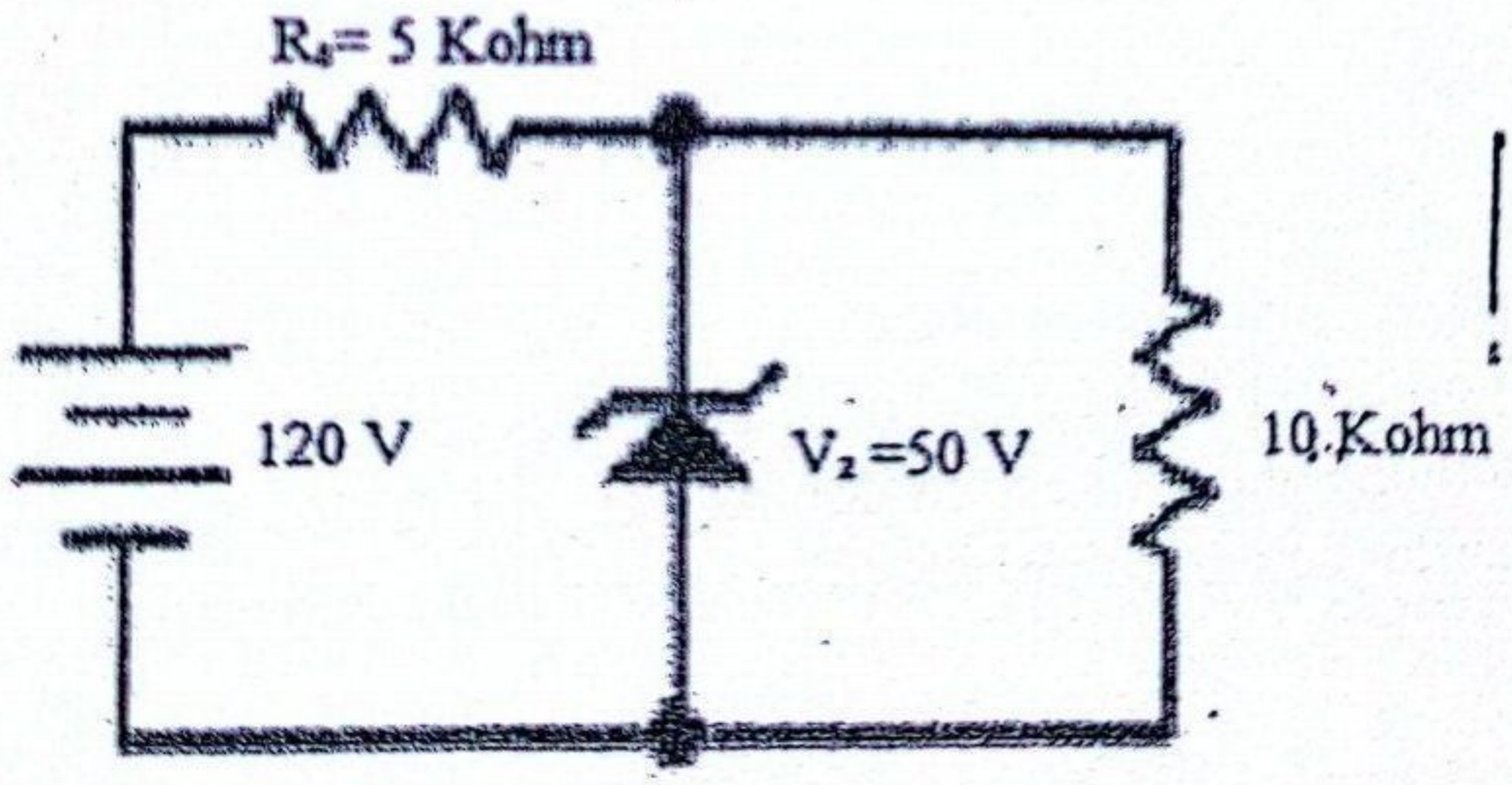

2. a) Explain the output characteristics of Common base transistor. Also derive the relationship between α, β, and γ. 7

   b) For the BJT common emitter circuit shown below, determine the operating point and locate it in the load line. Assume β = 100. 8

सुगम स्टेसनरी सप्लायर्स एण्ड फोटोकपी सर्भिस
बालकुमारी, ललितपुर ९८०१५९९५९२
NCIT College

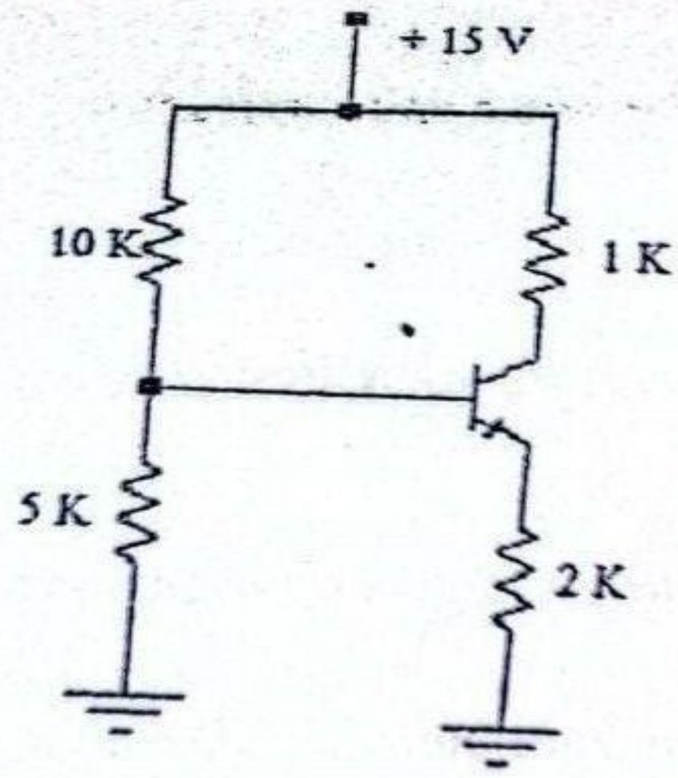

3. a) Calculate output voltage and PIV rating of each diode for the circuit shown, with input signal Vin=100sinwt. 8

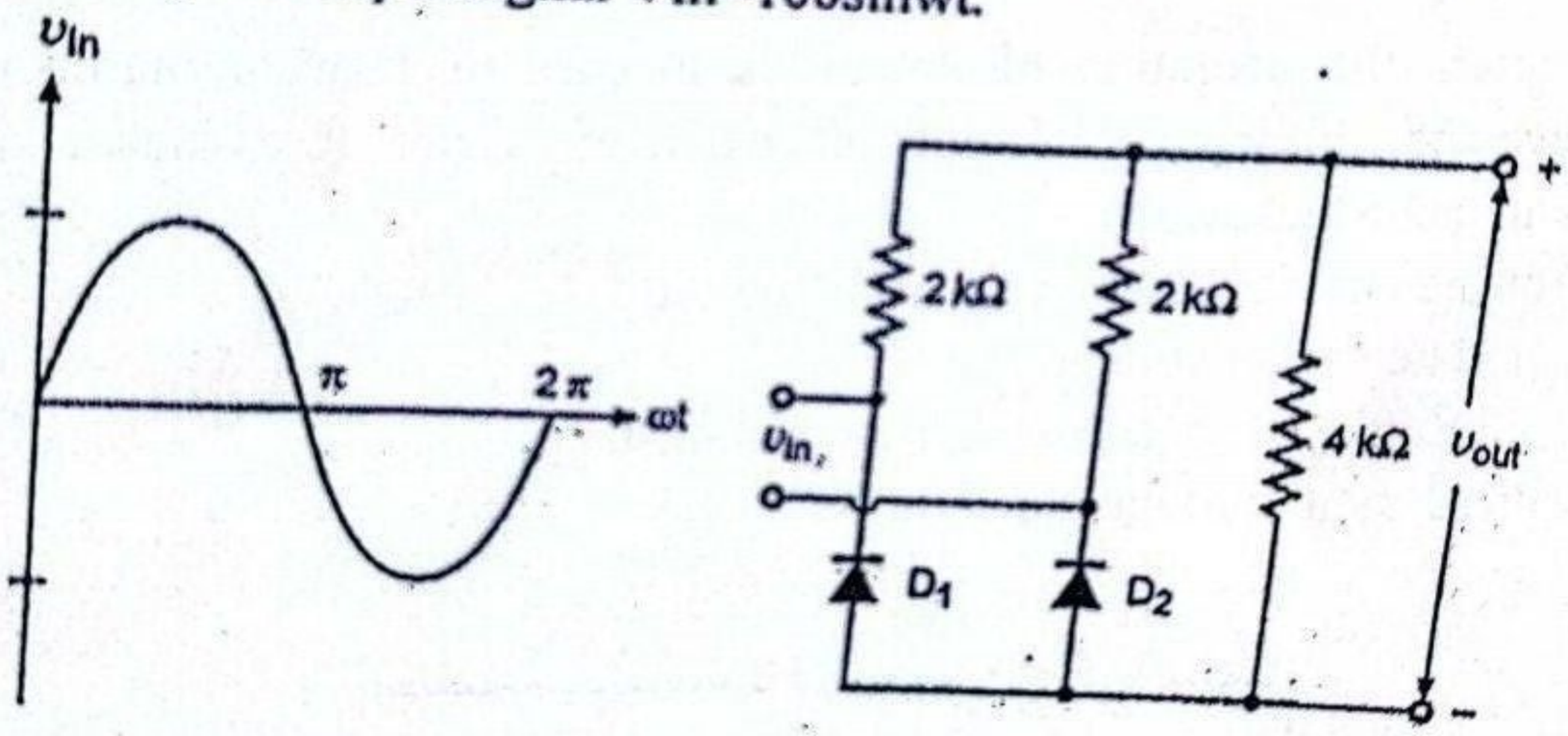

b) What is pinch-off voltage? Prove that conductance of JFET is proportional to square root of product of I_{DS} and I_{DSS}. 7

4. a) Determine the expression for Ai, Zi, Av & Yo for the two port transistor network shown below in terms of h parameters. 8

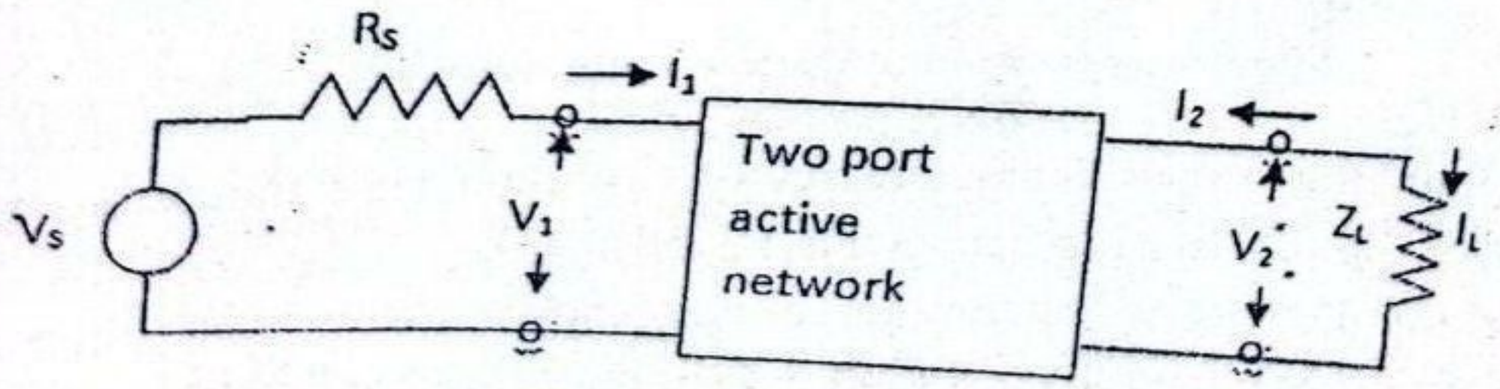

b) Find V_L/V_s in the circuit below: ($\beta 1 = \beta 2 = 100$, $r_{e1} = r_{e2} = 25\ \Omega$). 7

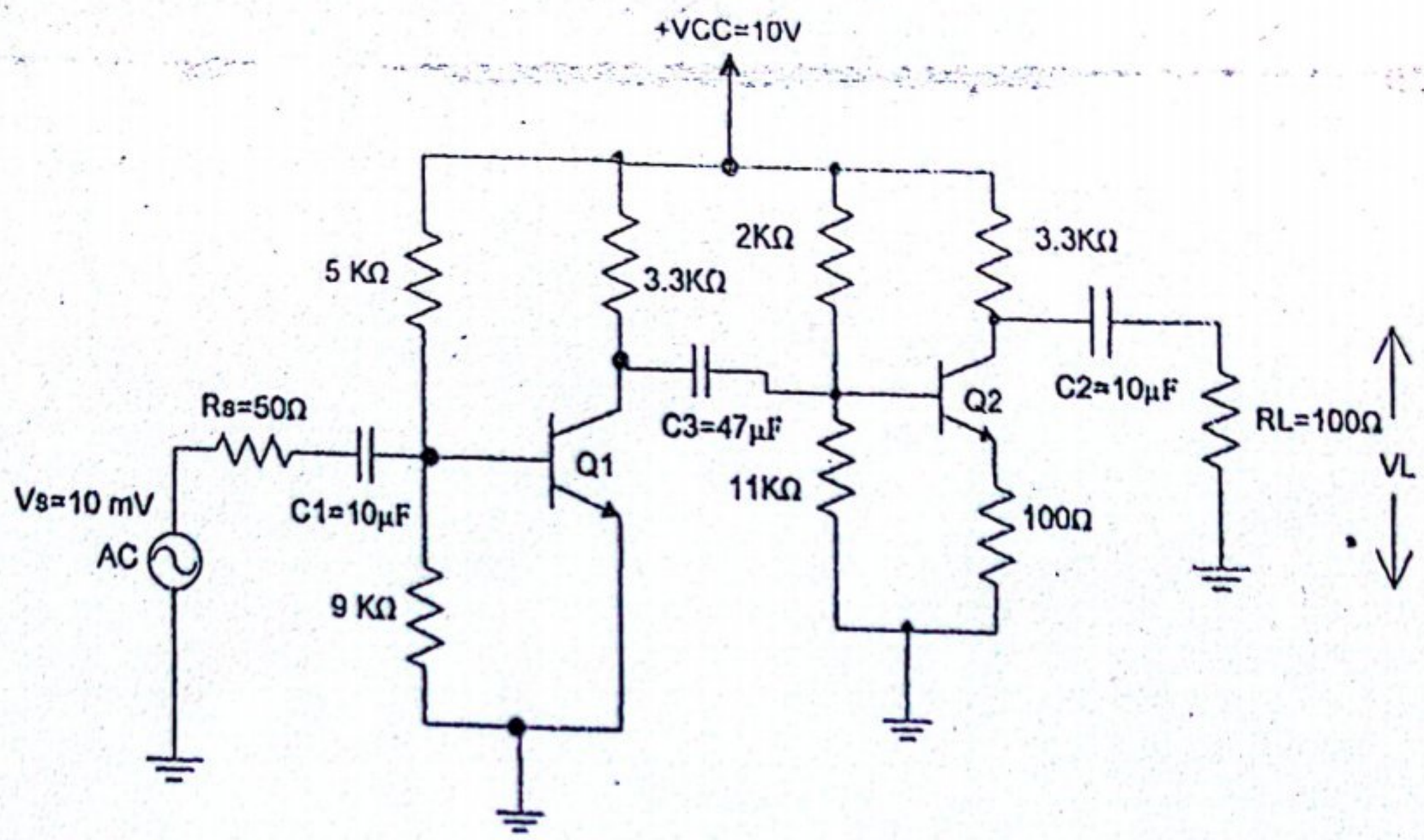

5. a) Show that the maximum possible efficiency of transformer coupled load class A amplifier is 50% with necessary circuit diagram and derivation 7

   b) Derive closed loop gain expression for feedback amplifier and explain the characteristics of negative feedback amplifier 8

6. a) What are the essential condition for oscillation? Explain Wein bridge oscillator with circuit Diagram. Derive the expression for the frequency of oscillator? 8

   b) Write the salient feature of operational amplifier. Design a summing operational amplifier circuit that will produce an output voltage $V_{out} = -4V_1 - V_2 + 0.1\ V_3$. 7

7. Write short notes on: **(Any two)** 2×

   a) DMOSFET

   b) Emitter follower

   c) Full wave rectifier

POKHARA UNIVERSITY

Level: Bachelor Semester:Spring Year : 2019
Programme:BE Full Marks: 100
Course: Electronic Devices and Circuits Pass Marks: 45
Time : 3hrs.

Candidates are required to give their answers in their own words as far as practicable.

The figures in the margin indicate full marks.

Attempt all the questions.

1. a) What do you mean by dynamic resistance of a diode? Derive an expression for dynamic resistance of a diode.

   b) Calculate the current through load resistor and Zener diodes.

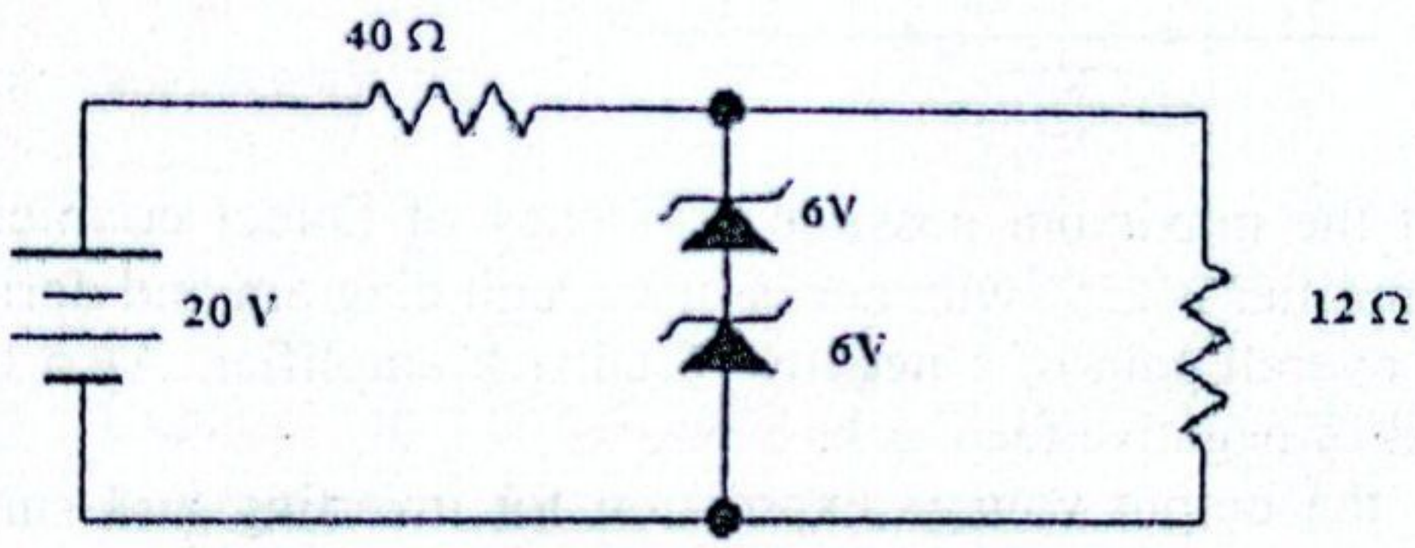

2. a) What is bipolar junction transistor? and what are their applications. Explain the operation of NPN transistor with its current direction

   b) Find Q-point or operating point for the circuit given below. Assume β=100 and draw the dc load line.

3. a) Sketch the output waveform for the circuit shown below.

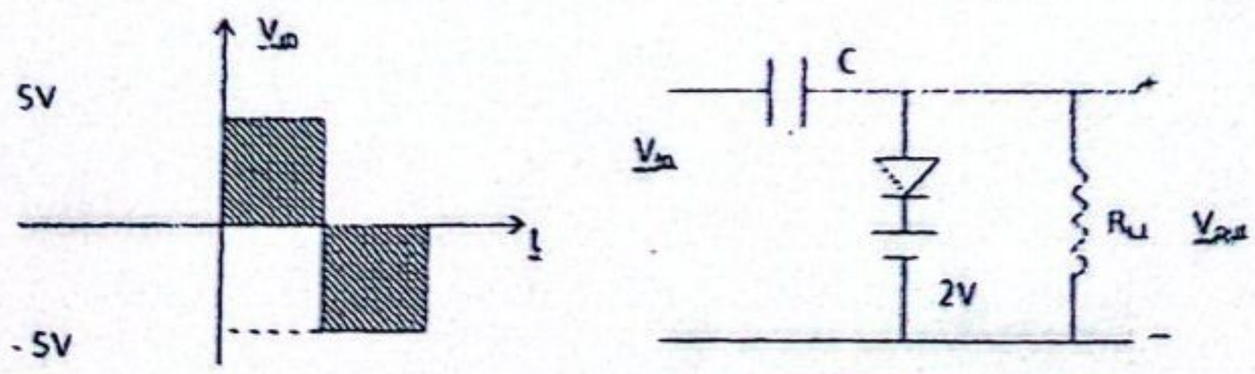

   b) FETs are superior to BJTs Justify.

   c) Advantages of lower values of V_T (threshold voltage) in E-MOSFET Explain .

4. a) Find A_{vs}, A_v, Z_0, Z_{in} of following Ckt. Diagram using h- parameter. 8

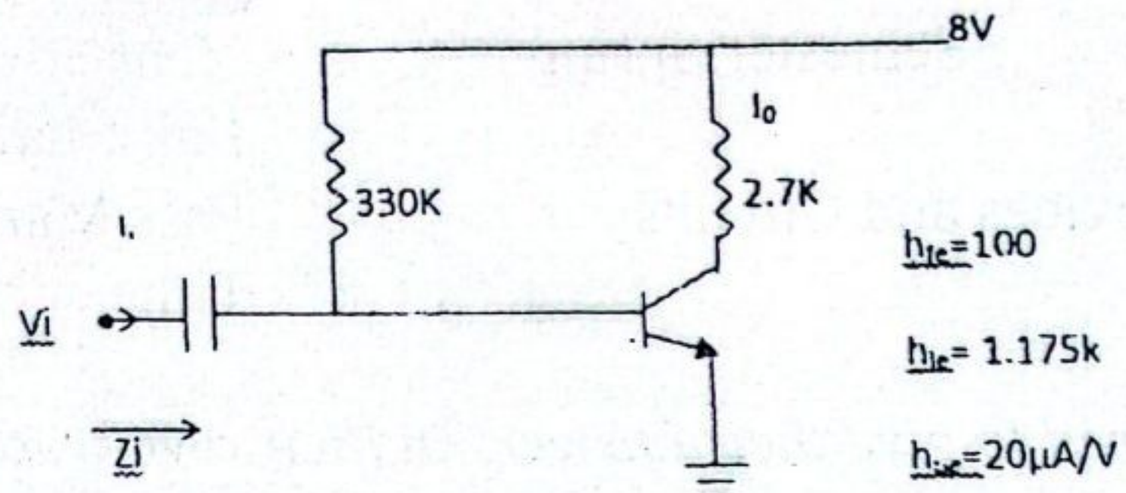

b) Find V_L/V_S in the circuit below: ($\beta 1 = \beta 2 = 100$, $r_{e1} = r_{e2} = 20\ \Omega$). 7

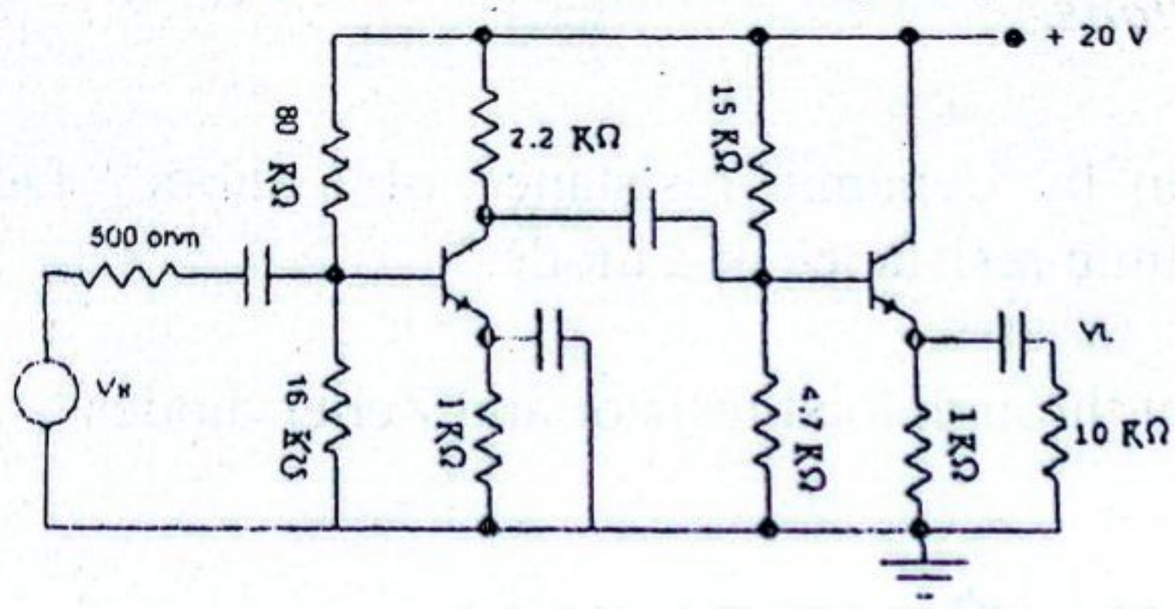

5. a) Show that the maximum possible efficiency of Direct coupled load class A amplifier is 25% with necessary circuit diagram and derivation 7

b) Calculate overall gain of a negative feedback amplifier. Also list out advantages of negative feedback. 8

6. a) Find out the output voltage expression for inverting and summing circuit with circuit diagram and Explain the characteristics of practical operational amplifier 8

b) What is Barkhausen criterion for Oscillator? Design a RC phase shift shift oscillator to operate at a frequency of 5KHz. 7

7. Write short notes on: **(Any two)** 2×5

a) Clamper and Clamping circuits

b) Emitter follower

c) JFET

POKHARA UNIVERSITY

Level: Bachelor | Semester: Fall | Year : 2018
Programme: BE | Full Marks: 100
Course: Electronics Device and Circuits | Pass Marks: 45
Time : 3hrs.

Candidates are required to give their answers in their own words as far as practicable.
The figures in the margin indicate full marks.
Attempt all the questions.

1. a) Explain the importance of Semiconductor materials on modern world. Explain the forward and reverse biasing of PN Junction diode with circuit diagram.

   b) If V_z=8v, Rs =100Ω, R_L = 990Ω. Find V_o, I_L, I_Z, if a) V_{in} = 12 V b) V_{in} = 8.5V

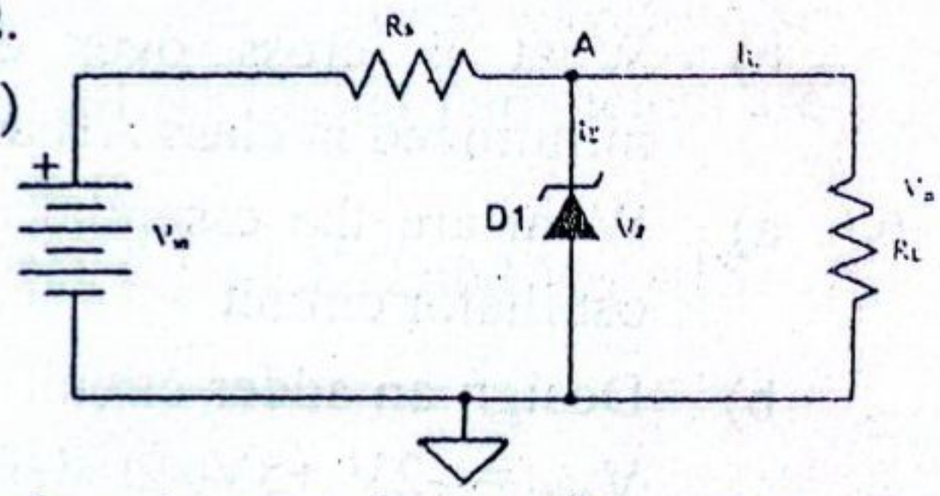

2. a) Explain the current flow mechanism in transistor with necessary diagram.

   b) Draw the circuit diagram to obtain the characteristic of BJT in CE configuration. Draw output characteristics and indicate different regions of operations.

3. a) For the circuit given below:
   i. Draw DC load line
   ii. Find Q point
   (Assume β=90, V_{cc}= +15 V)

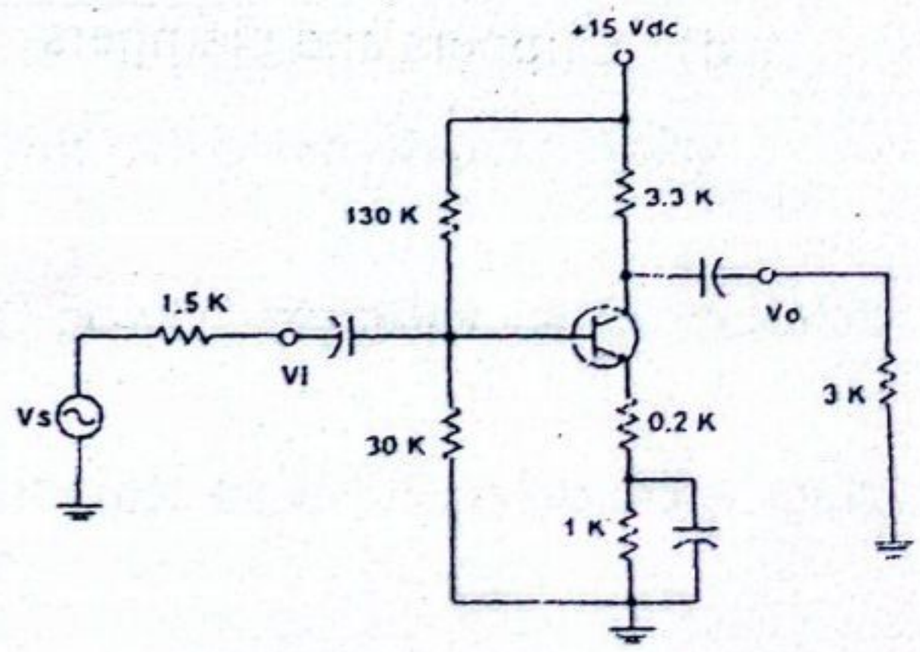

b) For the given CE amplifier, find the following using r_e model: 8

i. Input impedance

ii. Output impedance

iii. Voltage gain

Assume ß=90, V_{cc}= +15v)

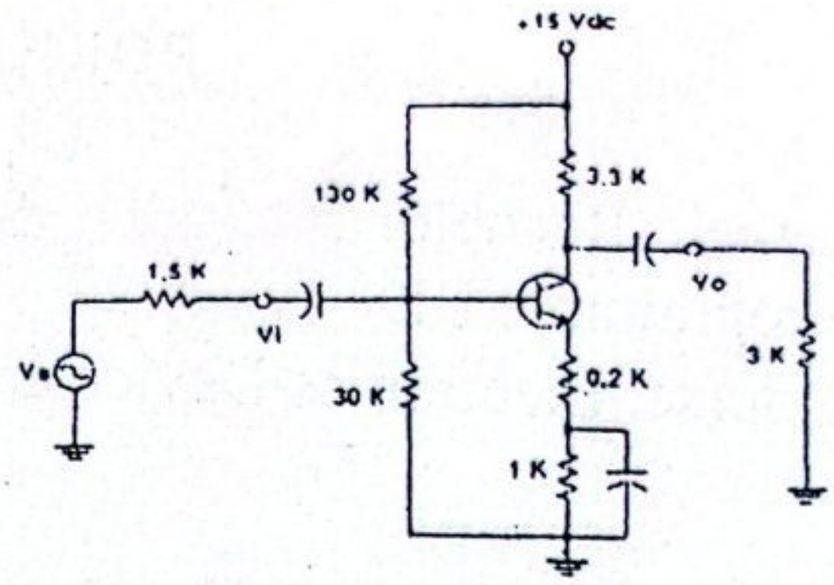

4. a) Explain the working of full wave rectifier circuit having two diodes with π-filter circuit. 8

b) Why is JFET called Unipolar Electronic Device? Describe the drain transfer characteristics of JFET. 7

5. a) What is multistage amplifier? Prove that the overall voltage gain of multistage Amplifier is the product of individual gain of each stage. Briefly explain the choice of transistor configuration in multistage amplifier. 8

b) What is cross over distortion? Explain how this distortion is minimized in class AB amplifier with necessary diagrams. 7

6. a) What are the essential criteria for oscillation? Explain Wein bridge oscillator circuit. 8

b) Design an adder circuit using op-amp to get the output expression as $V_{out} = -2V_1+5V_2-20V_3+10V_4$, where V_1, V_2, V_3, V_4 are the inputs. Assume R_f=50 kΩ. 7

7. Write short notes on: (**Any two**) 2×5

a) Diode switching Time

b) DMOSFET

c) Effect of Negative feedback on amplifier stability

d) Clippers and clampers

POKHARA UNIVERSITY

Level: Bachelor Semester: Spring Year : 2018
Programme: BE Full Marks: 100
Course: Electronic Devices and Circuits Pass Marks: 45
Time : 3hrs.

Candidates are required to give their answers in their own words as far as practicable.

The figures in the margin indicate full marks.

Attempt all the questions.

1. a) What is V-I characteristics of diode? Explain the effects of temperature in V-I characteristic curves 7
   b) Describe Zener voltage regulation for all possible cases. 8
2. a) Explain BJT as an amplifier and as a switch with required waveforms. 7
   b) For the voltage divider circuit as shown below; circuit parameters are given as: 8
   $\beta = 100$, $R_1 = 10\ K\Omega$, $R_2 = 5\ K\Omega$, $R_C = 1\ K\Omega$, $R_E = 2\ K\Omega$ and $V_{CC} = 15$ volts.

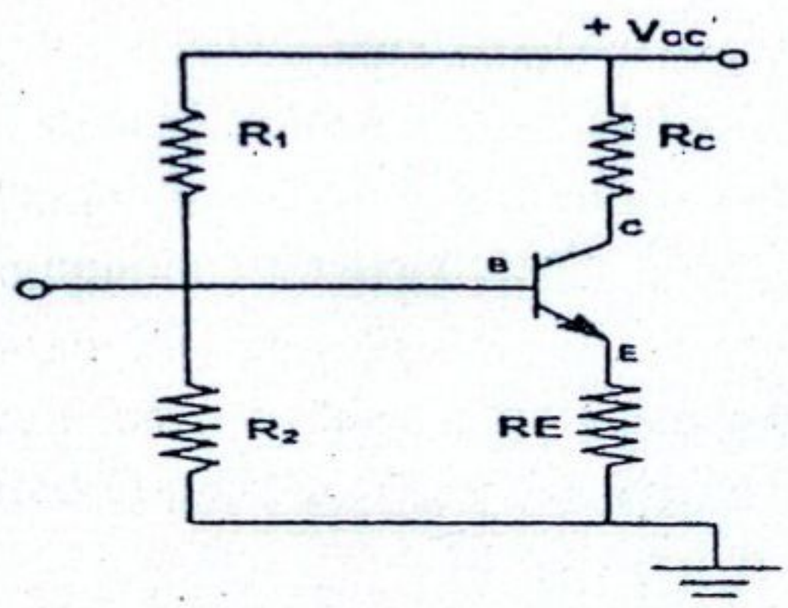

   Draw DC loadline and locate operating point. Also calculate stability factor.
3. a) Define regulated and unregulated power supplies with suitable example. 7
   b) Explain construction and working principle of JFET. Also draw drain and transfer characteristics of a JFET. 8
4. a) Differentiate between Hybrid Model and r_e Model. Sketch a hybrid and r_e-model for CC Configuration. 7
   b) A 3-stage amplifier has voltage gains of 50, 75 and 100 for the first, 8

second and third stage. Find the overall gain of the amplifiers. Also, express the overall gain in dB. Prove that the total phase shift of n-cascaded amplifier is the sum of the phase shifts introduced by the individual stages.

5. a) What are power amplifiers? Draw class B amplifier and derive the expression of its efficiency. 8

b) Define feedback. Derive an expression for gain of a negative feedback amplifier. 7

6. a) Compare characteristics of ideal and practical op amp. Design an op amp circuit to produce output, $V_0=4V_1+5V_2-0.5V_3$ where V_1, V_2 and V_3 are inputs and V_0 is output. 7

b) State Barkhausen's criteria for oscillation. Explain wien bridge oscillator and compute its frequency of oscillation. 8

7. Write short notes on: **(Any two)** 2×5

a) Clamping Circuits

b) MOSFET

c) Emitter Follower

POKHARA UNIVERSITY

Level: Bachelor | Semester: Fall | Year : 2017
Programme: BE | Full Marks: 100
Course: Electronic Devices and Circuits | Pass Marks: 45
Time : 3hrs.

Candidates are required to give their answers in their own words as far as practicable.

The figures in the margin indicate full marks.

Attempt all the questions.

1. a) Show that $\beta_{DP} = \beta^2$ for darlington pair amplifier. 8
   b) What do you mean by cross over distortion? How can you overcome this, explain it. 7
2. a) For Emitter follower configuration find the expression of input impedance and voltage gain current gain. 7
   b) What do you mean by Zener diode? Explain its application. 8
3. a) An RC-coupled amplifier has a mid-frequency gain of 200 and frequency response from 100HZ to 200HZ. A negative feedback network with β=0.02 is kept into the amplifier circuit. Find the new system performance. 8
   b) "Positive feedback amplifier as oscillator" explain this statement. 7
4. a) Why do we need small signal low frequency model of BJT? Describe it. 5
   b) Design an operational amplifier circuit using two inverting configuration circuit to produce the output of V0= -0V1+5V2+0.5V3-20V4. 5
   c) Make comparison between BJT and JFET. 5
5. a) Design a self-bias circuit for an NPN silicon transistor with h_{fe} = 100 and V_{BE} = 0.6V. The desired Q-point is V_{CE} = 5V and I_C = 1mA and S$\leq$ 8. Assume V_{CC} = 10V. 8
   b) With suitable diagram describe the working principle of NPN transistor. 7
6. a) Describe the operation of bridge rectifier. 5
   b) With suitable diagram describe working principle of clamping circuit. 5
   c) EMOSFET works only in Enhancement mode, support this statement. 5
7. Write short notes on: (**Any two**) 2×5
   a) Junction breakdown
   b) Multistage amplifier
   c) Power dissipation and heat sinks

POKHARA UNIVERSITY

Level: Bachelor
Programme: BE
Course: Electronics Devices and Circuits

Semester: Spring

Year : 2017
Full Marks: 100
Pass Marks: 45
Time : 3hrs.

Candidates are required to give their answers in their own words as far as practicable.

The figures in the margin indicate full marks.

Attempt all the questions.

1. a) Define Fermi-level in an intrinsic semiconductor, hence prove that "the Fermi level lies mid-way between the conduction and valence bands.

   b) Discuss the formation of Volt-amp characteristic of P-N junction. What happens when a P-N junction is biased in
      i. forward direction
      ii. backward direction.

2. a) Can transistor action be achieved by connecting two back to back diodes? If not, explain the reason. Explain in detail NPN transistor ie. its structure (doping area, width etc.) and its action. What are $\propto$ and β? What is their relationship?

   b) Draw the circuit diagram to obtain the characteristics of BJT in CE configuration. Draw output characteristics curves and indicate the different regions of operation.

3. a) A sinusoidal voltage of 40V and frequency $50Hz$ is applied to a half-wave rectifier. $R_L = 200\Omega$, $V_r = 0$, $R_F = 20\Omega$, $R_r = \infty$. Find V_{dc}, I_{dc}, I_{max}, I_{rms}, P_{dc}, η, ripple factor and percentage regulation.

   b) What is the necessity of having filters in power supplies? Explain with diagram of how R-C filter improves the output of rectifier.

4. a) Why JFET is called voltage controlled device? Draw the structure and output characteristics of P-channel JFET. Indicate different regions in the curve and explain its significance.

   b) For the given CE amplifier, find the following using r_e model
      i. input impedance
      ii. output impedance

iii. voltage gain

(Assume $\beta = 90$, $V_{CC} = +19V$)

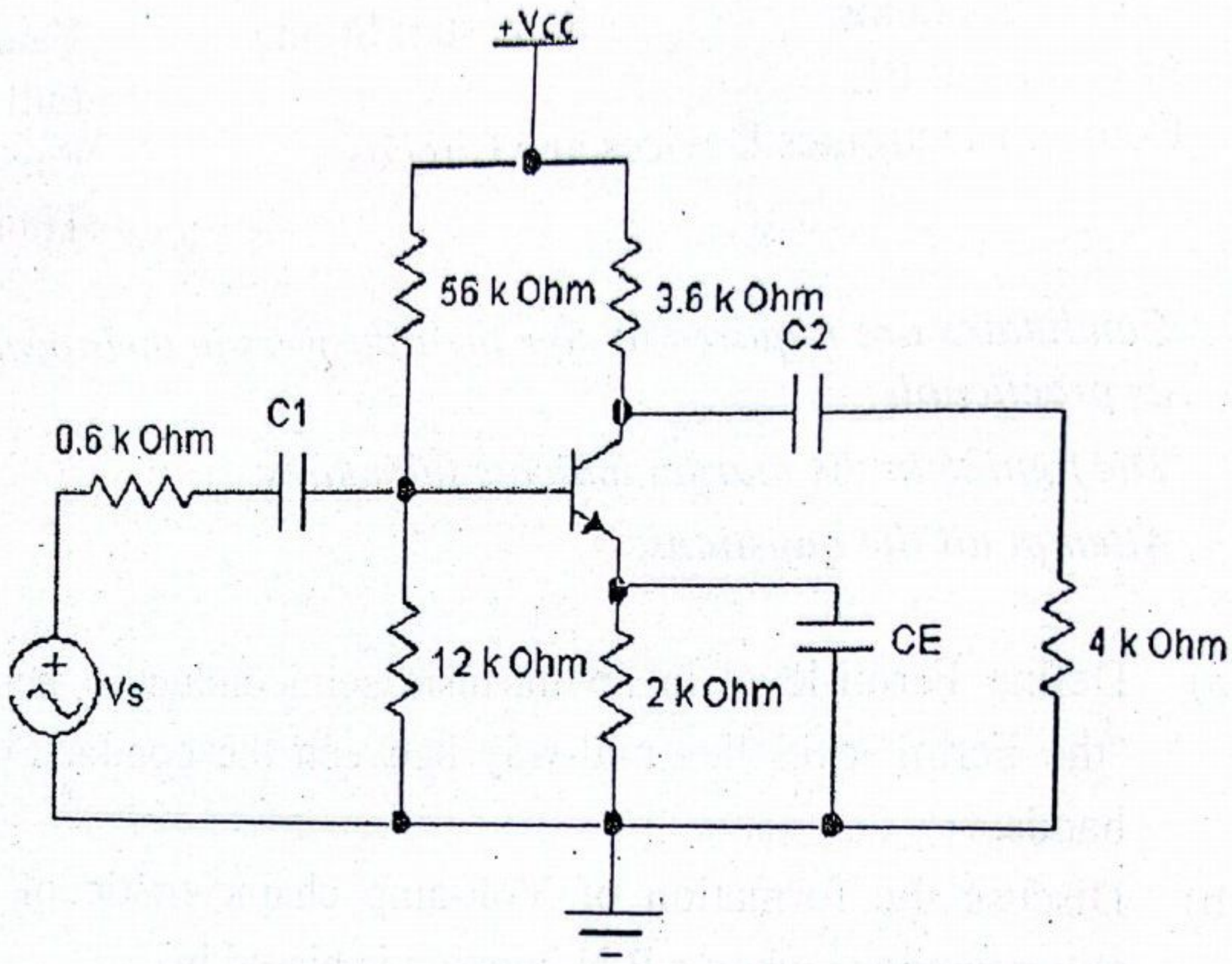

5. a) Briefly explain, the basic principle behind push-pull amplifiers which class of amplifiers are most likely to experience cross-over distortion explain with wave forms. What are the techniques to minimize it? 7

b) What are multi-stage amplifiers? Which configuration of amplifier is chosen in the intermediate stage and why? Derive the equation for the overall voltage of multistage amplifier in terms of the individual voltage gains? 8

6. a) State Ideal characteristics of op-amp? Explain the operation of Wein bridge oscillator and derive its frequency of oscillation. 8

b) Design an adder circuit using op-amp to obtain the output having expression as $V_O = -(3V_1 + 15V_2 + 120V_3)$. 7

7. Write short notes on: **(Any two)** 2x5

a) Diffusion current

b) Small-signal model of FET

c) Effect of negative feedback in bandwidth

सुगम स्टेसनरी सप्लायर्स एण्ड फोटोकपी सर्भिस
बालकुमारी, ललितपुर ९८१५९९५९२
NCIT College

POKHARA UNIVERSITY

Level: Bachelor
Programme: BE
Course: Electronic Device and Circuits

Semester: Fall

Year : 2016
Full Marks: 100
Pass Marks: 45
Time : 3hrs.

Candidates are required to give their answers in their own words as far as practicable.

The figures in the margin indicate full marks.

Attempt all the questions.

सुगम स्टेसनरी सप्लायर्स एण्ड फोटोकपी सर्भिस
बालकुमारी, ललितपुर ९८४१५९९५९२
NCIT College

1. a) What is semiconductor material? Explain the importance of semiconductor material on electronic Device with examples. 8

b) If Vz = 8V, Rs = 100Ω, R_L = 990Ω. Find Vo, I_L, Iz, if, 7

i. Vin = 12v

ii. Vin = 8.5V

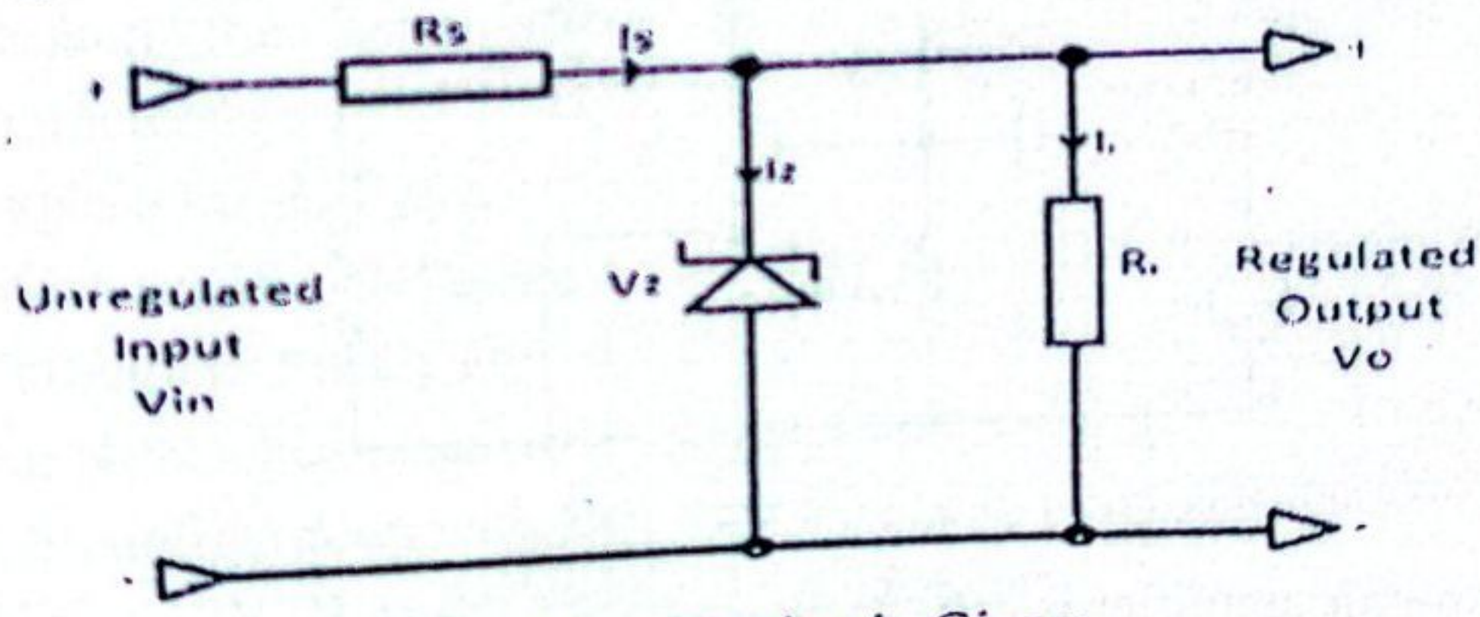

2. a) Find Q point for the following circuit. Given: 7

Vcc = 16V
R_1 = 62K
R_2 = 9.1K
R_C = 3.9K
R_E = 1K
β = 80

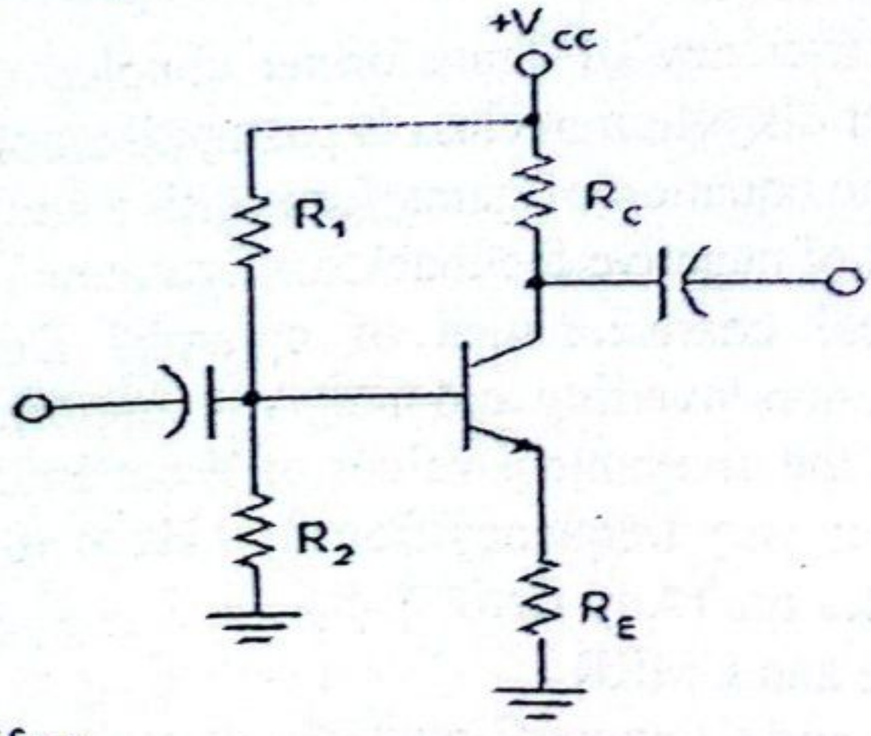

b) Explain BJT as an amplifier. 4

c) Compare CB, CE and CC configurations. 4

3. a) Define rectification. Explain that the efficiency of full wave rectifier is 8

double of the half wave rectifier.

b) Draw the wave form of voltage across R_L. Assume Vin = 10 sin wt Volts. Also explain the operation to support your waveform. 7

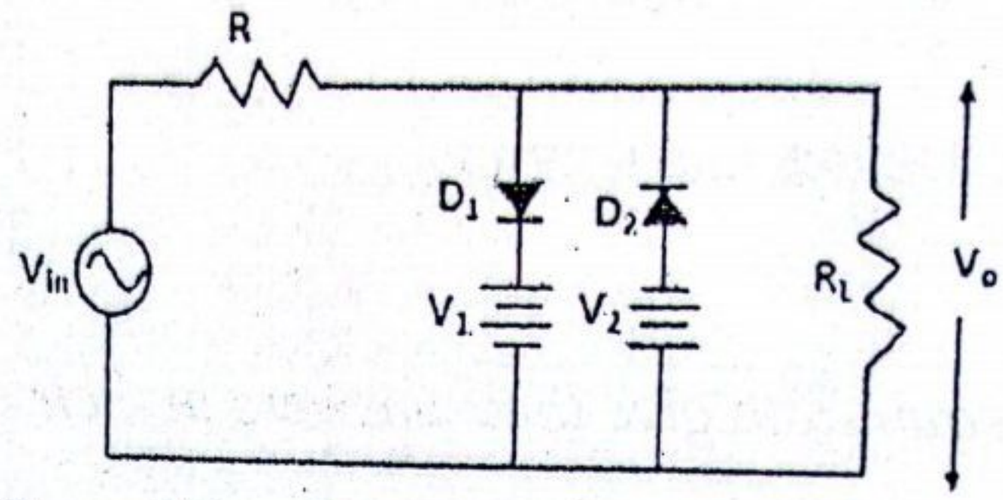

4. a) For the given CE amplifier, find the following using r_e model 8

i. input impedance

ii. output impedance

iii. voltage gain

(Assume $\beta = 90$, $V_{CC} = +19V$)

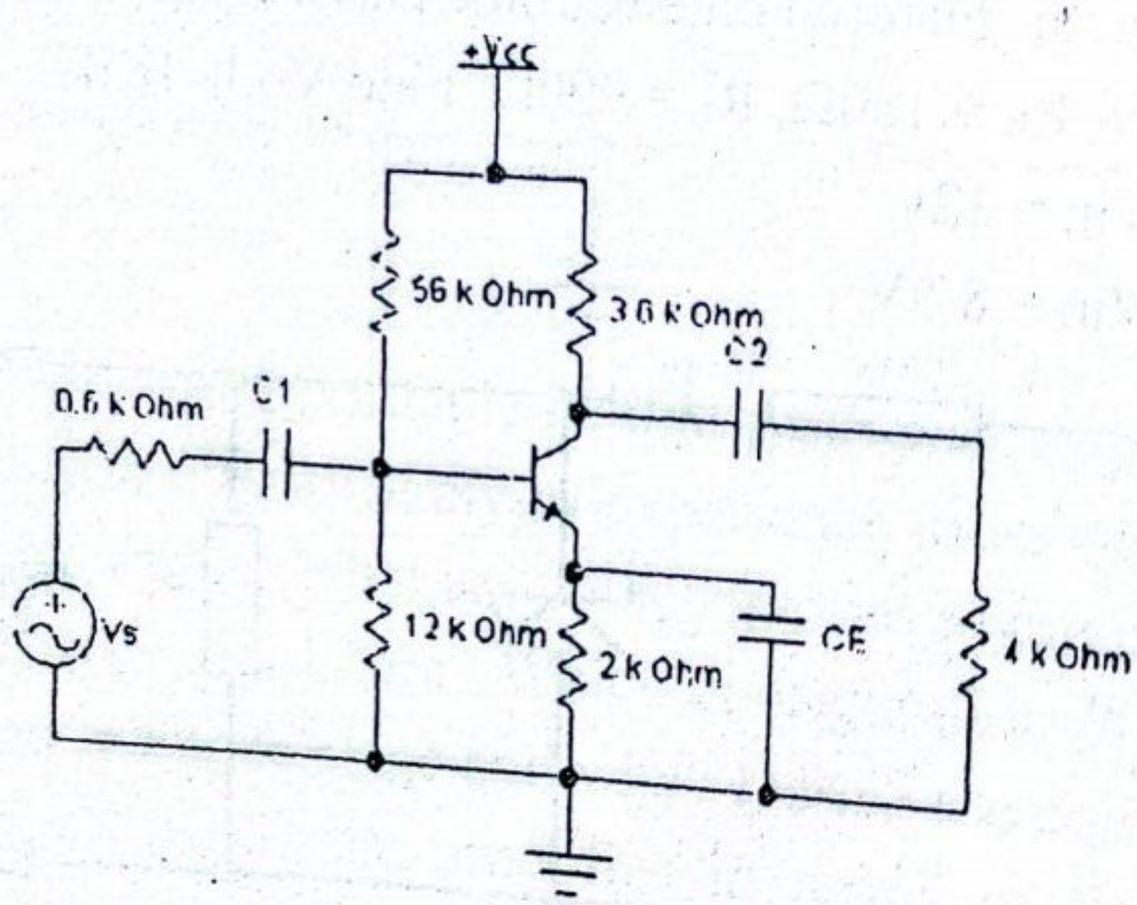

b) Darlington-pair amplifier is called Super beta why? Derive the necessary expression for it. 7

5. a) Derive efficiency of Transformer coupled Class A amplifier? Explain cross over distortion in class B push pull amplifier. 8

b) Derive the equation of gains for positive and negative feedback. Explain the effect of negative feedback configuration in amplifier characteristics. 7

6. a) State Ideal characteristics of op-amp? Derive closed loop gain of inverting, non inverting and integrator amplifier? 8

b) Calculate the component values of Wein Bridge Oscillator to be used in oscillator to vary frequency from 100 Hz to 10 kHz in two stages. 7

7. Write short notes on: **(Any two)** 2×5

a) Slew Rate and CMRR

b) Clamping and Clipping Circuit

c) JFET Parameters

POKHARA UNIVERSITY

Level: Bachelor
Programme: BE
Course: Electronic Devices and Circuits

Semester: Spring

Year : 2016
Full Marks: 100
Pass Marks: 45
Time : 3hrs.

Candidates are required to give their answers in their own words as far as practicable.

The figures in the margin indicate full marks.

Attempt all the questions.

1. a) Differentiate between Diffusion Capacitance and Transition Capacitance. "Transition capacitance is inversely proportional to the square root of the reverse voltage applied across it." Verify this statement. 3+5

   b) Explain the Zener diode as a voltage regulator with its I-V characteristics. 7

2. a) Explain the BJT as a switch. 5

   b) What are the Delay time and Rise time? Briefly explain the Reach Through or Punch Through effect. 2+3

   c) An NPN silicon transistor having a nominal β of 100 is to be used in a CE configuration with Vcc = 15 V. The Q point is to be Ic = 4mA and VcE = 12V. Now design the circuit diagram. 5

3. a) What do you mean by voltage regulation? Explain with the block diagram. 7

   b) What is pinch off voltage? Compare the JFET with BJT. 2+6

4. a) For the amplifier circuit given below find: 8

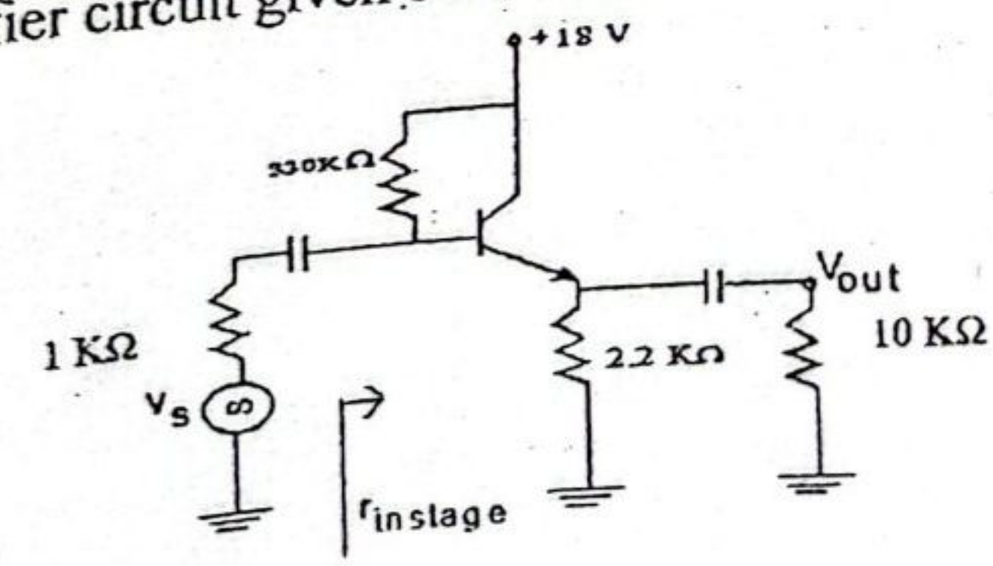

   i. r_{in} ii. r_{out} iii. A_v iv. A_{vs}

   Where the symbols have their usual meanings. (Given β = 100, r_e = 20Ω).

b) What are the different coupling methods? Briefly explain the RC coupled amplifier. 2+5

5. a) "Efficiency of direct coupled load Class A amplifier is half of the Collector Efficiency". Verify with necessary derivations. 8

b) An amplifier has an input 20mV and a gain of 150 without the feedback. The distortion produced at the output of the amplifier is 10%. It is desired to reduce the distortion to 2% by using the negative feedback. Calculate the gain and the output voltage with the feedback. 7

6. a) What are the essential condition for oscillation? Design a Wien bridge oscillator that will oscillate at 50 KHz. 2+6

b) Design an adder circuit using op-amp to get the output expressions as: 7

$V_{out} = -2V_1 + 5V_2 - 20V_3 + 10V_4$

Where V_1, V_2, V_3, V_4 are the inputs. Assume $R_f = 50K\Omega$.

7. Write short notes on: **(Any two)** 2×5

a) Rectifier

b) DMOSFET and EMOSFET

c) Emitter Follower

सुगम स्टेसनरी सप्लायर्स एण्ड फोटोकपी सर्भिस
बालकुमारी, ललितपुर ९८४१५९९५९२
NCIT College

POKHARA UNIVERSITY

Level: Bachelor
Programme: BE
Course: Electronic Devices and Circuits

Semester: Fall

Year : 2015
Full Marks: 100
Pass Marks: 45
Time : 3hrs..

Candidates are required to give their answers in their own words as far as practicable.

The figures in the margin indicate full marks.

Attempt all the questions.

1. a) Draw V-I characteristics curve of pn junction diode Distinguish between a zener breakdown and avalanche breakdown. 8

   b) Differentiate between intrinsic and extrinsic semiconductor. A silicon diode has saturation current of 5 nanoampere at room temperature. What is the saturation current at 100 degree centigrade. 7

2. a) Calculate the current through load resistor and zener diode. 7

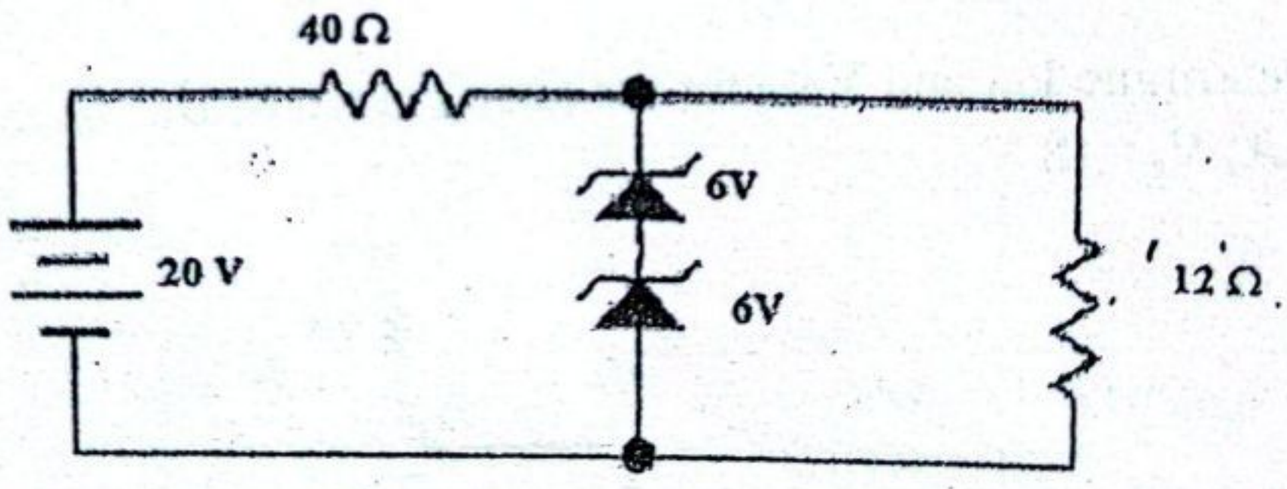

   b) For the transistor amplifier shown below given that Vcc=22 V. 8

      i. Draw dc load line.

      ii. Operating point.

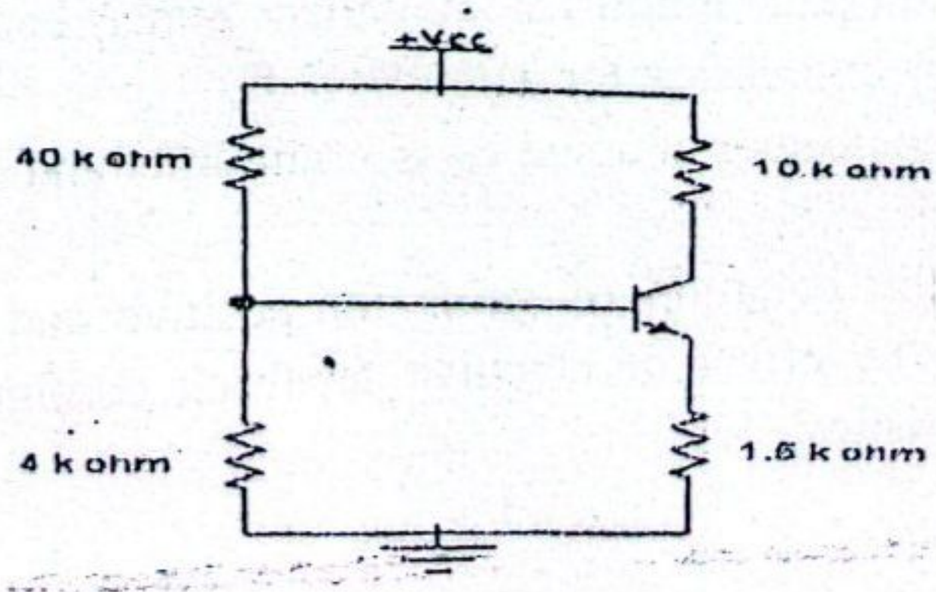

3. a) Explain the input characteristics of Common emitter transistor. Also derive the relationship between α, β, and γ. 7

b) Sketch the output waveform for the circuit shown below. 8

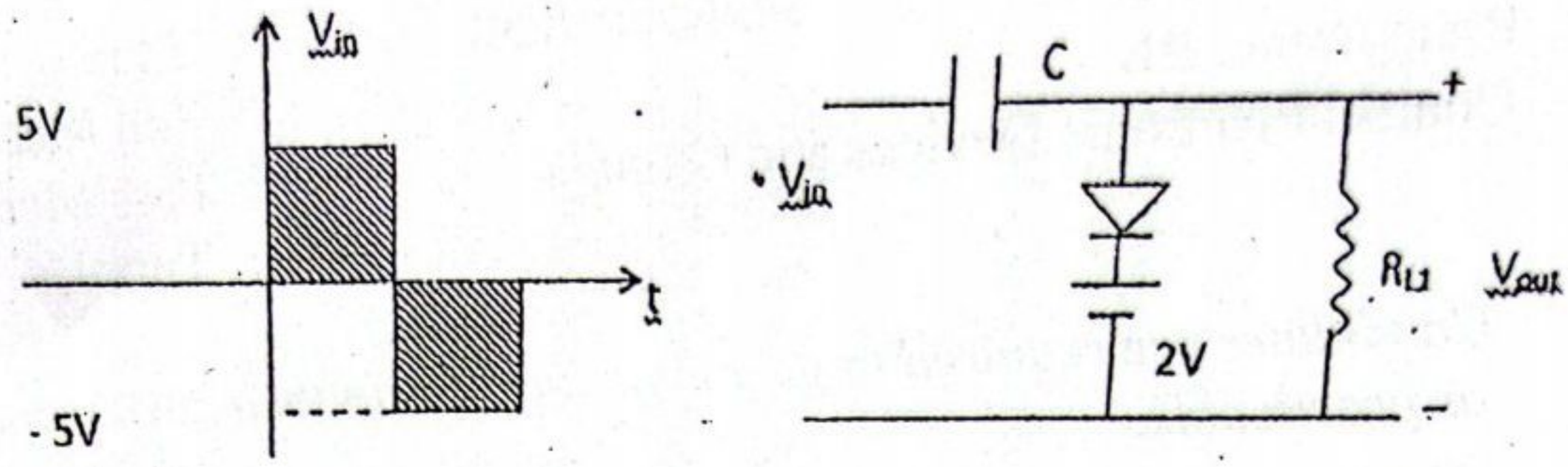

4. a) Find A_{vs}, A_v, Z_0, Z_{in} of following Ckt. Diagram using h- parameter. 8

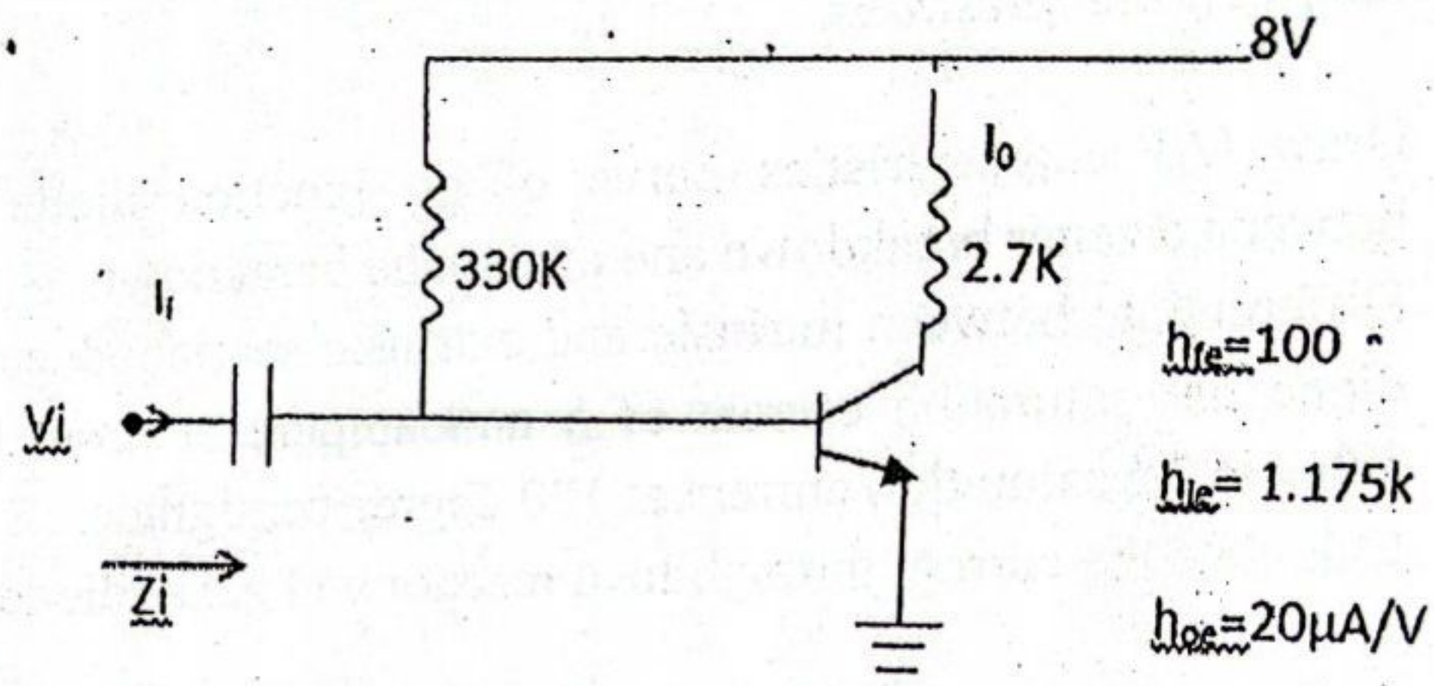

b) Determine I_{DQ} and V_{DSQ} for the circuit given below. Given I_{DSS} = 8 mA, V_P = -8 V. 7

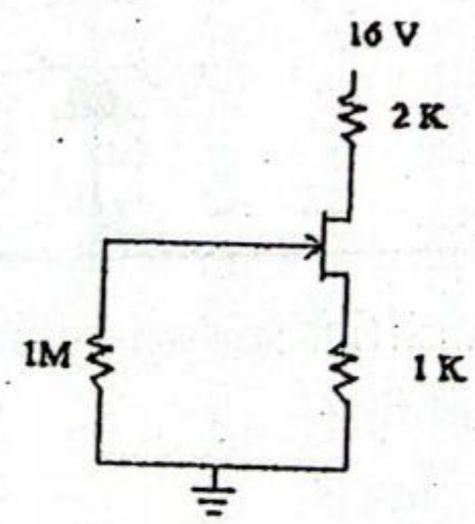

5. a) Darlington-pair amplifier is called Super beta why? Derive the necessary expression for it. 7

b) Draw transformer coupled class A amplifier and derive the expression of its efficiency. 8

6. a) Derive the equation of gains for positive and negative feedback. Explain the effect of negative feedback configuration in amplifier characteristics. 7

b) For the op-amp based wein bridge oscillator if the component values are: 8

$R=5.1k\Omega$, $C=1nF$ $R_3=12k\Omega$ and $R_4=5.1k\Omega$

i. Determine whether the circuit will oscillate or not.

ii. Obtain the output frequency. 2×5

7. Write short notes on: **(Any two)**

a) Crystal Oscillator.

b) Emitter Follower.

c) Input impedance.

POKHARA UNIVERSITY

Level: Bachelor | Semester: Spring | Year : 2015
Programme: BE | Full Marks: 100
Course: Electronic Device and Circuits | Pass Marks: 45
Time : 3hrs.

Candidates are required to give their answers in their own words as far as practicable.
The figures in the margin indicate full marks.
Attempt all the questions.

1. a) What happens when a forward biased diode is suddenly reverse biased? Explain with necessary diagrams. 5

   b) What do you mean by dynamic resistance of diode? Show that dynamic resistance of diode $r_D=\eta V_T/I$. 5

   c) Determine the range of values of Vin that will maintain the zener diode in the "ON" state. Also find the maximum power that can be dissipated to the diode. 5

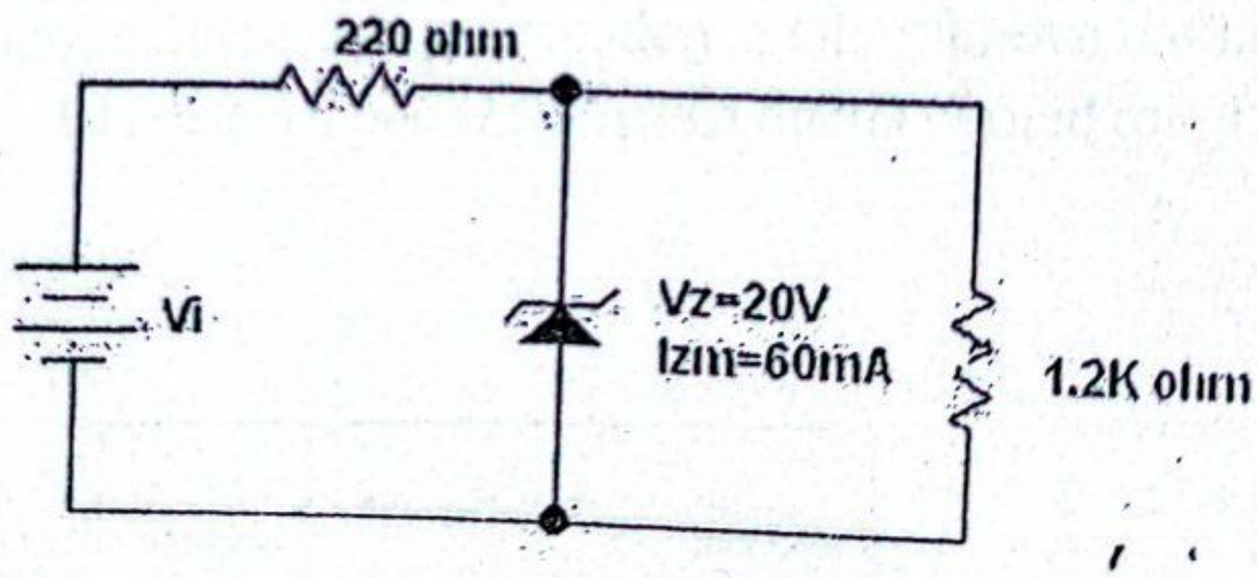

2. a) Explain the working principle of NPN transistor with necessary diagram. Show that $I_C=\beta I_B+(\beta+1)I_{CBO}$. 8

   b) For the circuits shown below, draw the dc load line and find the operating point. Also find the stability S of the circuit. (Assume silicon transistor with $\beta=100$) 7

A'

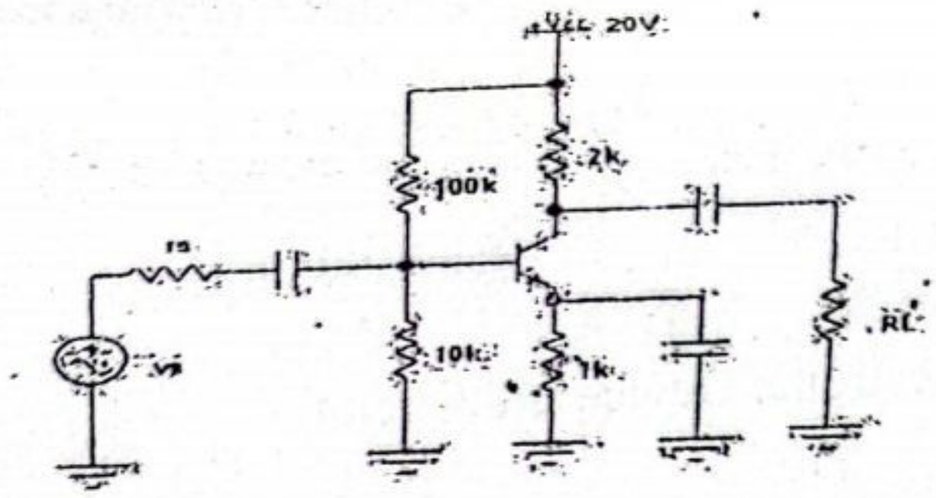

3. a) Explain the operation of Centre-Tap full wave rectifier. Find its efficiency, ripple factor and PIV. 8

b) Draw the output waveform (assume silicon diode). 7

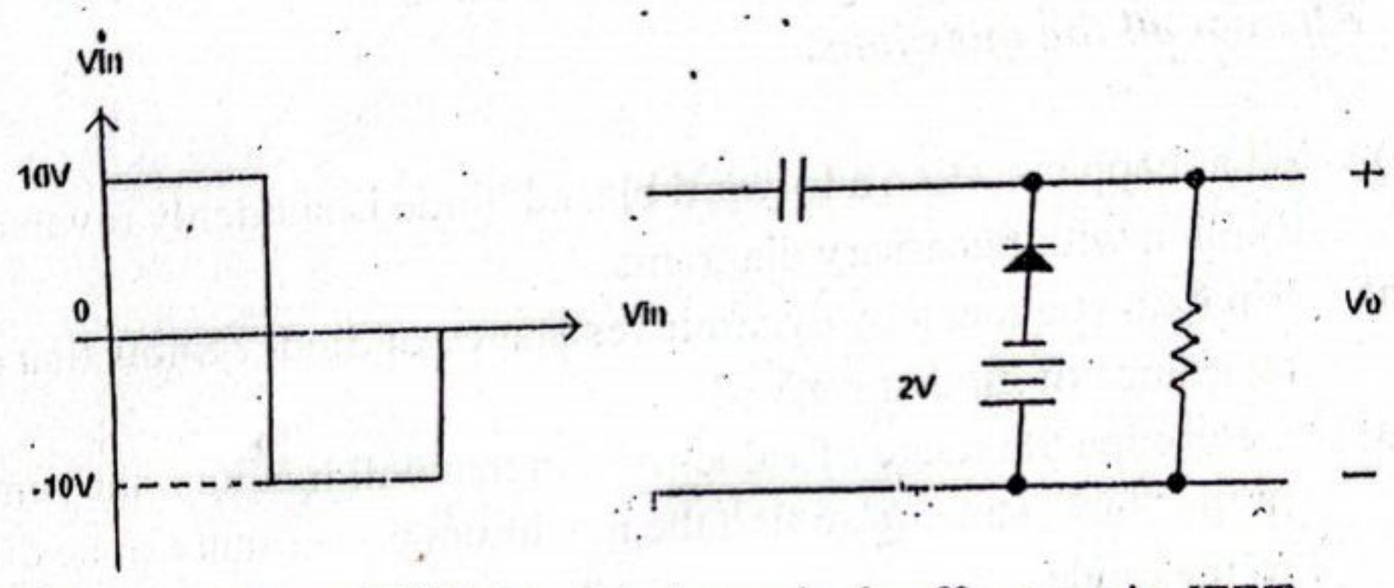

4. a) Compare BJT and FET. Explain how pinch-off occurs in JFET. 7

b) Find the overall voltage gain of cascaded transistor amplifier as shown in figure below. Given $r_{e1}=r_{e2}=25\Omega$ and $\beta 1=\beta 2=110$. 8

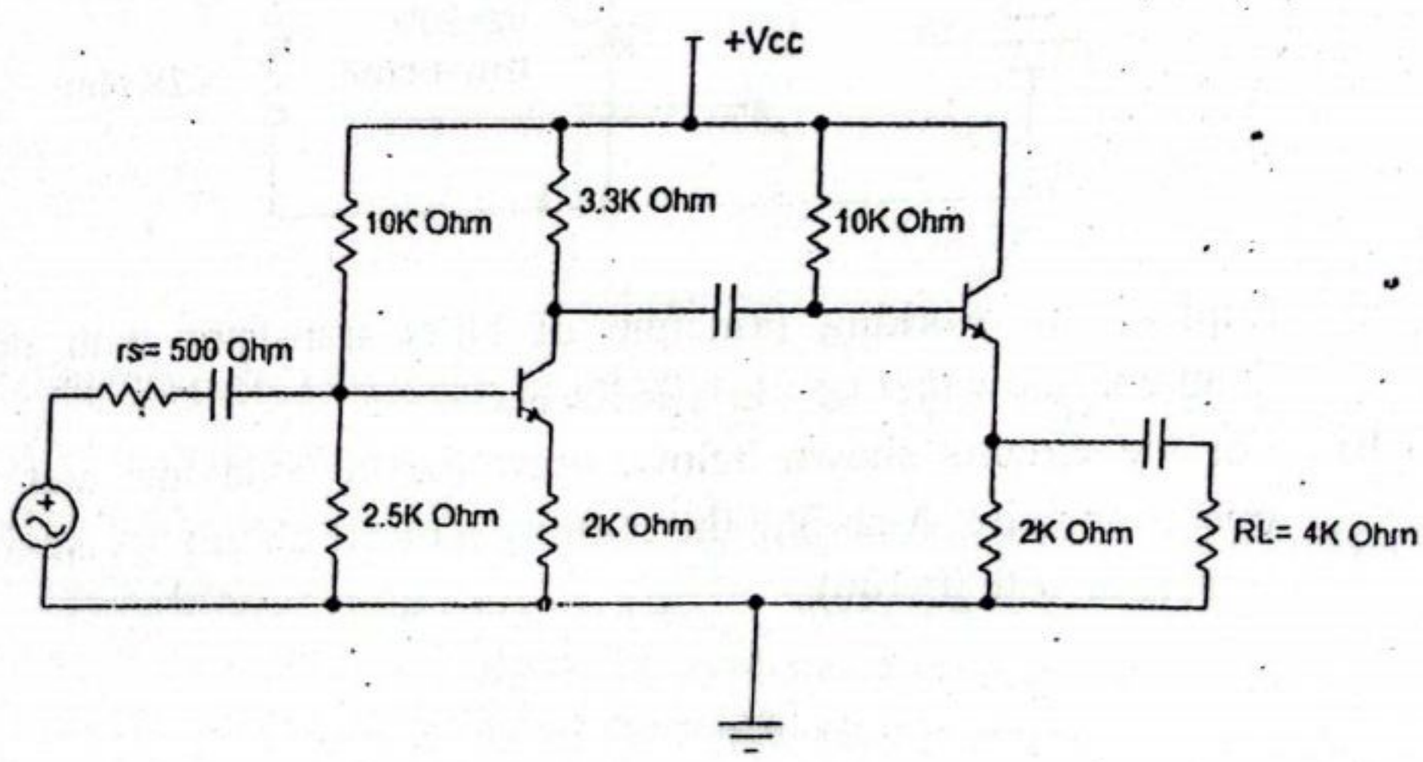

5. a) What do you mean by class A amplifier. Find the maximum efficiency of class A amplifier with resistive load. 2+6

b) What do you mean by feedback amplifier? Show that negative feedback improves the stability of an amplifier. 2+5

6. a) What are the conditions for oscillations? Draw a Wien-bridge Oscillator and explain its operation. 5

b) What do you mean by Operational Amplifier? Compare the characteristics of Ideal and practical Operational Amplifiers. 5

c) Design an Operational Amplifier circuit to produce the following Output. 5

$V_O = 3V_1 + 2V_2 - 0.5V_3$. Where V_1, V_2, V_3 are inputs and V_O is an output.

7. Write short notes on: (**Any two**) 2×5

a) Effect of Bypass Capacitor on voltage gain of CE amplifier

b) Darlingtone Pair

c) Cross over Distortion

B'

POKHARA UNIVERSITY

Level: Bachelor | Semester: Fall | Year : 2014
Programme: BE | Full Marks: 100
Course: Electronic Devices and Circuits | Pass Marks: 45
Time : 3hrs.

Candidates are required to give their answers in their own words as far as practicable.

The figures in the margin indicate full marks.

Attempt all the questions.

1. a) What do you mean by the junction breakdown of a diode? Distinguish between a Zener Breakdown and avalanche breakdown. 8

   b) Draw ideal and piecewise linear model of diode. For the silicon diode, the reverse saturation current is 20 μA at 27 degree centigrade. What will be the value of reverse saturation current at 87 degree centigrade? 7

2. a) Discuss the biasing required for various modes of operation of BJT. Find Q Point or operating point (V_{CE}, I_C) for the circuit given. Assume $\beta = 100$. 8

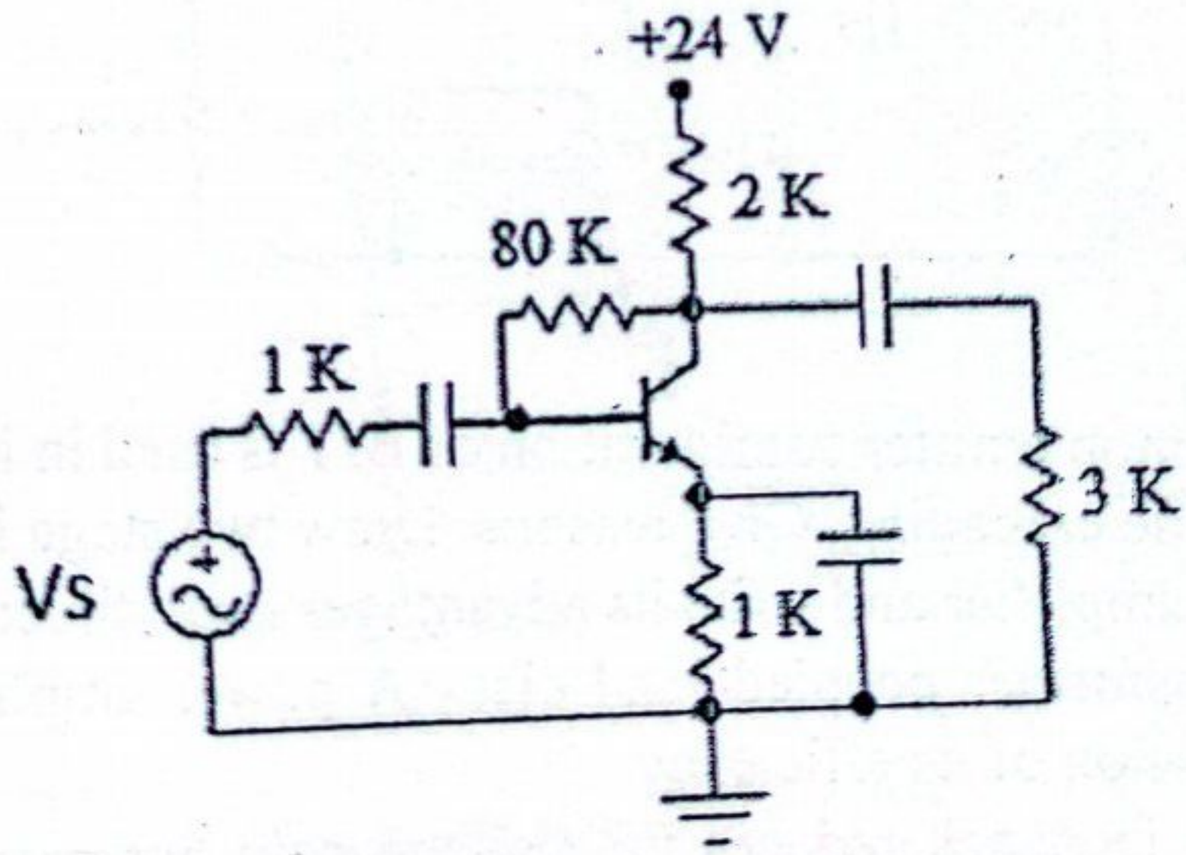

   b) Explain the working principle of NPN transistor. Also find the relation between α and β. 7

3. a) Draw the output waveform (assume silicon diode).

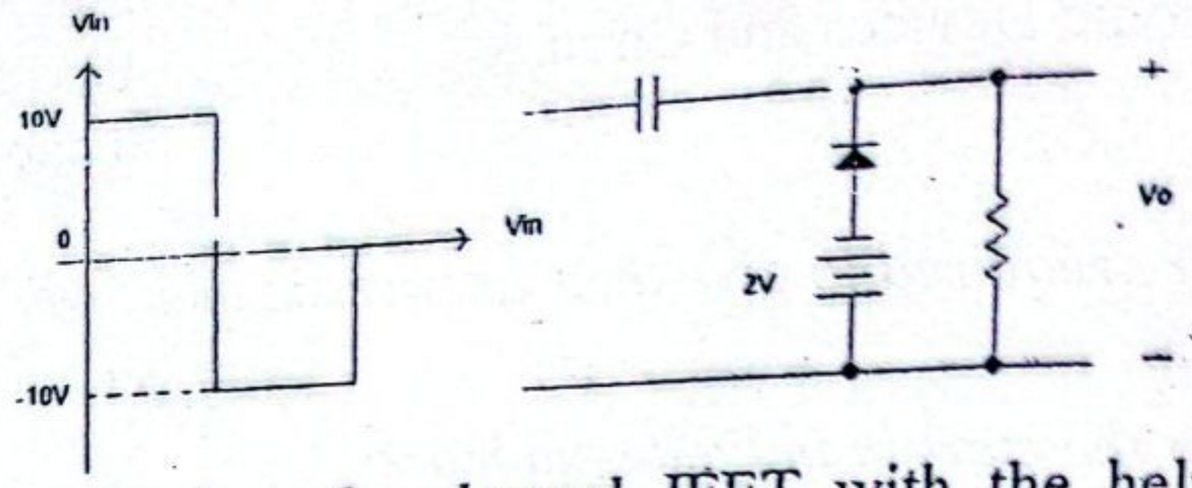

8

b) Explain the operation of n-channel JFET with the help of output characteristic curve and necessary derivations.

4. a) For the given CE amplifier, find the following using r_e model 8

i. input impedance

ii. output impedance

iii. voltage gain and current gain

(Assume $\beta = 100$, $V_{CC} = +20V$)

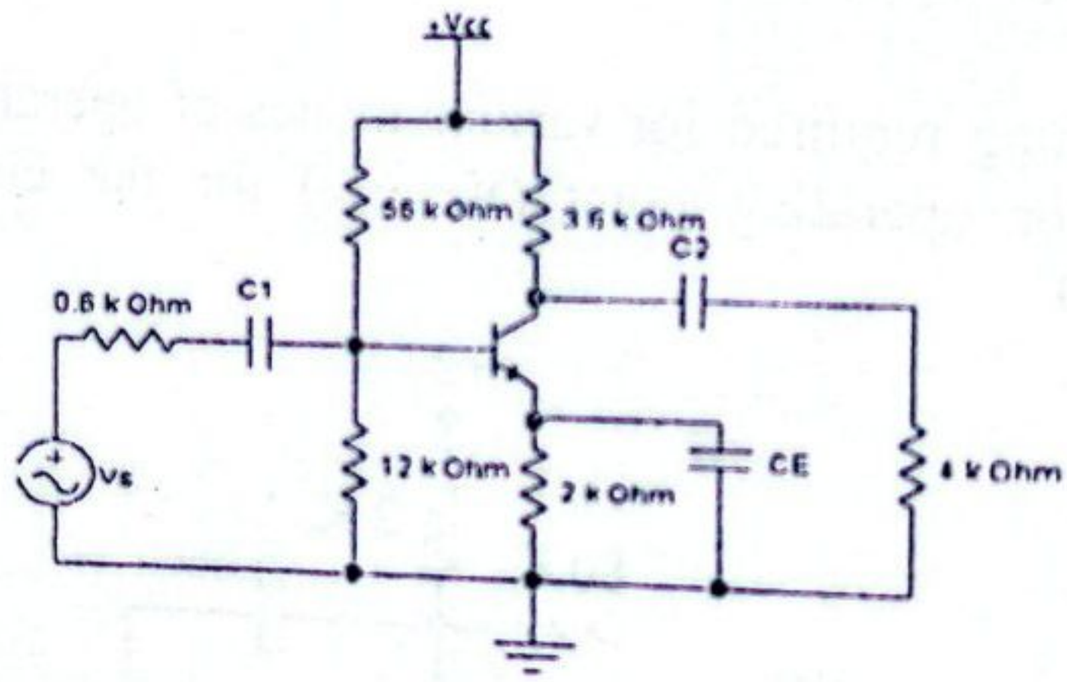

b) Why common emitter configuration of BJT is used in intermediate stages while cascading. Give reasons. Draw two stage RC coupled transistor amplifier and write its advantages over direct coupling. 7

5. a) Draw transformer coupled load class A power amplifier and derive the Expression of its efficiency. 8

b) "Negative feedback reduces the voltage gain but provides the better stability". Justify this statement. 7

6. a) What are the main ideal properties of operational amplifier?. Design an operational amplifier circuit that will produce an output voltage equal to $4 V_1 - 5 V_2 - 0.2 V_3$. Define CMRR. 8

b) What are the Barkhausen criteria for the oscillation?. Design a Wein Bridge oscillator circuit that will oscillate at 25 Khz. 7

7. Write short notes on: **(Any two)** 2×5

a) Emitter follower

b) Cross over Distortion

c) Depletion type MOSFET.

POKHARA UNIVERSITY

Level: Bachelor
Programme: BE
Course: Electronic Devices and Circuits

Semester: Spring

Year : 2014
Full Marks: 100
Pass Marks: 45
Time : 3hrs.

Candidates are required to give their answers in their own words as far as practicable.

The figures in the margin indicate full marks.

Attempt all the questions.

1. a) What is junction Breakdown? Compare Zener breakdown with avlanche breakdown. 8

   b) What is V-I characteristics of diode? Explain the effects of temperature in V-I characteristic curves. 7

2. a) Determine I_{CQ}, V_{CEQ} and I_{BQ} for the network shown below. Take β =80. 7

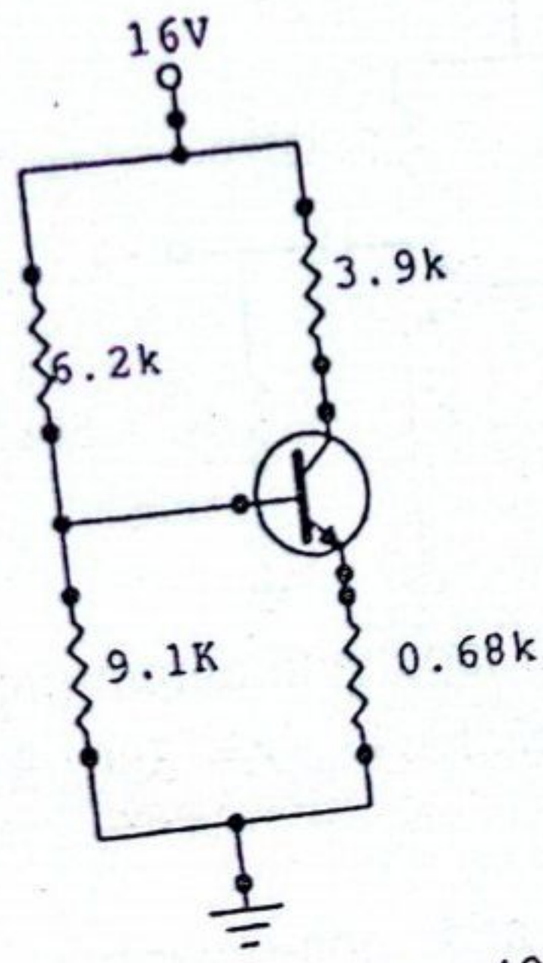

   b) An L section filter with L= 2 H and C = 40μF is used in the output of a full wave single phase rectifier that is fed from a 40-0-40V peak transformer. The load current is 0.2 A. Calculate the ripple factor. Assume that the rectifier diodes are ideal. Show the circuit diagram. 8

3. a) Determine the expression for Ai, Zi, Av & Yo for the two port transistor network shown below in terms of h parameters. 8

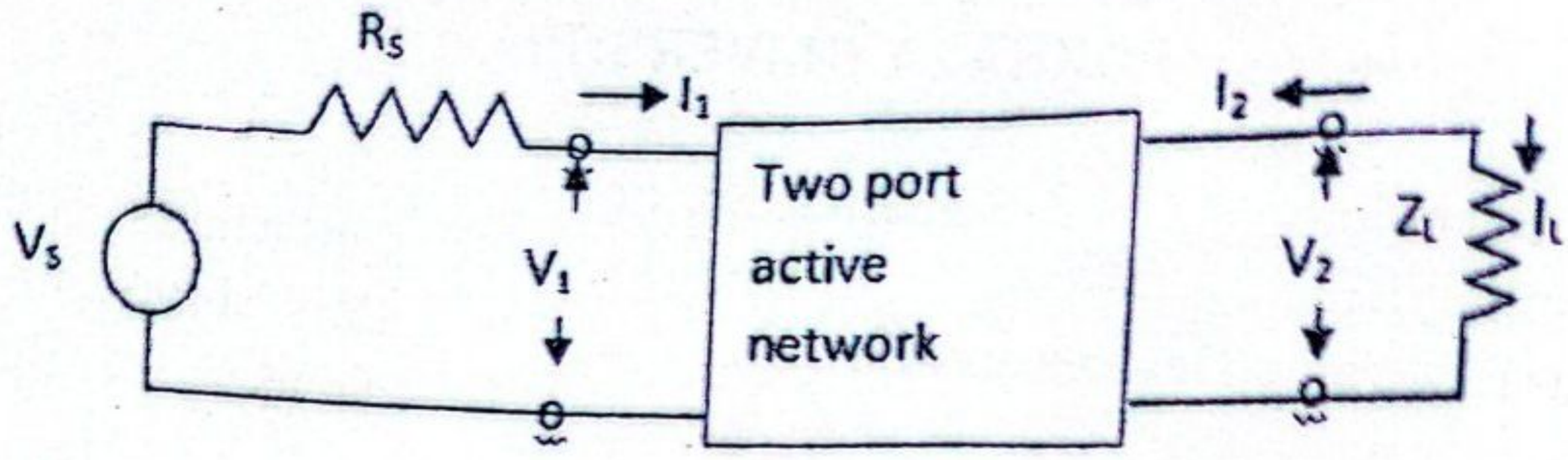

b) Darlington-pair amplifier is called Super beta Why? Derive the necessary expression for it. 7

4. a) Explain the construction and working of EMOSFET with its circuit and characteristic curve. 7

b) What do you mean by power amplifier? Explain the operation of push-pull amplifier with output transformer, with the help of diagram. 8

5. a) The Class-A amplifier shown in figure is biased at V_{eq} = 12V. The output voltage is the maximum possible without distortion. Find, 8

i. The average power from dc supply.

ii. The average power delivered to load from each supply.

iii. Power conversion efficiency.

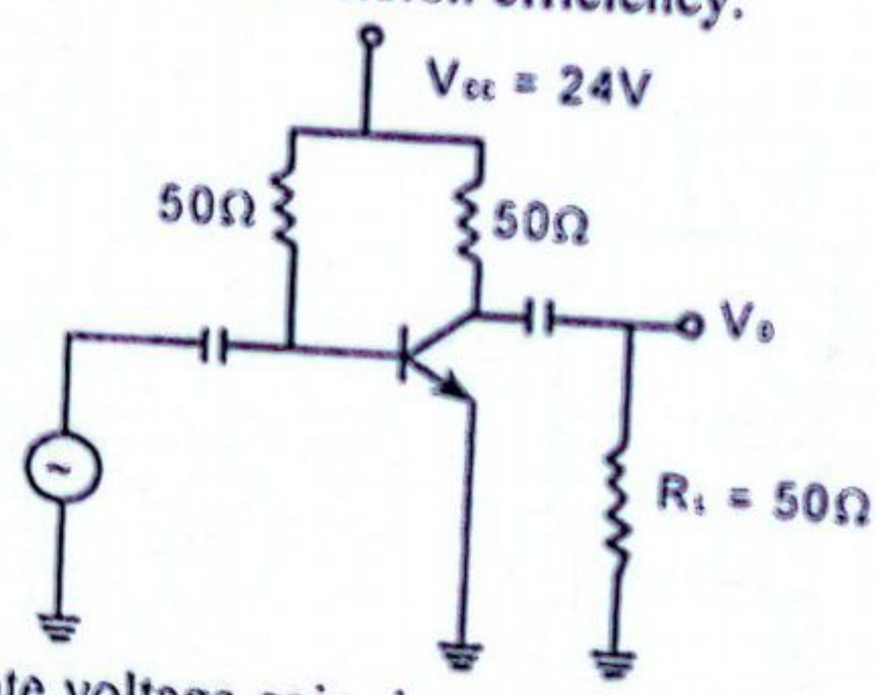

b) Calculate voltage gain, input and output impedance with feedback for voltage series feedback having A= 300, R_i=1.5KΩ, R_o=50 KΩ and β=1/15. 7

6. a) What are inverting and non-inverting amplifiers? Derive the expression for output voltage of integrator and summing amplifier. 7

b) What is the Barkhausen Criterion for Oscillation? Design a RC phase shift oscillator to operate at a frequency of 5KHZ. 8

7. Write short notes on: **(Any two)** 2×5

a) Regulated and unregulated power supplies.

b) Boost regulators.

c) CMRR.

POKHARA UNIVERSITY

Level: Bachelor
Programme: BE
Course: Electronic Devices and Circuits

Semester: Fall

Year : 2013
Full Marks: 100
Pass Marks: 45
Time : 3hrs.

Candidates are required to give their answers in their own words as far as practicable.
The figures in the margin indicate full marks.
Attempt all the questions.

1. a) Draw ideal model and piecewise linear model of diode. For the silicon diode, the reverse saturation current is 20μA at 27 degree centigrade. What will be the value of reverse saturation current ar 100 degree centigrade? 8

   b) Distinguish between zener breakdown and avalanche breakdown. The circuit shown uses two zener diodes, each rated at 10V, 180 mA. If the circuit is connected to a 45 V unregulated power supply. Determine: 7

      i. The value of series resistance (R).
      ii. Maximum power dissipation across each zener diode.

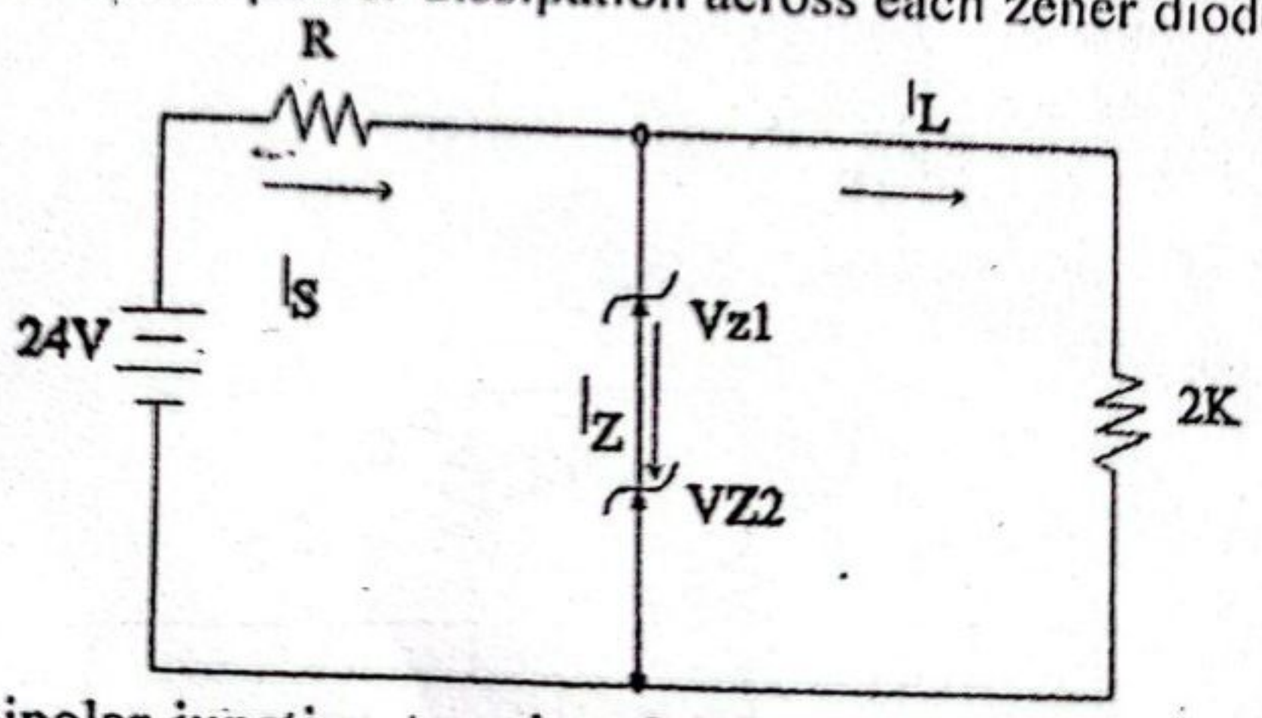

2. a) What is bipolar junction transistor? Why it is so called? Explain the working principle of NPN transistor with necessary diagram. 8

   b) A Germanium transistor is used in the self bias arrangement with Vcc=20V, Rc=3K, R_E=2K, R1=50K, R_2=20K, α=0.985. Determine: 7

      i. The operating point
      ii. The stability factor.

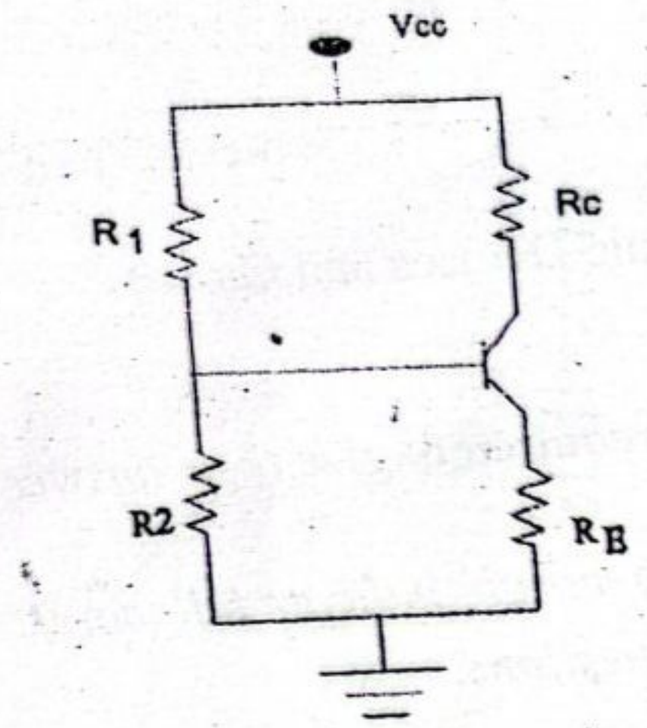

3. a) Draw full wave bridge rectifier circuit and explain its operation. Compare half-wave & full wave rectification in terms of efficiency and ripple factor. 8

b) Compare BJT and FET. Describe the working principle of n-channel JFET. 7

4. a) "The CC configuration of BJT is also called as Emitter followers," Justify your answer with the help of necessary derivations. Derive the expression for input, output resistances and voltage gain. 7

b) The Transistor shown in figure below has the following h- parameter values as $h_{ie} = 1K\Omega$, $h_{re} = 2.5 \times 10^{-4}$, hfe=50, hoe=25 μs. Find: 8

i. Input impendance Zin
ii. Voltage gain Av
iii. Current gain Ai
iv. Output impendance Z_{out}.

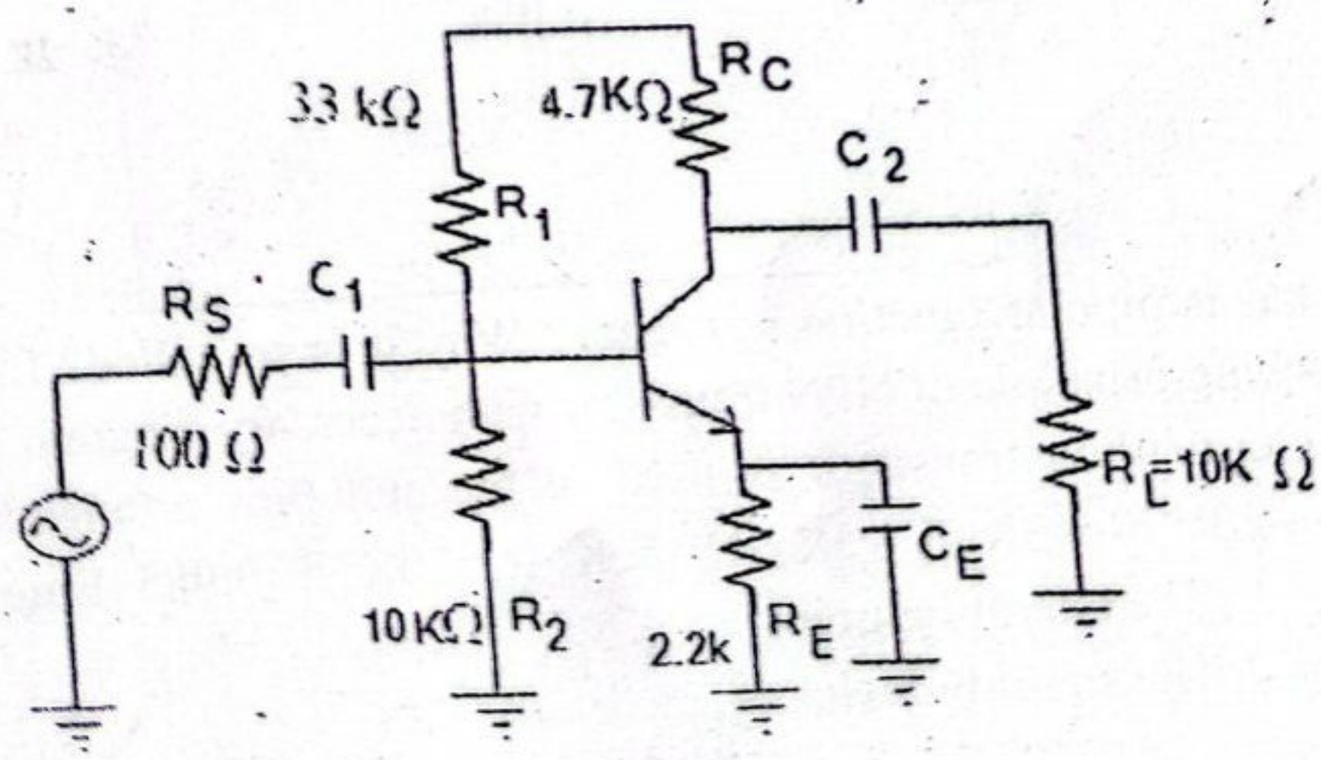

5. a) What is multistage amplifier? Explain working principle of RC coupled transistor amplifier with circuit diagram? 8

b) What are the ideal characteristics of operational amplifier? Design differential amplifier circuit to produce an output. 7

$$V_0 = 5(V_2 - V_1)$$

6. a) What do you understand by class A, class B and class C amplifiers? Also explain push-pull amplifier with circuit diagram. 8

b) Explain the advantages and disadvantages of negative feedback. A negative feedback of 0.2% is applied to an amplifier gain of 60 dB. Calculate the percentage change in the overall gain of the feedback amplifier if the internal amplifier is subjected to gain reduction of 15%. 7

7. Write short notes on: (Any two) 2×5

a) Astable Multivibrator.

b) Pi Filter.

c) Application of JEFT.

EDC-13F