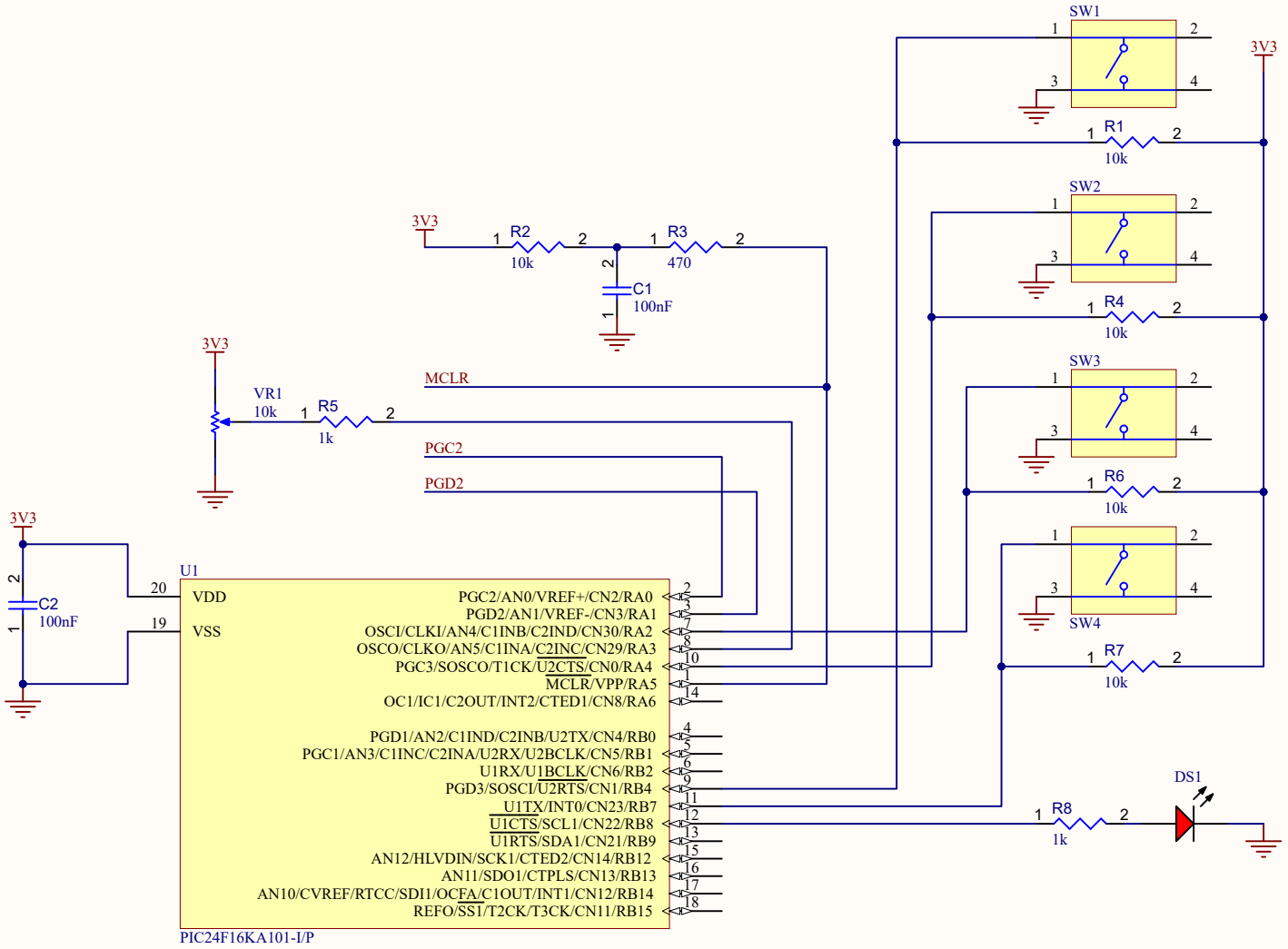

Title	Driver Project 4	
Size A4	Number	Revision
Date: 11-25-2021		Sheet of
File: C:\Users\..\driver-project-4.SchDoc		Drawn By: Nestor Chacin