CITY OF BRADENTON DEVELOPMENT PERMIT APPLICATION

101 Old Main Street, Bradenton, FL 34205

Phone: 941-932-9414 | Email: permitting@bradentonfl.gov

Permit Number _____ **Site Improvement Plan #** _____

Related Permit #_____ **Stop Work Order:** ___**Yes** ___**No**

___**Accessory Structure**
___**Aluminum**
___**Antenna**
___**Commercial (New)**
___**Commercial (Add/Alt)**
___**Concrete**
___**Deck/Stairs**
___**Demolition**
___**Driveway/Sidewalk**
___**Dumpster**
___**Electrical and/or Low Voltage**
___**Exterior Door & Window**
___**Fence**
___**Generator**
___**Mechanical and/or Gas**
X__**Mobile Home or Modular**
___**Plumbing**
___**Residential (New)**
___**Residential (Add/Alt)**
___**Roof**
___**Siding/Soffit/Fascia**
___**Sign**
___**Solar**
___**Swimming Pool/Spa**
___**Tent and/or Temp Use**
___**Waterfront**
___**Other**

COST OF CONSTRUCTION $ 122,163.00 **PARCEL I.D. #** 4456414400

JOB ADDRESS: 1704 27TH AVE W, BRADENTON, FL 34205-6304

PROPERTY OWNER: BLACK, ALLAN JOSEPH **PHONE**_____ **EMAIL**_____

BUSINESS/SUBDIVISION/MH PARK: BRADENTON TROPICAL PALMS **LOT** 1704 **BLOCK**_____

DESCRIPTION OF WORK: MOBILE HOME INSTALL 15'4" X 42'Replacement

***ADDITIONAL WORK REQUIRED:** X__**ELECTRICAL** X__**MECHANICAL** X__**PLUMBING** ___**GAS** ___**MASONRY** ___**CONCRETE** ___**ROOFING**

Zoning District: _____

****PRIVATE PROVIDER**** (Name): _____

BUILDING: Flood Zone _____ New (sq. ft.) _____ Adding (sq. ft.) _____ Renovating (sq. ft.) _____

FBC Occupancy Type: _____ FBC Construction Type: _____ # of Stories: 1 Building Height: 15'

Area per Story _____ Area Under A/C 630 # of Bedrooms 2 # of Bathrooms 1 # of Units 1

CONTRACTOR: KENNTH KINNEY JR **STATE CERT./REG. #** IH1126379

AGENT/CONTACT PERSON NANCY ARMSTRONG/ SEAN SWONGER **PHONE** 863-529-2370

EMAIL Nancyarmstrong61@gmail.com / sdswonger@gmail.com

DATE 3/15/24 **SIGNATURE** Sean Swonger **PRINT NAME** Sean Swonger

OFFICIAL USE ONLY:

REVIEW: BLDG_____**MECH**_____**ELEC**_____**PLMB**_____**FIRE**_____**ZONING**_____**FLOOD**_____**PW**_____

Application is hereby made to obtain a permit to do the work and installations as indicated. I certify that no work or installations have commenced prior to the issuance of a permit and that all work will be performed in accordance with the standards of all laws and ordinances regulating construction in The City of Bradenton, Florida, whether specified herein or not. I understand that a separate permit may be required to perform electrical, plumbing, sign, well, pool, furnace, boiler, heater, air conditioning, storage tank, demolition or any other types of work as specified by The City of Bradenton. I further certify that I have read and examined this application and know the same to be correct, that all work shall be in compliance with the Florida Building Code 8th Edition, 2023, the National Electric Code 2020 and all applicable laws regulating construction and zoning, and that the building permit may be revoked in the case of a false statement or misrepresentation in the application and/or plans on which the permit was approved.

It shall also be agreed that the owner has been advised of and understands the applicability of the Construction Lien Law (FSS 713.135) and that Impact Fees shall be determined with the application for a building permit and shall be due before Final Inspection. Permit Fees shall be payable at issuance of a building permit.

WARNING TO OWNER: YOUR FAILURE TO RECORD A NOTICE OF COMMENCEMENT MAY RESULT IN YOUR PAYING TWICE FOR IMPROVEMENTS TO YOUR PROPERTY. A NOTICE OF COMMENCEMENT MUST BE RECORDED AND POSTED ON THE JOB SITE BEFORE THE FIRST INSPECTION. IF YOU INTEND TO OBTAIN FINANCING, CONSULT WITH YOUR LENDER OR AN ATTORNEY BEFORE COMMENCING WORK OR RECORDING YOUR NOTICE OF COMMENCEMENT.

PLEASE SIGN BELOW*(Note: Only one signature is required. The Owner only signs if acting as Owner-Contractor.)*

Owner As Contractor
Signature: _____ Print Name: _____

Contractor
Signature: _____ Print Name: _____

Authorized Agent
Signature: Sean Swonger Print Name: Sean Swonger

Date: 3/15/24

STATE OF FLORIDA
CITY OF BRADENTON

The foregoing instrument was acknowledged before me by means of ✔ physical presence or ___ online notarization this 15 day of March, 2024, by Sean Swonger, who is personally known to me or who has produced as identification DL Expiration Date: _____ and who did/did not take an oath.

Notary Public Signature Nancy Armstrong **Notary Public Stamp Here**

NANCY MIMS ARMSTRONG
Commission # HH 447144
Expires September 24, 2027

MANATEE COUNTY
PROPERTY APPRAISER
CHARLES E. HACKNEY

Property Record Card

Created at: https://www.manateepao.gov on January 13, 2024

Parcel ID: 4456414400
Ownership: BLACK, ALLAN JOSEPH
Owner Type: INDIVIDUAL
Mailing Address: BLACK, ALLAN JOSEPH, 11 MAIN ST, SYDNEY NS B1P6Z8, CANADA

Situs Address: 1704 27TH AVE W, BRADENTON, FL 34205-6304
Jurisdiction: CITY OF BRADENTON
Tax District: 0021; CITY OF BRADENTON
Market Area: 10; WEST BRADENTON

Sec/Twp/Rge: 02-35S-17E
Neighborhood: 5129; BRADENTON TROPICAL PALMS
Cooperative: 4456400; BRADENTON TROPICAL PALMS CO-OP; LOT 1704

Parcel Type: REAL PROPERTY
Parcel Created: 02/27/1998
Map Number: 5B02

Land Use: 0055; CO-OP-VACANT LOT
Land Size: 0.0436 Acres or 1,899 Square Feet

DESCRIPTION

UNIT 1704 27 AW BRADENTON TROPICAL PALMS A RESIDENTIAL COOP PI#44564.1440/0

2023 FINAL CERTIFIED VALUES

	County	School	IndSpcDist	Municipality
Land Value:	25,500	25,500	25,500	25,500
Improvement Value:	0	0	0	0
Total Market Value:	25,500	25,500	25,500	25,500
Land Classified Agricultural:	0	0	0	0
Classified Use Value:	0	0	0	0
Classified Use Savings:	0	0	0	0
Ineligible for 10% Cap:	0	25,500	0	0
Eligible for 10% Cap Next Year:	0	0	0	0
Eligible for 10% Cap This Year:	25,500	0	25,500	25,500
10% Cap Savings:	7,931	0	7,931	7,931
Ineligible for SOH Cap:	25,500	25,500	25,500	25,500
Eligible for SOH Cap Next Year:	0	0	0	0
Eligible for SOH Cap This Year:	0	0	0	0
SOH Cap Savings:	0	0	0	0
Assessed Value:	17,569	25,500	17,569	17,569
Exempt Value:	0	0	0	0
Taxable Value:	17,569	25,500	17,569	17,569

ADDRESSES ASSIGNED TO THE PROPERTY

1704 27TH AVE W, BRADENTON, FL 34205-6304

PROPERTY APPRAISER INSPECTIONS

08/09/2021	TLW	INSPECTION BY IMAGE TECHNOLOGY	5 YEAR STATUTORY REVIEW
09/20/2016	JAH	ON SITE INSPECTION	5 YEAR STATUTORY REVIEW

LAND INFORMATION

#	Type	Code	Ag	Ex	Sqft	Acres	Rate	Value	Actual	Effect	Depth (Frontage)	Table (Frontage)	Factor (Depth)	Override (Depth)	Influences	Zoning
1	U	100	No	0%	1,899	0	30,000	25,500					1.0			BR_R-4

SALES INFORMATION

Salekey	Sale Date	Book/Page/Inst #	Instrument Type	V / I	Qual Code	Sale Price	Grantee	Grantor
2420494	4/10/2023	202341041896	LEASE ASSIGNMEN	V	01	$27,500	BLACK, ALLAN JOSEPH	BRADENTON TROPICAL PALMS INC
1535762	1/1/1931	UNRECORDED	UNKNOWN	V	37		BRADENTON TROPICAL PALMS INC	

Vinyl Skirting Installations

Installation Details

Careful attention to a few basic details will insure that your vinyl skirting will provide a beautiful, easily installed, completely accessible exterior with a minimum of maintenance. Vinyl skirting is easily installed over any terrain, requires no special tools and never needs painting. Following these basic installation techniques will assure that our skirting will contribute to the beauty of your home's exterior.

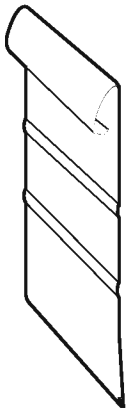

Top Trim Back Component

Tools you will need

Hammer • Screwdriver • Snips • Plumb Bob or Level • Tape Measure
Power Saw with Fine Tooth Blade • Snap Lock Tool • Chalk Line
• Utility Knife

Important

1) Use either a power saw with a fine tooth blade mounted with reverse rotation, or aviation snips to cut skirting components.

2) To allow for normal expansion and contraction, fasten the Top Trim Back component(s) in the center of the nailing slots. Fasten positively to the surface of the unit at every slotted hole, leaving 1/2" between lengths. **Do not butt the ends.** Overlap the Top Trim Front component(s) approximately 1" at joints. Allow 1/2" between pieces of the Bottom Channel component(s) when installing.

3) Do not drive the fasteners too tightly. Nails or screws offer excellent holding power, but if driven too tightly, the vinyl can, under normal expansion and contraction, become distorted. These fasteners should be driven in the middle of the nailing slot just short of touching the Top Trim Back component(s). Nail or screw to achieve 3/4" penetration into a solid wood substance. Fasten to allow part to expand and contract during the normal change in ambient temperature. **Do not fasten tight.** Allow 1/16" gap between fastener head and part.

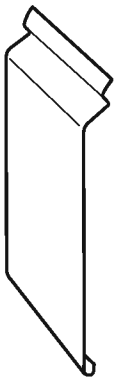

Top Trim Front Component

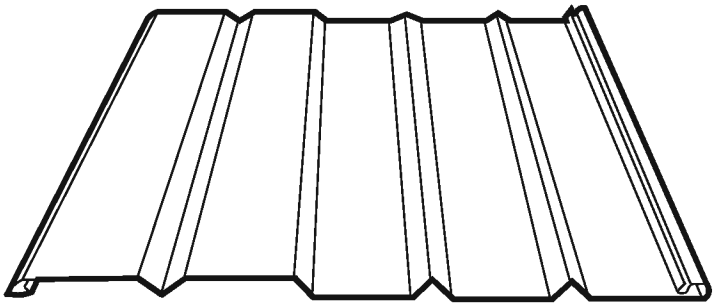

Skirting Panel

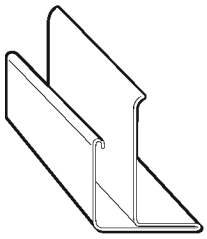

Bottom Channel Component

Vinyl Skirting Installations

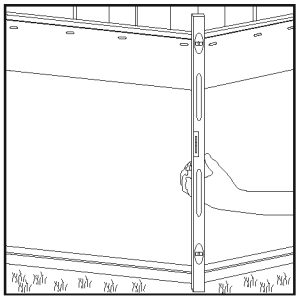

Figure 1

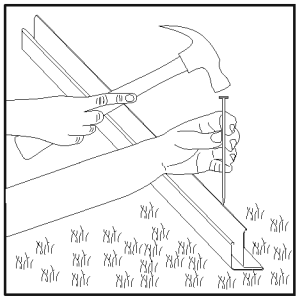

Figure 2

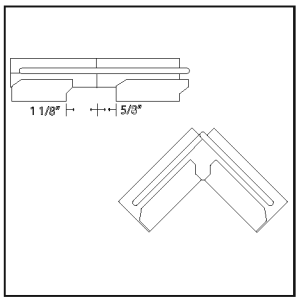

Figure 3

Step 1…

Laying the Bottom Channel Components

A level or plumb line should be used to establish the location of the Bottom Channel. The taller backside of the Bottom Channel should be located directly beneath the outside bottom edge of the home, where the Top Trim Back component will be attached *(see figure 1)*. To prevent grass from growing around the base of the skirting and provide a non-shifting base for the ground spikes, 9" asphalt roof starter should be installed around the home. The roof starter also reduces the possibility of the vinyl skirting panels being damaged from the use of a powered string trimmer. “Weed-Eater” type trim units will damage the skirting and is not covered by the warranty.

Attach the Bottom Channel component directly to the ground through the prepunched holes *(see figure 2)*. Spikes are required every 24 inches…extra holes are provided in the Bottom Channel component for convenience. Another spike or a drift punch may be used to drive spikes in completely. To allow for expansion, leave a 1/2" gap between each section of the Bottom Channel component. To form clean, attractive corners, the Bottom Channel component can be notched with snips *(see figure 3)* and then bent to the desired angle. *(Attached to the ground as shown in figure 4)*.

Note: in high wind areas; where ground below the unit is spongy; or where ground is loose from recent excavation and has not yet settled, it is advisable to fasten bottom channel to treated wooden stakes. For installation on concrete, use 3/4" masonry nail instead of ground spike. “Liquid Nail” cement or other similar methods of setting a fastener directly to concrete can also be used.

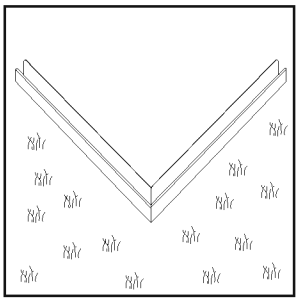

Figure 4

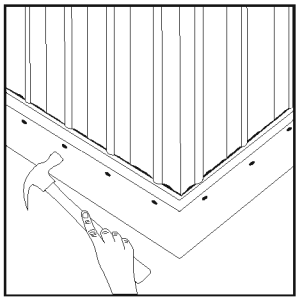

Figure 5

Step 2…

Mounting Top Trim Back Components

First determine where the Top Trim Back component(s) will mount on the lower part of the home. The bottom edge of the Top Trim Back component can extend below the bottom edge of the home if there is a solid support for nailing and a solid bearing for the Top Trim Front component against the side of the home. It is helpful to mark a line around the bottom of the home with a chalk line or other method to assure a straight line where the Top Trim Back component is to be installed.

The Top Trim Back component is installed by driving the fasteners in the middle of every slot *(see figure 5)*. ***Do not fasten tightly!*** (see fastening instructions on front page.) **Do not cut Top Trim Back components at the corners**. Gently bend over a sharp edge of a cutting table or a similar surface to form a corner *(see figure 6)*.

If the installation is made in extremely cold weather, the vinyl should be warmed to room temperature before bending. Warming will avoid the likelihood of cracking.

Step 3…

Cutting Top Trim Back Components

The Top Trim Back component is constructed with two parallel ridges at intervals below the nailing slots *(see figure7)*. These ridges may be used to measure the distance from the ground to the lower ridge. In cold weather, measure to the top ridge; In warm weather, measure to the bottom ridge. If the ground is level, several panels may be cut at one time using a hand power saw. ***Remember, if a power saw is to be used, mount a fine-toothed blade in reverse position*** *(see figure 8)*.

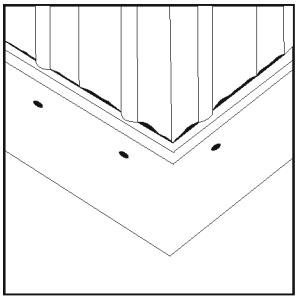

Figure 6

Locking the Skirting Panels

A snap lock tool is used to punch locking tabs on the outside bottom edge of each skirting panel *(see figure 9)*. When the panel is installed, it becomes locked in the Bottom Channel component. This feature assures retention of the panel in the Bottom Channel. ***Note:*** When installing in a high wind area, you may also punch locking tabs at the top of the panel for added locking strength.

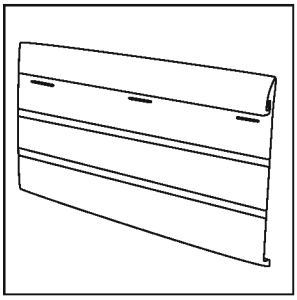

Figure 7

Self-aligning panels easily snap and slide into place *(see figure 10)*. Be certain that each skirting panel positively interlocks with the skirting panel adjoining it.
Note: (above 36" panel height, a framing support system should be considered.)

Installing the Skirting Panels

Panel can be installed by setting into the Bottom Channel and leaning against the top trim back. Lock the next panel as shown in figure 10. Panels should not be cut but bent around corners as shown in figure 11.

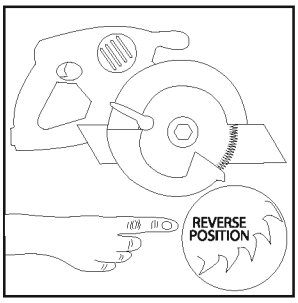

Figure 8

Fitting Skirting Panels Around Service Connections

Cutting and fitting to virtually any shape or radius is easily done with Vinyl Skirting. Using aviation snips, cut the panel to fit around the connection. Cut the panel from the side – **not from the top or bottom.** Keep snip points open as if cutting cloth to avoid cracking panels.

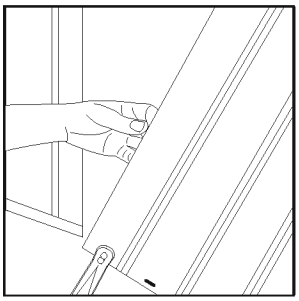

Figure 9

CAUTION

Proper installation of manufactured home skirting requires that the Top Back component be fastened loosely so the panel will slide freely in the nail slots. This can be accomplished by leaving the fastener 1/16" to 1/8" from the face of the panel. The fastener must penetrate a solid surface by 3/4".

Do not place outdoor cookers near the vinyl skirting because the heat will distort the panels. *Any heat source must be kept away from the panels or damage may occur.*

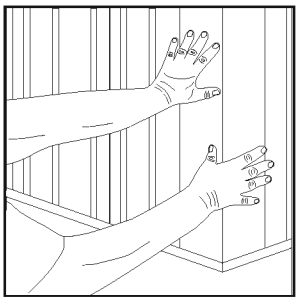

Figure 11

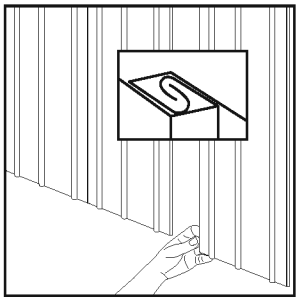

Figure 10

Step 4…

Installing the Top Trim Front Component

The Top Trim Front component(s) installs easily by snapping the top edge of its spring lock into the installed Top Trim Back component. Be sure to push the Top Trim Front component all the way into the Top Trim Back component **until it "snaps" into place.**

Each of the 15 pieces of the Top Trim Front components in the trim kit are notched 2" on one end *(see figure 12)* to permit overlapping. Overlap ends of adjoining Top Trim Front component(s) approximately 1".

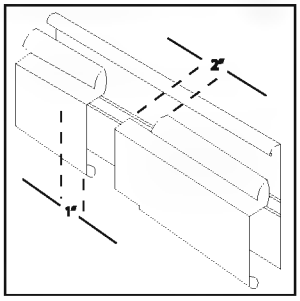

Figure 12

Cutting Additional Corners

If inside corners are needed, trim strips can be easily cut with aviation snips to form attractive corner joints by cutting a 45° mitre on adjacent ends and butting. If extra outside corners are required (for porches or add-on rooms), notch the trim strips as shown (see figure 13), bend around the corner and snap into place. Allow at least 3' of trim strip on each side of the corner.

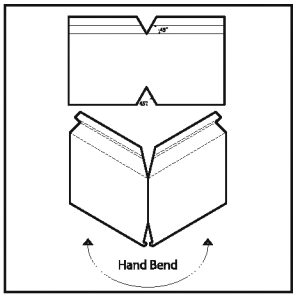

Figure 13

Easy Access

Access can be gained at virtually any point by simply lifting the Top Trim Front component and sliding out the desired number of panels. Accessibility to the area under the unit is available whenever desired.

Final Configuration

Please review the drawing to the right that shows how the components and skirting panels look after installation is complete.

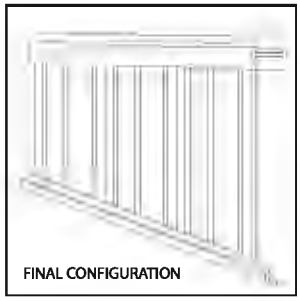

VGuard
VINYL SKIRTING PROTECTOR

Figure 14

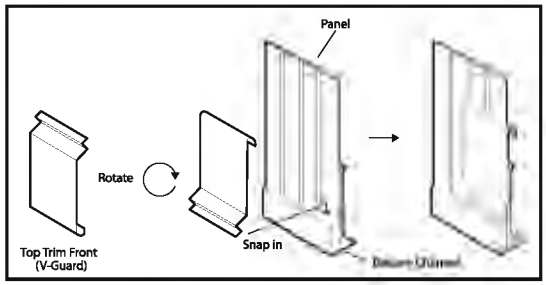

V-Guard Installation - (if applicable)

Installing the V-Guard Component

V-Guard Vinyl Skirting Protector component(s) installs easily by snapping the bottom edge of its spring lock into the Bottom Channel component. Be sure to push the V-Guard trim all the way into the Bottom Channel component **until it "snaps" into place.** *(see figure 14)*

Cutting additional corners

If inside corners are needed, V-Guard trim can be easily cut with aviation snips to form attractive corner joints by cutting a 45° mitre on adjacent ends and butting. If extra outside corners are required (for porches or add-on rooms), notch the V-Guard trim component, bend around the corner and snap into place. Allow at least 3" of V-Guard component trim on each side of the corner.

STYLECREST®
Style Crest, Inc.
2450 Enterprise St.
Fremont, Ohio 43420
800.945.4440
www.stylecrestproducts.com

Printed in U.S.A © Copyright 2012 02/12 **306133014**

HANDRAIL GRIP SIZE

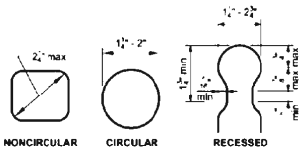

*HANDRAIL HEIGHT, MEASURED VERTICALLY FROM THE SLOPED PLANE ADJOINING THE TREAD NOSING, OR FINISH SURFACE OF RAMP SLOPE, SHALL BE NOT LESS THAN 34 INCHES AND NOT MORE THAN 38 INCHES.

*HANDRAIL SHALL BE PROVIDED ON AT LEAST ONE SIDE OF EACH CONTINUOUS RUN OF TREADS OF FLIGHT WITH FOUR OR MORE RISERS.

*HANDRAIL ASSEMBLIES AND GUARDS SHALL BE DESIGNED TO RESIST A LOAD OF 50 PLF APPLIED IN ANY DIRECTION AT THE TOP AND TO TRANSFER THIS LOAD THROUGH THE SUPPORTS TO THE STRUCTURE.

*HANDRAILS FOR STAIRWAYS SHALL BE CONTINUOUS FOR THE FULL LENGTH OF THE FLIGHT, FROM A POINT DIRECTLY ABOVE THE TOP RISER OF THE FLIGHT TO A POINT DIRECTLY ABOVE THE LOWEST RISER OF THE FLIGHT. HANDRAIL ENDS SHALL BE RETURNED OR SHALL TERMINATE IN NEWEL POSTS OR SAFETY TERMINALS. HANDRAILS ADJACENT TO A WALL SHALL HAVE A SPACE OF NOT LESS THAN 1-1/2 INCHES BETWEEN THE WALL AND THE HANDRAILS.

Richter ENGINEERING, INC.

Digitally signed by Mark V Richter
Date: 2024.01.12 11:32:12 -05'00'

STAIR TREAD AND RISERS

THE MAXIMUM RISER HEIGHT SHALL BE 7-3/4 INCHES. THE RISER SHALL BE MEASURED VERTICALLY BETWEEN LEADING EDGES OF THE ADJACENT TREADS. THE GREATEST RISER HEIGHT WITHIN ANY FLIGHT OF STAIRS SHALL NOT EXCEED THE SMALLEST BY MORE THAN 3/8 INCH. OPEN RISERS ARE PERMITTED PROVIDED THAT THE OPENINGS LOCATED MORE THAN 30 INCHES, AS MEASURED VERTICALLY, TO THE FLOOR OR GRADE DO NOT PERMIT THE PASSAGE OF A 4-INCH DIAMETER SPHERE.

THE MINIMUM TREAD DEPTH SHALL BE 10 INCHES. THE TREAD DEPTH SHALL BE MEASURED HORIZONTALLY BETWEEN THE VERTICAL PLANES OF THE FOREMOST PROJECTION OF ADJACENT TREADS AND AT A RIGHT ANGLE TO THE TREAD'S LEADING EDGE. THE GREATEST TREAD DEPTH WITHIN ANY FLIGHT OF STAIRS SHALL NOT EXCEED THE SMALLEST BY MORE THAN 3/8 INCH.

THE RADIUS OF CURVATURE AT THE LEADING EDGE OF THE TREAD SHALL BE NO GREATER THAN 9/16 INCH. A NOSING NOT LESS THAN 3/4 INCH BUT NOT MORE THAN 1-1/4 INCHES SHALL BE PROVIDED ON STAIRWAYS WITH SOLID RISERS. A NOSING IS NOT REQUIRED WHERE THE TREAD DEPTH IS A MINIMUM OF 11 INCHES.

THE GUARDS MAYBE WOOD, ALUMINUM, VINYL, OR EQUIVALENT.

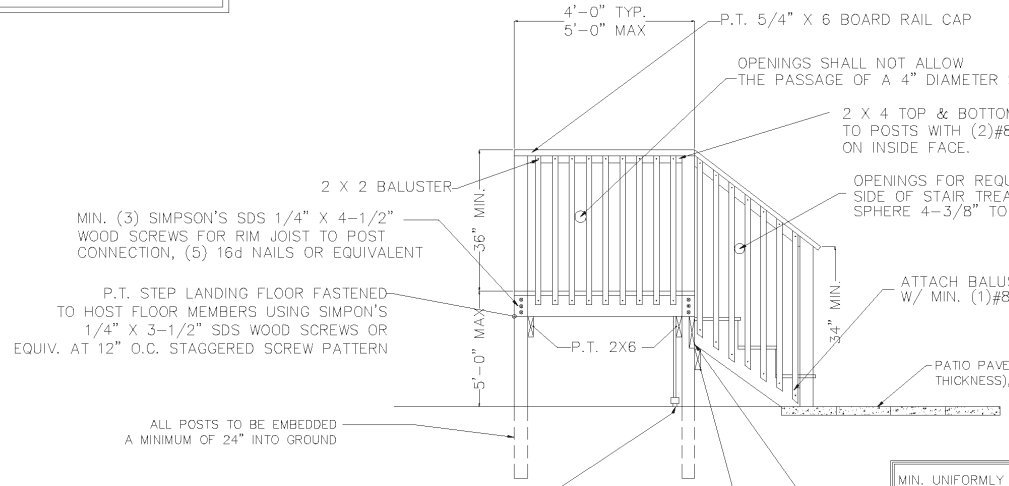

5'-0" LANDING HEIGHT = 8 STEPS (MIN.)

STAIR AND LANDING ILLUMINATION REQUIRED (PROVIDED BY LIGHT AT EXTERIOR DOOR) (ILLUMINATION LEVEL SHALL BE NOT LESS THAN 1 FOOTCANDLE AT THE WALKING SURFACE)

CONCRETE OPTION:
IF STEPS ARE INSTALLED ON EXISTING CONCRETE, THE GROUND ANCHORS AND TIEDOWN STRAP CAN BE OMITTED.

THE P.T. 4 X 4 POSTS SHALL BE ANCHORED TO THE EXISTING CONCRETE SLAB USING SIMPSON'S L-BRACKET OR EQUIVALENT.

MIN. UNIFORMLY DISTRIBUTED LIVE LOAD – STAIRS = 40 PSF

GUARD DETAIL

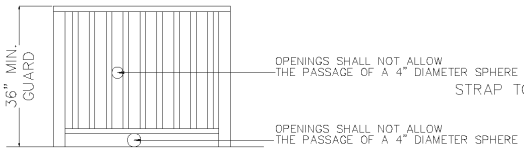

1/8" GALVANIZED CABLE COIL (7 X 7 OR 7 X 19 CONSTRUCTION) MAYBE USED INSTEAD OF THE 1-1/4" WIDTH TIE-DOWN STRAP

NOTES:
1.) HANDRAIL ASSEMBLIES AND GUARDS SHALL BE DESIGNED TO RESIST A CONCENTRATED LOAD OF 200 POUNDS IN ACCORDANCE WITH SECTION 4.5.1 OF ASCE 7.
2) IMMEDIATE RAILS, BALUSTERS, AND PANEL FILLERS SHALL BE DESIGNED TO RESIST A CONCENTRATED LOAD OF 50 POUNDS IN ACCORDANCE WITH SECTION 4.5.1 OF ASCE 7.

NOTE:
CONTRACTOR SHALL BE RESPONSIBLE FOR VERIFYING ALL DIMENSIONS AND CONDITIONS PRIOR TO CONSTRUCTION.

ALL STAIR COMPONENTS TO BE PRESSURE TREATED LUMBER

ALL FASTENERS IN CONTACT WITH P.T. LUMBER TO BE HOT DIP GALVANIZED OR STAINLESS STEEL

THIS ITEM HAS BEEN ELECTRONICALLY SIGNED AND SEALED BY MARK V. RICHTER, P.E. #56196 ON THE DATE AND/OR TIME USING A DIGITAL SIGNATURE. PRINTED COPIES OF THIS DOCUMENT ARE NOT CONSIDERED SIGNED AND SEALED AND THE SIGNATURE MUST BE VERIFIED BY THIRD PARTY CERTIFICATE AUTHORITY ON ANY ELECTRONIC COPY. (FAC 61G15-23.004)

01-08-2024
SENYB ENGINEERING, LLC
CA LIC. NO: 30244

These plans and specifications comply with Section 301.2.1 of the 2023 FBC-Residential (8th Edition)

V_{ULT} =ULTIMATE DESIGN WIND SPEED = 170 MPH (RISK CATEGORY II BUILDING, EXPOSURE "C")

V_{ASD} =NOMINAL DESIGN WIND SPEED = 132 MPH (TABLE 1609.3.1) (RISK CATEGORY II BUILDING, EXPOSURE "C") (3 second gusts)

INTERNAL PRESSURE COEFFICIENT = +0.18 AND -0.18

50 W. Central Ave., Ste. B
Lake Wales, FL 33853
Office: 863-589-5980
Email: engineer@senybengineering.com

These details and plans are confidential and proprietary materials. These materials are provided to the recipient for specific purposes and shall not be copied or otherwise reproduced and/or distributed for any purpose other than intended by Senyb Engineering Services.

These details and plans are the property of Senyb Engineering Services

ALL RIGHTS RESERVED.
© COPYRIGHT 2023

1SIES
ONE STOP SOLUTION SERVICES
1st Engineering and Design Company

Project Title: Site Construction
Drawn By: J.F.P
Date: 01-08-2024
Checked:
Revised:
Customer:
Client:
Address:
Drawing Scale: N.T.S.

Drawing Number:
S1
STAIR CONSTRUCTION

Senyb Engineering Services
50 W. Central Ave.
Lake Wales, FL 33853
© COPYRIGHT 2020

OLIVER Technologies, Inc.
467 Swan Ave • Hohenwald, TN 38462 • (800) 284-7437 • www.olivertechnologies.com • Fax (931) 796-8811

INSTALLATION USING CONCRETE RUNNER/ FOOTER

15. A concrete runner, footer or slab may be used in place of the steel ground pan.
    a) The concrete shall be minimum 2500 psi mix
    b) A concrete runner may be either longitudinal or transverse, and must be a minimum of 8" deep with a minimum width of 16 inches longitudinally or 18 inches transverse to allow proper distance between the concrete bolt and the edge of the concrete (see below).
    c) Footers must have minimum surface area of 441 sq. in. (I.e. 21" square), and must be a minimum of 8" deep.
    d) If a full slab is used, the depth must be a 4" minimum. Special inspection of the system bracket installation is not required. Footers must allow for at least 4" from the concrete bolt to the edge of the concrete.

NOTE: The bottom of all footings, pads, slabs and runners must be per local jurisdiction.

LONGITUDINAL: (Model 1101 LC "V")

16. When using Part# 1101-W-CPCA (wetset) simply install the bracket in runner/footer **OR** When installing in cured concrete use Part# 101-D-CPCA (dryset}. The 1101 (dryset) CA bracket is attached to the concrete using (2) S/8"x3" concrete wedge bolts (Simpson part# S162300H 5/8" X 3" or Powers equivalent). Place the CA bracket in desired location. Mark bolt hole locations, then using a 5/8" diameter masonry bit, drill a hole to a minimum depth of 3". Make sure all dust and concrete is blown out of the holes. Place wedge bolts into drille holes, then place 1101 (dry set) CA bracket onto wedge bolts and start wedge bolt nuts. Take a hammer and lightly drive the wedge bolts down by hitting the nut (making sure not to hit the top of threads on bolt). The sleeve of concrete wedge bolt needs to be at or below th1 top of concrete. Complete by tightening nuts.

LATERAL: (Model 1101 TC "V"I

17. For wet set (part# 1101-W-TACA) installation simply install the anchor bolt into runner/footer. For dry set installation (part# 1101-D-TACA mark bolt hole locations, then using a 5/8" diam. masonry bit. drill a hole to a minimum depth of 3". Make sure all dust and concrete is blown out of the hole. Place wedge bolts (Simpson part #5162300H 5/8" X 3" or Powers equivalent) into (D) concrete dry transverse connector and into drilled hole. If needed, take a hammer and lightly drive the wedge bolts down by hitting the nut (making sure not to hit the top of threads on bolt), then remove the nut. The sleeve of concrete wedge bolt needs to be at or below the top of concrete.
18. When using part# 1101 CVW (wetset) or 1101 CVD (dryset), install per steps 17 & 18.

Notes:
1. **LENGTH OF HOUSE IS THE ACTUAL BOX SIZE**
2. **0 = = LOCATION OF TRANSVERSE BRACING ONLY**
3. **[] = LOCATION OF LONGITUDINAL BRACING ONLY**
4. **[3= = TRANSVERSE AND LONGITUDINAL LOCATIONS**

ALL WIDTHS AND LENGTHS UP TO 52'

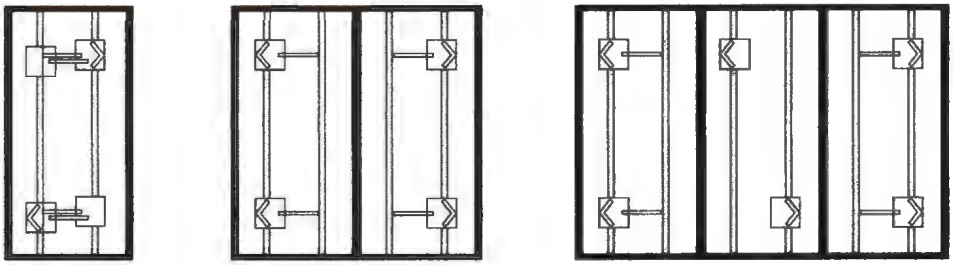

ALL WIDTHS AND LENGTHS OVER 52' TO 80"

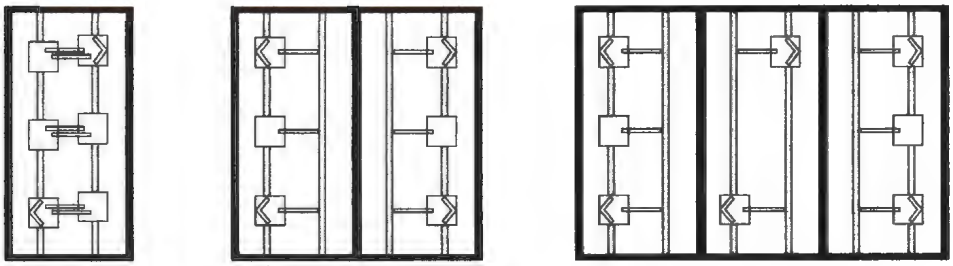

HOMES WITH 5/12 ROOF PITCH REQUIRE: PER FLORIDA REGULATIONS
6 systems for home lengths up to 52' and 8 systems for homes over 52' and up 80'.

PATENT# 6634150 & OTHER PATENT PENDING

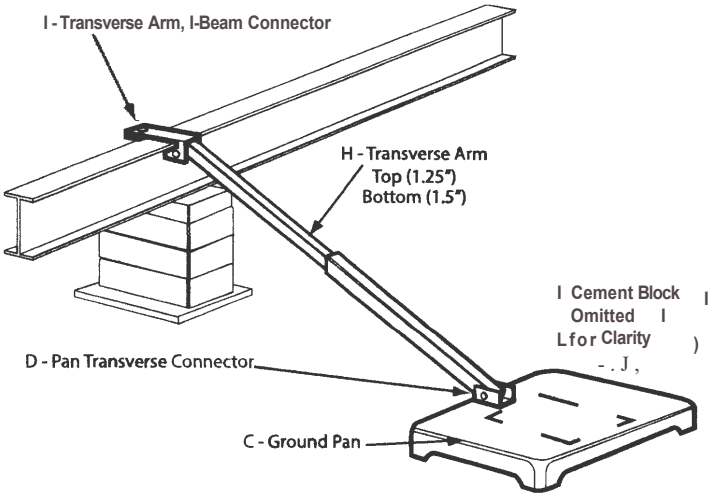

Model # 1101 T "V"

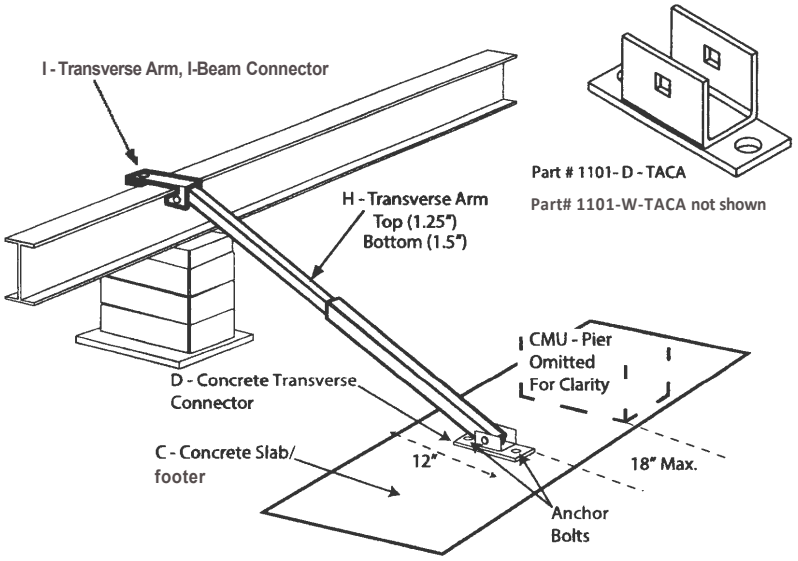

Model # 1101 TC "V"

Florida approved 4' ground anchors may be used in all locations except where home manufacturers specifications for sidewall straps are in excess of 4,000 lbs. These locations require a 5' anchor. Per Florida code.

C = GROUND PAN / CONCRETE FOOTER OR RUNNER

D = GROUND PAN/ CONCRETE U BRACKETS TRANSVERSE CONNECTOR (connects with grade 5 -1/2"x 1 1/2" carriage bolt and nut)

E = TELESCOPING V BRACE TUBE ASSEMBLY (1.5" TUBE BOTTOM AND 1.25" TUBE INSERT) OR 1.5" TUBE

F ="V"BRACE I-BEAM CONNECTOR ASSEMBLY

H = TELESCOPING TRANSVERSE ARM ASSEMBLY

I = TRANSVERSE ARM I-BEAM CONNECTOR (connects with grade 5 - 1/2"x 2 1/2" carriage bolt and nut)

J = V PAN BRACKET (connects with grade 5 - 1/2"x 1 1/2" carriage bolt and nut)

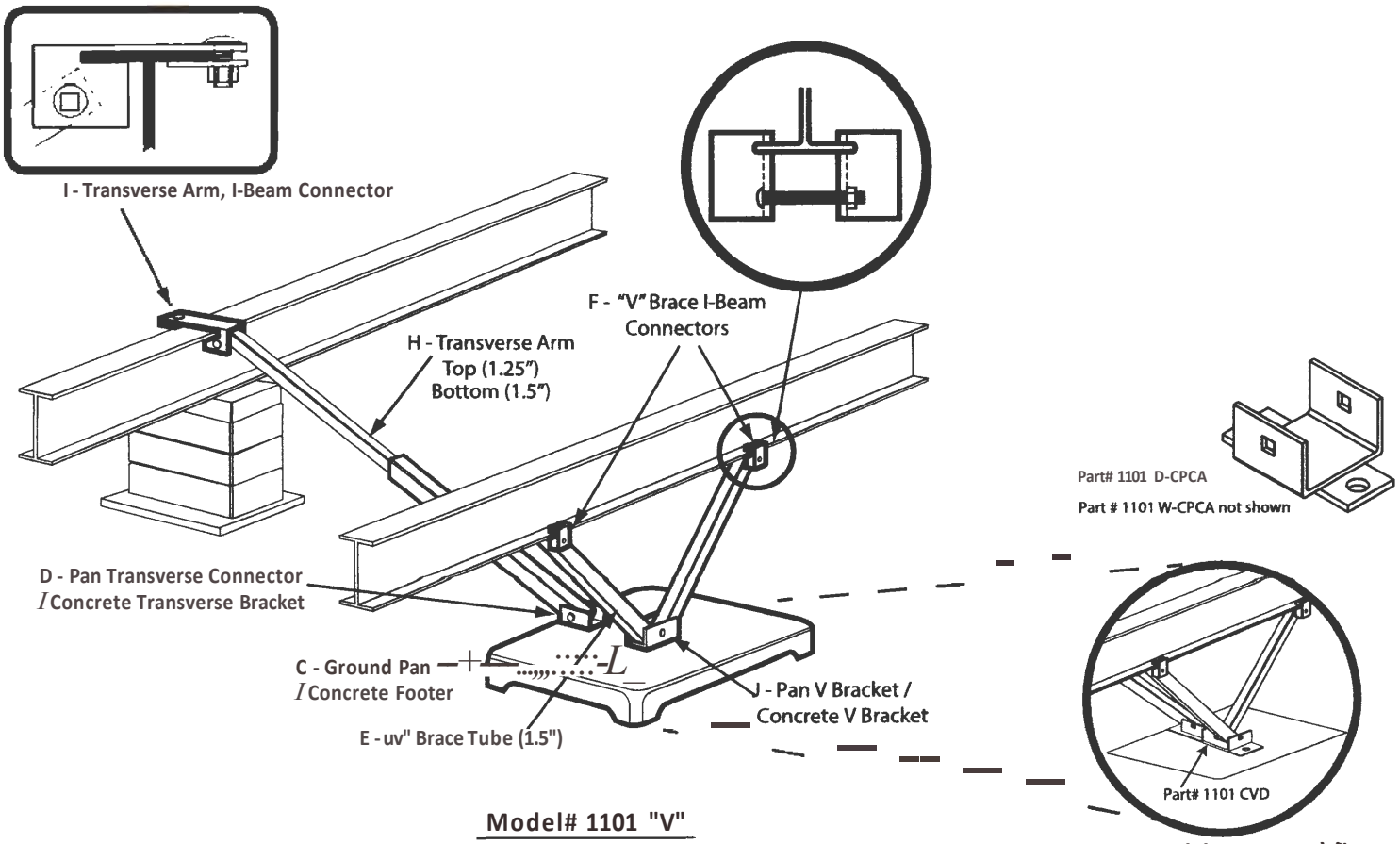

Model# 1101 "V"

Model # 1101 C "V"

PATENT# 6634150 & OTHER PATENT PENDING

Residential Heat Loss and Heat Gain Calculation

8/13/2018

In accordance with ACCA Manual J

Report Prepared By:

For:

Design Conditions: West Pam Beach

Indoor:		**Outdoor:**	
Summer temperature:	70	Summer temperature:	90
Winter temperature:	70	Winter temperature:	42
Relative humidity:	55	Summer grains of moisture:	127
		Daily temperature range:	Medium

Building Component	Sensible Gain (BTUH)	Latent Gain (BTUH)	Total Heat Gain (BTUH)	Total Heat Loss (BTUH)
Duct	711	0	711	719
Floors	1,048	0	1,048	1,864
Walls	1,376	0	1,376	1,632
Ceilings	1,977	0	1,977	1,538
People	1,200	920	2,120	0
Fireplaces	0	0	0	0
Misc	1,200	0	1,200	0
Windows	4,317	0	4,317	1,568
Doors	483	0	483	573
Glassdoors	766	0	766	891
Skylights	0	0	0	0
Infiltration	1,858	3,848	5,706	6,305
Whole House	**14,936**	**4,768**	**19,704 (1.5 tons)**	**15,090**

Load calculations are estimates only, actual loads may vary due to weather and construction differences.

OVERHEAD/UNDERGROUND ELECTRIC SERVICE DIAGRAM

20' POLE

SERVICE AMPERAGE 150 AMPS

Service Wire Type (AL/CU) Aluminum

Service Conductor Size 2/0

Conduit Type PVC

Conduit Size 2"

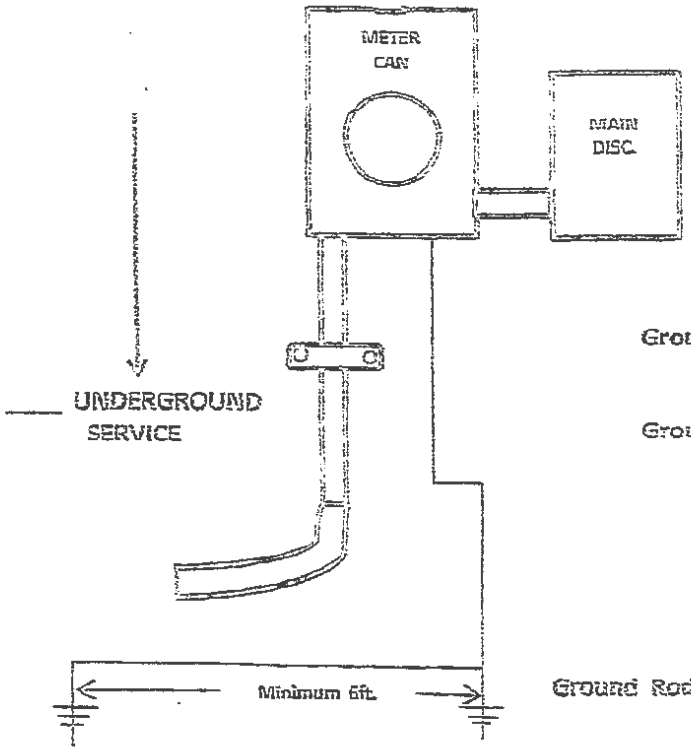

Ground Wire Type # 4 Bare

Ground Conductor Size # 4

Ground Rod Size/Type 5/8 Galvanized

Version: March 21, 2023

BRADENTON TROPICAL PALMS INC.

ARCHITECTURAL REVIEW MANUAL

2023

BRADENTON

BTP

TROPICAL PALMS

TABLE OF CONTENTS

1.0	Architectural Review Committee	3
1.1	Authority	3
1.2	Responsibilities	3
1.3	Limiting Conditions	3
2.0	The Application and Approval Process	4
2.1	Shareholder Application and Approval	4
2.2	Lot Renter Application and Approval	4
2.3	The BTP Office ARC Review	5
2.4	ARC Decisions	5
2.5	Variances	6
2.6	Written Approvals and Oral Statements	6
2.7	Responsibility of Applicant	6
3.0	Mobile Home Improvements (General)	7
3.1	New Structures	7
3.2	Reconstruction of Damaged Structures	8
3.3	Modification of Existing Structures	8
3.3.1	General Provisions	8
3.3.2	Application Submissions	9
3.3.2.1	Major Projects	9
3.3.2.2	Minor Projects	10
3.3.3	Job Site Standards	10
3.4	Temporary Structures	10
4.0	Mobile Home Improvements (Specific)	10
4.1	Accessory Structures – Sheds	10
4.2	Air Conditioning Systems	10
4.3	Finishes, Siding and Exterior Colors	11
4.4	Driveway and Carport	11
4.5	Skirting	11
4.6	Steps	12
4.7	Roofs	12

4.8	Windows	12
4.9	Doors	12
4.10	Mailbox	12
5.0	Mobile Home Accessories	13
5.1	Awnings	13
5.2	Hurricane Shutters	13
5.3	Antenna and Satellite Dish	13
5.4	House Numbers	13
5.5	Exterior Lighting	13
5.6	Pergola, Gazebo	14
5.7	Screen Enclosures and Sun Screens and Shades	14
5.8	Water Softener and/or Conditioning System	14
6.0	Landscaping	14
6.1	Landscaping – General	14
6.1.2	Garden Maintenance	15
6.1.3	Borders	15
6.1.4	Rocks, Stones, Mulch	16
6.2	Planters	16
6.3	Fences	16
6.4	Sidewalks	17
6.5	Pavers	17
6.6	Solar Collectors and Rain Barrels	17
6.7	Seasonal Decorations	18
6.8	Pots and Decorative Items	18

1.0 Architectural Review Committee

1.1 Authority

Where approval or consent of the *Board of Directors* (BoD) is required under these Bylaws or other Cooperative documents, the BoD may, by resolution, delegate its authority to a committee of two or more directors. Each such committee shall keep minutes of each approval procedure. If the committee fails to unanimously approve the requested action, it shall be referred to the BoD at its next regularly scheduled meeting for final determination.

1.2 Responsibilities

a) The *Architectural Review Committee* (ARC) is to be used to review and approve proposed plans for Structures or Accessory Structures within Bradenton Tropical Palms and establish the standards used to evaluate exterior modifications, including landscaping, for completed Structures and/or Accessory Structures. The *Architectural Review Manual* sets forth specific design, environmental and construction site standards and guidelines for lots within Bradenton Tropical Palms. It is organized to assist owners and builders from the preliminary planning phase of a reconstructed structure or modified structure and/or lot through to its completion.

b) Applicant is financially responsible for any and all damage(s) that may be caused to existing infrastructure systems, including but not limited to water/sewer/power/cable, etc. All repairs to such system(s) must be completed to current approved standard(s) and material(s).

c) While individual creativity is encouraged, standards have been established to maintain a measure of aesthetic quality and consistency throughout the neighborhoods. In some cases, there will be no permitted variation from established standards, while in other areas flexibility may be permitted with the review and approval of the Architectural Review Committee. Adherence to the standards contained herein will contribute to the continuation of the inherent attributes of the community which makes it a highly desirable place to live. Owners within Bradenton Tropical Palms (The Park) should familiarize themselves with the guidelines contained herein.

d) Unless otherwise noted, all exterior modifications, improvements, upgrades and/or changes to any lot and/or structure must be submitted to the ARC for review and approval. This excludes *Common Areas*.

e) In some cases, items which the homeowner may consider to be "replacements" are, in fact, "changes." A "replacement" is defined as any new item that is identical to the original item in form, fit, style, color and function. Any new item that does not meet all of the criteria for a "replacement" is then, by definition, a "change".

1.3 Limiting Conditions

Where approval or consent of the *Board of Directors* (BoD) is required under these Bylaws or other Cooperative documents, the BoD may, by resolution, delegate its authority to a committee of two or more directors. Each such committee shall keep minutes of each approval

procedure. If the committee fails to unanimously approve the requested action, it shall be referred to the BoD at its next regularly scheduled meeting for final determination.

The following limiting conditions shall apply to activities of the Architectural Review Committee (ARC):

a) The standards contained herein set forth minimum requirements.
b) In the event building codes and/or other provisions of law require greater restrictions than are imposed by the Architectural Review Committee, the more stringent provisions shall control. It is, however, the responsibility of the applicant to ensure that all permits are applied for and approved prior to undertaking any work.
c) Approval of applications and/or design documents by the ARC shall not be construed as meeting the requirements of City of Bradenton and/or any other governmental and/or quasi-governmental authority with jurisdiction over the community and/or proposed improvements.
d) Approval of applications and/or design documents by the ARC shall not impose any responsibility on the ARC for the design, engineering and/or construction of Structures or Accessory Structure. ***The scope of any review and approval by the ARC shall be limited solely to whether the plans meet certain requirements and/or standards relating to aesthetics, and the harmony and compatibility of the proposed improvements on Applicant's Lot with other improvements to be constructed within Bradenton Tropical Palms.***
e) The Standards herein are subject to change by the ARC without prior notice. Applicants should contact the ARC to ascertain what changes, if any, may affect proposed plans for reconstruction and/or modifications to completed Structures prior to undertaking preliminary or final designs.
f) The ARC shall not be liable for mistakes and may require an Applicant to correct deficiencies arising as a result of any ARC approval.

2.0 The Application and Approval Process

2.1 Shareholder Application and Approval

The following are Shareholder guidelines for the application and approval process with respect to the submission of an application for the reconstruction and/or modification to an existing Structure and/or Accessory Structure. The ARC shall approve or disapprove any properly completed application from a Shareholder, submitted to it, and/or request additional information it may require, within 10 working days after receipt. ***NOTE: Appropriate Permits must be obtained from the City.***

2.2 Lot Renter Application and Approval

A Lot Renter must follow the steps/guidelines below before undertaking any modifications or reconstruction to an existing Structure and/or Accessory Structure:

Step 1: Prepare the ARC request as defined under major or minor project.

Step 2: The lot renter must then obtain in writing from the city of Bradenton whether permits are required or not.
Step 3: The ARC will review the project and determine if it meets all requirements of the ARC.
Step 4: After the lot renter has received approval from ARC, he/she must obtain permit(s) from city, if required, and submit to ARC for final approval. The ARC will make the final approval within 10 days of receipt of the permits.
Step 5: After the work has been completed, the lot renter must call the City of Bradenton to inspect the work that has been done and close the permit.
Step 6: After the work has been completed, the lot renter must provide a copy of the closed permit to the office so that the ARC Committee can check the work to ensure that it matches the original approval.

2.3 The BTP Office ARC Review

a) The BTP Office will review Architectural Review Applications for completeness prior to acceptance and give the resident a copy of the form.
b) The BTP Office will automatically deny any incomplete applications if it does not include the following and will ask the resident to re-submit the application when it is complete:
    1) Lot diagram: to show where shed, garden border, new pavers, or driveway extension will be located.
    2) Dimensions of improvement: actual size of shed, patio size, fences height and length, etc.
    3) Colors: There are charts at the office for unit colors, trim colors, and driveway colors. If a color change is requested and the color is not on the color chart, a color chip must accompany the request form and be at least 1" x 1" in size.
    4) Any other requirement of the ARC Committee requested prior to approval.
c) If the BTP Office deems the ARC request form is complete, the form will be put in the ARC Committee mailbox for action by the committee.
d) Once the ARC Committee approves, denies, or asks the resident for more information in order to make a final decision, the BTP Office will be given the application that includes the committee's written decision.
e) The BTP Office will contact the resident to give him/her this information.
f) The BTP resident should be given a copy of the application with the ARC Committee decision via a paper copy or via an attachment to an email message.
g) The completed ARC form that is approved or denied by the ARC Committee will be put into the resident file for future reference.

2.4 ARC Decisions

a) Upon receipt of a properly completed application, along with any required design documents, the ARC will review all applications weekly. At its designated scheduled meeting time and place, the ARC will publicly review the application and render one of three (3) decisions to be recorded in the meeting minutes:
    a. Approved as submitted
    b. Disapproved
    c. Approved with stipulations.

b) If an application is APPROVED WITH STIPULATIONS, the Applicant must make changes prior to beginning any work. However, the resubmittal of applications and/or design documents is not required. STIPULATIONS are binding upon an Applicant.
c) In the event an application is DISAPPROVED at time of submission, the Applicant must make appropriate changes and re-submit an application with revised design documents. In some cases, an application may be DISAPPROVED because it inadequately describes the Applicant's request or because it is in conflict with the standards of the ARC. If an application has been DISAPPROVED, the decision may be appealed to the Board of Directors within 30 days of the ARC's decision.
d) The approval of applications and/or design documents for new construction or modifications on a certain Lot shall not obligate the ARC to make similar approval on other Lots with similar applications and/or design documents.
e) The ARC is not obligated to review incomplete applications and/or design documents that do not conform to the requirements set forth by the ARC
f) The time period for rendering decisions by the ARC for any step in the Architectural Review process shall not commence until receipt of completed applications and/or design documents

2.5 Variances

The ARC may authorize a variance from compliance with any of its standards and procedures when circumstances such as topography, natural obstructions, hardship, and/or aesthetic and/or environmental considerations require. Such variances may only be granted, however, when unique circumstances dictate, and no variance shall:

1) be effective unless in writing
2) be contrary to the restrictions set forth in the body of the Governing Documents
3) prevent the ARC from denying a variance in other circumstances. The inability to obtain any permit and/or any financing shall not necessarily be considered a hardship warranting a variance.

2.6 Written Approvals and Oral Statements

Applications and design documents on file with the ARC and letters of approval as may be issued by the ARC shall be the sole source of reference regarding ARC approval. Oral statements may not be relied upon. There is no implied consent if the Owner does not hear from the ARC. The Owner has the responsibility to follow up with the ARC.

2.7 Responsibility of Applicant

The ARC assumes no liability for any aspect of reconstruction and/or modifications to completed Structures or Accessory Structures, including, without limitation, the following obligations which are the sole responsibility of the Applicant:

1) Selection of licensed and insured building and trade contractors.
2) Quality of workmanship and/or materials provided by any building and/or trade contractor.

3) Compliance with ordinances, American Disability Act (ADA) provisions, environmental regulations, building codes, safety requirements, and/or product approvals.
4) Suitability of surface and/or subsurface soil conditions.
5) Water runoff and/or drainage control during construction or after completion of improvements.
6) Accuracy of elevation grades, stakeouts, surveys and/or lot grading plans.
7) Permits and/or approvals, as may be required by any government and/or quasi-governmental authority.
8) Completeness or adequacy of application and/or design documents submitted by an Applicant as well as notification to the office when the work has been completed so the ARC Committee can check the work to ensure that it matches the original approval.
9) Determination of structural, mechanical, electrical and/or fire/safety adequacy as well as code compliance and/or other technical aspects of proposed designs and construction materials/methods, which are the sole responsibility of Applicants and/or architects, engineers and contractors on behalf of Applicants
    1) Compliance with the Architectural Review Manual, the Declaration and/or any other covenants, restrictions and easements burdening a Lot or the Property. (Property lines can be determined by the Manatee County Property Appraiser) http://www.manateepao.gov

3.0 Mobile Home Improvements (General)

3.1 New Structures

All mobile homes brought in the park must first be approved in writing by the Board of Directors. Plans for new mobile homes with all accessory structures must be approved by the ARC Committee prior to installation. Plans must be submitted as a major project.

All homes brought into the park must meet the following minimum standards

1. All homes must comply with standards established by the U.S. Department of Housing and Urban Development (HUD), City, State and all other governmental agencies under which the manufacturing and installation of mobile homes and accessory structures apply.
2. A Florida-licensed mobile home installation contractor must install and tie-down the home
3. May not be more than five (5) years old
4. Must be professionally installed by a licensed mobile home installer
5. Must be at least 12 feet wide by 36 feet long
6. Patio and carport awnings specified on the accepted site plan must be installed within sixty (60) days of installation of the Home. See Driveway and Carport.
7. Grass must be installed upon completion
8. Green Space Requirement. Bradenton Tropical Palms is within R-4, zoning, where the maximum allowed impervious surface is 70%. The lots are considered existing nonconforming if they are 2000 square feet, as the minimum lot size in R-4 is 3,000 sf, but

the standards still apply to the smaller lots. Only an approved permit from the City of Bradenton can supersede this requirement.

3.2 Reconstruction of Damaged Structures

In the event of damage to an existing Structure, owners are required to submit an application accompanied by design documents describing in detail the reconstruction elements to be undertaken to rehabilitate the Structure and return it to "before damaged" condition. All elements and processes of the reconstruction project must conform to all requirements of the ARC, and be approved by the ARC before any construction is undertaken. Design documents required for reconstruction will depend on the extent of the project, and are reviewed at the end of this section.

3.3 Modification of Existing Structures

Any changes, permanent or temporary, to the exterior appearance of a residence and/or lot are subject to review and approval by the ARC. The review process is not limited to major modifications or alterations, such as adding a lanai, porch or patio. It includes such minor items as changes in doors, screens and windows and landscaping. Approval is also required when an existing element is requested to be removed.

3.3.1 General Provisions

The following general provisions apply to all applications for modifications and/or reconstruction:

a) Modifications and/or reconstruction must be approved by the ARC prior to the commencement of work. In addition to other available remedies, the ARC may recommend to the Board of Directors that work cease in the event such work is commenced without approval.

b) In the event work is performed without an approved application, the Board of Directors may require, at the expense of the Applicant, the following:

   1) The timely removal of such modifications/reconstruction and the restoration of existing elements and/or

   2) The timely completion of remedial work to bring such modifications/reconstruction into compliance with the Architectural Review Manual.

c) At the option of the ARC, comments on proposed modifications/reconstruction may be solicited from other owners. The ARC may, but is not obligated to, take into consideration the comments of others before rendering a decision on an application.

d) All modifications/reconstruction must be completed within the time limit stated on the application. Unless an extension of time is approved by the ARC, all work must be completed within 90 days maximum of the date of application approval. Extensions must be approved by the ARC.

e) Applicants shall ensure that all building and/or trade contractors comply with Construction Site Standards

f) Upon the completion of modifications/reconstruction, the ARC may conduct [but shall not be obligated to conduct] a final inspection to determine if all requested and approved elements, including landscaping, have been completed in accordance with the approved application and/or related design documents. Applicants are obligated to take remedial action as may be required by the ARC to complete or correct elements that are not in compliance with the approved application and/or related design documents. If deviations are noted, the ARC will notify the Owner and the Board of Directors

3.3.2 Application Submissions

3.3.2.1 Major Projects

All plans and data required for approval shall be of sufficient detail and clarity to accurately portray the proposed project. No existing design or element of a design will be considered as precedent for any future repetition by the same or another owner. As a minimum, each plan required for the appropriate step in the review process must convey the information outlined below.

a) The owner's name must be shown on all plan sheets.
b) The street address and lot number must be shown on all site plans.
c) A drawing with existing and proposed outline of the structure
    2) Setback dimensions from property line (Property lines can be determined by the Manatee County Property Appraiser) http://www.manateepao.gov
    3) Walkways
    4) Driveways (for licensed vehicle parking)
    5) Roof Plan
    6) Decks
    7) Patios (not for licensed vehicle parking)
    8) Air conditioning units
    9) Sheds
    10) Fences
    11) Garage
    12) Lanais, Screen Rooms, Sun Rooms, Florida Rooms, etc.
    13) Water and sewage hookups
    14) Outlines of adjacent structures and setbacks from said structures
    15) Proposed drainage patterns
    16) Etc.
d) Exterior Details
    1) All exterior elements of design
        i. Proposed lighting
        ii. Materials and colors (samples required). Colors must be arranged as to depict the proposed color scheme
        iii. Landscape Plan

3.3.2.2 Minor Projects

a) Exterior Details
   1) Materials and colors (samples required). Colors must be arranged as to depict the proposed color scheme
   2) Landscape Plan – see landscaping below

3.3.3 Job Site Standards

a) Portable on Demand Storage (PODS), trailers, dumpsters require a BTP permit and must be removed after 30 total days onsite. Portable storage or dumpsters must be placed on owner property and not common areas.
b) All tools and equipment shall be neatly stored on the driveway at the end of the work day if not put inside the unit.
c) Trash and construction debris must be removed from the unit daily or stored in Portable Storage or placed in a dumpster.

3.4 Temporary Structures

Temporary structures are not allowed with the exception of trailers and dumpsters, etc. used during construction and clothes drying lines (see Laundry in the BTP Rules and Regulations)

4.0 Mobile Home Improvements (Specific)

4.1 Accessory Structures – Sheds

Other than the shed which is approved as part of the original construction, additional sheds/outbuildings MAY be allowed as follows:

1) Shed/Outbuilding will only be allowed if there is sufficient room upon the lot as determined by the ARC.
2) Plans as notated under major projects must be submitted with application
3) The placement of a shed/outbuilding will be determined by the ARC with consideration to interference with neighbor's use of property and ability of landscapers to access the property. The ARC may determine that stone or pavers must be installed if there is limited room to maneuver between structures.
4) A free-standing shed/outbuilding may only be installed if there is sufficient room on the lot to do so as determined by the ARC.
5) Extensions of existing sheds to meet the existing mobile home (i.e., The breezeway is enclosed) must be finished with the same materials and colors as exist on the mobile home
6) The shed should be located in the back or near the back of the unit.

4.2 Air Conditioning Systems

a) New construction requires the installation of a central air conditioning system
b) Air conditioners can be extremely noisy and may interfere with the enjoyment of other adjacent mobile home owners. Criteria for placement of central air conditioning units will include location of windows, doors and driveways of surrounding buildings. Plans must be submitted as notated in major projects

c) Window air conditioning units are grandfathered on existing mobile homes.
d) Window and wall units will be properly supported with supports designed for such
e) No temporary supports will be allowed (no 2x4's stuck in the ground to prop up unit)
f) Criteria for placement of new air conditioning units, other than replacement of existing air conditioning units must be submitted as notated in major projects.

4.3 Finishes, Siding and Exterior Colors

a) Due to the nature of termites, all new construction must be sided with aluminum, vinyl siding or fiber cement board.
b) Colors schemes must be approved by the ARC. Approved colors are available for viewing in the office.
c) If the unit is being refreshed with the existing paint color, an architectural request is not required.
d) The colors for each unit should be limited to:
    - **2(two) colors plus white only if a third color is desired**. The **main color** which would be the exterior walls of the mobile can be white or one of the 2 lightest shades (some exceptions may apply) of the chosen color from samples available at the front office.
    - The **second color, if used for doors, shutters and the trim, can be a compatible light or deeper shade of main color or a contrasting color (Trim can be no wider than six inches)**

4.4 Driveway and Carport

a) Plans as notated in major projects must be submitted prior to installation of driveway or carport and be in compliance with the 30% Green Space requirement.
b) New driveways installed under the carport (must be of concrete} and accessory parking spaces must be of concrete (or pavers and be designated as vehicle parking space and will require a city permit with no encroachment on neighbours' property with no exceptions.
c) Carports uprights must be silver or white aluminum.
d) Carport roofs may be aluminum or match the existing material of the roof.
e) Driveways may be painted- approved colors are available in the office.
    1) Any colors or materials other than the approved paint colors and concrete must be approved by the ARC. Painted driveways must be maintained by regularly cleaning and painting.

4.5 Skirting

a) Skirting may be constructed of siding or blocks that must be approved by the ARC prior to installation.
b) Skirting must be installed within thirty (30) days of installation.
c) Patio blocks or cement barrier of at least one (1) foot must be installed between the mobile home skirting and the lawn.

4.6 Steps

a) Porch steps must be constructed of aluminum, concrete, fiberglass and composite decking. However, pressure treated wood can be used for framing only.

4.7 Roofs

a) New Roofs and/or major roof repairs must be approved by the ARC.
b) All mobile home roofs must be of one material and one color.
c) Only the carport may be made from a different material than the mobile home roof.
d) Shed/Outbuilding roofs must be approved by the ARC.
e) The following Roof Materials are allowed:
    1) Shingle
    2) Metal
    3) Membrane
    4) All shingle colors must be approved by the ARC and must compliment the exterior color of the mobile home.

4.8 Windows

1. All shareholders and lot renters must obtain ARC approval for:
    a. Replacement of a window of the same size as the existing window
    b. If a new window opening is being installed
    c. The window opening is being made larger
    d. The window opening is being replaced with a door
    e. The window opening is being covered up with siding - siding must match the material and color of the existing siding

3 Existing windows cannot be replaced with any other materials except white vinyl-clad or aluminum windows.

4.9 Doors

All shareholders and lot renters must obtain ARC approval for:

a. The replacement door is the same size as the existing door
b. If a new door opening is being installed
c. The door opening is being made larger
d. The door opening is being covered up with siding - siding must match the material and color of the existing siding.

4.10 Mailbox

a) Each mobile home must have one mailbox that is attached to the mobile home. Free standing mailboxes set into the ground are not allowed.
b) Black mailboxes are approved, other colors and styles must be approved by the ARC
c) Mailboxes must be kept in like new condition

5.0 Mobile Home Accessories

5.1 Awnings

a) Fabric
   1) Must be made of a material designed for outdoor use with a minimum seven (7) year color fade guarantee.
   2) Color must be complementary to the existing color palette of mobile home and must be approved prior to installation as a minor project.

b) Metal
   1) Must be specifically manufactured for mobile home use.
   2) Must be able to close and lock.
   3) Must be painted to match the existing color palette of the mobile home.

5.2 Hurricane Shutters

a) Permanent hurricane shutters must adhere to the local building code and must be approved by the ARC as a minor project.

b) Permanent hurricane shutters must be of a type manufactured for such a purpose. Approved colors are clear, white or match the existing paint color of the exterior of the home.

c) Temporary hurricane barriers such as plywood cannot be installed until a storm is named and considered likely to make landfall in Florida within three (3) days and must be removed within ten (10) days of the said named storm is no longer a threat.

5.3 Antenna and Satellite Dish

a) Cannot be placed at the front of the mobile home.

b) Placement must be approved by the ARC.

c) Cannot exceed 2 feet above the peak of the roof.

d) Old equipment shall be removed before new equipment is installed.

5.4 House Numbers

a) All units must have house numbers.

b) All house numbers must be visible and not obscured by landscape, etc.

c) All house numbers will be kept in like new condition.

d) All numbers must be at least 3 inches.

e) Numbers may be black, gold or silver.

f) Decorative number plaques must be approved by the ARC.

5.5 Exterior Lighting

a) Each unit must be equipped with one exterior light.

b) Lights must have a shade.

c) Shade must be kept in good condition.

d) Glass must be replaced if broken.

e) Fixture must be securely attached to the wall or ceiling.

f) Any faded parts must be painted and maintained like new.

g) Bulbs must be white.
h) Lights must be installed in a manner so that they do not shine directly into the windows of neighboring units.

5.6 Pergola, Gazebo

Approval of a Pergola or Gazebo is contingent upon lot space. Submit plan as described in Major Projects. Most lots will not accommodate a gazebo or pergola.

5.7 Screen Enclosures and Sun Screens and Shades

a) Screen enclosures and sunrooms must be approved prior to installation and require an application as noted in Major Projects.
b) Only black screens are allowed.
c) Uprights, kick plates and doors must match the existing unit.
d) Plastic windows are not allowed on new structures.
    a. Existing plastic windows must be kept in good condition without cracking or rips.
    b. Existing plastic windows must be repaired with the same material and color as exists on other plastic windows.
e) Sun shades may be installed as follows
    1) Must be of a material made for outdoor use.
    2) Must be kept in like new condition - no fading, rips or tears.
    3) Must be installed on a track.
    4) May be of a pull-down blind style or:
    5) May be of a curtain style.
    6) Colors must be complementary to the mobile home.
    7) Must be secured so as to be able to be tied back in case of high winds.
    8) Must be removed when resident is not in the park for an extended period of time.
    9) No kite style shades are allowed.

5.8 Water Softener and/or Conditioning System

a) Requires Major Project Application.
b) Water softeners must be fully enclosed within a shed or enclosure built for such purpose.

6.0 Landscaping

6.1 Landscaping – General

a) Unit Owners shall be responsible for the landscaping, trees, plants and shrubs on the unit and shall be liable for any damage caused thereby. However, to the extent that the assessment includes landscaping service, Unit Owners shall be relieved of such obligation as follows:
    1) The Park mows, blows and provides limited edging of grassed areas. The Board of Directors reserves the right to change or cancel any landscaping services.
    2) Mowing days may vary by season. Lawns are generally mowed twice a month in the winter and every week during the growing season.

b) ARC requirements for soft landscaping (plants, trees and shrubs), must be approved by the ARC.

1) The ARC request must include the following:

i. A diagram of the distance between the canopy width, the unit and any other unit that adjoins the lot where the tree or shrub is to be planted.

ii. If applicable, a diagram of the garden bed that is to be installed as per preceding instructions.

iii. The request must state the name of Tree or Shrubs (include pictures).

iv. The location in which it will be planted, and

v. The width and height of the plant when it reaches maturity.

vi. IF YOUR LANDSCAPE PLANS EXTEND BEYOND THE BOUNDARY OF YOUR UNIT (HALF WAY) PLEASE ADD WRITTEN APPROVAL FROM YOUR NEIGHBOR, PRIOR TO SUBMITTING YOUR APPLICATION, AS DESCRIBED BELOW.

6.1.2 Garden Maintenance

a) All gardens must be mulched yearly.

b) All gardens are to be maintained year-round.

c) The following restrictions for plant materials:

- Norfolk Pines are not allowed to be planted except in pots.
- Invasive vines, Invasive trees such as Brazilian pepper trees.
- Ear Pod Tree or any tree whose canopy will, when at mature height, cover the roof or rub up against a neighboring mobile home.
- Any tree that will exceed 15 feet at maturity (any tree that you cannot maintain while standing on the ground at full maturity)
- No new installations of fruit trees of any kind will be approved as of June 15,2021.
- The owners of the properties where fruit trees currently exist are responsible for:
  a) The maintenance & trimming of the tree(s).
  b) Removal of fallen fruit on a regular basis as required
  c) Purchase and installation of a fruit tree rodent guard (Available at hardware stores)
- Properly identified fruit trees in common areas of BTP will be removed by the park.

d) The Park is only responsible for maintaining the Palm trees that border the road. All other trees are owned and maintained by the unit owner. If you purchase a unit on which trees (other than the Park owned Palms) or other landscaping has been planted, you are responsible to maintain it.

6.1.3 Borders

a) Borders come in a variety of styles and colors and must be approved by the ARC prior to installation.

b) Borders must be properly installed with cement or rods as required by the manufacturer to ensure that a stable border is formed that cannot be easily toppled over or misaligned by mowers and weed eaters.

c) A diagram of the distance between the garden borders and the unit and any other unit that adjoins the lot where the garden border will be installed.
d) A picture of the border which will indicate the color and configuration of the installation.
e) Soft landscaping must be identified as directed above if this is a new installation
f) All gardens must be maintained year-round which includes mulching, weeding and trimming. No dead plants are to be left in the ground.
g) Borders are subject to dirt and mold and must be cleaned as needed and at least once a year.

6.1.4 Rocks, Stones, Mulch

a) The only approved ground cover is grass. If you wish to remove the grass and install rocks, stones or mulch instead; you must obtain ARC approval. All stone/rock or mulched lawns must be surrounded by a border to control spillage of the medium onto the road or a neighboring lot.
b) Only the following may be installed, with ARC approval:
    1. Brown and/or Tan River rock between 1 and 2 inches in size.
    2. White Pebble between 1 and 2 inches is allowed
    3. Crushed lava rock between 1 and 2 inches
    4. White Marble Nuggets between 1 and 2 inches is allowed
    5. Pine Bark Mulch or rubber mulch
    6. Pea gravel size is not allowed.
    7. Crushed shell or shell of any type is not allowed
    8. Gravel is not allowed
    9. No shaved or colored mulch (this may be used in garden beds only)
    10. Weeds are persistent in the summer and weeds must be controlled all year round.
c) Green Space Requirement - Tropical Palms is within R-4, zoning, where the maximum allowed impervious surface is 70%. The lots are considered existing nonconforming if they are 2000 square feet, as the minimum lot size in R-4 is 3,000 sf, but the standards still apply to the smaller lots. Only an approved permit from the City of Bradenton can supersede this requirement.

6.2 Planters

Older mobile homes have a planter covering the tongue of the trailer. The following are approved planter fill:

a) Flowers or shrubs that are kept weed free and trimmed.
b) White rock which must be maintained weed free, rubber mulch, river rock.
c) All other fills are unacceptable unless approved by the ARC.
d) For further information, see landscaping.

6.3 Fences

a) All applications for fences must include detail as required in Major Projects.
b) Fences may be denied because mowers or weed eaters will lose access to certain areas.

c) Any fences that are approved and lawn areas are no longer accessible, the unit owner is then responsible for maintaining the grass within that area.
d) Chain link fences are not allowed under any circumstances.
e) All fences must be constructed of white PVC.
f) All posts must be capped. The style of cap must be included in the original application.
g) Decorative lattice must be square PVC with 1" thick slats.
h) All fences must have vertical slats.
i) Fences panels must not be taller than 6 (six) feet from the ground including any decorative lattice.
j) Fence posts must be set in concrete with the top of the concrete extending one half ½ a foot around each post so that mowers and weed trimmers will be less likely to damage the fence. Fences posts including post lights must not be taller than six inches above panels.
k) Fences must not extend past the end of the mobile home.
l) Fences must be kept clean and free of mold and algae.
m) Fences must be kept in like new condition.

6.4 Sidewalks

a) ARC application must follow major projects guidelines.
b) Sidewalks may be made of poured concrete, patio stones or pavers.
c) Sidewalks like driveways must be kept free of crack weeds and
d) Need to be cleaned at least once a year to remove dirt, mold and mildew.

6.5 Pavers

a) Pavers are considered an impervious surface (water does not flow through to the ground below). Consequently, pavers are not considered to be part of the 30% green space required around a mobile home. As of February 2022, the ARC Committee are following the City of Bradenton zoning requirement of 30% green space.
b) Green Space Requirement – Bradenton Tropical Palms is within R-4, zoning, where the maximum allowed impervious surface is 70%. The lots are considered existing nonconforming if they are 2000 square feet, as the minimum lot size in R-4 is 3,000 sf, but the standards still apply to the smaller lots. Only an approved permit from the City of Bradenton can supersede this requirement.
c) It is prohibited to park licensed vehicles on pavers at any time.

6.6 Solar Collectors and Rain Barrels

Applications for all solar collectors, except rain barrels, will require a Major Project Application

a) Rain Barrels
    1) The only rain barrels allowed are those for sale through Manatee County's Rain Barrel Program.
    2) Requires Minor Project Application.
    3) The rain barrel must be installed on a cement base or patio stones.
    4) There must be at least six (6) inches of cement or patio stones around the exterior edge of the rain barrel.

5) The rain barrel must be fully functional and kept clean at all times.
6) No weeds will be allowed to grow through cracks.
7) Unit owner must edge around the concrete.

6.7 Seasonal Decorations

a) Seasonal decorations shall not be installed any earlier than one (1) month before and must be removed no later than fifteen (15) days after the date of the holiday.
b) Musical decorations or decorations that make noise must have the sound turned off when the approved resident is not in the residence and must be turned off by ten (10 p.m.) and not turned on before 10 a.m.
c) Bright lights will not be permitted if they disturb a neighbor.
d) Lighting should be placed in a manner as not to shine into neighboring windows.
e) Lights are to be turned off at midnight.
f) No decorations which create a safety hazard will be permitted.
g) Certain string lighting is considered decorative and not seasonal such as rope lighting and decorative patio lights. These lights will be allowed to remain up all year except that they are not allowed to frame the mobile home and windows in the same manner as seasonal lighting would be attached. Non seasonal decorative lighting may be placed inside and on the open side of a carport. Red, white and green Icicle lights are ALWAYS considered seasonal.
h) Extension cords placed on the lawn must be removed on lawn mowing day, unless you have a mulch lawn that does not get mowed.
i) Christmas trees must be disposed of as required by the trash hauler.
j) See "Decorative Flags" under Flags in the Rule Book.

6.8 Pots and Decorative Items

Appreciation of Art is a subjective choice. This is usually taken to mean that it is a matter of personal taste. It is recognized that one person's choice may or may not be that of another. However, if written concerns regarding such art are submitted to the ARC, the art in question will be reviewed by the ARC. If the majority written opinion of the ARC is that such art is inappropriate for display in the park (BTP), then such art must be removed from public display.

a) Recommended Pots are those made of concrete, /faux concrete, or clay/faux clay (glazed or unglazed).
b) No pots are to be placed on the cutting area of the lawn.
c) No artificial flowers, trees or plants, etc. are allowed in these flower pots or in any other exterior gardens unless they are kept in good condition and not faded due to weather conditions.
d) Solar lights must be placed along garden borders and walkways in a manner that will not interfere with the lawn mowers and weed eaters.
e) The Association, Management Company or lawn service vendor shall not be responsible for any damage to the solar lights that may result from maintenance activities.

f) Decorative plaques or other decorative items attached to a unit and/or yard art including but not limited to sculptures, statues and other freestanding or attached works, are limited to no more than 36 inches in height or 36 inches in width.

AHRI CERTIFIED®
www.ahridirectory.org

Certificate of Product Ratings

AHRI Certified Reference Number : 9561666 Date : 10-31-2018 Model Status : Active

AHRI Type : RCU-A-CB

Series : 14 SEER N SERIES R410A AC

Outdoor Unit Brand Name : TEMPSTAR

Outdoor Unit Model Number (Condenser or Single Package) : NXA436(A,G)KC**

Indoor Unit Model Number (Evaporator and/or Air Handler) : FEM4P36**AL

Region : Southeast and North (AL, AR, DC, DE, FL, GA, HI, KY, LA, MD, MS, NC, OK, SC, TN, TX, VA, AK, CO, CT, ID, IL, IA, IN, KS, MA, ME, MI, MN, MO, MT, ND, NE, NH, NJ, NY, OH, OR, PA, RI, SD, UT, VT, WA, WV, WI, WY, U.S. Territories)

Region Note : Central air conditioners manufactured prior to January 1, 2015 are eligible to be installed in all regions until June 30, 2016. Beginning July 1, 2016 central air conditioners can only be installed in region(s) for which they meet the regional efficiency requirement.

The manufacturer of this TEMPSTAR product is responsible for the rating of this system combination.

Rated as follows in accordance with the latest edition of ANSI/AHRI 210/240 with Addenda 1 and 2, Performance Rating of Unitary Air-Conditioning & Air-Source Heat Pump Equipment and subject to rating accuracy by AHRI-sponsored, independent, third party testing:

Cooling Capacity (A2) - Single or High Stage (95F), btuh : 33000

SEER : 14.00

EER (A2) - Single or High Stage (95F) : 12.00

†"Active" Model Status are those that an AHRI Certification Program Participant is currently producing AND selling or offering for sale; OR new models that are being marketed but are not yet being produced."Production Stopped" Model Status are those that an AHRI Certification Program Participant is no longer producing BUT is still selling or offering for sale.
Ratings that are accompanied by WAS indicate an involuntary re-rate. The new published rating is shown along with the previous (i.e. WAS) rating.

DISCLAIMER
AHRI does not endorse the product(s) listed on this Certificate and makes no representations, warranties or guarantees as to, and assumes no responsibility for, the product(s) listed on this Certificate. AHRI expressly disclaims all liability for damages of any kind arising out of the use or performance of the product(s), or the unauthorized alteration of data listed on this Certificate. Certified ratings are valid only for models and configurations listed in the directory at www.ahridirectory.org.

TERMS AND CONDITIONS
This Certificate and its contents are proprietary products of AHRI. This Certificate shall only be used for individual, personal and confidential reference purposes. The contents of this Certificate may not, in whole or in part, be reproduced; copied; disseminated; entered into a computer database; or otherwise utilized, in any form or manner or by any means, except for the user's individual, personal and confidential reference.

AHRI
AIR CONDITIONING, HEATING, & REFRIGERATION INSTITUTE
we make life better™

CERTIFICATE VERIFICATION
The information for the model cited on this certificate can be verified at www.ahridirectory.org, click on "Verify Certificate" link and enter the AHRI Certified Reference Number and the date on which the certificate was issued, which is listed above, and the Certificate No., which is listed at bottom right.

©2018 Air-Conditioning, Heating, and Refrigeration Institute

CERTIFICATE NO.: 131854871719599106

MIAMI TECH, INC.

MECHANICAL UNIT STEEL TIE-DOWN CLIP: AT GRADE & ROOF-TOP MOUNTED APPLICATIONS

NON-SITE-SPECIFIC STRUCTURAL PERFORMANCE EVALUATION. A DESIGN PROFESSIONAL SHALL BE RESPONSIBLE FOR CERTIFYING THE APPLICATION OF THIS INFORMATION TO ANY SITE-SPECIFIC LOCATION.

FRANK BENNARDO, PE
PE# 0046549 CA# 9885

FRANK L. BENNARDO LICENSE No 0046549 STATE OF FLORIDA PROFESSIONAL ENGINEER

Digitally signed by Frank Bennardo
Date: 2023.08.21 10:44:34 -04'00'

FL19731.2

STEEL TIE-DOWN CLIP

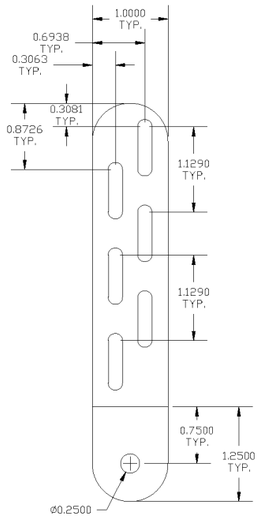

1/1 4" LONG CLIP
N.T.S. FLATTENED

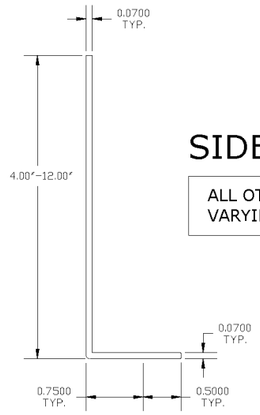

SIDE VIEW TYP.

ALL OTHER CLIPS SIMILAR VARYING LENGTH ONLY

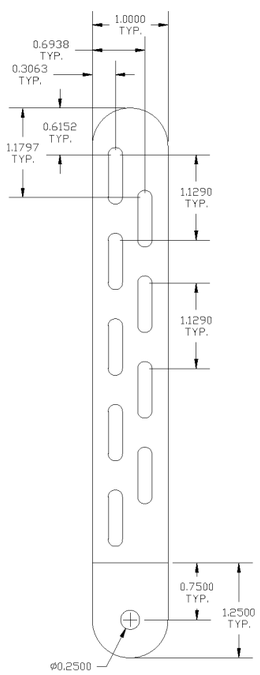

2/1 6" LONG CLIP
N.T.S. FLATTENED

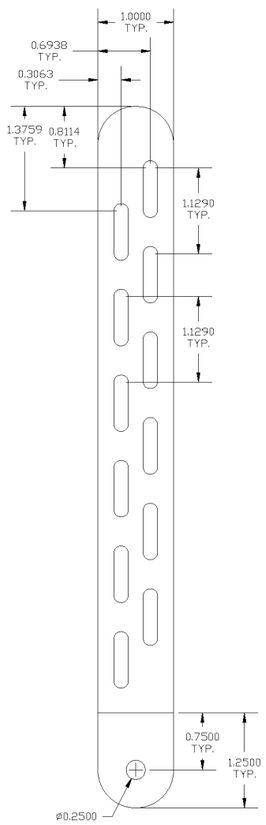

3/1 8" LONG CLIP
N.T.S. FLATTENED

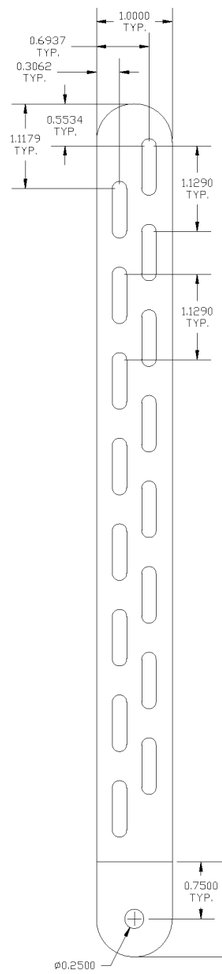

4/1 10" LONG CLIP
N.T.S. FLATTENED

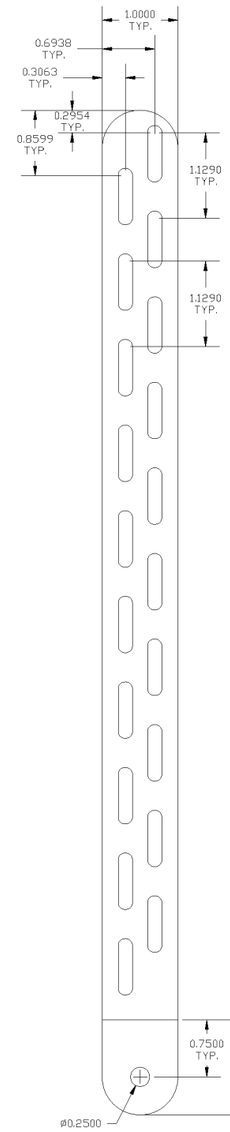

5/1 12" LONG CLIP
N.T.S. FLATTENED

NOTE REGARDING USE OF THIS DOCUMENT & USE OUTSIDE FLORIDA:

NON-SITE-SPECIFIC STRUCTURAL PERFORMANCE EVALUATION. THIS PRODUCT EVALUATION IS VALID FOR USE IN **FLORIDA ONLY**. USE OF THIS EVALUATION REQUIRES A REVIEW & CERTIFICATION BY A LOCAL DESIGN PROFESSIONAL WHO SHALL BE RESPONSIBLE FOR THE PROPER ADAPTATION OF THIS GENERAL PERFORMANCE EVALUATION TO ANY SITE-SPECIFIC PROJECT. CONTACT THIS OFFICE AT **ENGINEERINGEXPRESS.COM/QUOTE** FOR ASSISTANCE WITH YOUR PROJECT-SPECIFIC NEEDS & FOR ADAPTATION & CERTIFICATION OF THIS DOCUMENT OUTSIDE OF FLORIDA.

DESIGN NOTES:

1. THIS PRODUCT HAS BEEN DESIGNED IN ACCORDANCE WITH ASCE 7-22 AND THE FLORIDA BUILDING CODE 8th EDITION (2023) FOR USE WITHIN AND OUTSIDE THE HIGH VELOCITY HURRICANE ZONE AS INDICATED IN THE ACCOMPANYING DESIGN SCHEDULES. THE DESIGN CRITERIA USED TO CALCULATE THE ALLOWABLE ROOF-TOP HEIGHTS CONSIDERS FBC CHAPTER 16: $(GC_f)_{Lateral}$=1.90 WITHIN THE HVHZ & OUTSIDE THE HVHZ, $(GC_f)_{Uplift}$=1.5 FOR ALL LOCATIONS (CONCURRENT).
2. ALL OTHER DESIGN VARIABLES ARE IN ACCORDANCE WITH ASCE 7 CHAPTERS 26 & 29.
3. THE HEIGHTS LISTED IN THE DESIGN SCHEDULES REPRESENT THE ALLOWABLE HEIGHT OF THE BUILDING.
4. THIS PRODUCT APPROVAL ALLOWS FOR EACH UNIT TO BE INSTALLED ON A MAXIMUM 30" TALL A/C STAND (CERTIFICATION BY OTHERS) ON TOP OF THE HEIGHTS LISTED IN THE DESIGN SCHEDULES.
5. NO 33-1/3% INCREASE IN ALLOWABLE STRESS HAS BEEN USED IN THE DESIGN OF THIS SYSTEM.
6. DESIGN IS BASED ON CLIENT PROVIDED PRODUCT AND DIE SHEETS FROM TEST REPORT PROJECT #15-6206 BY FENESTRATION TESTING LABORATORY, INC.. NO SUBSTITUTIONS WITHOUT WRITTEN APPROVAL BY THIS ENGINEER SHALL BE PERMITTED.
7. STEEL CLIPS SHALL BE ASTM A653 STEEL WITH Fy=33 KSI OR BETTER. STEEL MEMBERS SHALL BE PROTECTED AGAINST CORROSION WITH AN APPROVED COAT OF PAINT, ENAMEL OR OTHER APPROVED PROTECTION. G90-RATED COATING REQUIRED FOR COASTAL INSTALLATIONS.

GENERAL NOTES:

1. THIS PRODUCT HAS BEEN DESIGNED AND SHALL BE FABRICATED IN ACCORDANCE WITH THE REQUIREMENTS OF THE FLORIDA BUILDING CODE & ASCE 7. THIS PRODUCT MAY BE USED WITHIN AND OUTSIDE THE HIGH VELOCITY HURRICANE ZONE.
2. MAXIMUM & MINIMUM DIMENSIONS AND MINIMUM WEIGHT OF MECHANICAL UNIT SHALL CONFORM TO SPECIFICATIONS STATED HEREIN. ALL MECHANICAL SPECIFICATIONS (CLEAR SPACE, TONNAGE, ETC.) SHALL BE AS PER MANUFACTURER RECOMMENDATIONS AND ARE THE EXPRESS RESPONSIBILITY OF THE CONTRACTOR.
3. FASTENERS TO BE #10 X ¾" OR GREATER STAINLESS STEEL 410 UNLESS NOTED OTHERWISE. ANCHORS REFERRED TO HEREIN SHALL BE ELCO BRAND, STAINLESS STEEL ONLY, INSTALLED TO 3000 PSI MIN CONCRETE. SEE ANCHOR TO HOST SCHEDULE FOR ANCHOR REQUIREMENTS. ALL FASTENERS SHALL HAVE APPROPRIATE CORROSION PROTECTION TO PREVENT ELECTROLYSIS.
4. ALL CONCRETE SPECIFIED HEREIN IS NOT PART OF THIS CERTIFICATION. AS A MINIMUM, ALL CONCRETE SHALL BE STRUCTURAL CONCRETE 4" MIN. THICK AND SHALL HAVE MINIMUM COMPRESSIVE STRENGTH OF 3000 PSI, UNLESS NOTED OTHERWISE.
5. THE CONTRACTOR IS RESPONSIBLE TO INSULATE ALL MEMBERS FROM DISSIMILAR MATERIALS TO PREVENT ELECTROLYSIS.
6. ELECTRICAL GROUND, WHEN REQUIRED, TO BE DESIGNED & INSTALLED BY OTHERS.
7. THE ADEQUACY OF ANY EXISTING STRUCTURE TO WITHSTAND SUPERIMPOSED LOADS SHALL BE VERIFIED BY THE ONSITE DESIGN PROFESSIONAL AND IS NOT INCLUDED IN THIS CERTIFICATION.EXCEPT AS EXPRESSLY PROVIDED HEREIN, NO ADDITIONAL CERTIFICATIONS OR AFFIRMATIONS ARE INTENDED.
8. THE SYSTEM DETAILED HEREIN IS GENERIC & DOES NOT PROVIDE INFORMATION FOR A SPECIFIC SITE. THESE PLANS SHALL BE USED ALONG WITH SITE SPECIFIC PLANS & INFORMATION BY OTHERS TO CONSTITUTE APPROVAL FOR PERMIT & CONSTRUCTION.
9. WATER-TIGHTNESS OF EXISTING HOST SUBSTRATE SHALL BE THE FULL RESPONSIBILITY OF THE INSTALLING CONTRACTOR. CONTRACTOR SHALL ENSURE THAT ANY REMOVED OR ALTERED WATERPROOFING MEMBRANE IS RESTORED AFTER FABRICATION AND INSTALLATION OF STRUCTURE PROPOSED HEREIN. THIS ENGINEER SHALL NOT BE RESPONSIBLE FOR ANY WATERPROOFING OR LEAKAGE ISSUES WHICH MAY OCCUR AS WATER-TIGHTNESS SHALL BE THE FULL RESPONSIBILITY OF THE INSTALLING CONTRACTOR.
10. FOR AN EXPLANATION OF EXPOSURE AND RISK CATEGORIES THAT ACCOMPANY THE Vult WIND SPEEDS USED IN THIS APPROVAL, SEE ASCE 7.

VISIT ECALC.IO/61594

FOR SITE SPECIFIC DEVIATIONS & MORE INFORMATION ABOUT THIS DOCUMENT OR SCAN THIS QR CODE

VISIT ENGINEERINGEXPRESS.COM/MIAMITECH FOR ADDITIONAL PLANS, REPORTS & RESOURCES

ENGINEERING EXPRESS®
POSTAL ADDRESS:
401 W. ATLANTIC AVE R10 BOX 219
DELRAY BEACH, FL 33444
ENGINEERINGEXPRESS.COM

MIAMI TECH, INC
361 NW, 74TH ST
MIAMI, FL 33147
(305) 693 - 7054

MIAMI TECH TIE DOWN CLIP
FL STATEWIDE APPROVAL
FLORIDA BUILDING CODE

REMARKS	DRWN	CHKD	DATE
INIT ISSUE	LAO	TSB	2/05/16
2017 FBC	LAO	FLB	8/14/17
2020 FBC	CCB	RWN	6/09/20
2021 FORMATTING	CCH	RWN	11/19/21
2023 FBC	RN	RN	8-15-23

COPYRIGHT ENGINEERING EXPRESS®

23-61594

SCALE: NTS UNLESS NOTED

8/18/2023 5:26 PM RICKN c:\users\rickn\engineering express\production - documents\projects\23-\23-61594 multiple products 2023 fbc update fl19731\2023 fbc\work\drawings & cad\23-61594b-fl19731.2-doc.dwg

8/18/2023 5:26 PM RICKN c:\users\rickn\engineering express\production - documents\projects\23-\23-61594 multiple products 2023 fbc update fl19731\2023 fbc\work\drawings & cad\23-61594b-fl19731.2-doc.dwg

FRANK BENNARDO, PE
PE# 0046549 CA# 9885

FRANK L. BENNARDO LICENSE No PE0046549 STATE OF FLORIDA PROFESSIONAL ENGINEER
08/21/2023

FL19731.2

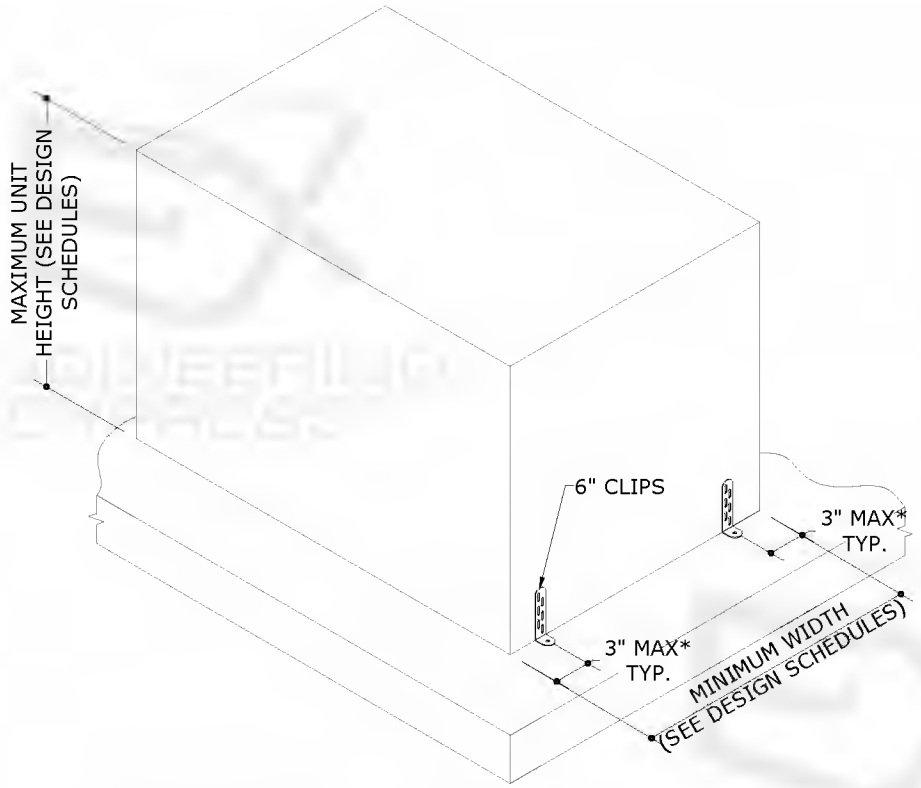

C1 CONNECTION TYPE C1

1"X6" CLIP - UTILIZE (1) AT EACH CORNER FOR A TOTAL OF (4) PER UNIT
NOTE: ALSO APPLICABLE FOR CLIP 4" LONG

*NOTE: SEE ANCHOR TO HOST SCHEDULE FOR ALL EDGE DISTANCE TO ANCHOR SPACING LIMITATIONS. SEE PAGE 4.

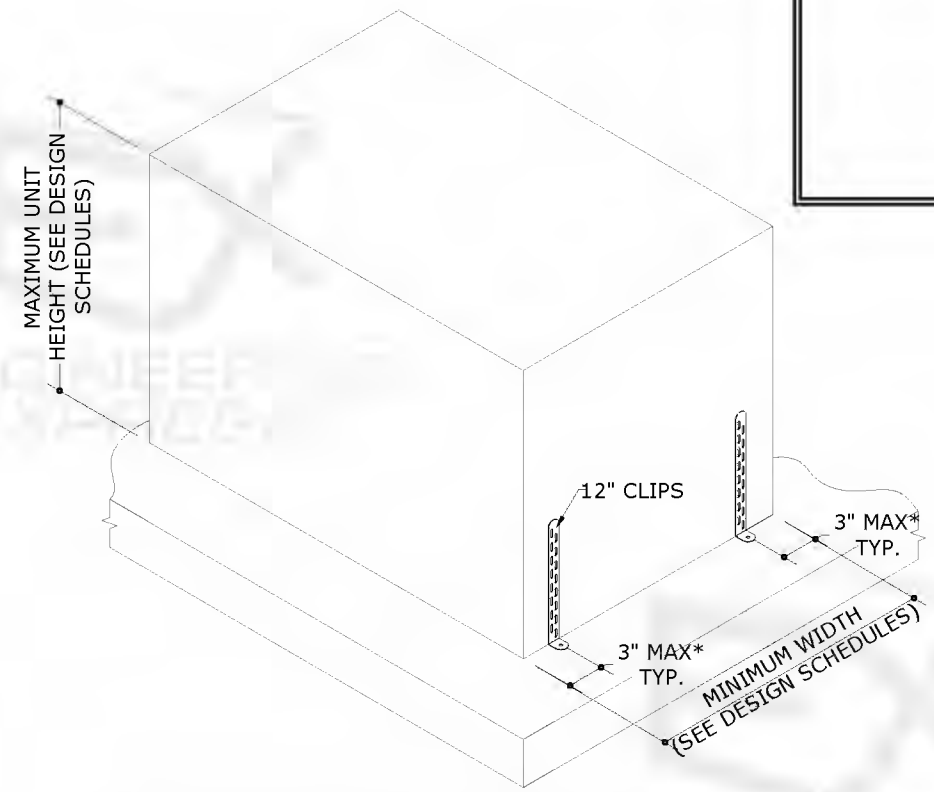

C3 CONNECTION TYPE C3

1"X12" CLIP - UTILIZE (1) AT EACH CORNER FOR A TOTAL OF (4) PER UNIT
NOTE: ALSO APPLICABLE FOR CLIPS 8" & 10" LONG

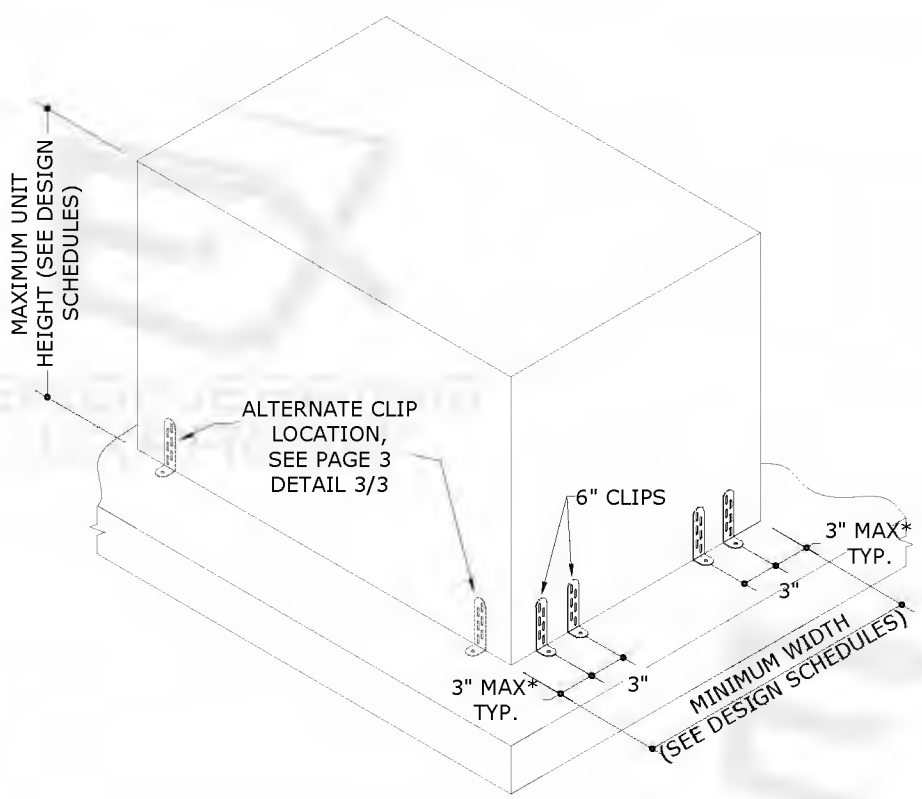

C2 CONNECTION TYPE C2

1"X6" CLIP - UTILIZE (2) AT EACH CORNER FOR A TOTAL OF (8) PER UNIT
NOTE: ALSO APPLICABLE FOR CLIP 4" LONG

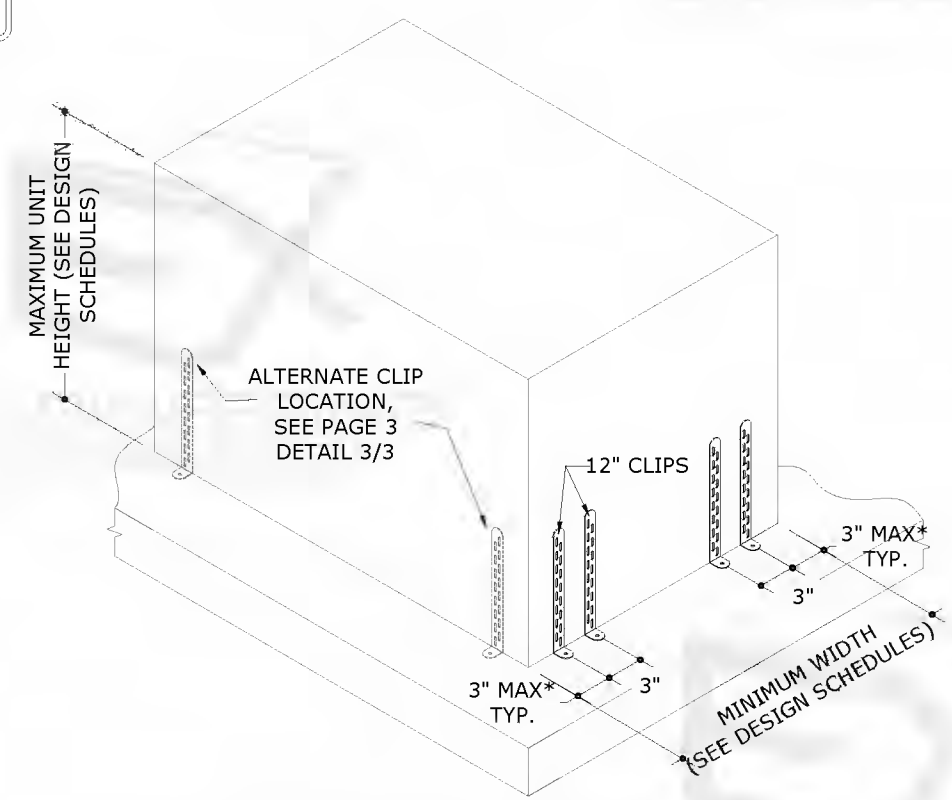

C4 CONNECTION TYPE C4

1"X12" CLIP - UTILIZE (2) AT EACH CORNER FOR A TOTAL OF (8) PER UNIT
NOTE: ALSO APPLICABLE FOR CLIPS 8" & 10" LONG

STEEL TIE-DOWN CLIP

ENGINEERING EXPRESS®
POSTAL ADDRESS:
401 W. ATLANTIC AVE R10 BOX 219
DELRAY BEACH, FL 33444
ENGINEERINGEXPRESS.COM

MIAMI TECH, INC
361 NW, 74TH ST
MIAMI, FL 33147
(305) 693 - 7054

MIAMI TECH TIE DOWN CLIP
FL STATEWIDE APPROVAL
FLORIDA BUILDING CODE

REMARKS	DRWN	CHKD	DATE
INIT ISSUE	LAO	TSB	2/05/16
2017 FBC	LAO	FLB	8/14/17
2020 FBC	CCB	RWN	6/09/20
2021 FORMATTING	CCH	RWN	11/19/21
2023 FBC	RN	RN	8-15-23

COPYRIGHT ENGINEERING EXPRESS®

23-61594

SCALE: NTS UNLESS NOTED

ATTACHMENT TO STAND

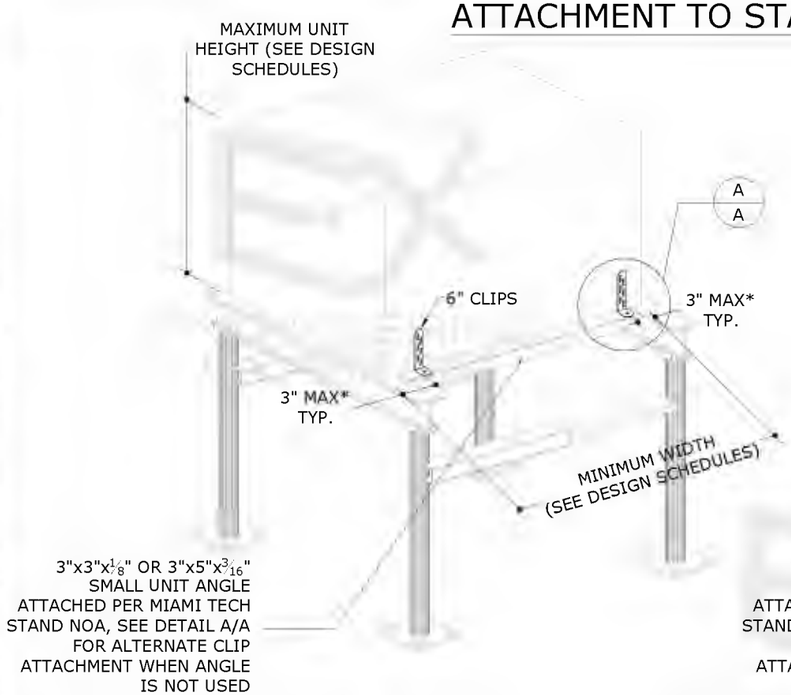

C1 CONNECTION TYPE C1

1"X6" CLIP - UTILIZE (1) AT EACH CORNER FOR A TOTAL OF (4) PER UNIT

NOTE: ALSO APPLICABLE FOR CLIP 4" LONG

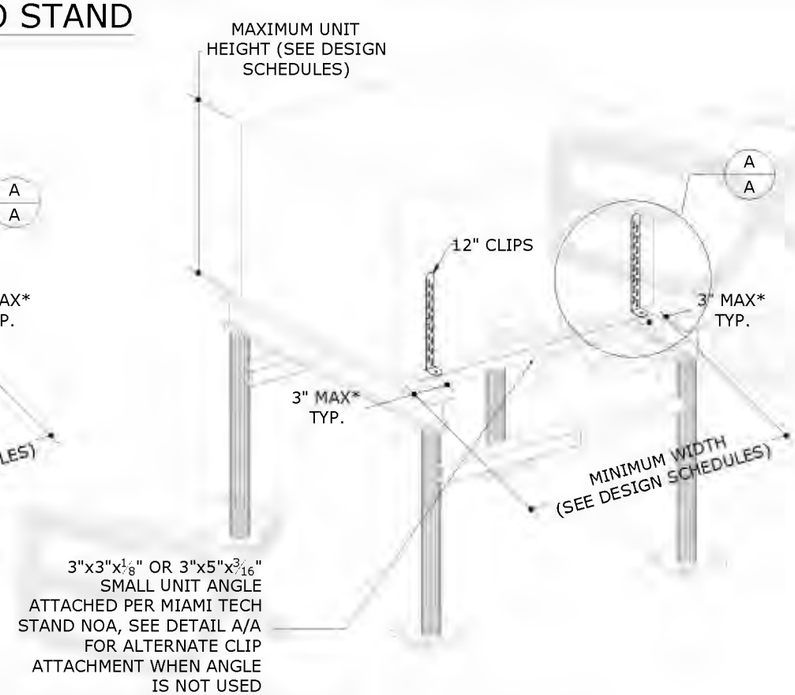

C3 CONNECTION TYPE C3

1"X12" CLIP - UTILIZE (1) AT EACH CORNER FOR A TOTAL OF (4) PER UNIT

NOTE: ALSO APPLICABLE FOR CLIPS 8" & 10" LONG

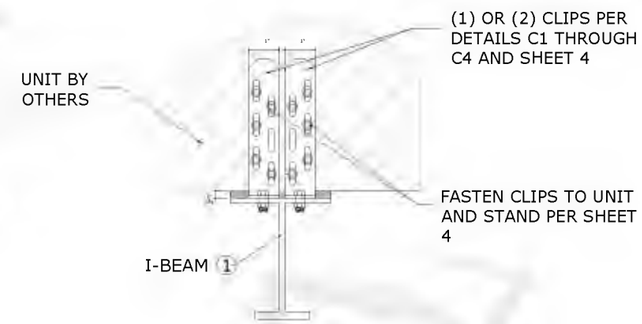

A/A ALTERNATE CLIP TO STAND DETAIL

SCALE: N.T.S.

*NOTE: SEE ANCHOR TO HOST SCHEDULE FOR ALL EDGE DISTANCE TO ANCHOR SPACING LIMITATIONS. SEE PAGE 4.

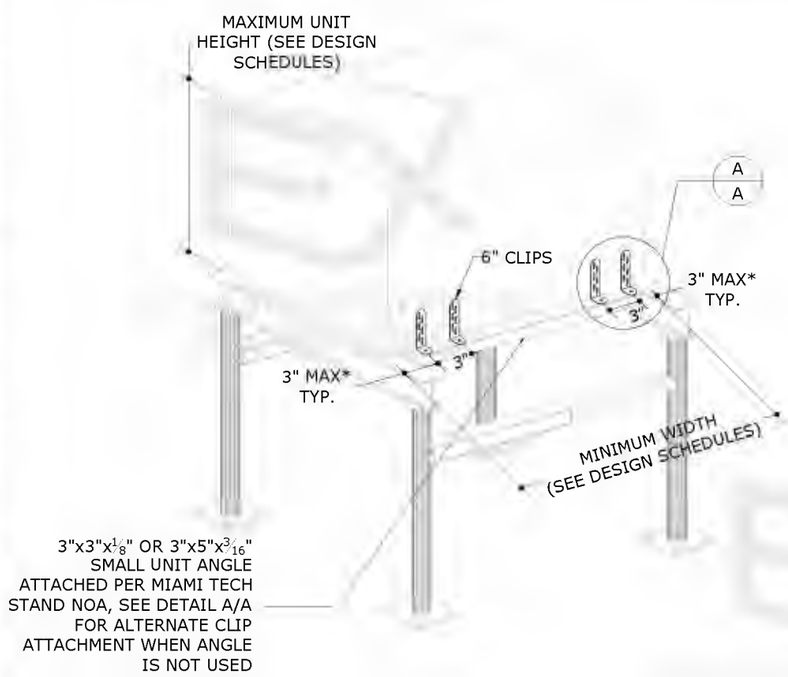

C2 CONNECTION TYPE C2

1"X6" CLIP - UTILIZE (2) AT EACH CORNER FOR A TOTAL OF (8) PER UNIT

NOTE: ALSO APPLICABLE FOR CLIP 4" LONG

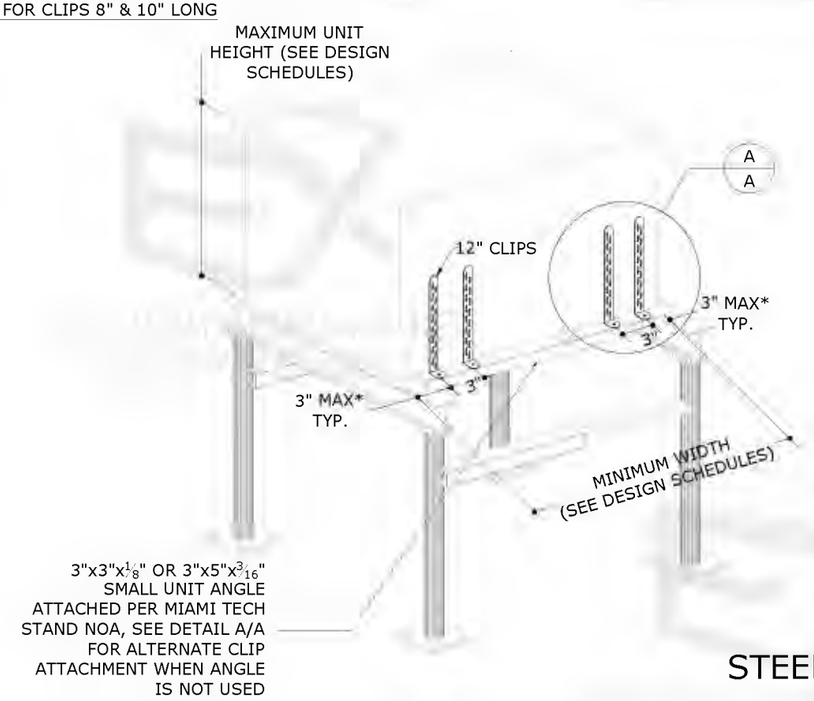

C4 CONNECTION TYPE C4

1"X12" CLIP - UTILIZE (2) AT EACH CORNER FOR A TOTAL OF (8) PER UNIT

NOTE: ALSO APPLICABLE FOR CLIPS 8" & 10" LONG

STEEL TIE-DOWN CLIP

FRANK BENNARDO, PE
PE# 0046549 CA# 9885

FRANK L. BENNARDO LICENSE No PE0046549 STATE OF FLORIDA PROFESSIONAL ENGINEER
08/21/2023

FL19731.2

ENGINEERING EXPRESS®
POSTAL ADDRESS:
401 W. ATLANTIC AVE R10 BOX 219
DELRAY BEACH, FL 33444
ENGINEERINGEXPRESS.COM

MIAMI TECH, INC
361 NW, 74TH ST
MIAMI, FL 33147
(305) 693 - 7054

MIAMI TECH TIE DOWN CLIP
FL STATEWIDE APPROVAL
FLORIDA BUILDING CODE

REMARKS	DRWN	CHKD	DATE
INIT ISSUE	LAO	TSB	2/05/16
2017 FBC	LAO	FLB	8/14/17
2020 FBC	CCB	RWN	6/09/20
2021 FORMATTING	CCH	RWN	11/19/21
2023 FBC	RN	RN	8-15-23

COPYRIGHT ENGINEERING EXPRESS®

23-61594

SCALE: NTS UNLESS NOTED

8/18/2023 5:26 PM RICKN c:\users\rickn\engineering express\production - documents\projects\23\23-61594 multiple products 2023 fbc update fl19731\2023 fbc\work drawings & cad\23-61594b-fl19731.2-doc.dwg

8/18/2023 5:26 PM RICKN c:\users\rickn\engineering express\production - documents\projects\23-\23-61594 multiple products 2023 fbc update fl19731\2023 fbc\work\drawings & cad\23-61594b-fl19731.2-doc.dwg

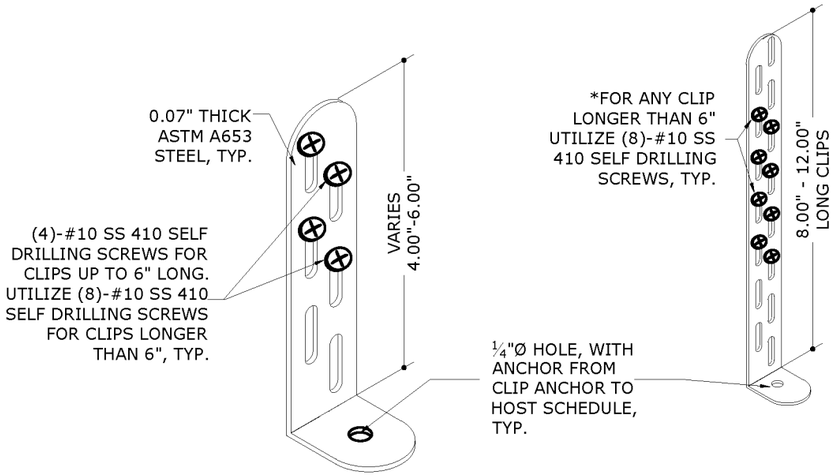

1/4 1" CLIP ISOMETRIC DETAIL

N.T.S. ISOMETRIC

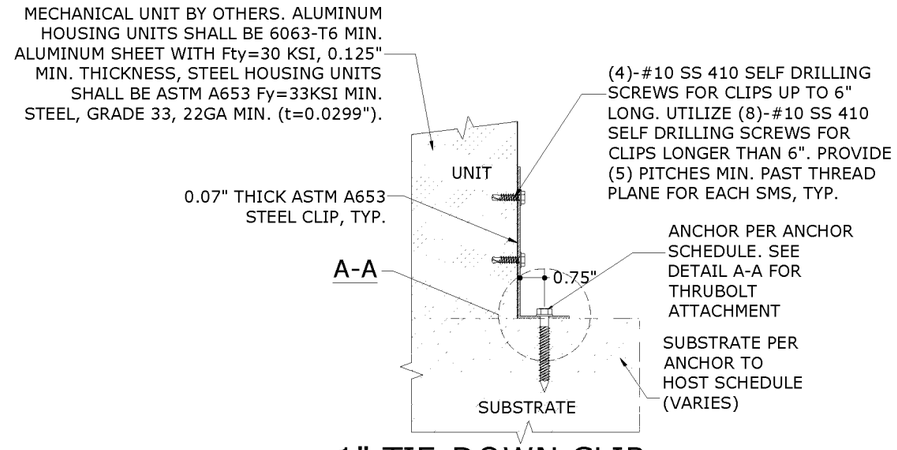

2/4 1" TIE-DOWN CLIP ANCHOR DETAIL

3" = 1'-0" DETAIL

CLIP IS DESIGNED FOR FULL CONTACT WITH THE BASE OF EACH MECHANICAL UNIT, TYP.

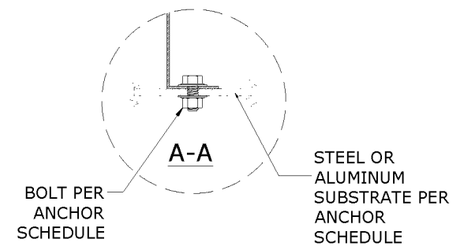

ANCHOR TO HOST SCHEDULE:

SUBSTRATE	DESCRIPTION
CONCRETE: (4" THICK MIN, 3000 PSI MIN.)	(1)-1/4"Ø STAINLESS STEEL 410 DEWALT ULTRACON, 1¾" FULL EMBED TO CONCRETE, 2½" MIN. EDGE DISTANCE, 3" MIN. SPACING TO ANY ADJACENT ANCHOR.
ALUMINUM: (0.125" MIN. THICK, 6061-T6 MIN. ALUMINUM)	(1)-#14 SAE STAINLESS STEEL BOLT 410 WITH NUT AND WASHER TOP & BOTTOM SS OD 1", ½" MINIMUM EDGE DISTANCE TO METAL EDGE
STEEL: (0.125" MIN. THICK, 50 KSI MIN. STEEL)	(1)-#14 SAE STAINLESS STEEL BOLT 410 WITH NUT AND WASHER TOP & BOTTOM SS OD 1", ½" MINIMUM EDGE DISTANCE TO METAL EDGE

1. EMBEDMENT AND EDGE DISTANCE EXCLUDES FINISHES, IF APPLICABLE.
2. ENSURE MINIMUM EDGE DISTANCE AS NOTED IN ANCHOR SCHEDULE.
3. ENSURE MINIMUM SPACING TO ANY ADJACENT ANCHORS.
4. SEE DETAILS ON SHEET 4 FOR ANCHORS ATTACHING TO MECHANICAL UNIT.
5. PROTECT ALL METALS FROM DISSIMILAR METALS GENERAL NOTE #5

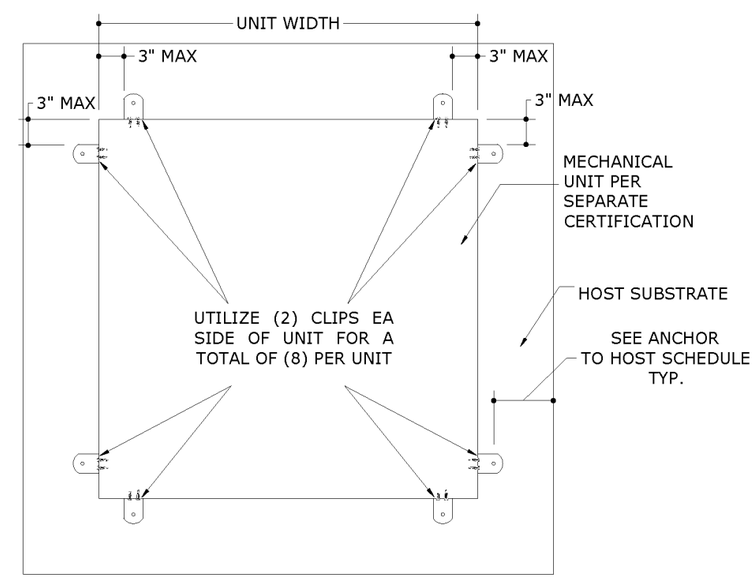

3/4 ALTERNATE (8) CLIP DETAIL

N.T.S. PLAN VIEW

THIS DETAIL MAY BE USED AS AN ALTERNATE GEOMETRIC PATTERN FOR ALL CONNECTION TYPES THAT UTILIZE (2) CLIPS AT EACH CORNER FOR A TOTAL OF (8) CLIPS PER UNIT.

STEEL TIE-DOWN CLIP

FRANK BENNARDO, PE
PE# 0046549 CA# 9885

FRANK L. BENNARDO LICENSE No PE0046549 STATE OF FLORIDA PROFESSIONAL ENGINEER
08/21/2023

FL19731.2

ENGINEERING EXPRESS®
POSTAL ADDRESS:
401 W. ATLANTIC AVE R10 BOX 219
DELRAY BEACH, FL 33444
ENGINEERINGEXPRESS.COM

MIAMI TECH, INC
361 NW, 74TH ST
MIAMI, FL 33147
(305) 693 - 7054

MIAMI TECH TIE DOWN CLIP
FL STATEWIDE APPROVAL
FLORIDA BUILDING CODE

REMARKS	DRWN	CHKD	DATE
INIT ISSUE	LAO	TSB	2/05/16
2017 FBC	LAO	FLB	8/14/17
2020 FBC	CCB	RWN	6/09/20
2021 FORMATTING	CCH	RWN	11/19/21
2023 FBC	RN	RN	8-15-23

COPYRIGHT ENGINEERING EXPRESS®

23-61594

SCALE: NTS UNLESS NOTED

FRANK BENNARDO, PE
PE# 0046549 CA# 9885

FRANK L. BENNARDO LICENSE No PE0046549 STATE OF FLORIDA PROFESSIONAL ENGINEER
08/21/2023

TABLE 1 PERMISSIBLE INSTALLATION HEIGHTS: Vult=175 MPH, EXPOSURE C

(FOR USE WITH A RISK CATEGORY II STRUCTURE IN THE HIGH VELOCITY HURRICANE ZONE (HVHZ)*)
RISK CATEGORY II IS PER ASCE 7-16

MAXIMUM SURFACE AREA OF UNIT'S LARGEST FACE	UNIT HEIGHT	UNIT WIDTH	ALLOWABLE ROOF-TOP HEIGHT (H) TIE-DOWN CONFIGURATION TYPE			
			C1	C2	C3	C4
6 FT²	29" MAX	15" MIN	AT GRADE	H ≤ 200 FT	AT GRADE	H ≤ 200 FT
9 FT²	36" MAX	27" MIN	AT GRADE	H ≤ 200 FT	AT GRADE	H ≤ 200 FT
4 FT²	48" MAX	36" MIN	H ≤ 160 FT	H ≤ 200 FT	H ≤ 200 FT	H ≤ 200 FT
6 FT²			H ≤ 15 FT	H ≤ 200 FT	H ≤ 30 FT	H ≤ 200 FT
9 FT²			AT GRADE	H ≤ 200 FT	AT GRADE	H ≤ 200 FT
12 FT²			N/A	H ≤ 60 FT	N/A	H ≤ 100 FT
16 FT²			N/A	H ≤ 15 FT	N/A	H ≤ 15 FT
20 FT²	60" MAX	48" MIN	N/A	AT GRADE	N/A	AT GRADE
25 FT²			N/A	AT GRADE	N/A	AT GRADE
30 FT²			N/A	N/A	N/A	N/A
36 FT²			N/A	N/A	N/A	N/A

*THIS TABLE IS PERMISSIBLE TO BE USED WITHIN THE **HVHZ** WHICH CONTAINS BROWARD AND MIAMI-DADE COUNTIES. CHECK WITH LOCAL AUTHORITY HAVING JURISDICTION FOR THE APPLICABILITY OF THIS TABLE WITHIN CERTAIN FLORIDA COUNTIES.

TABLE 2 PERMISSIBLE INSTALLATION HEIGHTS: Vult=175 MPH, EXPOSURE D

(FOR USE WITH A RISK CATEGORY II STRUCTURE IN THE HIGH VELOCITY HURRICANE ZONE (HVHZ)*)
RISK CATEGORY II IS PER ASCE 7-16

MAXIMUM SURFACE AREA OF UNIT'S LARGEST FACE	UNIT HEIGHT	UNIT WIDTH	ALLOWABLE ROOF-TOP HEIGHT (H) TIE-DOWN CONFIGURATION TYPE			
			C1	C2	C3	C4
6 FT²	29" MAX	15" MIN	N/A	H ≤ 200 FT	AT GRADE	H ≤ 200 FT
9 FT²	36" MAX	27" MIN	N/A	H ≤ 140FT	N/A	H ≤ 200 FT
4 FT²	48" MAX	36" MIN	H ≤ 80 FT	H ≤ 200 FT	H ≤ 140FT	H ≤ 200 FT
6 FT²			AT GRADE	H ≤ 200 FT	AT GRADE	H ≤ 200 FT
9 FT²			N/A	H ≤ 160 FT	AT GRADE	H ≤ 200 FT
12 FT²			N/A	H ≤ 30 FT	N/A	H ≤ 40 FT
16 FT²			N/A	AT GRADE	N/A	AT GRADE
20 FT²	60" MAX	48" MIN	N/A	AT GRADE	N/A	AT GRADE
25 FT²			N/A	N/A	N/A	N/A
30 FT²			N/A	N/A	N/A	N/A
36 FT²			N/A	N/A	N/A	N/A

*THIS TABLE IS PERMISSIBLE TO BE USED WITHIN THE **HVHZ** WHICH CONTAINS BROWARD AND MIAMI-DADE COUNTIES. CHECK WITH LOCAL AUTHORITY HAVING JURISDICTION FOR THE APPLICABILITY OF THIS TABLE WITHIN CERTAIN FLORIDA COUNTIES.

TABLE 3 PERMISSIBLE INSTALLATION HEIGHTS: Vult=170 MPH, EXPOSURE C

(FOR USE WITH A RISK CATEGORY II STRUCTURE**)
RISK CATEGORY II IS PER ASCE 7-16

MAXIMUM SURFACE AREA OF UNIT'S LARGEST FACE	UNIT HEIGHT	UNIT WIDTH	ALLOWABLE INSTALLATION ROOF HEIGHT TIE-DOWN CONFIGURATION TYPE			
			C1	C2	C3	C4
6 ft²	29 in	15 in	AT GRADE	≤ 200 FT	AT GRADE	≤ 200 FT
9 ft²	36 in	27 in	AT GRADE	≤ 200 FT	AT GRADE	≤ 200 FT
4 ft²	48 in	36 in	≤ 200 FT	≤ 200 FT	≤ 200 FT	≤ 200 FT
6 ft²	48 in	36 in	H ≤ 30 FT	≤ 200 FT	H ≤ 40 FT	≤ 200 FT
9 ft²	48 in	36 in	AT GRADE	≤ 200 FT	AT GRADE	≤ 200 FT
12 ft²	48 in	36 in	N/A	≤ 80 FT	N/A	≤ 140 FT
16 ft²	48 in	36 in	N/A	H ≤ 15 FT	N/A	H ≤ 30 FT
20 ft²	60 in	48 in	N/A	AT GRADE	N/A	AT GRADE
25 ft²	60 in	48 in	N/A	AT GRADE	N/A	AT GRADE
30 ft²	60 in	48 in	N/A	N/A	N/A	AT GRADE
36 ft²	60 in	48 in	N/A	N/A	N/A	N/A

TABLE 4 PERMISSIBLE INSTALLATION HEIGHTS: Vult=170 MPH, EXPOSURE D

(FOR USE WITH A RISK CATEGORY II STRUCTURE**)
RISK CATEGORY II IS PER ASCE 7-16

MAXIMUM SURFACE AREA OF UNIT'S LARGEST FACE	UNIT HEIGHT	UNIT WIDTH	ALLOWABLE INSTALLATION ROOF HEIGHT TIE-DOWN CONFIGURATION TYPE			
			C1	C2	C3	C4
6 ft²	29 in	15 in	AT GRADE	≤ 200 FT	AT GRADE	≤ 200 FT
9 ft²	36 in	27 in	N/A	≤ 200 FT	AT GRADE	≤ 200 FT
4 ft²	48 in	36 in	≤ 120 FT	≤ 200 FT	≤ 200 FT	≤ 200 FT
6 ft²	48 in	36 in	AT GRADE	≤ 200 FT	H ≤ 15 FT	≤ 200 FT
9 ft²	48 in	36 in	N/A	≤ 200 FT	AT GRADE	≤ 200 FT
12 ft²	48 in	36 in	N/A	H ≤ 40 FT	N/A	H ≤ 60 FT
16 ft²	48 in	36 in	N/A	AT GRADE	N/A	AT GRADE
20 ft²	60 in	48 in	N/A	AT GRADE	N/A	AT GRADE
25 ft²	60 in	48 in	N/A	N/A	N/A	N/A
30 ft²	60 in	48 in	N/A	N/A	N/A	N/A
36 ft²	60 in	48 in	N/A	N/A	N/A	N/A

**AS AN EXAMPLE, THESE TABLES ARE PERMISSIBLE TO BE USED WITHIN PALM BEACH COUNTY. CHECK WITH LOCAL AUTHORITY HAVING JURISDICTION FOR THE APPLICABILITY OF THESE TABLES WITHIN CERTAIN FLORIDA COUNTIES.

STEEL TIE-DOWN CLIP

FL19731.2

ENGINEERING EXPRESS®
POSTAL ADDRESS:
401 W. ATLANTIC AVE R10 BOX 219
DELRAY BEACH, FL 33444
ENGINEERINGEXPRESS.COM

MIAMI TECH, INC
361 NW, 74TH ST
MIAMI, FL 33147
(305) 693 - 7054

MIAMI TECH TIE DOWN CLIP
FL STATEWIDE APPROVAL
FLORIDA BUILDING CODE

REMARKS	DRWN	CHKD	DATE
INIT ISSUE	LAO	TSB	2/05/16
2017 FBC	LAO	FLB	8/14/17
2020 FBC	CCB	RWN	6/09/20
2021 FORMATTING	CCH	RWN	11/19/21
2023 FBC	RN	RN	8-15-23

COPYRIGHT ENGINEERING EXPRESS®

23-61594

SCALE: NTS UNLESS NOTED

8/18/2023 5:26 PM RICKN c:\users\rickn\engineering express\production - documents\projects\23-\23-61594 multiple products 2023 fbc update fl19731\2023 fbc\work\drawings & cad\23-61594b-fl19731.2-doc.dwg

FRANK BENNARDO, PE
PE# 0046549 CA# 9885

FRANK L. BENNARDO LICENSE No PE0046549 STATE OF FLORIDA PROFESSIONAL ENGINEER
08/21/2023

FL19731.2

TABLE 5 PERMISSIBLE INSTALLATION HEIGHTS: Vult=140 MPH, EXPOSURE B

(FOR USE WITH A RISK CATEGORY II STRUCTURE***)
RISK CATEGORY II IS PER ASCE 7-16

MAXIMUM SURFACE AREA OF UNIT'S LARGEST FACE	UNIT HEIGHT	UNIT WIDTH	ALLOWABLE INSTALLATION ROOF HEIGHT TIE-DOWN CONFIGURATION TYPE C1	C2	C3	C4
6 ft²	29 in	15 in	≤ 100 FT	≤ 200 FT	≤ 140 FT	≤ 200 FT
9 ft²	36 in	27 in	≤ 80 FT	≤ 200 FT	≤ 100 FT	≤ 200 FT
4 ft²	48 in	36 in	≤ 200 FT	≤ 200 FT	≤ 200 FT	≤ 200 FT
6 ft²	48 in	36 in	≤ 200 FT	≤ 200 FT	≤ 200 FT	≤ 200 FT
9 ft²	48 in	36 in	≤ 80 FT	≤ 200 FT	≤ 120 FT	≤ 200 FT
12 ft²	48 in	36 in	H ≤ 30 FT	≤ 200 FT	H ≤ 40 FT	≤ 200 FT
16 ft²	48 in	36 in	AT GRADE	≤ 200 FT	H ≤ 15 FT	≤ 200 FT
20 ft²	60 in	48 in	AT GRADE	≤ 160 FT	AT GRADE	≤ 200 FT
25 ft²	60 in	48 in	N/A	H ≤ 60 FT	AT GRADE	≤ 100 FT
30 ft²	60 in	48 in	N/A	H ≤ 30 FT	N/A	H ≤ 40 FT
36 ft²	60 in	48 in	N/A	H ≤ 15 FT	N/A	H ≤ 15 FT

TABLE 6 PERMISSIBLE INSTALLATION HEIGHTS: Vult=140 MPH, EXPOSURE C

(FOR USE WITH A RISK CATEGORY II STRUCTURE***)
RISK CATEGORY II IS PER ASCE 7-16

MAXIMUM SURFACE AREA OF UNIT'S LARGEST FACE	UNIT HEIGHT	UNIT WIDTH	ALLOWABLE INSTALLATION ROOF HEIGHT TIE-DOWN CONFIGURATION TYPE C1	C2	C3	C4
6 ft²	29 in	15 in	H ≤ 30 FT	≤ 200 FT	H ≤ 40 FT	≤ 200 FT
9 ft²	36 in	27 in	H ≤ 15 FT	≤ 200 FT	H ≤ 30 FT	≤ 200 FT
4 ft²	48 in	36 in	≤ 200 FT	≤ 200 FT	≤ 200 FT	≤ 200 FT
6 ft²	48 in	36 in	≤ 200 FT	≤ 200 FT	≤ 200 FT	≤ 200 FT
9 ft²	48 in	36 in	H ≤ 15 FT	≤ 200 FT	H ≤ 40 FT	≤ 200 FT
12 ft²	48 in	36 in	AT GRADE	≤ 200 FT	AT GRADE	≤ 200 FT
16 ft²	48 in	36 in	N/A	≤ 140 FT	AT GRADE	≤ 200 FT
20 ft²	60 in	48 in	N/A	H ≤ 40 FT	N/A	≤ 80 FT
25 ft²	60 in	48 in	N/A	H ≤ 15 FT	N/A	H ≤ 30 FT
30 ft²	60 in	48 in	N/A	AT GRADE	N/A	AT GRADE
36 ft²	60 in	48 in	N/A	AT GRADE	N/A	AT GRADE

TABLE 7 PERMISSIBLE INSTALLATION HEIGHTS: Vult=140 MPH, EXPOSURE D

(FOR USE WITH A RISK CATEGORY II STRUCTURE***)
RISK CATEGORY II IS PER ASCE 7-16

MAXIMUM SURFACE AREA OF UNIT'S LARGEST FACE	UNIT HEIGHT	UNIT WIDTH	ALLOWABLE INSTALLATION ROOF HEIGHT TIE-DOWN CONFIGURATION TYPE C1	C2	C3	C4
6 ft²	29 in	15 in	AT GRADE	≤ 200 FT	H ≤ 15 FT	≤ 200 FT
9 ft²	36 in	27 in	AT GRADE	≤ 200 FT	AT GRADE	≤ 200 FT
4 ft²	48 in	36 in	≤ 200 FT	≤ 200 FT	≤ 200 FT	≤ 200 FT
6 ft²	48 in	36 in	≤ 100 FT	≤ 200 FT	≤ 180 FT	≤ 200 FT
9 ft²	48 in	36 in	AT GRADE	≤ 200 FT	H ≤ 15 FT	≤ 200 FT
12 ft²	48 in	36 in	AT GRADE	≤ 200 FT	AT GRADE	≤ 200 FT
16 ft²	48 in	36 in	N/A	≤ 80 FT	N/A	≤ 120 FT
20 ft²	60 in	48 in	N/A	H ≤ 15 FT	N/A	H ≤ 40 FT
25 ft²	60 in	48 in	N/A	AT GRADE	N/A	AT GRADE
30 ft²	60 in	48 in	N/A	AT GRADE	N/A	AT GRADE
36 ft²	60 in	48 in	N/A	N/A	N/A	AT GRADE

***AS AN EXAMPLE, THESE TABLES ARE PERMISSIBLE TO BE USED WITHIN BREVARD COUNTY. CHECK WITH LOCAL AUTHORITY HAVING JURISDICTION FOR THE APPLICABILITY OF THIS TABLE WITHIN CERTAIN FLORIDA COUNTIES.

STEEL TIE-DOWN CLIP

ENGINEERING EXPRESS®
POSTAL ADDRESS:
401 W. ATLANTIC AVE R10 BOX 219
DELRAY BEACH, FL 33444
ENGINEERINGEXPRESS.COM

MIAMI TECH, INC
361 NW, 74TH ST
MIAMI, FL 33147
(305) 693 - 7054

MIAMI TECH TIE DOWN CLIP
FL STATEWIDE APPROVAL
FLORIDA BUILDING CODE

REMARKS	DRWN	CHKD	DATE
INIT ISSUE	LAO	TSB	2/05/16
2017 FBC	LAO	FLB	8/14/17
2020 FBC	CCB	RWN	6/09/20
2021 FORMATTING	CCH	RWN	11/19/21
2023 FBC	RN	RN	8-15-23

COPYRIGHT ENGINEERING EXPRESS®

23-61594

SCALE: NTS UNLESS NOTED

8/18/2023 5:26 PM RICKN c:\users\rickn\engineering express\production - documents\projects\23-\23-61594 multiple products 2023 fbc update fl19731\2023 fbc\work\drawings & cad\23-61594b-fl19731.2-doc.dwg

PRECISION ALUMINUM PRODUCTS, INC.

ALUMINUM A/C STAND

VALID FOR USE OUTSIDE THE HVHZ ONLY (SEE LIMITATIONS HEREIN)

NON-SITE-SPECIFIC STRUCTURAL PERFORMANCE EVALUATION. A DESIGN PROFESSIONAL SHALL BE RESPONSIBLE FOR CERTIFYING THE APPLICATION OF THIS INFORMATION TO ANY SITE-SPECIFIC LOCATION.

FRANK BENNARDO, P.E.
PE# 0046549 CA# 9885

FRANK L. BENNARDO LICENSE No PE0046549 STATE OF FLORIDA PROFESSIONAL ENGINEER

DECEMBER 21, 2023

Digitally signed by Frank Bennardo
Date: 2023.12.28 10:45:07 -05'00'

FL 16921.1

DESIGN NOTES:

DESIGN PRESSURES CALCULATED FOR USE WITH THIS SYSTEM SHALL BE DETERMINED SEPARATELY ON A JOB-SPECIFIC BASIS IN ACCORDANCE WITH THE GOVERNING CODE USING ASD METHODOLOGY. SITE-SPECIFIC PRESSURE REQUIREMENTS AS DETERMINED IN ACCORDANCE WITH ASCE 7 AND CHAPTER 16 OF THE FLORIDA BUILDING CODE EIGHTH EDITION (2023) SHALL BE LESS THAN OR EQUAL TO THE LATERAL AND UPLIFT DESIGN PRESSURE CAPACITY VALUES LISTED HEREIN FOR ANY ASSEMBLY AS SHOWN.

MAXIMUM ALLOWABLE DESIGN PRESSURES (ASD):

AS NOTED IN DESIGN SCHEDULES

NOTE REGARDING USE OF THIS DOCUMENT & USE OUTSIDE FLORIDA:

NON-SITE-SPECIFIC STRUCTURAL PERFORMANCE EVALUATION. THIS PRODUCT EVALUATION IS VALID FOR USE IN **FLORIDA ONLY**. USE OF THIS EVALUATION REQUIRES A REVIEW & CERTIFICATION BY A LOCAL DESIGN PROFESSIONAL WHO SHALL BE RESPONSIBLE FOR THE PROPER ADAPTATION OF THIS GENERAL PERFORMANCE EVALUATION TO ANY SITE-SPECIFIC PROJECT. CONTACT THIS OFFICE AT **ENGINEERINGEXPRESS.COM/QUOTE** FOR ASSISTANCE WITH YOUR PROJECT-SPECIFIC NEEDS & FOR ADAPTATION & CERTIFICATION OF THIS DOCUMENT OUTSIDE OF FLORIDA.

GENERAL NOTES

1. THIS SYSTEM HAS BEEN DESIGNED AND SHALL BE FABRICATED IN ACCORDANCE WITH THE STRUCTURAL PROVISIONS OF THE FLORIDA BUILDING CODE EIGHTH EDITION (2023) FOR USE WITHIN AND OUTSIDE OF THE HIGH VELOCITY HURRICANE ZONE.

2. PRESSURE VALUES ON THIS APPROVAL ARE (ASD) ALLOWABLE DESIGN PRESSURES.

3. CONTRACTOR SHALL ENSURE THAT EACH INSTALLATION ASSEMBLY MEET THE MINIMUM CLEARANCE HEIGHT PER FBC SECTION 1510.10 FOR NON-HVHZ APPLICATIONS AND SECTION 1522.2 FOR HVHZ APPLICATIONS.

4. SEISMIC DESIGN DOES NOT GOVERN. SEISMIC PARAMETERS CHECKED: RISK CATEGORY II, IMPORTANCE FACTOR 1.0, Ss=0.057, S1=0.022, SITE CLASS D, Sds=0.061, Sd1=0.0355, SEISMIC DESIGN CATEGORY D, SEISMIC DEMANDS ON NON-STRUCTURAL COMPONENTS (MECHANICAL COMPONENTS, AC UNITS), FpMAX = 46 LBS, Ap=2.5, Rp=6.0, UP TO 200' MRH.

5. MAXIMUM DIMENSIONS AND WEIGHT OF A/C UNIT SHALL CONFORM TO SPECIFICATIONS STATED HEREIN, MINIMUM 75LB OR MAXIMUM AS LISTED HEREIN.

6. THE ARCHITECT/ENGINEER OF RECORD FOR THE PROJECT SUPERSTRUCTURE WITH WHICH THIS DESIGN IS USED SHALL BE RESPONSIBLE FOR THE INTEGRITY OF ALL SUPPORTING SURFACES TO THIS DESIGN WHICH SHALL BE COORDINATED BY THE PERMITTING CONTRACTOR. WOOD BUCKS (BY OTHERS) SHALL BE ANCHORED PROPERLY TO TRANSFER LOADS TO EXISTING STRUCTURE.

7. REACTION FORCES LISTED FOR USE WITH HOST STRUCTURE VERIFICATION ARE CALCULATED USING ASD METHODOLOGY. DESIGN PROFESSIONAL OF RECORD TO VERIFY APPLICABILITY AND/OR ADDITIONAL FACTORS FOR USE WITH HOST STRUCTURE VERIFICATION.

8. ALL FASTENERS TO BE #14 OR GREATER SAE GRADE 5, UNLESS NOTED OTHERWISE, CADMIUM PLATED OR OTHERWISE CORROSION RESISTANT MATERIAL AND SHALL COMPLY WITH ANY APPLICABLE FEDERAL,STATE, AND LOCAL CODES. PROVIDE (5) PITCHES MIN PAST THREAD PLANE, 3X THE FASTENER DIAMETER MIN. SPACING & 2X THE FASTENER DIAMETER MIN. EDGE DISTANCE TO ANY ALUMINUM EDGE, U.N.O.. FASTENERS SHALL BE CADMIUM-PLATED OR OTHERWISE CORROSION-RESISTANT MATERIAL AND SHALL COMPLY WITH "SPECIFICATIONS FOR ALUMINUM STRUCTURES" SECTION J.3.7.2 BY THE ALUMINUM ASSOCIATION IN.C, AND ANY APPLICABLE FEDERAL, STATE AND OR LOCAL CODES.

9. REFER TO FASTENER MANUFACTURER'S PUBLISHED DATA SHEETS AND RECOMMENDATIONS FOR FASTENER INSTALLATION INSTRUCTIONS.

GENERAL NOTES (CONTINUED):

10. ALL EXTRUDED MEMBERS SHALL BE ALUMINUM ALLOY TYPE 6061-T6 OR 6005-T5.

11. ALL EXISTING CONCRETE SUBSTRATE SHALL HAVE MINIMUM f'c COMPRESSIVE STRENGTH OF 3000 PSI AS VERIFIED BY OTHERS.

12. ALUMINUM WELDING SHALL BE PERFORMED IN ACCORDANCE WITH FBC SECTION 2003.8.1.4 WITH WELD FILLER ALLOYS MEETING ANSI/AWS A5.10 STANDARDS TO ACHIEVE ULTIMATE DESIGN STRENGTH IN ACCORDANCE WITH THE ALUMINUM DESIGN MANUAL, TABLE A.3.6 WELD FILLER: 5383 ELECTRODES. ALL ALUMINUM CONSTRUCTION SHALL BE IN CONFORMANCE WITH THE TOLERANCES, QUALITY AND METHODS OF CONSTRUCTION AS SET FORTH IN FBC SECTION 2003.2 AND THE AMERICAN WELDING SOCIETY'S STRUCTURAL WELDING CODE-ALUMINUM. MINIMUM WELD IS 1/8" THROAT FULL PERIMETER FILLET WELD UNLESS OTHERWISE NOTED.

13. THE CONTRACTOR IS RESPONSIBLE TO INSULATE MEMBERS FROM DISSIMILAR MATERIALS TO PREVENT ELECTROLYSIS.

14. ELECTRICAL GROUND, WHEN REQUIRED, TO BE DESIGNED & INSTALLED BY OTHERS. ALL MECHANICAL SPECIFICATIONS (CLEAR SPACE, TONNAGE, ETC.) SHALL BE AS PER MANUFACTURER RECOMMENDATIONS AND ARE THE EXPRESS RESPONSIBILITY OF THE CONTRACTOR.

15. ENGINEER SEAL AFFIXED HERETO VALIDATES STRUCTURAL DESIGN AS SHOWN ONLY. USE OF THIS SPECIFICATION BY CONTRACTOR, et. al. INDEMNIFIES & SAVES HARMLESS THIS ENGINEER FOR ALL COST & DAMAGES INCLUDING LEGAL FEES & APPELLATE FEES RESULTING FROM MATERIAL FABRICATION, SYSTEM ERECTION, CONSTRUCTION PRACTICES BEYOND THAT WHICH IS CALLED FOR BY LOCAL, STATE, & FEDERAL CODES & FROM DEVIATIONS OF THIS PLAN.

16. THE SYSTEM DETAILED HEREIN IS GENERIC AND DOES NOT PROVIDE INFORMATION FOR A SPECIFIC SITE. FOR SITE CONDITIONS DIFFERENT FROM THE CONDITIONS DETAILED HEREIN, A LICENSED ENGINEER OR REGISTERED ARCHITECT SHALL PREPARE SITE SPECIFIC DOCUMENTS FOR USE IN CONJUNCTION WITH THIS DOCUMENT.

17. ALTERATIONS ADDITIONS OR OTHER MARKINGS TO THIS DOCUMENT ARE NOT PERMITTED AND INVALIDATE THIS CERTIFICATION.

18. EXCEPT AS EXPRESSLY PROVIDED HEREIN, NO ADDITIONAL CERTIFICATIONS OR AFFIRMATIONS ARE INTENDED.

19. AC STANDS SHALL BE LABELED CONTAINING:

PRECISION ALUMINUM PRODUCTS, INC.
DEERFIELD BEACH, FL
FLORIDA PRODUCT APPROVAL NUMBER

PAGE INDEX:

SHEET INDEX

# SHEET	DESCRIPTION
1	COVER SHEET
2	ASSEMBLY ELEVATIONS & PARTS
3	STAND COMPONENTS & CALCULATION DIRECTIVE
4-7	"STD" STAND DESIGN SCHEDULE
8-11	"HD" STAND DESIGN SCHEDULE
11-14	"XHD" STAND DESIGN SCHEDULE
14-16	"FIXED HD" STAND DESIG SCHEDULE
16	"XHD" CUSTOM BRACE STAND DESIGN SCHEDULE
17-18	FRAME ASSEMBLY & UNIT TIE-DOWN DETAILS

TERMINOLOGY:

THE FOLLOWING ABBREVIATIONS APPEAR IN THIS APPROVAL: "ER" FOR "END RETENTION", "NER" FOR "NON-END RETENTION", "INC." FOR "INCORPORATION", "CORP." FOR "CORPORATION", "ALUM" FOR "ALUMINUM, "ASD" FOR "ALLOWABLE STRESS DESIGN", "ASTM" FOR "AMERICAN SOCIETY FOR TESTING AND MATERIALS", "CS" FOR "CARBON STEEL","CONN" FOR "CONNECTION", "EMBED" FOR "EMBEDMENT", "DIST." FOR "DISTANCE", "GA" FOR "GAUGE", "HVHZ" FOR "HIGH-VELOCITY HURRICANE ZONE", "LB" FOR "POUND", "MAX" FOR "MAXIMUM, "N.T.S." FOR "NOT TO SCALE", "PSF" FOR "POUNDS PER SQUARE FOOT (lb/ft²)", "SPECS" FOR "SPECIFICATIONS", "&" FOR "AND", "MAX" FOR "MAXIMUM", "W/" FOR "WITH", "EXIST" FOR "EXISTING, "STRUCT" FOR "STRUCTURE", "CONC." FOR "CONCRETE". CONTACT ENGINEERING EXPRESS FOR ADDITIONAL ABBREVIATION/TERMINOLOGY CLARIFICATIONS.

VISIT ECALC.IO/69401

FOR SITE-SPECIFIC DEVIATIONS & MORE INFORMATION ABOUT THIS DOCUMENT OR SCAN THIS QR CODE

VISIT ENGINEERINGEXPRESS.COM/STORE FOR ADDITIONAL PLANS, REPORTS & RESOURCES

ENGINEERING EXPRESS®
POSTAL ADDRESS:
2234 NORTH FEDERAL HWY #7664
BOCA RATON, FL 33431
ENGINEERINGEXPRESS.COM

PRECISION ALUMINUM PRODUCTS, INC.
1339 SW 1ST WAY
DEERFIELD BEACH, FL 33441
(954) 480-6919

ALUMINUM A/C STANDS
FLORIDA BUILDING CODE EIGHTH EDITION (2023)
FLORIDA STATEWIDE APPROVAL (FSA FL#16921.1)

REMARKS	DRWN	CHKD	DATE
PREV. SUBMITTAL [20-32768]	CSL	RWN	12/15/20
2023 FBC UPDATE & TECH. CHANGES	MRT	RWN	12/08/23

COPYRIGHT ENGINEERING EXPRESS®

23-69401

SCALE: NTS UNLESS NOTED

12/21/2023 1:55 PM MILTON c:\users\milton\engineering express\production - documents\projects\23-\23-69401 2023 product fbc update fl16921\work\2023 fbc\drawings & cad\23-69401c - fl16921.1 - cad.dwg

ALUMINUM A/C STAND

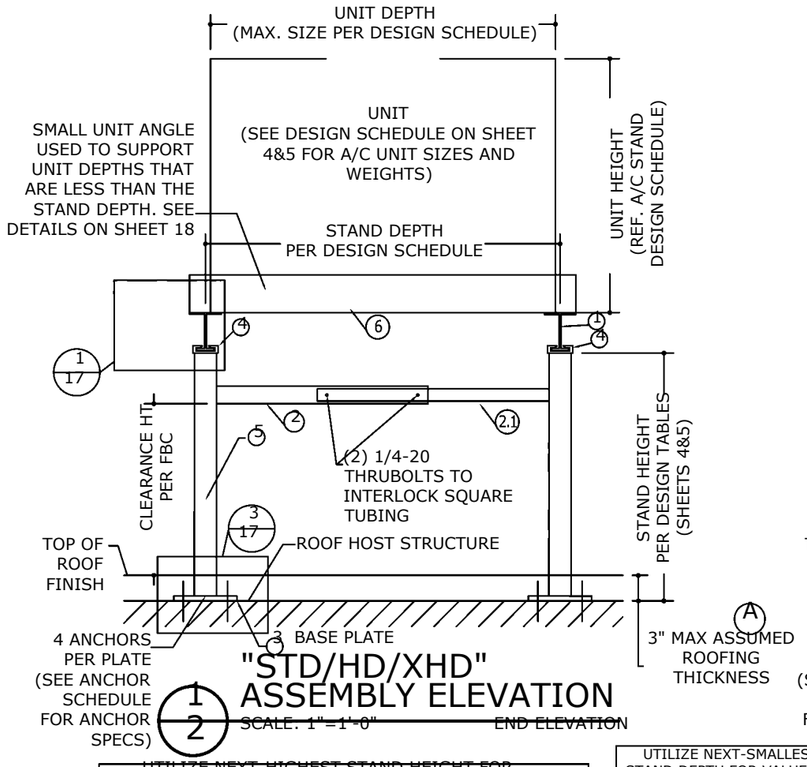

"STD/HD/XHD" ASSEMBLY ELEVATION

1/2 SCALE: 1"=1'-0" END ELEVATION

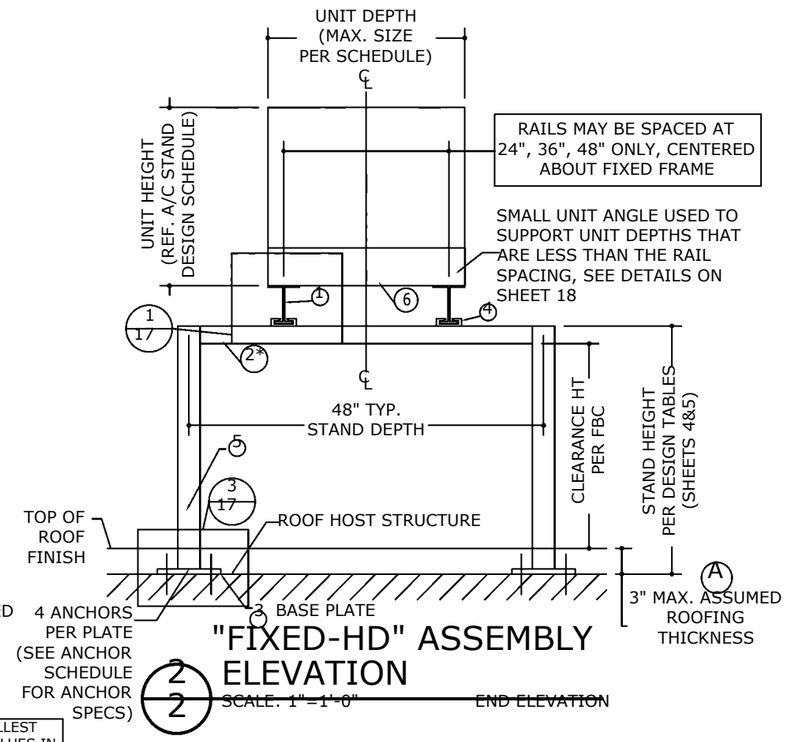

"FIXED-HD" ASSEMBLY ELEVATION

2/2 SCALE: 1"=1'-0" END ELEVATION

A UTILIZE NEXT-HIGHEST STAND HEIGHT FOR LARGER ROOF THICKNESS. FOR ROOFING WITHOUT INSULATION OMIT 3" THICKNESS AND UTILIZE CLEAR HEIGHT FROM FINISHED FLOOR. SPECIAL CONDITIONS REQUIRE SITE-SPECIFIC ENGINEERING.

UTILIZE NEXT-SMALLEST STAND DEPTH FOR VALUES IN BETWEEN EXISTING TABLES

75# MIN./450 # MAX
(800# MAX w/XHD STANDS)
UNIT WEIGHT AS VERIFIED BY OTHERS, TYP.

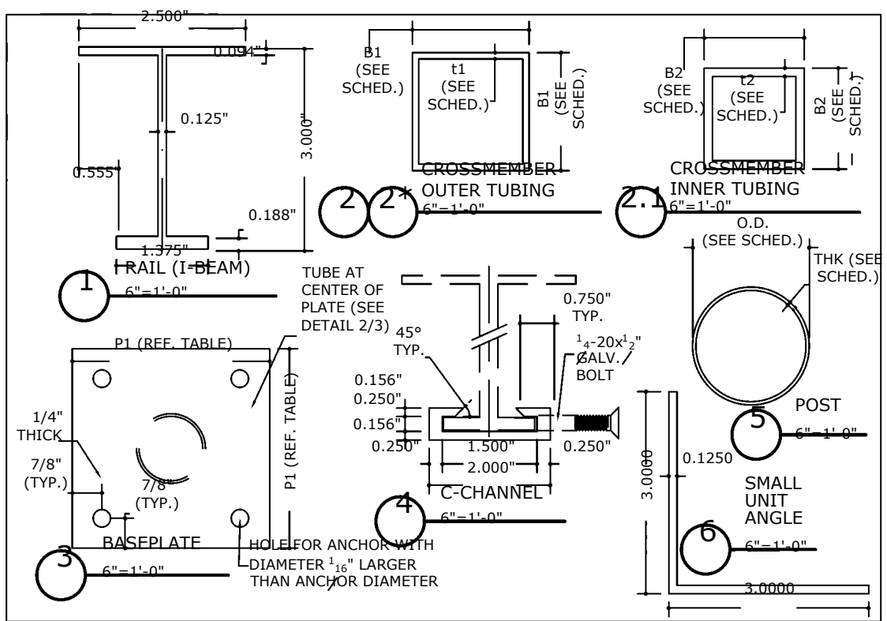

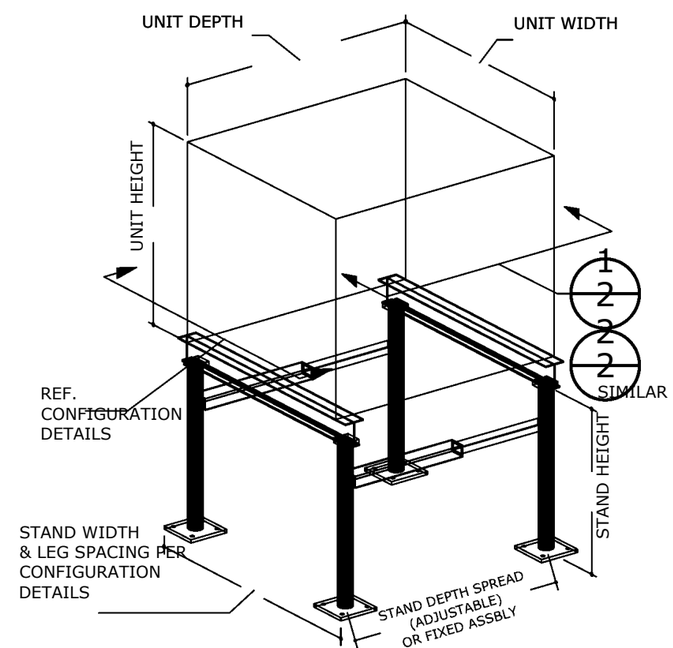

FRANK BENNARDO, P.E.
PE# 0046549 CA# 9885

FRANK L. BENNARDO LICENSE No PE0046549 STATE OF FLORIDA PROFESSIONAL ENGINEER

12/28/2023

DECEMBER 21, 2023

FL

FL 16921.1

ENGINEERING EXPRESS®
POSTAL ADDRESS:
2234 NORTH FEDERAL HWY #7664
BOCA RATON, FL 33431
ENGINEERINGEXPRESS.COM

PRECISION ALUMINUM PRODUCTS, INC.
1339 SW 1ST WAY
DEERFIELD BEACH, FL 33441
(954) 480-6919

ALUMINUM A/C STANDS
FLORIDA BUILDING CODE EIGHTH EDITION (2023)
FLORIDA STATEWIDE APPROVAL (FSA FL#16921.1)

REMARKS	DRWN	CHKD	DATE
PREV. SUBMITTAL (20-32768)	CSL	RWN	12/15/10
2023 FBC UPDATE & TECH. CHANGES	MRT	RWN	12/08/23

COPYRIGHT ENGINEERING EXPRESS®

23-69401

SCALE: NTS UNLESS NOTED

2 OF 18

12/21/2023 1:55 PM MILTON c:\users\milton\engineering express\production - documents\projects\23-\23-69401 2023 product fbc update fl16921\work\2023 fbc\drawings & cad\23-69401c - fl16921.1 - cad.dwg

FRANK BENNARDO, P.E.
PE# 0046549 CA# 9885

FRANK L. BENNARDO LICENSE No PE0046549 STATE OF FLORIDA PROFESSIONAL ENGINEER
12/28/2023

DECEMBER 21, 2023

FL

STAND COMPONENTS

STAND TYPE/COMPONENT SCHEDULE					
PART	DESCR.	STAND TYPE			
		STD	HD	XHD	FIXED-HD
2	OUTER TUBE SIZE (B1 x B1 x t1)	1.25" x 1.25" x 0.093"	1.50" x 1.50" x 0.093"	2.00" x 2.00" x 0.093"	N/A
2*	OUTER TUBE SIZE (B1 x B1 x t1)	N/A	N/A	N/A	2.00" x 2.00" x 0.093"
2.1	INNER TUBE SIZE (B2 x B2 x t2)	1.00" x 1.00" x 0.125"	1.25" x 1.25" x 0.125"	1.75" x 1.75" x 0.125"	N/A
4	POST SIZE (OD X THK)	1.5" x 0.090"	1.9" x 0.145"	1.9" x 0.200"	1.9" x 0.145"
5	BASEPLATE SIZE (P1 X P1)	4" X 4"	•4" X 4" UP TO 24" STAND HT •5" X 5" FOR 30" STAND HT	6" X 6"	5" X 5"

LEGEND:
- "HD"= HEAVY DUTY
- "STD" = STANDARD
- "XHD"= EXTRA HEAVY DUTY

2* SHALL BE UTILIZED FOR HD FIXED ASSEMBLY ONLY

MEAN UNIT HEIGHT & MAX FACE AREA CALCULATION DIRECTIVE:

THIS DIRECTIVE SHALL BE USED TO CALCULATE THE MEAN UNIT HEIGHT & MAXIMUM FACE AREA OF ANY MULTIPLE UNIT CONFIGURATION.

EXAMPLE CONFIGURATIONS:

†NOTE
- **UNIT WEIGHT MAY BE INCREASED TO 800# MAX FOR "XHD" STANDS**
- **MAX RAIL SPAN LENGTH IS LIMITED TO 5' FOR "XHD" STANDS**

2 UNITS:2 FRAME CONFIGURATION

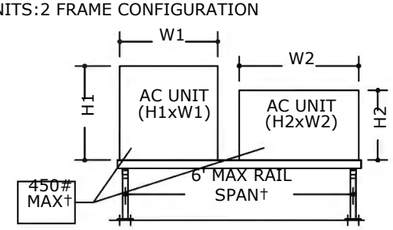

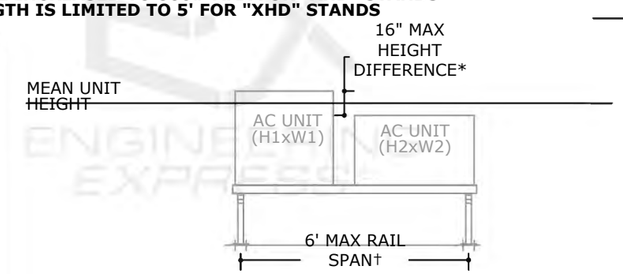

3 UNITS:3 FRAME CONFIGURATION

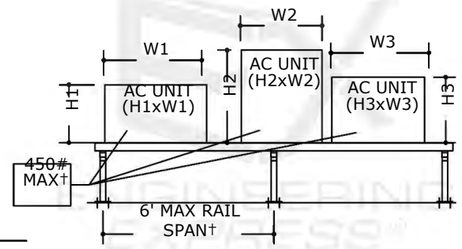

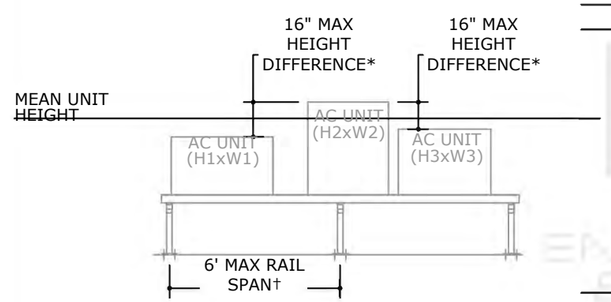

4 UNITS:4 FRAME CONFIGURATION

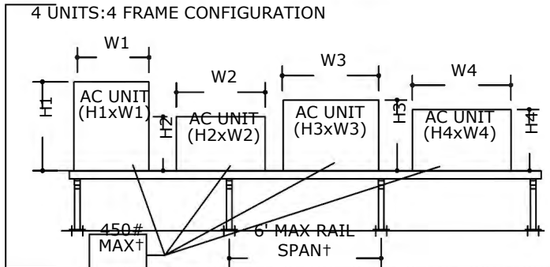

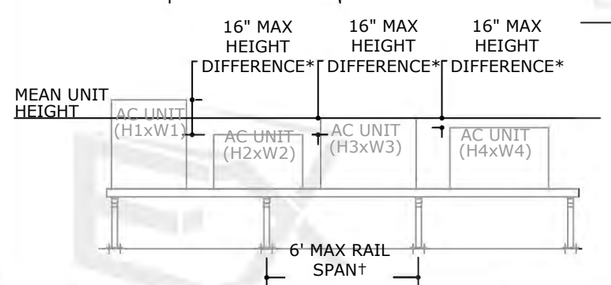

NOTE: THE NUMBER OF UNITS PER STAND CONFIGURATION MAY BE UNLIMITED PROVIDED THAT MULTIPLE UNITS CONFORM TO THE MEAN UNIT HEIGHT & MAXIMUM UNIT FACE AREA RESTRICTIONS UTILIZED IN THE DESIGN SCHEDULES.

*MAXIMUM ALLOWABLE HEIGHT DIFFERENCE BETWEEN ANY UNITS IN A MULTIPLE UNIT CONFIGURATION IS RESTRICTED TO 16" MAX.

FORMULAS USED FOR DETERMINING MEAN UNIT HEIGHT & MAXIMUM UNIT FACE AREA:

1. CALCULATE THE MEAN UNIT HEIGHT BY THE FOLLOWING EQUATION:
   - TWO UNITS: $\frac{H1+H2}{2}$
   - THREE UNITS: $\frac{H1+H2+H3}{3}$
   - FOUR UNITS: $\frac{H1+H2+H3+H4}{4}$
   - "n" UNITS: $\frac{H1+H2+H3+...Hn}{n}$
2. CALCULATE THE MAXIMUM UNIT FACE AREA BY THE FOLLOWING EQUATION:
   - TWO UNITS: (H1xW1)+(H2xW2)
   - THREE UNITS: (H1xW1)+(H2xW2)+(H3xW3)
   - FOUR UNITS: (H1xW1)+(H2xW2)+(H3xW3)+(H4xW4)
   - "n" UNITS: (H1xW1)+...(HnxWn)

EXAMPLE SCENARIO:

1. CONSIDER A FOUR UNIT CONFIGURATION WITH THE DIMENSIONS AS SHOWN BELOW.
2. CALCULATE THE MEAN UNIT HEIGHT.
   - FOUR UNITS: $\frac{H1+H2+H3+H4}{4} = \frac{20"+29"+22"+25"}{4} =$ 24" MEAN UNIT HEIGHT
3. CALCULATE THE MAXIMUM FACE AREA.
   - FOUR UNITS: (H1xW1)+(H2xW2)+(H3xW3)+(H4xW4) = (20"x21")+(29"x25")+(22"x22")+(25"x27")

= 2304 in²

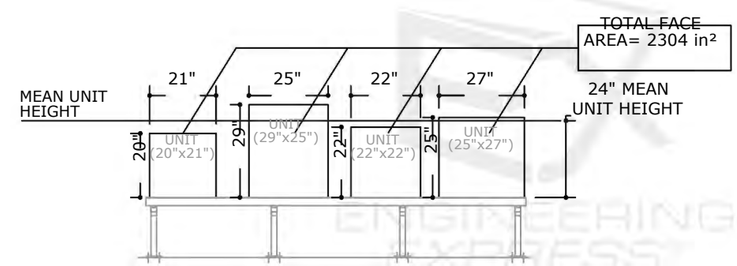

FL 16921.1

ENGINEERING EXPRESS®
POSTAL ADDRESS:
2234 NORTH FEDERAL HWY #7664
BOCA RATON, FL 33431
ENGINEERINGEXPRESS.COM

PRECISION ALUMINUM PRODUCTS, INC.
1339 SW 1ST WAY
DEERFIELD BEACH, FL 33441
(954) 480-6919

ALUMINUM A/C STANDS
FLORIDA BUILDING CODE EIGHTH EDITION (2023)
FLORIDA STATEWIDE APPROVAL (FSA FL#16921.1)

REMARKS	DRWN	CHKD	DATE
PREV. SUBMITTAL (20-32768)	CSL	RWN	12/15/20
2023 FBC UPDATE & TECH. CHANGES	MRT	RWN	12/08/23

COPYRIGHT ENGINEERING EXPRESS®

23-69401

SCALE: NTS UNLESS NOTED

12/21/2023 1:55 PM MILTON c:\users\milton\engineering express\production - documents\projects\23-69401 2023 fbc\drawings & cad\23-69401c - fl16921.1 - cad.dwg

"STD" STAND DESIGN SCHEDULES & STAND DIRECTIVE EXAMPLE

DESIGN SCHEDULES NOTES:

1. DESIGN SCHEDULES SHOWN HEREIN ARE REFERENCED TO ALLOWABLE STRENGTH DESIGN (ASD) METHODOLOGY.
2. EMPTY CELLS DENOTES CONDITIONS NOT ALLOWED TO USE.
3. MAXIMUM CALCULATED FACE AREA SHALL BE EQUAL TO OR LESS THAN THE MAXIMUM ALLOWABLE FACE AREA FOR EACH CONFIGURATION.
4. REFERENCE ANCHOR SCHEDULE FOR ANCHOR TYPES LISTED HEREIN.

FRANK BENNARDO, P.E.
PE# 0046549 CA# 9885

FRANK L. BENNARDO LICENSE No PE0046549 STATE OF FLORIDA PROFESSIONAL ENGINEER

12/28/2023

DECEMBER 21, 2023

FL

24" STAND DEPTH: MAX FACE AREA (2760in² - 11520in²), FRAME QUANTITY (5-8 FRAMES)

STAND CLEAR HEIGHT	MAX MEAN UNIT HEIGHT	MAX FACE AREA	UNIT TO FRAME RATIO																LOAD TRANSFER INFORMATION FOR USE WITH HOST STRUCTURE VERIFICATION ONLY			
			MAX FACE AREA : 8 FRAMES				MAX FACE AREA : 7 FRAMES				MAX FACE AREA : 6 FRAMES				MAX FACE AREA : 5 FRAMES							
			ANCHOR TYPE: 1 OR 4		ANCHORS TYPE: 2 OR 3		ANCHOR TYPE: 1 OR 4		ANCHORS TYPE: 2 OR 3		ANCHOR TYPE: 1 OR 4		ANCHORS TYPE: 2 OR 3		ANCHOR TYPE: 1 OR 4		ANCHORS TYPE: 2 OR 3					
			MAX ALLOWABLE LATERAL LOAD	MAX ALLOWABLE UPLIFT	MAX ALLOWABLE LATERAL LOAD	MAX ALLOWABLE UPLIFT	MAX ALLOWABLE LATERAL LOAD	MAX ALLOWABLE UPLIFT	MAX ALLOWABLE LATERAL LOAD	MAX ALLOWABLE UPLIFT	MAX ALLOWABLE LATERAL LOAD	MAX ALLOWABLE UPLIFT	MAX ALLOWABLE LATERAL LOAD	MAX ALLOWABLE UPLIFT	MAX ALLOWABLE LATERAL LOAD	MAX ALLOWABLE UPLIFT	MAX ALLOWABLE LATERAL LOAD	MAX ALLOWABLE UPLIFT	MAX. BASE MOMENT (M)	MAX. BASE SHEAR (V)	MAX. BASE UPLIFT (T)	MAX. BASE GRAVITY (C)
18 "	24 "	2760 in²	87.3 PSF	68.9 PSF	87.3 PSF	68.9 PSF	76.4 PSF	60.3 PSF	76.4 PSF	60.3 PSF	65.5 PSF	51.7 PSF	65.5 PSF	51.7 PSF	54.6 PSF	43.1 PSF	54.6 PSF	43.1 PSF	100.40 LB-FT	104.6 LB	356.4 LB	373.2 LB
24 "			68.4 PSF	54.0 PSF	68.4 PSF	54.0 PSF	59.8 PSF	47.2 PSF	59.8 PSF	47.2 PSF	51.3 PSF	40.5 PSF	51.3 PSF	40.5 PSF	42.7 PSF	33.7 PSF	42.7 PSF	33.7 PSF	100.40 LB-FT	81.9 LB	317.0 LB	362.5 LB
30 "			56.4 PSF	44.5 PSF	56.4 PSF	44.5 PSF	49.3 PSF	38.9 PSF	49.3 PSF	38.9 PSF	42.3 PSF	33.4 PSF	42.3 PSF	33.4 PSF	35.2 PSF	27.8 PSF	35.2 PSF	27.8 PSF	100.40 LB-FT	67.5 LB	292.7 LB	356.4 LB
36 "			48.0 PSF	37.9 PSF	48.0 PSF	37.9 PSF	42.0 PSF	33.2 PSF	42.0 PSF	33.2 PSF	36.0 PSF	28.4 PSF	36.0 PSF	28.4 PSF	30.0 PSF	23.7 PSF	30.0 PSF	23.7 PSF	100.40 LB-FT	57.6 LB	276.2 LB	352.5 LB
18 "	30 "	4650 in²	51.8 PSF	40.9 PSF	51.8 PSF	40.9 PSF	45.3 PSF	35.8 PSF	45.3 PSF	35.8 PSF	38.8 PSF	30.7 PSF	38.8 PSF	30.7 PSF	32.4 PSF	25.5 PSF	32.4 PSF	25.5 PSF	100.40 LB-FT	104.6 LB	382.5 LB	399.4 LB
24 "			40.6 PSF	32.0 PSF	40.6 PSF	32.0 PSF	35.5 PSF	28.0 PSF	35.5 PSF	28.0 PSF	30.4 PSF	24.0 PSF	30.4 PSF	24.0 PSF	25.3 PSF	20.0 PSF	25.3 PSF	20.0 PSF	100.40 LB-FT	81.9 LB	337.5 LB	383.0 LB
30 "			33.4 PSF	26.4 PSF	33.4 PSF	26.4 PSF	29.3 PSF	23.1 PSF	29.3 PSF	23.1 PSF	25.1 PSF	19.8 PSF	25.1 PSF	19.8 PSF	20.9 PSF	16.5 PSF	20.9 PSF	16.5 PSF	100.40 LB-FT	67.5 LB	309.6 LB	373.3 LB
36 "			28.5 PSF	22.5 PSF	28.5 PSF	22.5 PSF	24.9 PSF	19.7 PSF	24.9 PSF	19.7 PSF	21.4 PSF	16.9 PSF	21.4 PSF	16.9 PSF					100.40 LB-FT	57.6 LB	290.6 LB	344.4 LB
18 "	36 "	6300 in²	38.2 PSF	30.2 PSF	38.2 PSF	30.2 PSF	33.4 PSF	26.4 PSF	33.4 PSF	26.4 PSF	28.7 PSF	22.6 PSF	28.7 PSF	22.6 PSF	23.9 PSF	18.8 PSF	23.9 PSF	18.8 PSF	100.40 LB-FT	104.6 LB	408.7 LB	425.5 LB
24 "			29.9 PSF	23.6 PSF	29.9 PSF	23.6 PSF	26.2 PSF	20.7 PSF	26.2 PSF	20.7 PSF	22.4 PSF	17.7 PSF	22.4 PSF	17.7 PSF					100.40 LB-FT	81.9 LB	358.0 LB	381.0 LB
30 "			24.7 PSF	19.5 PSF	24.7 PSF	19.5 PSF	21.6 PSF	17.0 PSF	21.6 PSF	17.0 PSF									100.40 LB-FT	67.5 LB	326.5 LB	351.6 LB
36 "			21.0 PSF	16.6 PSF	21.0 PSF	16.6 PSF													100.40 LB-FT	57.6 LB	305.0 LB	330.7 LB
18 "	42 "	8400 in²	28.7 PSF	22.6 PSF	28.7 PSF	22.6 PSF	25.1 PSF	19.8 PSF	25.1 PSF	19.8 PSF	21.5 PSF	16.9 PSF	21.5 PSF	16.9 PSF					100.40 LB-FT	104.6 LB	434.9 LB	429.2 LB
24 "			22.4 PSF	17.7 PSF	22.4 PSF	17.7 PSF													100.40 LB-FT	81.9 LB	378.5 LB	373.4 LB
30 "																						
36 "																						
18 "	48 "	11520 in²	20.9 PSF	16.5 PSF	20.9 PSF	16.5 PSF													100.40 LB-FT	104.6 LB	461.0 LB	427.3 LB
24 "																						
30 "																						
36 "																						

DESIGN SCHEDULE NOTES:

1. MAXIMUM CALCULATED FACE AREA SHALL BE EQUAL TO OR LESS THAN THE MAXIMUM ALLOWABLE FACE AREA FOR EACH CONFIGURATION.
2. REFERENCE ANCHOR SCHEDULE FOR ANCHOR TYPES LISTED HEREIN.

STAND EXAMPLE

(THE FOLLOWING EXAMPLE ILLUSTRATES THE PROCEDURE USED TO DETERMINE THE MAXIMUM ALLOWABLE WIND PRESSURE & UPLIFT FOR ANY GIVEN MECHANICAL UNIT CONFIGURATION THAT CONFORMS TO THE DIMENSION RESTRICTIONS LISTED HEREIN. SEE SHEET 3 FOR MEAN UNIT HEIGHT & MAXIMUM FACE AREA CALCULATION DIRECTIVE. SEE SHEET 3 FOR COMPONENT SCHEDULE. SEE SHEET 17 FOR ANCHOR SCHEDULES.)

MECHANICAL UNIT/STAND CRITERIA:

CONSIDER THE INSTALLATION OF (4) MECHANICAL UNITS, (1)-20" TALL x 24" DEEP x 21" WIDE, (1)-29" TALL x 24" DEEP x 25" WIDE,(1)-22" TALL x 24" DEEP x 22" WIDE, (1)-25" TALL x 27" DEEP x 27" WIDE,[350 LB MAX WEIGHT] INSTALLED WITH THE FOLLOWING CRITERIA:

- NUMBER OF LEG FRAMES= (5) FRAMES
- STAND HEIGHT= 18" HEIGHT
- STAND DEPTH= 24" STAND DEPTH SPREAD
- HOST STRUCTURE TYPE= 3,000 PSI CONCRETE (AS VERIFIED BY OTHERS).

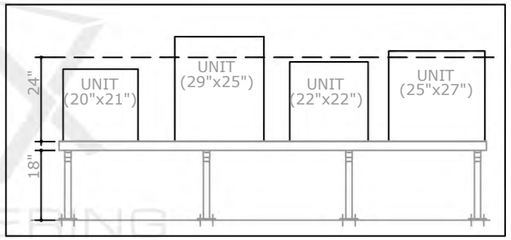

	PROCEDURE:	*RESULT:*
1	DETERMINE THE MEAN UNIT HEIGHT FOR THE GIVEN CONFIGURATION	SEE SHEET 3, CALCULATION DIRECTIVE STEP #1 FOR METHOD OF CALCULATING THE MEAN UNIT HEIGHT. FOR CLARIFICATION, THIS CONFIGURATION HAS BEEN WORKED OUT IN THE EXAMPLE SCENARIO. **(MEAN UNIT HEIGHT = 24 in)**
2	DETERMINE THE MAXIMUM FACE AREA FOR THE GIVEN CONFIGURATION	SEE SHEET 3, CALCULATION DIRECTIVE STEP #2 FOR METHOD OF CALCULATING THE MAXIMUM TOTAL UNIT FACE AREA. FOR CLARIFICATION, THIS CONFIGURATION HAS BEEN WORKED OUT IN THE EXAMPLE SCENARIO. **(MAXIMUM UNIT FACE AREA = 2304 in²)**
3	LOCATE DESIGN SCHEDULE THAT APPLIES TO THE GIVEN CONFIGURATION	SEE SHEET 4 FOR THE 24" STAND DEPTH WITH A MAXIMUM FACE AREA OF 2304 in².
4	DETERMINE THE MAXIMUM ALLOWABLE LATERAL & UPLIFT WIND LOADS	FOR A 2304 in² MAX TOTAL UNIT FACE AREA ON A 18" STAND HEIGHT WITH (5) SUPPORTING FRAMES, THE ALLOWABLE WIND LOADS ARE AS FOLLOWS: • ALLOWABLE LATERAL WIND LOAD: **54.6 PSF** • ALLOWABLE UPLIFT WIND LOAD: **43.1 PSF** (FROM TABLE ABOVE)
5	INSTALL STAND PER PERMISSIBLE ANCHOR TYPES AND VERIFY HOST STRUCTURE TYPE	UTILIZE ANCHOR TYPES FROM DESIGN SCHEDULE ASSOCIATED WITH THE ALLOWABLE WIND VALUES DETERMINED IN STEP 4. FOR THE TABLE LISTING, **ANCHOR TYPES 2 & 3 MAY BE APPLIED**. FOR THIS EXAMPLE UTILIZE ANCHOR TYPE 2 FOR CONCRETE HOST STRUCTURE TYPE. INSTALL STANDS PER ANCHOR SCHEDULE AND DETAILS AS ILLUSTRATED ON SHEETS 17 & 18.

CONCLUSION:

6	MAXIMUM ALLOWABLE LATERAL DESIGN PRESSURE=	= 54.6 PSF (FROM TABLE ABOVE)
	MAXIMUM ALLOWABLE UPLIFT DESIGN PRESSURE=	= 43.1 PSF
7	COMPARE TO SITE SPECIFIC DESIGN CONDITIONS	*COMPARE VALUES FROM STEP #6 TO THE SEPARATE SITE SPECIFIC REQUIRED DESIGN WIND PRESSURE PROVIDED BY A LICENSED ENGINEER OR REGISTERED ARCHITECT; NOT INCLUDED IN THIS CERTIFICATION. SITE-SPECIFIC PRESSURE REQUIREMENTS SHALL BE LESS THAN OR EQUAL TO THE LATERAL AND UPLIFT DESIGN PRESSURE ALLOWABLE CAPACITY VALUES LISTED.*

DESIGN SCHEDULE NOTES:

1. MAXIMUM CALCULATED FACE AREA SHALL BE EQUAL TO OR LESS THAN THE MAXIMUM ALLOWABLE FACE AREA FOR EACH CONFIGURATION.
2. REFERENCE ANCHOR SCHEDULE FOR ANCHOR TYPES LISTED HEREIN.

TABLE LEGEND:

DENOTES EXAMPLE VALUE FOR USE WITH COVER PAGE DIRECTIVE

FL 16921.1

ENGINEERING EXPRESS®
POSTAL ADDRESS:
2234 NORTH FEDERAL HWY #7664
BOCA RATON, FL 33431
ENGINEERINGEXPRESS.COM

PRECISION ALUMINUM PRODUCTS, INC.
1339 SW 1ST WAY
DEERFIELD BEACH, FL 33441
(954) 480-6919

ALUMINUM A/C STANDS
FLORIDA BUILDING CODE EIGHTH EDITION (2023)
FLORIDA STATEWIDE APPROVAL (FSA FL#16921.1)

REMARKS	DRWN	CHKD	DATE
PREV. SUBMITTAL (20-32768)	CSL	RWN	12/15/20
2023 FBC UPDATE & TECH. CHANGES	MRT	RWN	12/08/23

COPYRIGHT ENGINEERING EXPRESS®

23-69401

SCALE: NTS UNLESS NOTED

12/21/2023 1:55 PM MILTON c:\users\milton\engineering express\production - documents\projects\23-\23-69401 2023 product fbc update fl16921\work\2023 fbc\drawings & cad\23-69401c - fl16921.1 - cad.dwg

"STD" STAND DESIGN SCHEDULE CONTINUED

DESIGN SCHEDULES NOTES:

1. DESIGN SCHEDULES SHOWN HEREIN ARE REFERENCED TO ALLOWABLE STRENGTH DESIGN (ASD) METHODOLOGY.
2. EMPTY CELLS DENOTES CONDITIONS NOT ALLOWED TO USE.
3. MAXIMUM CALCULATED FACE AREA SHALL BE EQUAL TO OR LESS THAN THE MAXIMUM ALLOWABLE FACE AREA FOR EACH CONFIGURATION.
4. REFERENCE ANCHOR SCHEDULE FOR ANCHOR TYPES LISTED HEREIN.

FRANK BENNARDO, P.E.
PE# 0046549 CA# 9885

FRANK L. BENNARDO LICENSE No PE0046549 STATE OF FLORIDA PROFESSIONAL ENGINEER

12/28/2023

DECEMBER 21, 2023

FL

36" STAND DEPTH: MAX FACE AREA (2760in² - 11520in²), FRAME QUANTITY (5-8 FRAMES)

UNIT TO FRAME RATIO

STAND CLEAR HEIGHT	MAX MEAN UNIT HEIGHT	MAX FACE AREA	MAX FACE AREA : 8 FRAMES				MAX FACE AREA : 7 FRAMES				MAX FACE AREA : 6 FRAMES				MAX FACE AREA : 5 FRAMES				LOAD TRANSFER INFORMATION FOR USE WITH HOST STRUCTURE VERIFICATION ONLY			
			ANCHOR TYPE: 1 OR 4		ANCHORS TYPE: 2 OR 3		ANCHOR TYPE: 1 OR 4		ANCHORS TYPE: 2 OR 3		ANCHOR TYPE: 1 OR 4		ANCHORS TYPE: 2 OR 3		ANCHOR TYPE: 1 OR 4		ANCHORS TYPE: 2 OR 3		MAX. BASE MOMENT (M)	MAX. BASE SHEAR (V)	MAX. BASE UPLIFT (T)	MAX. BASE GRAVITY (C)
			MAX ALLOWABLE LATERAL LOAD	MAX ALLOWABLE UPLIFT	MAX ALLOWABLE LATERAL LOAD	MAX ALLOWABLE UPLIFT	MAX ALLOWABLE LATERAL LOAD	MAX ALLOWABLE UPLIFT	MAX ALLOWABLE LATERAL LOAD	MAX ALLOWABLE UPLIFT	MAX ALLOWABLE LATERAL LOAD	MAX ALLOWABLE UPLIFT	MAX ALLOWABLE LATERAL LOAD	MAX ALLOWABLE UPLIFT	MAX ALLOWABLE LATERAL LOAD	MAX ALLOWABLE UPLIFT	MAX ALLOWABLE LATERAL LOAD	MAX ALLOWABLE UPLIFT				
18 "	24 "	2760 in²	81.7 PSF	64.5 PSF	81.7 PSF	64.5 PSF	71.5 PSF	56.4 PSF	71.5 PSF	56.4 PSF	61.3 PSF	48.3 PSF	61.3 PSF	48.3 PSF	51.0 PSF	40.3 PSF	51.0 PSF	40.3 PSF	100.40 LB-FT	97.9 LB	242.7 LB	268.1 LB
24 "			64.3 PSF	50.7 PSF	64.3 PSF	50.7 PSF	56.2 PSF	44.4 PSF	56.2 PSF	44.4 PSF	48.2 PSF	38.0 PSF	48.2 PSF	38.0 PSF	40.1 PSF	31.7 PSF	40.1 PSF	31.7 PSF	100.40 LB-FT	77.0 LB	213.6 LB	265.4 LB
30 "			53.2 PSF	42.0 PSF	53.2 PSF	42.0 PSF	46.6 PSF	36.8 PSF	46.6 PSF	36.8 PSF	39.9 PSF	31.5 PSF	39.9 PSF	31.5 PSF	33.3 PSF	26.2 PSF	33.3 PSF	26.2 PSF	100.40 LB-FT	63.8 LB	195.9 LB	264.3 LB
36 "			45.6 PSF	36.0 PSF	45.6 PSF	36.0 PSF	39.9 PSF	31.5 PSF	39.9 PSF	31.5 PSF	34.2 PSF	27.0 PSF	34.2 PSF	27.0 PSF	28.5 PSF	22.5 PSF	28.5 PSF	22.5 PSF	100.40 LB-FT	54.6 LB	183.9 LB	263.9 LB
18 "	30 "	4650 in²	48.5 PSF	38.2 PSF	48.5 PSF	38.2 PSF	42.4 PSF	33.5 PSF	42.4 PSF	33.5 PSF	36.3 PSF	28.7 PSF	36.3 PSF	28.7 PSF	30.3 PSF	23.9 PSF	30.3 PSF	23.9 PSF	100.40 LB-FT	97.9 LB	259.0 LB	284.4 LB
24 "			38.1 PSF	30.1 PSF	38.1 PSF	30.1 PSF	33.4 PSF	26.3 PSF	33.4 PSF	26.3 PSF	28.6 PSF	22.6 PSF	28.6 PSF	22.6 PSF	23.8 PSF	18.8 PSF	23.8 PSF	18.8 PSF	100.40 LB-FT	77.0 LB	226.5 LB	278.2 LB
30 "			31.6 PSF	24.9 PSF	31.6 PSF	24.9 PSF	27.6 PSF	21.8 PSF	27.6 PSF	21.8 PSF	23.7 PSF	18.7 PSF	23.7 PSF	18.7 PSF					100.40 LB-FT	63.8 LB	206.5 LB	252.4 LB
36 "			27.0 PSF	21.3 PSF	27.0 PSF	21.3 PSF	23.6 PSF	18.7 PSF	23.6 PSF	18.7 PSF	20.3 PSF	16.0 PSF	20.3 PSF	16.0 PSF					100.40 LB-FT	54.6 LB	193.0 LB	250.5 LB
18 "	36 "	6300 in²	35.8 PSF	28.2 PSF	35.8 PSF	28.2 PSF	31.3 PSF	24.7 PSF	31.3 PSF	24.7 PSF	26.8 PSF	21.2 PSF	26.8 PSF	21.2 PSF	22.3 PSF	17.6 PSF	22.3 PSF	17.6 PSF	100.40 LB-FT	97.9 LB	275.3 LB	300.7 LB
24 "			28.1 PSF	22.2 PSF	28.1 PSF	22.2 PSF	24.6 PSF	19.4 PSF	24.6 PSF	19.4 PSF	21.1 PSF	16.6 PSF	21.1 PSF	16.6 PSF					100.40 LB-FT	77.0 LB	239.3 LB	268.6 LB
30 "			23.3 PSF	18.4 PSF	23.3 PSF	18.4 PSF	20.4 PSF	16.1 PSF	20.4 PSF	16.1 PSF									100.40 LB-FT	63.8 LB	217.2 LB	247.0 LB
36 "																						
18 "	42 "	8400 in²	26.8 PSF	21.2 PSF	26.8 PSF	21.2 PSF	23.4 PSF	18.5 PSF	23.4 PSF	18.5 PSF	20.1 PSF	15.9 PSF	20.1 PSF	15.9 PSF					100.40 LB-FT	97.9 LB	291.6 LB	294.5 LB
24 "			21.1 PSF	16.6 PSF	21.1 PSF	16.6 PSF													100.40 LB-FT	77.0 LB	252.1 LB	253.3 LB
30 "																						
36 "																						
18 "	48 "	11520 in²																				
24 "																						
30 "																						
36 "																						

24" STAND DEPTH: MAX FACE AREA (2208in² - 9216in²), FRAME QUANTITY (4-7 FRAMES)

UNIT TO FRAME RATIO

STAND CLEAR HEIGHT	MAX MEAN UNIT HEIGHT	MAX FACE AREA	MAX FACE AREA : 7 FRAMES				MAX FACE AREA : 6 FRAMES				MAX FACE AREA : 5 FRAMES				MAX FACE AREA : 4 FRAMES				LOAD TRANSFER INFORMATION FOR USE WITH HOST STRUCTURE VERIFICATION ONLY			
			ANCHOR TYPE: 1 OR 4		ANCHORS TYPE: 2 OR 3		ANCHOR TYPE: 1 OR 4		ANCHORS TYPE: 2 OR 3		ANCHOR TYPE: 1 OR 4		ANCHORS TYPE: 2 OR 3		ANCHOR TYPE: 1 OR 4		ANCHORS TYPE: 2 OR 3		MAX. BASE MOMENT (M)	MAX. BASE SHEAR (V)	MAX. BASE UPLIFT (T)	MAX. BASE GRAVITY (C)
			MAX ALLOWABLE LATERAL LOAD	MAX ALLOWABLE UPLIFT	MAX ALLOWABLE LATERAL LOAD	MAX ALLOWABLE UPLIFT	MAX ALLOWABLE LATERAL LOAD	MAX ALLOWABLE UPLIFT	MAX ALLOWABLE LATERAL LOAD	MAX ALLOWABLE UPLIFT	MAX ALLOWABLE LATERAL LOAD	MAX ALLOWABLE UPLIFT	MAX ALLOWABLE LATERAL LOAD	MAX ALLOWABLE UPLIFT	MAX ALLOWABLE LATERAL LOAD	MAX ALLOWABLE UPLIFT	MAX ALLOWABLE LATERAL LOAD	MAX ALLOWABLE UPLIFT				
18 "	24 "	2208 in²	95.5 PSF	75.4 PSF	95.5 PSF	75.4 PSF	81.9 PSF	64.6 PSF	81.9 PSF	64.6 PSF	68.2 PSF	53.8 PSF	68.2 PSF	53.8 PSF	54.6 PSF	43.1 PSF	54.6 PSF	43.1 PSF	100.40 LB-FT	104.6 LB	357.6 LB	373.2 LB
24 "			74.8 PSF	59.0 PSF	74.8 PSF	59.0 PSF	64.1 PSF	50.6 PSF	64.1 PSF	50.6 PSF	53.4 PSF	42.2 PSF	53.4 PSF	42.2 PSF	42.7 PSF	33.7 PSF	42.7 PSF	33.7 PSF	100.40 LB-FT	81.9 LB	318.2 LB	362.5 LB
30 "			61.7 PSF	48.7 PSF	61.7 PSF	48.7 PSF	52.8 PSF	41.7 PSF	52.8 PSF	41.7 PSF	44.0 PSF	34.8 PSF	44.0 PSF	34.8 PSF	35.2 PSF	27.8 PSF	35.2 PSF	27.8 PSF	100.40 LB-FT	67.5 LB	293.9 LB	356.4 LB
36 "			52.5 PSF	41.5 PSF	52.5 PSF	41.5 PSF	45.0 PSF	35.5 PSF	45.0 PSF	35.5 PSF	37.5 PSF	29.6 PSF	37.5 PSF	29.6 PSF	30.0 PSF	23.7 PSF	30.0 PSF	23.7 PSF	100.40 LB-FT	57.6 LB	277.4 LB	352.5 LB
18 "	30 "	3720 in²	56.7 PSF	44.7 PSF	56.7 PSF	44.7 PSF	48.6 PSF	38.3 PSF	48.6 PSF	38.3 PSF	40.5 PSF	31.9 PSF	40.5 PSF	31.9 PSF	32.4 PSF	25.5 PSF	32.4 PSF	25.5 PSF	100.40 LB-FT	104.6 LB	383.7 LB	399.4 LB
24 "			44.4 PSF	35.0 PSF	44.4 PSF	35.0 PSF	38.0 PSF	30.0 PSF	38.0 PSF	30.0 PSF	31.7 PSF	25.0 PSF	31.7 PSF	25.0 PSF	25.3 PSF	20.0 PSF	25.3 PSF	20.0 PSF	100.40 LB-FT	81.9 LB	338.7 LB	383.0 LB
30 "			36.6 PSF	28.9 PSF	36.6 PSF	28.9 PSF	31.3 PSF	24.7 PSF	31.3 PSF	24.7 PSF	26.1 PSF	20.6 PSF	26.1 PSF	20.6 PSF	20.9 PSF	16.5 PSF	20.9 PSF	16.5 PSF	100.40 LB-FT	67.5 LB	310.8 LB	373.3 LB
36 "			31.2 PSF	24.6 PSF	31.2 PSF	24.6 PSF	26.7 PSF	21.1 PSF	26.7 PSF	21.1 PSF	22.2 PSF	17.6 PSF	22.2 PSF	17.6 PSF					100.40 LB-FT	57.6 LB	291.8 LB	339.9 LB
18 "	36 "	5040 in²	41.8 PSF	33.0 PSF	41.8 PSF	33.0 PSF	35.8 PSF	28.3 PSF	35.8 PSF	28.3 PSF	29.9 PSF	23.6 PSF	29.9 PSF	23.6 PSF	23.9 PSF	18.8 PSF	23.9 PSF	18.8 PSF	100.40 LB-FT	104.6 LB	409.9 LB	425.5 LB
24 "			32.7 PSF	25.8 PSF	32.7 PSF	25.8 PSF	28.1 PSF	22.1 PSF	28.1 PSF	22.1 PSF	23.4 PSF	18.4 PSF	23.4 PSF	18.4 PSF					100.40 LB-FT	81.9 LB	359.2 LB	376.5 LB
30 "			27.0 PSF	21.3 PSF	27.0 PSF	21.3 PSF	23.1 PSF	18.2 PSF	23.1 PSF	18.2 PSF									100.40 LB-FT	67.5 LB	327.7 LB	345.2 LB
36 "			23.0 PSF	18.1 PSF	23.0 PSF	18.1 PSF													100.40 LB-FT	57.6 LB	306.2 LB	323.4 LB
18 "	42 "	6720 in²	31.4 PSF	24.7 PSF	31.4 PSF	24.7 PSF	26.9 PSF	21.2 PSF	26.9 PSF	21.2 PSF	22.4 PSF	17.7 PSF	22.4 PSF	17.7 PSF					100.40 LB-FT	104.6 LB	436.1 LB	424.7 LB
24 "			24.5 PSF	19.4 PSF	24.5 PSF	19.4 PSF	21.0 PSF	16.6 PSF	21.0 PSF	16.6 PSF									100.40 LB-FT	81.9 LB	379.7 LB	379.0 LB
30 "			20.2 PSF	16.0 PSF	20.2 PSF	16.0 PSF													100.40 LB-FT	67.5 LB	344.6 LB	349.2 LB
36 "																						
18 "	48 "	9216 in²	22.8 PSF	18.0 PSF	22.8 PSF	18.0 PSF													100.40 LB-FT	104.6 LB	462.2 LB	420.0 LB
24 "																						
30 "																						
36 "																						

36" STAND DEPTH: MAX FACE AREA (2208in² - 9216in²), FRAME QUANTITY (4-7 FRAMES)

UNIT TO FRAME RATIO

STAND CLEAR HEIGHT	MAX MEAN UNIT HEIGHT	MAX FACE AREA	MAX FACE AREA : 7 FRAMES				MAX FACE AREA : 6 FRAMES				MAX FACE AREA : 5 FRAMES				MAX FACE AREA : 4 FRAMES				LOAD TRANSFER INFORMATION FOR USE WITH HOST STRUCTURE VERIFICATION ONLY			
			ANCHOR TYPE: 1 OR 4		ANCHORS TYPE: 2 OR 3		ANCHOR TYPE: 1 OR 4		ANCHORS TYPE: 2 OR 3		ANCHOR TYPE: 1 OR 4		ANCHORS TYPE: 2 OR 3		ANCHOR TYPE: 1 OR 4		ANCHORS TYPE: 2 OR 3		MAX. BASE MOMENT (M)	MAX. BASE SHEAR (V)	MAX. BASE UPLIFT (T)	MAX. BASE GRAVITY (C)
			MAX ALLOWABLE LATERAL LOAD	MAX ALLOWABLE UPLIFT	MAX ALLOWABLE LATERAL LOAD	MAX ALLOWABLE UPLIFT	MAX ALLOWABLE LATERAL LOAD	MAX ALLOWABLE UPLIFT	MAX ALLOWABLE LATERAL LOAD	MAX ALLOWABLE UPLIFT	MAX ALLOWABLE LATERAL LOAD	MAX ALLOWABLE UPLIFT	MAX ALLOWABLE LATERAL LOAD	MAX ALLOWABLE UPLIFT	MAX ALLOWABLE LATERAL LOAD	MAX ALLOWABLE UPLIFT	MAX ALLOWABLE LATERAL LOAD	MAX ALLOWABLE UPLIFT				
18 "	24 "	2208 in²	89.3 PSF	70.5 PSF	89.3 PSF	70.5 PSF	76.6 PSF	60.4 PSF	76.6 PSF	60.4 PSF	63.8 PSF	50.4 PSF	63.8 PSF	50.4 PSF	51.0 PSF	40.3 PSF	51.0 PSF	40.3 PSF	100.40 LB-FT	97.9 LB	243.9 LB	268.1 LB
24 "			70.3 PSF	55.5 PSF	70.3 PSF	55.5 PSF	60.2 PSF	47.5 PSF	60.2 PSF	47.5 PSF	50.2 PSF	39.6 PSF	50.2 PSF	39.6 PSF	40.1 PSF	31.7 PSF	40.1 PSF	31.7 PSF	100.40 LB-FT	77.0 LB	214.8 LB	265.4 LB
30 "			58.2 PSF	46.0 PSF	58.2 PSF	46.0 PSF	49.9 PSF	39.4 PSF	49.9 PSF	39.4 PSF	41.6 PSF	32.8 PSF	41.6 PSF	32.8 PSF	33.3 PSF	26.2 PSF	33.3 PSF	26.2 PSF	100.40 LB-FT	63.8 LB	197.1 LB	264.3 LB
36 "			49.8 PSF	39.3 PSF	49.8 PSF	39.3 PSF	42.7 PSF	33.7 PSF	42.7 PSF	33.7 PSF	35.6 PSF	28.1 PSF	35.6 PSF	28.1 PSF	28.5 PSF	22.5 PSF	28.5 PSF	22.5 PSF	100.40 LB-FT	54.6 LB	185.1 LB	263.9 LB
18 "	30 "	3720 in²	53.0 PSF	41.8 PSF	53.0 PSF	41.8 PSF	45.4 PSF	35.9 PSF	45.4 PSF	35.9 PSF	37.9 PSF	29.9 PSF	37.9 PSF	29.9 PSF	30.3 PSF	23.9 PSF	30.3 PSF	23.9 PSF	100.40 LB-FT	97.9 LB	260.2 LB	284.4 LB
24 "			41.7 PSF	32.9 PSF	41.7 PSF	32.9 PSF	35.7 PSF	28.2 PSF	35.7 PSF	28.2 PSF	29.8 PSF	23.5 PSF	29.8 PSF	23.5 PSF	23.8 PSF	18.8 PSF	23.8 PSF	18.8 PSF	100.40 LB-FT	77.0 LB	227.7 LB	278.2 LB
30 "			34.5 PSF	27.3 PSF	34.5 PSF	27.3 PSF	29.6 PSF	23.4 PSF	29.6 PSF	23.4 PSF	24.7 PSF	19.5 PSF	24.7 PSF	19.5 PSF					100.40 LB-FT	63.8 LB	207.7 LB	247.9 LB
36 "			29.6 PSF	23.3 PSF	29.6 PSF	23.3 PSF	25.3 PSF	20.0 PSF	25.3 PSF	20.0 PSF	21.1 PSF	16.7 PSF	21.1 PSF	16.7 PSF					100.40 LB-FT	54.6 LB	194.2 LB	246.0 LB
18 "	36 "	5040 in²	39.1 PSF	30.9 PSF	39.1 PSF	30.9 PSF	33.5 PSF	26.5 PSF	33.5 PSF	26.5 PSF	27.9 PSF	22.0 PSF	27.9 PSF	22.0 PSF	22.3 PSF	17.6 PSF	22.3 PSF	17.6 PSF	100.40 LB-FT	97.9 LB	276.5 LB	300.7 LB
24 "			30.8 PSF	24.3 PSF	30.8 PSF	24.3 PSF	26.4 PSF	20.8 PSF	26.4 PSF	20.8 PSF	22.0 PSF	17.3 PSF	22.0 PSF	17.3 PSF					100.40 LB-FT	77.0 LB	240.5 LB	264.1 LB
30 "			25.5 PSF	20.1 PSF	25.5 PSF	20.1 PSF	21.8 PSF	17.2 PSF	21.8 PSF	17.2 PSF									100.40 LB-FT	63.8 LB	218.4 LB	240.6 LB
36 "			21.8 PSF	17.2 PSF	21.8 PSF	17.2 PSF													100.40 LB-FT	54.6 LB	203.3 LB	224.3 LB
18 "	42 "	6720 in²	29.3 PSF	23.1 PSF	29.3 PSF	23.1 PSF	25.1 PSF	19.8 PSF	25.1 PSF	19.8 PSF	20.9 PSF	16.5 PSF	20.9 PSF	16.5 PSF					100.40 LB-FT	97.9 LB	292.8 LB	290.0 LB
24 "			23.1 PSF	18.2 PSF	23.1 PSF	18.2 PSF													100.40 LB-FT	77.0 LB	253.3 LB	246.0 LB
30 "																						
36 "																						
18 "	48 "	9216 in²	21.4 PSF	16.9 PSF	21.4 PSF	16.9 PSF													100.40 LB-FT	97.9 LB	309.2 LB	275.5 LB
24 "																						
30 "																						
36 "																						

FL 16921.1

ENGINEERING EXPRESS®
POSTAL ADDRESS:
2234 NORTH FEDERAL HWY #7664
BOCA RATON, FL 33431
ENGINEERINGEXPRESS.COM

PRECISION ALUMINUM PRODUCTS, INC.
1339 SW 1ST WAY
DEERFIELD BEACH, FL 33441
(954) 480-6919

ALUMINUM A/C STANDS
FLORIDA BUILDING CODE EIGHTH EDITION (2023)
FLORIDA STATEWIDE APPROVAL (FSA FL# 16921.1)

REMARKS	DRWN	CHKD	DATE
PREV. SUBMITTAL (20-32768)	CSL	RWN	12/15/20
2023 FBC UPDATE & TECH. CHANGES	MRT	RWN	12/08/23

COPYRIGHT ENGINEERING EXPRESS®

23-69401

SCALE: NTS UNLESS NOTED

12/21/2023 1:55 PM MILTON c:\users\milton\engineering express\production - documents\projects\23-\23-69401 2023 product fbc update fl16921\work\2023 fbc\drawings & cad\23-69401c - fl16921.1 - cad.dwg

"STD" STAND DESIGN SCHEDULE CONTINUED

DESIGN SCHEDULES NOTES:

1. DESIGN SCHEDULES SHOWN HEREIN ARE REFERENCED TO ALLOWABLE STRENGTH DESIGN (ASD) METHODOLOGY.
2. EMPTY CELLS DENOTES CONDITIONS NOT ALLOWED TO USE.
3. MAXIMUM CALCULATED FACE AREA SHALL BE EQUAL TO OR LESS THAN THE MAXIMUM ALLOWABLE FACE AREA FOR EACH CONFIGURATION.
4. REFERENCE ANCHOR SCHEDULE FOR ANCHOR TYPES LISTED HEREIN.

24" STAND DEPTH: MAX FACE AREA (1656in² - 6912in²), FRAME QUANTITY (3-6 FRAMES)

STAND CLEAR HEIGHT	MAX MEAN UNIT HEIGHT	MAX FACE AREA	UNIT TO FRAME RATIO: MAX FACE AREA : 6 FRAMES — ANCHOR TYPE: 1 OR 4 — MAX ALLOWABLE LATERAL LOAD	MAX ALLOWABLE UPLIFT	ANCHORS TYPE: 2 OR 3 — MAX ALLOWABLE LATERAL LOAD	MAX ALLOWABLE UPLIFT	MAX FACE AREA : 5 FRAMES — ANCHOR TYPE: 1 OR 4 — MAX ALLOWABLE LATERAL LOAD	MAX ALLOWABLE UPLIFT	ANCHORS TYPE: 2 OR 3 — MAX ALLOWABLE LATERAL LOAD	MAX ALLOWABLE UPLIFT	MAX FACE AREA : 4 FRAMES — ANCHOR TYPE: 1 OR 4 — MAX ALLOWABLE LATERAL LOAD	MAX ALLOWABLE UPLIFT	ANCHORS TYPE: 2 OR 3 — MAX ALLOWABLE LATERAL LOAD	MAX ALLOWABLE UPLIFT	MAX FACE AREA : 3 FRAMES — ANCHOR TYPE: 1 OR 4 — MAX ALLOWABLE LATERAL LOAD	MAX ALLOWABLE UPLIFT	ANCHORS TYPE: 2 OR 3 — MAX ALLOWABLE LATERAL LOAD	MAX ALLOWABLE UPLIFT	LOAD TRANSFER INFORMATION FOR USE WITH HOST STRUCTURE VERIFICATION ONLY — MAX. BASE MOMENT (M)	MAX. BASE SHEAR (V)	MAX. BASE UPLIFT (T)	MAX. BASE GRAVITY (C)
18 "	24 "	1656 in²	109.2 PSF	86.2 PSF	109.2 PSF	86.2 PSF	91.0 PSF	71.8 PSF	91.0 PSF	71.8 PSF	72.8 PSF	57.4 PSF	72.8 PSF	57.4 PSF	54.6 PSF	43.1 PSF	54.6 PSF	43.1 PSF	100.40 LB-FT	104.6 LB	359.2 LB	373.2 LB
24 "			85.5 PSF	67.5 PSF	85.5 PSF	67.5 PSF	71.2 PSF	56.2 PSF	71.2 PSF	56.2 PSF	57.0 PSF	45.0 PSF	57.0 PSF	45.0 PSF	42.7 PSF	33.7 PSF	42.7 PSF	33.7 PSF	100.40 LB-FT	81.9 LB	319.8 LB	362.5 LB
30 "			70.5 PSF	55.6 PSF	70.5 PSF	55.6 PSF	58.7 PSF	46.4 PSF	58.7 PSF	46.4 PSF	47.0 PSF	37.1 PSF	47.0 PSF	37.1 PSF	35.2 PSF	27.8 PSF	35.2 PSF	27.8 PSF	100.40 LB-FT	67.5 LB	295.5 LB	356.4 LB
36 "			60.1 PSF	47.4 PSF	60.1 PSF	47.4 PSF	50.0 PSF	39.5 PSF	50.0 PSF	39.5 PSF	40.0 PSF	31.6 PSF	40.0 PSF	31.6 PSF	30.0 PSF	23.7 PSF	30.0 PSF	23.7 PSF	100.40 LB-FT	57.6 LB	279.0 LB	352.5 LB
18 "	30 "	2790 in²	64.8 PSF	51.1 PSF	64.8 PSF	51.1 PSF	54.0 PSF	42.6 PSF	54.0 PSF	42.6 PSF	43.2 PSF	34.1 PSF	43.2 PSF	34.1 PSF	32.4 PSF	25.5 PSF	32.4 PSF	25.5 PSF	100.40 LB-FT	104.6 LB	385.3 LB	399.4 LB
24 "			50.7 PSF	40.0 PSF	50.7 PSF	40.0 PSF	42.3 PSF	33.4 PSF	42.3 PSF	33.4 PSF	33.8 PSF	26.7 PSF	33.8 PSF	26.7 PSF	25.3 PSF	20.0 PSF	25.3 PSF	20.0 PSF	100.40 LB-FT	81.9 LB	340.3 LB	383.0 LB
30 "			41.8 PSF	33.0 PSF	41.8 PSF	33.0 PSF	34.8 PSF	27.5 PSF	34.8 PSF	27.5 PSF	27.9 PSF	22.0 PSF	27.9 PSF	22.0 PSF	20.9 PSF	16.5 PSF	20.9 PSF	16.5 PSF	100.40 LB-FT	67.5 LB	312.4 LB	373.3 LB
36 "			35.6 PSF	28.1 PSF	35.6 PSF	28.1 PSF	29.7 PSF	23.4 PSF	29.7 PSF	23.4 PSF	23.7 PSF	18.7 PSF	23.7 PSF	18.7 PSF					100.40 LB-FT	57.6 LB	293.4 LB	333.1 LB
18 "	36 "	3780 in²	47.8 PSF	37.7 PSF	47.8 PSF	37.7 PSF	39.8 PSF	31.4 PSF	39.8 PSF	31.4 PSF	31.8 PSF	25.1 PSF	31.8 PSF	25.1 PSF	23.9 PSF	18.8 PSF	23.9 PSF	18.8 PSF	100.40 LB-FT	104.6 LB	411.5 LB	425.5 LB
24 "			37.4 PSF	29.5 PSF	37.4 PSF	29.5 PSF	31.2 PSF	24.6 PSF	31.2 PSF	24.6 PSF	24.9 PSF	19.7 PSF	24.9 PSF	19.7 PSF					100.40 LB-FT	81.9 LB	360.8 LB	369.8 LB
30 "			30.8 PSF	24.3 PSF	30.8 PSF	24.3 PSF	25.7 PSF	20.3 PSF	25.7 PSF	20.3 PSF	20.5 PSF	16.2 PSF	20.5 PSF	16.2 PSF					100.40 LB-FT	67.5 LB	329.3 LB	356.5 LB
36 "			26.3 PSF	20.7 PSF	26.3 PSF	20.7 PSF	21.9 PSF	17.3 PSF	21.9 PSF	17.3 PSF									100.40 LB-FT	57.6 LB	307.8 LB	327.3 LB
18 "	42 "	5040 in²	35.8 PSF	28.3 PSF	35.8 PSF	28.3 PSF	29.9 PSF	23.6 PSF	29.9 PSF	23.6 PSF	23.9 PSF	18.8 PSF	23.9 PSF	18.8 PSF					100.40 LB-FT	104.6 LB	437.7 LB	418.0 LB
24 "			28.1 PSF	22.1 PSF	28.1 PSF	22.1 PSF	23.4 PSF	18.4 PSF	23.4 PSF	18.4 PSF									100.40 LB-FT	81.9 LB	381.3 LB	370.0 LB
30 "			23.1 PSF	18.2 PSF	23.1 PSF	18.2 PSF													100.40 LB-FT	67.5 LB	346.2 LB	339.6 LB
36 "																						
18 "	48 "	6912 in²	26.1 PSF	20.6 PSF	26.1 PSF	20.6 PSF	21.8 PSF	17.2 PSF	21.8 PSF	17.2 PSF									100.40 LB-FT	104.6 LB	463.9 LB	423.9 LB
24 "			20.4 PSF	16.1 PSF	20.4 PSF	16.1 PSF													100.40 LB-FT	81.9 LB	401.8 LB	377.0 LB
30 "																						
36 "																						

36" STAND DEPTH: MAX FACE AREA (1656in² - 6912in²), FRAME QUANTITY (3-6 FRAMES)

STAND CLEAR HEIGHT	MAX MEAN UNIT HEIGHT	MAX FACE AREA	UNIT TO FRAME RATIO: MAX FACE AREA : 6 FRAMES — ANCHOR TYPE: 1 OR 4 — MAX ALLOWABLE LATERAL LOAD	MAX ALLOWABLE UPLIFT	ANCHORS TYPE: 2 OR 3 — MAX ALLOWABLE LATERAL LOAD	MAX ALLOWABLE UPLIFT	MAX FACE AREA : 5 FRAMES — ANCHOR TYPE: 1 OR 4 — MAX ALLOWABLE LATERAL LOAD	MAX ALLOWABLE UPLIFT	ANCHORS TYPE: 2 OR 3 — MAX ALLOWABLE LATERAL LOAD	MAX ALLOWABLE UPLIFT	MAX FACE AREA : 4 FRAMES — ANCHOR TYPE: 1 OR 4 — MAX ALLOWABLE LATERAL LOAD	MAX ALLOWABLE UPLIFT	ANCHORS TYPE: 2 OR 3 — MAX ALLOWABLE LATERAL LOAD	MAX ALLOWABLE UPLIFT	MAX FACE AREA : 3 FRAMES — ANCHOR TYPE: 1 OR 4 — MAX ALLOWABLE LATERAL LOAD	MAX ALLOWABLE UPLIFT	ANCHORS TYPE: 2 OR 3 — MAX ALLOWABLE LATERAL LOAD	MAX ALLOWABLE UPLIFT	LOAD TRANSFER INFORMATION FOR USE WITH HOST STRUCTURE VERIFICATION ONLY — MAX. BASE MOMENT (M)	MAX. BASE SHEAR (V)	MAX. BASE UPLIFT (T)	MAX. BASE GRAVITY (C)
18 "	24 "	1656 in²	102.1 PSF	80.6 PSF	102.1 PSF	80.6 PSF	85.1 PSF	67.2 PSF	85.1 PSF	67.2 PSF	68.1 PSF	53.7 PSF	68.1 PSF	53.7 PSF	51.0 PSF	40.3 PSF	51.0 PSF	40.3 PSF	100.40 LB-FT	97.9 LB	245.5 LB	268.1 LB
24 "			80.3 PSF	63.4 PSF	80.3 PSF	63.4 PSF	66.9 PSF	52.8 PSF	66.9 PSF	52.8 PSF	53.5 PSF	42.3 PSF	53.5 PSF	42.3 PSF	40.1 PSF	31.7 PSF	40.1 PSF	31.7 PSF	100.40 LB-FT	77.0 LB	216.4 LB	265.4 LB
30 "			66.6 PSF	52.5 PSF	66.6 PSF	52.5 PSF	55.5 PSF	43.8 PSF	55.5 PSF	43.8 PSF	44.4 PSF	35.0 PSF	44.4 PSF	35.0 PSF	33.3 PSF	26.2 PSF	33.3 PSF	26.2 PSF	100.40 LB-FT	63.8 LB	198.7 LB	264.3 LB
36 "			57.0 PSF	45.0 PSF	57.0 PSF	45.0 PSF	47.5 PSF	37.5 PSF	47.5 PSF	37.5 PSF	38.0 PSF	30.0 PSF	38.0 PSF	30.0 PSF	28.5 PSF	22.5 PSF	28.5 PSF	22.5 PSF	100.40 LB-FT	54.6 LB	186.7 LB	263.9 LB
18 "	30 "	2790 in²	60.6 PSF	47.8 PSF	60.6 PSF	47.8 PSF	50.5 PSF	39.8 PSF	50.5 PSF	39.8 PSF	40.4 PSF	31.9 PSF	40.4 PSF	31.9 PSF	30.3 PSF	23.9 PSF	30.3 PSF	23.9 PSF	100.40 LB-FT	97.9 LB	261.8 LB	284.4 LB
24 "			47.7 PSF	37.6 PSF	47.7 PSF	37.6 PSF	39.7 PSF	31.3 PSF	39.7 PSF	31.3 PSF	31.8 PSF	25.1 PSF	31.8 PSF	25.1 PSF	23.8 PSF	18.8 PSF	23.8 PSF	18.8 PSF	100.40 LB-FT	77.0 LB	229.3 LB	278.2 LB
30 "			39.5 PSF	31.2 PSF	39.5 PSF	31.2 PSF	32.9 PSF	26.0 PSF	32.9 PSF	26.0 PSF	26.3 PSF	20.8 PSF	26.3 PSF	20.8 PSF					100.40 LB-FT	63.8 LB	209.3 LB	241.2 LB
36 "			33.8 PSF	26.7 PSF	33.8 PSF	26.7 PSF	28.2 PSF	22.2 PSF	28.2 PSF	22.2 PSF	22.5 PSF	17.8 PSF	22.5 PSF	17.8 PSF					100.40 LB-FT	54.6 LB	195.8 LB	239.3 LB
18 "	36 "	3780 in²	44.7 PSF	35.3 PSF	44.7 PSF	35.3 PSF	37.2 PSF	29.4 PSF	37.2 PSF	29.4 PSF	29.8 PSF	23.5 PSF	29.8 PSF	23.5 PSF	22.3 PSF	17.6 PSF	22.3 PSF	17.6 PSF	100.40 LB-FT	97.9 LB	278.1 LB	300.7 LB
24 "			35.2 PSF	27.8 PSF	35.2 PSF	27.8 PSF	29.3 PSF	23.1 PSF	29.3 PSF	23.1 PSF	23.4 PSF	18.5 PSF	23.4 PSF	18.5 PSF					100.40 LB-FT	77.0 LB	242.1 LB	257.3 LB
30 "			29.1 PSF	23.0 PSF	29.1 PSF	23.0 PSF	24.3 PSF	19.1 PSF	24.3 PSF	19.1 PSF									100.40 LB-FT	63.8 LB	220.0 LB	231.6 LB
36 "			24.9 PSF	19.7 PSF	24.9 PSF	19.7 PSF	20.8 PSF	16.4 PSF	20.8 PSF	16.4 PSF									100.40 LB-FT	54.6 LB	204.9 LB	228.1 LB
18 "	42 "	5040 in²	33.5 PSF	26.5 PSF	33.5 PSF	26.5 PSF	27.9 PSF	22.0 PSF	27.9 PSF	22.0 PSF	22.3 PSF	17.6 PSF	22.3 PSF	17.6 PSF					100.40 LB-FT	97.9 LB	294.5 LB	283.3 LB
24 "			26.4 PSF	20.8 PSF	26.4 PSF	20.8 PSF	22.0 PSF	17.3 PSF	22.0 PSF	17.3 PSF									100.40 LB-FT	77.0 LB	255.0 LB	249.9 LB
30 "			21.8 PSF	17.2 PSF	21.8 PSF	17.2 PSF													100.40 LB-FT	63.8 LB	230.6 LB	228.7 LB
36 "																						
18 "	48 "	6912 in²	24.4 PSF	19.3 PSF	24.4 PSF	19.3 PSF	20.3 PSF	16.1 PSF	20.3 PSF	16.1 PSF									100.40 LB-FT	97.9 LB	310.8 LB	279.3 LB
24 "																						
30 "																						
36 "																						

24" STAND DEPTH: MAX FACE AREA (1104in² - 4608in²), FRAME QUANTITY (2-5 FRAMES)

STAND CLEAR HEIGHT	MAX MEAN UNIT HEIGHT	MAX FACE AREA	UNIT TO FRAME RATIO: MAX FACE AREA : 5 FRAMES — ANCHOR TYPE: 1 OR 4 — MAX ALLOWABLE LATERAL LOAD	MAX ALLOWABLE UPLIFT	ANCHORS TYPE: 2 OR 3 — MAX ALLOWABLE LATERAL LOAD	MAX ALLOWABLE UPLIFT	MAX FACE AREA : 4 FRAMES — ANCHOR TYPE: 1 OR 4 — MAX ALLOWABLE LATERAL LOAD	MAX ALLOWABLE UPLIFT	ANCHORS TYPE: 2 OR 3 — MAX ALLOWABLE LATERAL LOAD	MAX ALLOWABLE UPLIFT	MAX FACE AREA : 3 FRAMES — ANCHOR TYPE: 1 OR 4 — MAX ALLOWABLE LATERAL LOAD	MAX ALLOWABLE UPLIFT	ANCHORS TYPE: 2 OR 3 — MAX ALLOWABLE LATERAL LOAD	MAX ALLOWABLE UPLIFT	MAX FACE AREA : 2 FRAMES — ANCHOR TYPE: 1 OR 4 — MAX ALLOWABLE LATERAL LOAD	MAX ALLOWABLE UPLIFT	ANCHORS TYPE: 2 OR 3 — MAX ALLOWABLE LATERAL LOAD	MAX ALLOWABLE UPLIFT	LOAD TRANSFER INFORMATION FOR USE WITH HOST STRUCTURE VERIFICATION ONLY — MAX. BASE MOMENT (M)	MAX. BASE SHEAR (V)	MAX. BASE UPLIFT (T)	MAX. BASE GRAVITY (C)
18 "	24 "	1104 in²	136.5 PSF	107.7 PSF	136.5 PSF	107.7 PSF	109.2 PSF	86.2 PSF	109.2 PSF	86.2 PSF	81.9 PSF	64.6 PSF	81.9 PSF	64.6 PSF	54.6 PSF	43.1 PSF	54.6 PSF	43.1 PSF	100.40 LB-FT	104.6 LB	361.4 LB	373.2 LB
24 "			106.9 PSF	84.4 PSF	106.9 PSF	84.4 PSF	85.5 PSF	67.5 PSF	85.5 PSF	67.5 PSF	64.1 PSF	50.6 PSF	64.1 PSF	50.6 PSF	42.7 PSF	33.7 PSF	42.7 PSF	33.7 PSF	100.40 LB-FT	81.9 LB	322.1 LB	362.5 LB
30 "			88.1 PSF	69.6 PSF	88.1 PSF	69.6 PSF	70.5 PSF	55.6 PSF	70.5 PSF	55.6 PSF	52.8 PSF	41.7 PSF	52.8 PSF	41.7 PSF	35.2 PSF	27.8 PSF	35.2 PSF	27.8 PSF	100.40 LB-FT	67.5 LB	297.8 LB	356.4 LB
36 "			75.1 PSF	59.3 PSF	75.1 PSF	59.3 PSF	60.1 PSF	47.4 PSF	60.1 PSF	47.4 PSF	45.0 PSF	35.5 PSF	45.0 PSF	35.5 PSF	30.0 PSF	23.7 PSF	30.0 PSF	23.7 PSF	100.40 LB-FT	57.6 LB	281.2 LB	352.5 LB
18 "	30 "	1860 in²	81.0 PSF	63.9 PSF	81.0 PSF	63.9 PSF	64.8 PSF	51.1 PSF	64.8 PSF	51.1 PSF	48.6 PSF	38.3 PSF	48.6 PSF	38.3 PSF	32.4 PSF	25.5 PSF	32.4 PSF	25.5 PSF	100.40 LB-FT	104.6 LB	387.6 LB	399.4 LB
24 "			63.4 PSF	50.1 PSF	63.4 PSF	50.1 PSF	50.7 PSF	40.0 PSF	50.7 PSF	40.0 PSF	38.0 PSF	30.0 PSF	38.0 PSF	30.0 PSF	25.3 PSF	20.0 PSF	25.3 PSF	20.0 PSF	100.40 LB-FT	81.9 LB	342.6 LB	383.0 LB
30 "			52.3 PSF	41.3 PSF	52.3 PSF	41.3 PSF	41.8 PSF	33.0 PSF	41.8 PSF	33.0 PSF	31.3 PSF	24.7 PSF	31.3 PSF	24.7 PSF	20.9 PSF	16.5 PSF	20.9 PSF	16.5 PSF	100.40 LB-FT	67.5 LB	314.7 LB	373.3 LB
36 "			44.5 PSF	35.2 PSF	44.5 PSF	35.2 PSF	35.6 PSF	28.1 PSF	35.6 PSF	28.1 PSF	26.7 PSF	21.1 PSF	26.7 PSF	21.1 PSF					100.40 LB-FT	57.6 LB	295.7 LB	321.9 LB
18 "	36 "	2520 in²	59.8 PSF	47.2 PSF	59.8 PSF	47.2 PSF	47.8 PSF	37.7 PSF	47.8 PSF	37.7 PSF	35.8 PSF	28.3 PSF	35.8 PSF	28.3 PSF	23.9 PSF	18.8 PSF	23.9 PSF	18.8 PSF	100.40 LB-FT	104.6 LB	413.8 LB	425.5 LB
24 "			46.8 PSF	36.9 PSF	46.8 PSF	36.9 PSF	37.4 PSF	29.5 PSF	37.4 PSF	29.5 PSF	28.1 PSF	22.1 PSF	28.1 PSF	22.1 PSF					100.40 LB-FT	81.9 LB	363.1 LB	358.5 LB
30 "			38.6 PSF	30.4 PSF	38.6 PSF	30.4 PSF	30.8 PSF	24.3 PSF	30.8 PSF	24.3 PSF	23.1 PSF	18.2 PSF	23.1 PSF	18.2 PSF					100.40 LB-FT	67.5 LB	331.6 LB	345.2 LB
36 "			32.9 PSF	25.9 PSF	32.9 PSF	25.9 PSF	26.3 PSF	20.7 PSF	26.3 PSF	20.7 PSF									100.40 LB-FT	57.6 LB	310.1 LB	313.8 LB
18 "	42 "	3360 in²	44.8 PSF	35.4 PSF	44.8 PSF	35.4 PSF	35.8 PSF	28.3 PSF	35.8 PSF	28.3 PSF	26.9 PSF	21.2 PSF	26.9 PSF	21.2 PSF					100.40 LB-FT	104.6 LB	439.9 LB	406.7 LB
24 "			35.1 PSF	27.7 PSF	35.1 PSF	27.7 PSF	28.1 PSF	22.1 PSF	28.1 PSF	22.1 PSF	21.0 PSF	16.6 PSF	21.0 PSF	16.6 PSF					100.40 LB-FT	81.9 LB	383.5 LB	379.0 LB
30 "			28.9 PSF	22.8 PSF	28.9 PSF	22.8 PSF	23.1 PSF	18.2 PSF	23.1 PSF	18.2 PSF									100.40 LB-FT	67.5 LB	348.5 LB	339.6 LB
36 "			24.6 PSF	19.4 PSF	24.6 PSF	19.4 PSF													100.40 LB-FT	57.6 LB	324.5 LB	314.7 LB
18 "	48 "	4608 in²	32.7 PSF	25.8 PSF	32.7 PSF	25.8 PSF	26.1 PSF	20.6 PSF	26.1 PSF	20.6 PSF									100.40 LB-FT	104.6 LB	466.1 LB	410.4 LB
24 "			25.6 PSF	20.2 PSF	25.6 PSF	20.2 PSF	20.4 PSF	16.1 PSF	20.4 PSF	16.1 PSF									100.40 LB-FT	81.9 LB	404.0 LB	377.0 LB
30 "			21.1 PSF	16.6 PSF	21.1 PSF	16.6 PSF													100.40 LB-FT	67.5 LB	365.4 LB	343.0 LB
36 "																						

FRANK BENNARDO, P.E.
PE# 0046549 CA# 9885

FRANK L. BENNARDO LICENSE No PE0046549 STATE OF FLORIDA PROFESSIONAL ENGINEER

12/28/2023

DECEMBER 21, 2023

FL

FL 16921.1

ENGINEERING EXPRESS®
POSTAL ADDRESS:
2234 NORTH FEDERAL HWY #7664
BOCA RATON, FL 33431
ENGINEERINGEXPRESS.COM

PRECISION ALUMINUM PRODUCTS, INC.
1339 SW 1ST WAY
DEERFIELD BEACH, FL 33441
(954) 480-6919

ALUMINUM A/C STANDS
FLORIDA BUILDING CODE EIGHTH EDITION (2023)
FLORIDA STATEWIDE APPROVAL (FSA FL#16921.1)

REMARKS	DRWN	CHKD	DATE
PREV. SUBMITTAL (20-32768)	CSL	RWN	12/15/20
2023 FBC UPDATE & TECH. CHANGES	MRT	RWN	12/08/23

COPYRIGHT ENGINEERING EXPRESS®

23-69401

SCALE: NTS UNLESS NOTED

12/21/2023 1:55 PM MILTON c:\users\milton\engineering express\production - documents\projects\23-\23-69401 2023 product fbc update fl16921\work\2023 fbc\drawings & cad\23-69401c - fl16921.1 - cad.dwg

"STD" STAND DESIGN SCHEDULE CONTINUED

DESIGN SCHEDULES NOTES:

1. DESIGN SCHEDULES SHOWN HEREIN ARE REFERENCED TO ALLOWABLE STRENGTH DESIGN (ASD) METHODOLOGY.
2. EMPTY CELLS DENOTES CONDITIONS NOT ALLOWED TO USE.
3. MAXIMUM CALCULATED FACE AREA SHALL BE EQUAL TO OR LESS THAN THE MAXIMUM ALLOWABLE FACE AREA FOR EACH CONFIGURATION.
4. REFERENCE ANCHOR SCHEDULE FOR ANCHOR TYPES LISTED HEREIN.

36" STAND DEPTH: MAX FACE AREA (1104in² - 4608in²), FRAME QUANTITY (2-5 FRAMES)

STAND CLEAR HEIGHT	MAX MEAN UNIT HEIGHT	MAX FACE AREA	UNIT TO FRAME RATIO: MAX FACE AREA : 5 FRAMES, ANCHOR TYPE: 1 OR 4 — MAX ALLOWABLE LATERAL LOAD	MAX ALLOWABLE UPLIFT	ANCHORS TYPE: 2 OR 3 — MAX ALLOWABLE LATERAL LOAD	MAX ALLOWABLE UPLIFT	MAX FACE AREA : 4 FRAMES, ANCHOR TYPE: 1 OR 4 — MAX ALLOWABLE LATERAL LOAD	MAX ALLOWABLE UPLIFT	ANCHORS TYPE: 2 OR 3 — MAX ALLOWABLE LATERAL LOAD	MAX ALLOWABLE UPLIFT	MAX FACE AREA : 3 FRAMES, ANCHOR TYPE: 1 OR 4 — MAX ALLOWABLE LATERAL LOAD	MAX ALLOWABLE UPLIFT	ANCHORS TYPE: 2 OR 3 — MAX ALLOWABLE LATERAL LOAD	MAX ALLOWABLE UPLIFT	MAX FACE AREA : 2 FRAMES, ANCHOR TYPE: 1 OR 4 — MAX ALLOWABLE LATERAL LOAD	MAX ALLOWABLE UPLIFT	ANCHORS TYPE: 2 OR 3 — MAX ALLOWABLE LATERAL LOAD	MAX ALLOWABLE UPLIFT	LOAD TRANSFER INFORMATION FOR USE WITH HOST STRUCTURE VERIFICATION ONLY: MAX. BASE MOMENT (M)	MAX. BASE SHEAR (V)	MAX. BASE UPLIFT (T)	MAX. BASE GRAVITY (C)
18 "	24 "	1104 in²	127.7 PSF	100.8 PSF	127.7 PSF	100.8 PSF	102.1 PSF	80.6 PSF	102.1 PSF	80.6 PSF	76.6 PSF	60.4 PSF	76.6 PSF	60.4 PSF	51.0 PSF	40.3 PSF	51.0 PSF	40.3 PSF	100.40 LB-FT	97.9 LB	247.8 LB	268.1 LB
24 "			100.4 PSF	79.3 PSF	100.4 PSF	79.3 PSF	80.3 PSF	63.4 PSF	80.3 PSF	63.4 PSF	60.2 PSF	47.5 PSF	60.2 PSF	47.5 PSF	40.1 PSF	31.7 PSF	40.1 PSF	31.7 PSF	100.40 LB-FT	77.0 LB	218.7 LB	265.4 LB
30 "			83.2 PSF	65.7 PSF	83.2 PSF	65.7 PSF	66.6 PSF	52.5 PSF	66.6 PSF	52.5 PSF	49.9 PSF	39.4 PSF	49.9 PSF	39.4 PSF	33.3 PSF	26.2 PSF	33.3 PSF	26.2 PSF	100.40 LB-FT	63.8 LB	200.9 LB	264.3 LB
36 "			71.2 PSF	56.2 PSF	71.2 PSF	56.2 PSF	57.0 PSF	45.0 PSF	57.0 PSF	45.0 PSF	42.7 PSF	33.7 PSF	42.7 PSF	33.7 PSF	28.5 PSF	22.5 PSF	28.5 PSF	22.5 PSF	100.40 LB-FT	54.6 LB	188.9 LB	263.9 LB
18 "	30 "	1860 in²	75.8 PSF	59.8 PSF	75.8 PSF	59.8 PSF	60.6 PSF	47.8 PSF	60.6 PSF	47.8 PSF	45.4 PSF	35.9 PSF	45.4 PSF	35.9 PSF	30.3 PSF	23.9 PSF	30.3 PSF	23.9 PSF	100.40 LB-FT	97.9 LB	264.1 LB	284.4 LB
24 "			59.6 PSF	47.0 PSF	59.6 PSF	47.0 PSF	47.7 PSF	37.6 PSF	47.7 PSF	37.6 PSF	35.7 PSF	28.2 PSF	35.7 PSF	28.2 PSF	23.8 PSF	18.8 PSF	23.8 PSF	18.8 PSF	100.40 LB-FT	77.0 LB	231.5 LB	278.2 LB
30 "			49.4 PSF	39.0 PSF	49.4 PSF	39.0 PSF	39.5 PSF	31.2 PSF	39.5 PSF	31.2 PSF	29.6 PSF	23.4 PSF	29.6 PSF	23.4 PSF					100.40 LB-FT	63.8 LB	211.6 LB	229.9 LB
36 "			42.3 PSF	33.4 PSF	42.3 PSF	33.4 PSF	33.8 PSF	26.7 PSF	33.8 PSF	26.7 PSF	25.3 PSF	20.0 PSF	25.3 PSF	20.0 PSF					100.40 LB-FT	54.6 LB	198.0 LB	228.0 LB
18 "	36 "	2520 in²	55.9 PSF	44.1 PSF	55.9 PSF	44.1 PSF	44.7 PSF	35.3 PSF	44.7 PSF	35.3 PSF	33.5 PSF	26.5 PSF	33.5 PSF	26.5 PSF	22.3 PSF	17.6 PSF	22.3 PSF	17.6 PSF	100.40 LB-FT	97.9 LB	280.4 LB	300.7 LB
24 "			44.0 PSF	34.7 PSF	44.0 PSF	34.7 PSF	35.2 PSF	27.8 PSF	35.2 PSF	27.8 PSF	26.4 PSF	20.8 PSF	26.4 PSF	20.8 PSF					100.40 LB-FT	77.0 LB	244.4 LB	246.1 LB
30 "			36.4 PSF	28.7 PSF	36.4 PSF	28.7 PSF	29.1 PSF	23.0 PSF	29.1 PSF	23.0 PSF	21.8 PSF	17.2 PSF	21.8 PSF	17.2 PSF					100.40 LB-FT	63.8 LB	222.2 LB	240.6 LB
36 "			31.2 PSF	24.6 PSF	31.2 PSF	24.6 PSF	24.9 PSF	19.7 PSF	24.9 PSF	19.7 PSF									100.40 LB-FT	54.6 LB	207.1 LB	214.6 LB
18 "	42 "	3360 in²	41.9 PSF	33.1 PSF	41.9 PSF	33.1 PSF	33.5 PSF	26.5 PSF	33.5 PSF	26.5 PSF	25.1 PSF	19.8 PSF	25.1 PSF	19.8 PSF					100.40 LB-FT	97.9 LB	296.7 LB	272.0 LB
24 "			33.0 PSF	26.0 PSF	33.0 PSF	26.0 PSF	26.4 PSF	20.8 PSF	26.4 PSF	20.8 PSF									100.40 LB-FT	77.0 LB	257.2 LB	236.4 LB
30 "			27.3 PSF	21.5 PSF	27.3 PSF	21.5 PSF	21.8 PSF	17.2 PSF	21.8 PSF	17.2 PSF									100.40 LB-FT	63.8 LB	232.9 LB	228.7 LB
36 "			23.4 PSF	18.4 PSF	23.4 PSF	18.4 PSF													100.40 LB-FT	54.6 LB	216.2 LB	210.2 LB
18 "	48 "	4608 in²	30.5 PSF	24.1 PSF	30.5 PSF	24.1 PSF	24.4 PSF	19.3 PSF	24.4 PSF	19.3 PSF									100.40 LB-FT	97.9 LB	313.0 LB	265.8 LB
24 "			24.0 PSF	19.0 PSF	24.0 PSF	19.0 PSF													100.40 LB-FT	77.0 LB	270.0 LB	235.7 LB
30 "																						
36 "																						

24" STAND DEPTH: MAX FACE AREA (552in² - 2304in²), FRAME QUANTITY (2-3 FRAMES)

STAND CLEAR HEIGHT	MAX MEAN UNIT HEIGHT	MAX FACE AREA	UNIT TO FRAME RATIO: MAX FACE AREA : 3 FRAMES, ANCHOR TYPE: 1 OR 4 — MAX ALLOWABLE LATERAL LOAD	MAX ALLOWABLE UPLIFT	ANCHOR TYPE: 2 OR 3 — MAX ALLOWABLE LATERAL LOAD	MAX ALLOWABLE UPLIFT	MAX FACE AREA : 2 FRAMES, ANCHOR TYPE: 1 OR 4 — MAX ALLOWABLE LATERAL LOAD	MAX ALLOWABLE UPLIFT	ANCHOR TYPE: 2 OR 3 — MAX ALLOWABLE LATERAL LOAD	MAX ALLOWABLE UPLIFT	LOAD TRANSFER INFORMATION FOR USE WITH HOST STRUCTURE VERIFICATION ONLY: MAX. BASE MOMENT (M)	MAX. BASE SHEAR (V)	MAX. BASE UPLIFT (T)	MAX. BASE GRAVITY (C)
18 "	24 "	552 in²	163.8 PSF	129.3 PSF	163.8 PSF	129.3 PSF	109.2 PSF	86.2 PSF	109.2 PSF	86.2 PSF	100.40 LB-FT	104.6 LB	362.9 LB	305.7 LB
24 "			128.3 PSF	101.2 PSF	128.3 PSF	101.2 PSF	85.5 PSF	67.5 PSF	85.5 PSF	67.5 PSF	100.40 LB-FT	81.9 LB	323.6 LB	295.0 LB
30 "			105.7 PSF	83.5 PSF	105.7 PSF	83.5 PSF	70.5 PSF	55.6 PSF	70.5 PSF	55.6 PSF	100.40 LB-FT	67.5 LB	299.3 LB	288.9 LB
36 "			90.1 PSF	71.1 PSF	90.1 PSF	71.1 PSF	60.1 PSF	47.4 PSF	60.1 PSF	47.4 PSF	100.40 LB-FT	57.6 LB	282.7 LB	285.0 LB
18 "	30 "	930 in²	97.2 PSF	76.7 PSF	97.2 PSF	76.7 PSF	64.8 PSF	51.1 PSF	64.8 PSF	51.1 PSF	100.40 LB-FT	104.6 LB	389.1 LB	331.9 LB
24 "			76.1 PSF	60.1 PSF	76.1 PSF	60.1 PSF	50.7 PSF	40.0 PSF	50.7 PSF	40.0 PSF	100.40 LB-FT	81.9 LB	344.1 LB	315.5 LB
30 "			62.7 PSF	49.5 PSF	62.7 PSF	49.5 PSF	41.8 PSF	33.0 PSF	41.8 PSF	33.0 PSF	100.40 LB-FT	67.5 LB	316.2 LB	305.8 LB
36 "			53.5 PSF	42.2 PSF	53.5 PSF	42.2 PSF	35.6 PSF	28.1 PSF	35.6 PSF	28.1 PSF	100.40 LB-FT	57.6 LB	297.2 LB	299.4 LB
18 "	36 "	1260 in²	71.7 PSF	56.6 PSF	71.7 PSF	56.6 PSF	47.8 PSF	37.7 PSF	47.8 PSF	37.7 PSF	100.40 LB-FT	104.6 LB	415.3 LB	358.0 LB
24 "			56.2 PSF	44.3 PSF	56.2 PSF	44.3 PSF	37.4 PSF	29.5 PSF	37.4 PSF	29.5 PSF	100.40 LB-FT	81.9 LB	364.6 LB	336.0 LB
30 "			46.3 PSF	36.5 PSF	46.3 PSF	36.5 PSF	30.8 PSF	24.3 PSF	30.8 PSF	24.3 PSF	100.40 LB-FT	67.5 LB	333.1 LB	322.7 LB
36 "			39.5 PSF	31.1 PSF	39.5 PSF	31.1 PSF	26.3 PSF	20.7 PSF	26.3 PSF	20.7 PSF	100.40 LB-FT	57.6 LB	311.6 LB	313.8 LB
18 "	42 "	1680 in²	53.8 PSF	42.4 PSF	53.8 PSF	42.4 PSF	35.8 PSF	28.3 PSF	35.8 PSF	28.3 PSF	100.40 LB-FT	104.6 LB	441.4 LB	384.2 LB
24 "			42.1 PSF	33.2 PSF	42.1 PSF	33.2 PSF	28.1 PSF	22.1 PSF	28.1 PSF	22.1 PSF	100.40 LB-FT	81.9 LB	385.0 LB	356.5 LB
30 "			34.7 PSF	27.4 PSF	34.7 PSF	27.4 PSF	23.1 PSF	18.2 PSF	23.1 PSF	18.2 PSF	100.40 LB-FT	67.5 LB	350.0 LB	339.6 LB
36 "			29.6 PSF	23.3 PSF	29.6 PSF	23.3 PSF					100.40 LB-FT	57.6 LB	326.0 LB	305.7 LB
18 "	48 "	2304 in²	39.2 PSF	30.9 PSF	39.2 PSF	30.9 PSF	26.1 PSF	20.6 PSF	26.1 PSF	20.6 PSF	100.40 LB-FT	104.6 LB	467.6 LB	410.4 LB
24 "			30.7 PSF	24.2 PSF	30.7 PSF	24.2 PSF	20.4 PSF	16.1 PSF	20.4 PSF	16.1 PSF	100.40 LB-FT	81.9 LB	405.5 LB	377.0 LB
30 "			25.3 PSF	20.0 PSF	25.3 PSF	20.0 PSF					100.40 LB-FT	67.5 LB	366.9 LB	334.0 LB
36 "			21.6 PSF	17.0 PSF	21.6 PSF	17.0 PSF					100.40 LB-FT	57.6 LB	340.4 LB	320.1 LB

36" STAND DEPTH: MAX FACE AREA (552in² - 2304in²), FRAME QUANTITY (2-3 FRAMES)

STAND CLEAR HEIGHT	MAX MEAN UNIT HEIGHT	MAX FACE AREA	UNIT TO FRAME RATIO: MAX FACE AREA : 3 FRAMES, ANCHOR TYPE: 1 OR 4 — MAX ALLOWABLE LATERAL LOAD	MAX ALLOWABLE UPLIFT	ANCHOR TYPE: 2 OR 3 — MAX ALLOWABLE LATERAL LOAD	MAX ALLOWABLE UPLIFT	MAX FACE AREA : 2 FRAMES, ANCHOR TYPE: 1 OR 4 — MAX ALLOWABLE LATERAL LOAD	MAX ALLOWABLE UPLIFT	ANCHOR TYPE: 2 OR 3 — MAX ALLOWABLE LATERAL LOAD	MAX ALLOWABLE UPLIFT	LOAD TRANSFER INFORMATION FOR USE WITH HOST STRUCTURE VERIFICATION ONLY: MAX. BASE MOMENT (M)	MAX. BASE SHEAR (V)	MAX. BASE UPLIFT (T)	MAX. BASE GRAVITY (C)
18 "	24 "	552 in²	153.2 PSF	120.9 PSF	153.2 PSF	120.9 PSF	102.1 PSF	80.6 PSF	102.1 PSF	80.6 PSF	100.40 LB-FT	97.9 LB	249.3 LB	200.6 LB
24 "			120.5 PSF	95.1 PSF	120.5 PSF	95.1 PSF	80.3 PSF	63.4 PSF	80.3 PSF	63.4 PSF	100.40 LB-FT	77.0 LB	220.2 LB	197.9 LB
30 "			99.9 PSF	78.8 PSF	99.9 PSF	78.8 PSF	66.6 PSF	52.5 PSF	66.6 PSF	52.5 PSF	100.40 LB-FT	63.8 LB	202.4 LB	196.8 LB
36 "			85.5 PSF	67.5 PSF	85.5 PSF	67.5 PSF	57.0 PSF	45.0 PSF	57.0 PSF	45.0 PSF	100.40 LB-FT	54.6 LB	190.4 LB	196.4 LB
18 "	30 "	930 in²	90.9 PSF	71.8 PSF	90.9 PSF	71.8 PSF	60.6 PSF	47.8 PSF	60.6 PSF	47.8 PSF	100.40 LB-FT	97.9 LB	265.6 LB	216.9 LB
24 "			71.5 PSF	56.5 PSF	71.5 PSF	56.5 PSF	47.7 PSF	37.6 PSF	47.7 PSF	37.6 PSF	100.40 LB-FT	77.0 LB	233.0 LB	210.7 LB
30 "			59.3 PSF	46.8 PSF	59.3 PSF	46.8 PSF	39.5 PSF	31.2 PSF	39.5 PSF	31.2 PSF	100.40 LB-FT	63.8 LB	213.1 LB	207.4 LB
36 "			50.7 PSF	40.0 PSF	50.7 PSF	40.0 PSF	33.8 PSF	26.7 PSF	33.8 PSF	26.7 PSF	100.40 LB-FT	54.6 LB	199.5 LB	205.5 LB
18 "	36 "	1260 in²	67.1 PSF	53.0 PSF	67.1 PSF	53.0 PSF	44.7 PSF	35.3 PSF	44.7 PSF	35.3 PSF	100.40 LB-FT	97.9 LB	281.9 LB	233.2 LB
24 "			52.8 PSF	41.7 PSF	52.8 PSF	41.7 PSF	35.2 PSF	27.8 PSF	35.2 PSF	27.8 PSF	100.40 LB-FT	77.0 LB	245.9 LB	223.6 LB
30 "			43.7 PSF	34.5 PSF	43.7 PSF	34.5 PSF	29.1 PSF	23.0 PSF	29.1 PSF	23.0 PSF	100.40 LB-FT	63.8 LB	223.7 LB	218.1 LB
36 "			37.4 PSF	29.5 PSF	37.4 PSF	29.5 PSF	24.9 PSF	19.7 PSF	24.9 PSF	19.7 PSF	100.40 LB-FT	54.6 LB	208.6 LB	214.6 LB
18 "	42 "	1680 in²	50.3 PSF	39.7 PSF	50.3 PSF	39.7 PSF	33.5 PSF	26.5 PSF	33.5 PSF	26.5 PSF	100.40 LB-FT	97.9 LB	298.2 LB	249.5 LB
24 "			39.6 PSF	31.2 PSF	39.6 PSF	31.2 PSF	26.4 PSF	20.8 PSF	26.4 PSF	20.8 PSF	100.40 LB-FT	77.0 LB	258.7 LB	236.4 LB
30 "			32.8 PSF	25.9 PSF	32.8 PSF	25.9 PSF	21.8 PSF	17.2 PSF	21.8 PSF	17.2 PSF	100.40 LB-FT	63.8 LB	234.4 LB	228.7 LB
36 "			28.1 PSF	22.1 PSF	28.1 PSF	22.1 PSF					100.40 LB-FT	54.6 LB	217.7 LB	201.2 LB
18 "	48 "	2304 in²	36.7 PSF	28.9 PSF	36.7 PSF	28.9 PSF	24.4 PSF	19.3 PSF	24.4 PSF	19.3 PSF	100.40 LB-FT	97.9 LB	314.5 LB	265.8 LB
24 "			28.8 PSF	22.8 PSF	28.8 PSF	22.8 PSF					100.40 LB-FT	77.0 LB	271.5 LB	226.7 LB
30 "			23.9 PSF	18.8 PSF	23.9 PSF	18.8 PSF					100.40 LB-FT	63.8 LB	245.0 LB	216.9 LB
36 "			20.4 PSF	16.1 PSF	20.4 PSF	16.1 PSF					100.40 LB-FT	54.6 LB	226.9 LB	210.3 LB

FRANK BENNARDO, P.E.
PE# 0046549 CA# 9885

FRANK L. BENNARDO LICENSE No PE0046549 STATE OF FLORIDA PROFESSIONAL ENGINEER
12/28/2023

DECEMBER 21, 2023

FL

FL 16921.1

ENGINEERING EXPRESS®
POSTAL ADDRESS:
2234 NORTH FEDERAL HWY #7664
BOCA RATON, FL 33431
ENGINEERINGEXPRESS.COM

PRECISION ALUMINUM PRODUCTS, INC.
1339 SW 1ST WAY
DEERFIELD BEACH, FL 33441
(954) 480-6919

ALUMINUM A/C STANDS
FLORIDA BUILDING CODE EIGHTH EDITION (2023)
FLORIDA STATEWIDE APPROVAL (FSA FL#16921.1)

REMARKS	DRWN	CHKD	DATE
PREV. SUBMITTAL (20-32768)	CSL	RWN	12/15/20
2023 FBC UPDATE & TECH. CHANGES	MRT	RWN	12/08/23

COPYRIGHT ENGINEERING EXPRESS®

23-69401

SCALE: NTS UNLESS NOTED

12/21/2023 1:55 PM MILTON c:\users\milton\engineering express\production - documents\projects\23-\23-69401 2023 product fbc update fl16921\work\2023 fbc\drawings & cad\23-69401c - fl16921.1 - cad.dwg

"HD" STAND DESIGN SCHEDULE

DESIGN SCHEDULES NOTES:

1. DESIGN SCHEDULES SHOWN HEREIN ARE REFERENCED TO ALLOWABLE STRENGTH DESIGN (ASD) METHODOLOGY.
2. EMPTY CELLS DENOTES CONDITIONS NOT ALLOWED TO USE.
3. MAXIMUM CALCULATED FACE AREA SHALL BE EQUAL TO OR LESS THAN THE MAXIMUM ALLOWABLE FACE AREA FOR EACH CONFIGURATION.
4. REFERENCE ANCHOR SCHEDULE FOR ANCHOR TYPES LISTED HEREIN.

FRANK BENNARDO, P.E.
PE# 0046549 CA# 9885

FRANK L. BENNARDO LICENSE No PE0046549 STATE OF FLORIDA PROFESSIONAL ENGINEER

12/28/2023

DECEMBER 21, 2023

FL

24" STAND DEPTH: MAX FACE AREA (2760in² - 11520in²), FRAME QUANTITY (5-8 FRAMES)

UNIT TO FRAME RATIO

STAND CLEAR HEIGHT	MAX MEAN UNIT HEIGHT	MAX FACE AREA	MAX FACE AREA : 8 FRAMES				MAX FACE AREA : 7 FRAMES				MAX FACE AREA : 6 FRAMES				MAX FACE AREA : 5 FRAMES				LOAD TRANSFER INFORMATION FOR USE WITH HOST STRUCTURE VERIFICATION ONLY			
			ANCHOR TYPE: 1 OR 4		ANCHORS TYPE: 2 OR 3		ANCHOR TYPE: 1 OR 4		ANCHORS TYPE: 2 OR 3		ANCHOR TYPE: 1 OR 4		ANCHORS TYPE: 2 OR 3		ANCHOR TYPE: 1 OR 4		ANCHORS TYPE: 2 OR 3					
			MAX ALLOWABLE LATERAL LOAD	MAX ALLOWABLE UPLIFT	MAX ALLOWABLE LATERAL LOAD	MAX ALLOWABLE UPLIFT	MAX ALLOWABLE LATERAL LOAD	MAX ALLOWABLE UPLIFT	MAX ALLOWABLE LATERAL LOAD	MAX ALLOWABLE UPLIFT	MAX ALLOWABLE LATERAL LOAD	MAX ALLOWABLE UPLIFT	MAX ALLOWABLE LATERAL LOAD	MAX ALLOWABLE UPLIFT	MAX ALLOWABLE LATERAL LOAD	MAX ALLOWABLE UPLIFT	MAX ALLOWABLE LATERAL LOAD	MAX ALLOWABLE UPLIFT	MAX. BASE MOMENT (M)	MAX. BASE SHEAR (V)	MAX. BASE UPLIFT (T)	MAX. BASE GRAVITY (C)
18 "	24 "	2760 in²	200.0 PSF	157.8 PSF	171.4 PSF	135.3 PSF	176.3 PSF	139.2 PSF	150.0 PSF	118.4 PSF	151.1 PSF	119.3 PSF	128.7 PSF	101.6 PSF	125.9 PSF	99.4 PSF	107.4 PSF	84.7 PSF	247.00 LB-FT	241.4 LB	838.5 LB	684.6 LB
24 "			158.5 PSF	125.1 PSF	141.3 PSF	111.5 PSF	138.7 PSF	109.5 PSF	123.7 PSF	97.6 PSF	118.9 PSF	93.8 PSF	106.1 PSF	83.8 PSF	99.1 PSF	78.2 PSF	88.5 PSF	69.9 PSF	247.00 LB-FT	189.9 LB	753.3 LB	662.4 LB
30 "			130.6 PSF	103.1 PSF	130.6 PSF	103.1 PSF	114.3 PSF	90.2 PSF	114.3 PSF	90.2 PSF	98.0 PSF	77.3 PSF	98.0 PSF	77.3 PSF	81.6 PSF	64.4 PSF	81.6 PSF	64.4 PSF	245.70 LB-FT	156.5 LB	696.5 LB	647.8 LB
36 "			104.2 PSF	82.3 PSF	104.2 PSF	82.3 PSF	91.2 PSF	72.0 PSF	91.2 PSF	72.0 PSF	78.1 PSF	61.7 PSF	78.1 PSF	61.7 PSF	65.1 PSF	51.4 PSF	65.1 PSF	51.4 PSF	229.00 LB-FT	124.8 LB	615.3 LB	606.6 LB
18 "	30 "	4650 in²	119.6 PSF	94.4 PSF	100.1 PSF	79.1 PSF	104.6 PSF	82.6 PSF	87.7 PSF	69.2 PSF	89.7 PSF	70.8 PSF	75.2 PSF	59.4 PSF	74.7 PSF	59.0 PSF	62.7 PSF	49.5 PSF	247.00 LB-FT	241.4 LB	900.9 LB	745.0 LB
24 "			94.1 PSF	74.3 PSF	82.8 PSF	65.3 PSF	82.3 PSF	65.0 PSF	72.5 PSF	57.2 PSF	70.5 PSF	55.7 PSF	62.2 PSF	49.1 PSF	58.8 PSF	46.4 PSF	51.9 PSF	40.9 PSF	247.00 LB-FT	189.9 LB	800.7 LB	709.9 LB
30 "			77.5 PSF	61.2 PSF	77.5 PSF	61.2 PSF	67.8 PSF	53.5 PSF	67.8 PSF	53.5 PSF	58.1 PSF	45.9 PSF	58.1 PSF	45.9 PSF	48.4 PSF	38.2 PSF	48.4 PSF	38.2 PSF	245.70 LB-FT	156.5 LB	735.7 LB	687.0 LB
36 "			61.8 PSF	48.8 PSF	61.8 PSF	48.8 PSF	54.1 PSF	42.7 PSF	54.1 PSF	42.7 PSF	46.4 PSF	36.6 PSF	46.4 PSF	36.6 PSF	38.6 PSF	30.5 PSF	38.6 PSF	30.5 PSF	229.00 LB-FT	124.8 LB	646.5 LB	637.8 LB
18 "	36 "	6300 in²	88.3 PSF	69.7 PSF	72.8 PSF	57.5 PSF	77.2 PSF	61.0 PSF	63.7 PSF	50.3 PSF	66.2 PSF	52.2 PSF	54.7 PSF	43.1 PSF	55.1 PSF	43.5 PSF	45.6 PSF	36.0 PSF	247.00 LB-FT	241.4 LB	961.3 LB	805.3 LB
24 "			69.4 PSF	54.8 PSF	60.3 PSF	47.6 PSF	60.7 PSF	47.9 PSF	52.8 PSF	41.7 PSF	52.1 PSF	41.1 PSF	45.3 PSF	35.8 PSF	43.4 PSF	34.2 PSF	37.8 PSF	29.8 PSF	247.00 LB-FT	189.9 LB	848.2 LB	757.3 LB
30 "			57.2 PSF	45.1 PSF	57.2 PSF	45.1 PSF	50.0 PSF	39.5 PSF	50.0 PSF	39.5 PSF	42.9 PSF	33.8 PSF	42.9 PSF	33.8 PSF	35.7 PSF	28.2 PSF	35.7 PSF	28.2 PSF	245.70 LB-FT	156.5 LB	774.8 LB	726.1 LB
36 "			45.6 PSF	36.0 PSF	45.6 PSF	36.0 PSF	39.9 PSF	31.5 PSF	39.9 PSF	31.5 PSF	34.2 PSF	27.0 PSF	34.2 PSF	27.0 PSF	28.5 PSF	22.5 PSF	28.5 PSF	22.5 PSF	229.00 LB-FT	124.8 LB	677.7 LB	669.0 LB
18 "	42 "	8400 in²	65.8 PSF	52.0 PSF	53.8 PSF	42.5 PSF	57.6 PSF	45.5 PSF	47.1 PSF	37.2 PSF	49.4 PSF	39.0 PSF	40.4 PSF	31.9 PSF	41.2 PSF	32.5 PSF	33.7 PSF	26.6 PSF	246.30 LB-FT	240.7 LB	1016.2 LB	863.4 LB
24 "			52.1 PSF	41.1 PSF	44.7 PSF	35.3 PSF	45.5 PSF	35.9 PSF	39.1 PSF	30.9 PSF	39.0 PSF	30.8 PSF	33.5 PSF	26.5 PSF	32.5 PSF	25.7 PSF	28.0 PSF	22.1 PSF	247.00 LB-FT	189.9 LB	895.7 LB	804.8 LB
30 "			42.9 PSF	33.8 PSF	42.9 PSF	33.8 PSF	37.5 PSF	29.6 PSF	37.5 PSF	29.6 PSF	32.2 PSF	25.4 PSF	32.2 PSF	25.4 PSF	26.8 PSF	21.1 PSF	26.8 PSF	21.1 PSF	245.70 LB-FT	156.5 LB	813.9 LB	765.2 LB
36 "			34.2 PSF	27.0 PSF	34.2 PSF	27.0 PSF	29.9 PSF	23.6 PSF	29.9 PSF	23.6 PSF	25.6 PSF	20.2 PSF	25.6 PSF	20.2 PSF	21.4 PSF	16.9 PSF	21.4 PSF	16.9 PSF	229.00 LB-FT	124.8 LB	708.9 LB	700.2 LB
18 "	48 "	11520 in²	47.3 PSF	37.3 PSF	38.6 PSF	30.5 PSF	41.4 PSF	32.6 PSF	33.8 PSF	26.7 PSF	35.5 PSF	28.0 PSF	29.0 PSF	22.9 PSF	29.6 PSF	23.3 PSF	24.2 PSF	19.1 PSF	242.50 LB-FT	237.0 LB	1059.5 LB	911.5 LB
24 "			37.9 PSF	29.9 PSF	32.2 PSF	25.4 PSF	33.2 PSF	26.2 PSF	28.2 PSF	22.2 PSF	28.4 PSF	22.4 PSF	24.2 PSF	19.1 PSF	23.7 PSF	18.7 PSF	20.1 PSF	15.9 PSF	247.00 LB-FT	189.9 LB	943.2 LB	852.3 LB
30 "			31.3 PSF	24.7 PSF	31.3 PSF	24.7 PSF	27.3 PSF	21.6 PSF	27.3 PSF	21.6 PSF	23.4 PSF	18.5 PSF	23.4 PSF	18.5 PSF					245.70 LB-FT	156.5 LB	853.1 LB	781.9 LB
36 "			24.9 PSF	19.7 PSF	24.9 PSF	19.7 PSF	21.8 PSF	17.2 PSF	21.8 PSF	17.2 PSF									229.00 LB-FT	124.8 LB	740.2 LB	692.9 LB

36" STAND DEPTH: MAX FACE AREA (2760in² - 11520in²), FRAME QUANTITY (5-8 FRAMES)

UNIT TO FRAME RATIO

STAND CLEAR HEIGHT	MAX MEAN UNIT HEIGHT	MAX FACE AREA	MAX FACE AREA : 8 FRAMES				MAX FACE AREA : 7 FRAMES				MAX FACE AREA : 6 FRAMES				MAX FACE AREA : 5 FRAMES				LOAD TRANSFER INFORMATION FOR USE WITH HOST STRUCTURE VERIFICATION ONLY			
			ANCHOR TYPE: 1 OR 4		ANCHORS TYPE: 2 OR 3		ANCHOR TYPE: 1 OR 4		ANCHORS TYPE: 2 OR 3		ANCHOR TYPE: 1 OR 4		ANCHORS TYPE: 2 OR 3		ANCHOR TYPE: 1 OR 4		ANCHORS TYPE: 2 OR 3					
			MAX ALLOWABLE LATERAL LOAD	MAX ALLOWABLE UPLIFT	MAX ALLOWABLE LATERAL LOAD	MAX ALLOWABLE UPLIFT	MAX ALLOWABLE LATERAL LOAD	MAX ALLOWABLE UPLIFT	MAX ALLOWABLE LATERAL LOAD	MAX ALLOWABLE UPLIFT	MAX ALLOWABLE LATERAL LOAD	MAX ALLOWABLE UPLIFT	MAX ALLOWABLE LATERAL LOAD	MAX ALLOWABLE UPLIFT	MAX ALLOWABLE LATERAL LOAD	MAX ALLOWABLE UPLIFT	MAX ALLOWABLE LATERAL LOAD	MAX ALLOWABLE UPLIFT	MAX. BASE MOMENT (M)	MAX. BASE SHEAR (V)	MAX. BASE UPLIFT (T)	MAX. BASE GRAVITY (C)
18 "	24 "	2760 in²	188.0 PSF	148.4 PSF	172.8 PSF	136.4 PSF	164.5 PSF	129.9 PSF	151.3 PSF	119.4 PSF	141.0 PSF	111.3 PSF	129.7 PSF	102.4 PSF	117.5 PSF	92.7 PSF	108.2 PSF	85.4 PSF	247.00 LB-FT	225.2 LB	576.8 LB	441.3 LB
24 "			148.1 PSF	116.9 PSF	142.1 PSF	112.1 PSF	129.6 PSF	102.3 PSF	124.4 PSF	98.2 PSF	111.1 PSF	87.7 PSF	106.7 PSF	84.2 PSF	92.6 PSF	73.1 PSF	89.0 PSF	70.2 PSF	247.00 LB-FT	177.4 LB	510.6 LB	435.4 LB
30 "			123.1 PSF	97.1 PSF	123.1 PSF	97.1 PSF	107.7 PSF	85.0 PSF	107.7 PSF	85.0 PSF	92.3 PSF	72.8 PSF	92.3 PSF	72.8 PSF	76.9 PSF	60.7 PSF	76.9 PSF	60.7 PSF	247.00 LB-FT	147.4 LB	471.0 LB	433.8 LB
36 "			105.7 PSF	83.4 PSF	105.7 PSF	83.4 PSF	92.5 PSF	73.0 PSF	92.5 PSF	73.0 PSF	79.2 PSF	62.5 PSF	79.2 PSF	62.5 PSF	66.0 PSF	52.1 PSF	66.0 PSF	52.1 PSF	247.00 LB-FT	126.6 LB	444.7 LB	433.8 LB
18 "	30 "	4650 in²	111.6 PSF	88.1 PSF	101.5 PSF	80.1 PSF	97.6 PSF	77.1 PSF	88.8 PSF	70.1 PSF	83.7 PSF	66.0 PSF	76.2 PSF	60.2 PSF	69.7 PSF	55.0 PSF	63.6 PSF	50.2 PSF	247.00 LB-FT	225.2 LB	614.3 LB	478.8 LB
24 "			87.9 PSF	69.4 PSF	83.6 PSF	66.0 PSF	76.9 PSF	60.7 PSF	73.2 PSF	57.8 PSF	65.9 PSF	52.0 PSF	62.8 PSF	49.5 PSF	54.9 PSF	43.3 PSF	52.4 PSF	41.3 PSF	247.00 LB-FT	177.4 LB	540.2 LB	465.0 LB
30 "			73.0 PSF	57.6 PSF	73.0 PSF	57.6 PSF	63.9 PSF	50.4 PSF	63.9 PSF	50.4 PSF	54.8 PSF	43.2 PSF	54.8 PSF	43.2 PSF	45.6 PSF	36.0 PSF	45.6 PSF	36.0 PSF	247.00 LB-FT	147.4 LB	495.6 LB	458.4 LB
36 "			62.7 PSF	49.5 PSF	62.7 PSF	49.5 PSF	54.9 PSF	43.3 PSF	54.9 PSF	43.3 PSF	47.0 PSF	37.1 PSF	47.0 PSF	37.1 PSF	39.2 PSF	30.9 PSF	39.2 PSF	30.9 PSF	247.00 LB-FT	126.6 LB	465.8 LB	454.9 LB
18 "	36 "	6300 in²	82.3 PSF	65.0 PSF	74.1 PSF	58.5 PSF	72.0 PSF	56.9 PSF	64.9 PSF	51.2 PSF	61.7 PSF	48.7 PSF	55.7 PSF	43.9 PSF	51.4 PSF	40.6 PSF	46.4 PSF	36.6 PSF	247.00 LB-FT	225.2 LB	651.9 LB	516.4 LB
24 "			64.9 PSF	51.2 PSF	61.2 PSF	48.3 PSF	56.7 PSF	44.8 PSF	53.5 PSF	42.3 PSF	48.6 PSF	38.4 PSF	45.9 PSF	36.2 PSF	40.5 PSF	32.0 PSF	38.3 PSF	30.2 PSF	247.00 LB-FT	177.4 LB	569.8 LB	494.6 LB
30 "			53.9 PSF	42.5 PSF	53.9 PSF	42.5 PSF	47.1 PSF	37.2 PSF	47.1 PSF	37.2 PSF	40.4 PSF	31.9 PSF	40.4 PSF	31.9 PSF	33.7 PSF	26.6 PSF	33.7 PSF	26.6 PSF	247.00 LB-FT	147.4 LB	520.2 LB	482.9 LB
36 "			46.3 PSF	36.5 PSF	46.3 PSF	36.5 PSF	40.5 PSF	31.9 PSF	40.5 PSF	31.9 PSF	34.7 PSF	27.4 PSF	34.7 PSF	27.4 PSF	28.9 PSF	22.8 PSF	28.9 PSF	22.8 PSF	247.00 LB-FT	126.6 LB	486.9 LB	476.0 LB
18 "	42 "	8400 in²	61.7 PSF	48.7 PSF	55.0 PSF	43.4 PSF	54.0 PSF	42.6 PSF	48.2 PSF	38.0 PSF	46.3 PSF	36.5 PSF	41.3 PSF	32.6 PSF	38.6 PSF	30.4 PSF	34.5 PSF	27.2 PSF	247.00 LB-FT	225.2 LB	689.4 LB	553.9 LB
24 "			48.6 PSF	38.4 PSF	45.5 PSF	35.9 PSF	42.5 PSF	33.6 PSF	39.8 PSF	31.4 PSF	36.5 PSF	28.8 PSF	34.1 PSF	26.9 PSF	30.4 PSF	24.0 PSF	28.5 PSF	22.5 PSF	247.00 LB-FT	177.4 LB	599.3 LB	524.2 LB
30 "			40.4 PSF	31.9 PSF	40.4 PSF	31.9 PSF	35.3 PSF	27.9 PSF	35.3 PSF	27.9 PSF	30.3 PSF	23.9 PSF	30.3 PSF	23.9 PSF	25.2 PSF	19.9 PSF	25.2 PSF	19.9 PSF	247.00 LB-FT	147.4 LB	544.7 LB	507.5 LB
36 "			34.7 PSF	27.4 PSF	34.7 PSF	27.4 PSF	30.3 PSF	23.9 PSF	30.3 PSF	23.9 PSF	26.0 PSF	20.5 PSF	26.0 PSF	20.5 PSF	21.7 PSF	17.1 PSF	21.7 PSF	17.1 PSF	247.00 LB-FT	126.6 LB	508.0 LB	497.1 LB
18 "	48 "	11520 in²	45.0 PSF	35.5 PSF	39.7 PSF	31.3 PSF	39.4 PSF	31.1 PSF	34.8 PSF	27.4 PSF	33.7 PSF	26.6 PSF	29.8 PSF	23.5 PSF	28.1 PSF	22.2 PSF	24.9 PSF	19.6 PSF	247.00 LB-FT	225.2 LB	727.0 LB	591.5 LB
24 "			35.4 PSF	28.0 PSF	32.9 PSF	25.9 PSF	31.0 PSF	24.5 PSF	28.8 PSF	22.7 PSF	26.6 PSF	21.0 PSF	24.7 PSF	19.5 PSF	22.1 PSF	17.5 PSF	20.6 PSF	16.2 PSF	247.00 LB-FT	177.4 LB	628.9 LB	553.8 LB
30 "			29.4 PSF	23.2 PSF	29.4 PSF	23.2 PSF	25.8 PSF	20.3 PSF	25.8 PSF	20.3 PSF	22.1 PSF	17.4 PSF	22.1 PSF	17.4 PSF					247.00 LB-FT	147.4 LB	569.3 LB	509.6 LB
36 "			25.3 PSF	19.9 PSF	25.3 PSF	19.9 PSF	22.1 PSF	17.4 PSF	22.1 PSF	17.4 PSF									247.00 LB-FT	126.6 LB	529.1 LB	479.6 LB

24" STAND DEPTH: MAX FACE AREA (2208in² - 9216in²), FRAME QUANTITY (4-7 FRAMES)

UNIT TO FRAME RATIO

STAND CLEAR HEIGHT	MAX MEAN UNIT HEIGHT	MAX FACE AREA	MAX FACE AREA : 7 FRAMES				MAX FACE AREA : 6 FRAMES				MAX FACE AREA : 5 FRAMES				MAX FACE AREA : 4 FRAMES				LOAD TRANSFER INFORMATION FOR USE WITH HOST STRUCTURE VERIFICATION ONLY			
			ANCHOR TYPE: 1 OR 4		ANCHORS TYPE: 2 OR 3		ANCHOR TYPE: 1 OR 4		ANCHORS TYPE: 2 OR 3		ANCHOR TYPE: 1 OR 4		ANCHORS TYPE: 2 OR 3		ANCHOR TYPE: 1 OR 4		ANCHORS TYPE: 2 OR 3					
			MAX ALLOWABLE LATERAL LOAD	MAX ALLOWABLE UPLIFT	MAX ALLOWABLE LATERAL LOAD	MAX ALLOWABLE UPLIFT	MAX ALLOWABLE LATERAL LOAD	MAX ALLOWABLE UPLIFT	MAX ALLOWABLE LATERAL LOAD	MAX ALLOWABLE UPLIFT	MAX ALLOWABLE LATERAL LOAD	MAX ALLOWABLE UPLIFT	MAX ALLOWABLE LATERAL LOAD	MAX ALLOWABLE UPLIFT	MAX ALLOWABLE LATERAL LOAD	MAX ALLOWABLE UPLIFT	MAX ALLOWABLE LATERAL LOAD	MAX ALLOWABLE UPLIFT	MAX. BASE MOMENT (M)	MAX. BASE SHEAR (V)	MAX. BASE UPLIFT (T)	MAX. BASE GRAVITY (C)
18 "	24 "	2208 in²	200.0 PSF	157.8 PSF	187.4 PSF	147.9 PSF	188.9 PSF	149.1 PSF	160.7 PSF	126.9 PSF	157.4 PSF	124.3 PSF	134.0 PSF	105.8 PSF	125.9 PSF	99.4 PSF	107.4 PSF	84.7 PSF	247.00 LB-FT	241.4 LB	839.6 LB	684.6 LB
24 "			173.4 PSF	136.9 PSF	154.5 PSF	121.9 PSF	148.6 PSF	117.3 PSF	132.5 PSF	104.6 PSF	123.8 PSF	97.8 PSF	110.5 PSF	87.2 PSF	99.1 PSF	78.2 PSF	88.5 PSF	69.9 PSF	247.00 LB-FT	189.9 LB	754.5 LB	662.4 LB
30 "			142.9 PSF	112.8 PSF	142.9 PSF	112.8 PSF	122.5 PSF	96.7 PSF	122.5 PSF	96.7 PSF	102.0 PSF	80.6 PSF	102.0 PSF	80.6 PSF	81.6 PSF	64.4 PSF	81.6 PSF	64.4 PSF	245.70 LB-FT	156.5 LB	697.7 LB	647.8 LB
36 "			114.0 PSF	90.0 PSF	114.0 PSF	90.0 PSF	97.7 PSF	77.1 PSF	97.7 PSF	77.1 PSF	81.4 PSF	64.3 PSF	81.4 PSF	64.3 PSF	65.1 PSF	51.4 PSF	65.1 PSF	51.4 PSF	229.00 LB-FT	124.8 LB	616.5 LB	606.6 LB
18 "	30 "	3720 in²	130.8 PSF	103.3 PSF	109.5 PSF	86.4 PSF	112.1 PSF	88.5 PSF	93.9 PSF	74.1 PSF	93.4 PSF	73.7 PSF	78.3 PSF	61.8 PSF	74.7 PSF	59.0 PSF	62.7 PSF	49.5 PSF	247.00 LB-FT	241.4 LB	902.1 LB	745.0 LB
24 "			102.9 PSF	81.2 PSF	90.5 PSF	71.5 PSF	88.2 PSF	69.6 PSF	77.6 PSF	61.3 PSF	73.5 PSF	58.0 PSF	64.7 PSF	51.1 PSF	58.8 PSF	46.4 PSF	51.9 PSF	40.9 PSF	247.00 LB-FT	189.9 LB	802.0 LB	709.9 LB
30 "			84.8 PSF	66.9 PSF	84.8 PSF	66.9 PSF	72.7 PSF	57.4 PSF	72.7 PSF	57.4 PSF	60.5 PSF	47.8 PSF	60.5 PSF	47.8 PSF	48.4 PSF	38.2 PSF	48.4 PSF	38.2 PSF	245.70 LB-FT	156.5 LB	736.9 LB	687.0 LB
36 "			67.6 PSF	53.4 PSF	67.6 PSF	53.4 PSF	58.0 PSF	45.7 PSF	58.0 PSF	45.7 PSF	48.3 PSF	38.1 PSF	48.3 PSF	38.1 PSF	38.6 PSF	30.5 PSF	38.6 PSF	30.5 PSF	229.00 LB-FT	124.8 LB	647.7 LB	637.8 LB
18 "	36 "	5040 in²	96.5 PSF	76.2 PSF	79.6 PSF	62.8 PSF	82.7 PSF	65.3 PSF	68.3 PSF	53.9 PSF	68.9 PSF	54.4 PSF	56.9 PSF	44.9 PSF	55.1 PSF	43.5 PSF	45.6 PSF	36.0 PSF	247.00 LB-FT	241.4 LB	962.5 LB	805.3 LB
24 "			75.9 PSF	59.9 PSF	66.0 PSF	52.1 PSF	65.1 PSF	51.4 PSF	56.6 PSF	44.7 PSF	54.2 PSF	42.8 PSF	47.2 PSF	37.2 PSF	43.4 PSF	34.2 PSF	37.8 PSF	29.8 PSF	247.00 LB-FT	189.9 LB	849.4 LB	757.3 LB
30 "			62.6 PSF	49.4 PSF	62.6 PSF	49.4 PSF	53.6 PSF	42.3 PSF	53.6 PSF	42.3 PSF	44.7 PSF	35.3 PSF	44.7 PSF	35.3 PSF	35.7 PSF	28.2 PSF	35.7 PSF	28.2 PSF	245.70 LB-FT	156.5 LB	776.0 LB	726.1 LB
36 "			49.9 PSF	39.4 PSF	49.9 PSF	39.4 PSF	42.8 PSF	33.8 PSF	42.8 PSF	33.8 PSF	35.6 PSF	28.1 PSF	35.6 PSF	28.1 PSF	28.5 PSF	22.5 PSF	28.5 PSF	22.5 PSF	229.00 LB-FT	124.8 LB	678.9 LB	669.0 LB
18 "	42 "	6720 in²	72.0 PSF	56.8 PSF	58.8 PSF	46.4 PSF	61.7 PSF	48.7 PSF	50.4 PSF	39.8 PSF	51.5 PSF	40.6 PSF	42.1 PSF	33.2 PSF	41.2 PSF	32.5 PSF	33.7 PSF	26.6 PSF	246.30 LB-FT	240.7 LB	1017.0 LB	863.4 LB
24 "			56.9 PSF	44.9 PSF	48.9 PSF	38.6 PSF	48.8 PSF	38.5 PSF	41.9 PSF	33.1 PSF	40.7 PSF	32.1 PSF	34.9 PSF	27.6 PSF	32.5 PSF	25.7 PSF	28.0 PSF	22.1 PSF	247.00 LB-FT	189.9 LB	896.9 LB	804.8 LB
30 "			46.9 PSF	37.0 PSF	46.9 PSF	37.0 PSF	40.2 PSF	31.7 PSF	40.2 PSF	31.7 PSF	33.5 PSF	26.4 PSF	33.5 PSF	26.4 PSF	26.8 PSF	21.1 PSF	26.8 PSF	21.1 PSF	245.70 LB-FT	156.5 LB	815.1 LB	765.2 LB
36 "			37.4 PSF	29.5 PSF	37.4 PSF	29.5 PSF	32.1 PSF	25.3 PSF	32.1 PSF	25.3 PSF	26.7 PSF	21.1 PSF	26.7 PSF	21.1 PSF	21.4 PSF	16.9 PSF	21.4 PSF	16.9 PSF	229.00 LB-FT	124.8 LB	710.1 LB	700.2 LB
18 "	48 "	9216 in²	51.7 PSF	40.8 PSF	42.2 PSF	33.3 PSF	44.3 PSF	35.0 PSF	36.2 PSF	28.6 PSF	36.9 PSF	29.2 PSF	30.2 PSF	23.8 PSF	29.6 PSF	23.3 PSF	24.2 PSF	19.1 PSF	242.50 LB-FT	237.0 LB	1060.4 LB	911.5 LB
24 "			41.5 PSF	32.8 PSF	35.2 PSF	27.8 PSF	35.6 PSF	28.1 PSF	30.2 PSF	23.8 PSF	29.6 PSF	23.4 PSF	25.2 PSF	19.8 PSF	23.7 PSF	18.7 PSF	20.1 PSF	15.9 PSF	247.00 LB-FT	189.9 LB	944.4 LB	852.3 LB
30 "			34.2 PSF	27.0 PSF	34.2 PSF	27.0 PSF	29.3 PSF	23.1 PSF	29.3 PSF	23.1 PSF	24.4 PSF	19.3 PSF	24.4 PSF	19.3 PSF					245.70 LB-FT	156.5 LB	854.3 LB	777.4 LB
36 "			27.3 PSF	21.5 PSF	27.3 PSF	21.5 PSF	23.4 PSF	18.4 PSF	23.4 PSF	18.4 PSF									229.00 LB-FT	124.8 LB	741.4 LB	686.5 LB

FL 16921.1

ENGINEERING EXPRESS®
POSTAL ADDRESS:
2234 NORTH FEDERAL HWY #7664
BOCA RATON, FL 33431
ENGINEERINGEXPRESS.COM

PRECISION ALUMINUM PRODUCTS, INC.
1339 SW 1ST WAY
DEERFIELD BEACH, FL 33441
(954) 480-6919

ALUMINUM A/C STANDS
FLORIDA BUILDING CODE EIGHTH EDITION (2023)
FLORIDA STATEWIDE APPROVAL (FSA FL#16921.1)

REMARKS	DRWN	CHKD	DATE
PREV. SUBMITTAL (20-32768)	CSL	RWN	12/15/20
2023 FBC UPDATE & TECH. CHANGES	MRT	RWN	12/08/23

COPYRIGHT ENGINEERING EXPRESS®

23-69401

SCALE: NTS UNLESS NOTED

8 OF 18

12/21/2023 1:55 PM MILTON c:\users\milton\engineering express\production - documents\projects\23-\23-69401 2023 product fbc update fl16921\work\2023 fbc\drawings & cad\23-69401c - fl16921.1 - cad.dwg

"HD" STAND DESIGN SCHEDULE CONTINUED

DESIGN SCHEDULES NOTES:

1. DESIGN SCHEDULES SHOWN HEREIN ARE REFERENCED TO ALLOWABLE STRENGTH DESIGN (ASD) METHODOLOGY.
2. EMPTY CELLS DENOTES CONDITIONS NOT ALLOWED TO USE.
3. MAXIMUM CALCULATED FACE AREA SHALL BE EQUAL TO OR LESS THAN THE MAXIMUM ALLOWABLE FACE AREA FOR EACH CONFIGURATION.
4. REFERENCE ANCHOR SCHEDULE FOR ANCHOR TYPES LISTED HEREIN.

FRANK BENNARDO, P.E.
PE# 0046549 CA# 9885

FRANK L. BENNARDO LICENSE No PE0046549 STATE OF FLORIDA PROFESSIONAL ENGINEER

12/28/2023

DECEMBER 21, 2023

FL

36" STAND DEPTH: MAX FACE AREA (2208in² - 9216in²), FRAME QUANTITY (4-7 FRAMES)

STAND CLEAR HEIGHT	MAX MEAN UNIT HEIGHT	MAX FACE AREA	UNIT TO FRAME RATIO: MAX FACE AREA : 7 FRAMES, ANCHOR TYPE: 1 OR 4 — MAX ALLOWABLE LATERAL LOAD	MAX ALLOWABLE UPLIFT	ANCHORS TYPE: 2 OR 3 — MAX ALLOWABLE LATERAL LOAD	MAX ALLOWABLE UPLIFT	MAX FACE AREA : 6 FRAMES, ANCHOR TYPE: 1 OR 4 — MAX ALLOWABLE LATERAL LOAD	MAX ALLOWABLE UPLIFT	ANCHORS TYPE: 2 OR 3 — MAX ALLOWABLE LATERAL LOAD	MAX ALLOWABLE UPLIFT	MAX FACE AREA : 5 FRAMES, ANCHOR TYPE: 1 OR 4 — MAX ALLOWABLE LATERAL LOAD	MAX ALLOWABLE UPLIFT	ANCHORS TYPE: 2 OR 3 — MAX ALLOWABLE LATERAL LOAD	MAX ALLOWABLE UPLIFT	MAX FACE AREA : 4 FRAMES, ANCHOR TYPE: 1 OR 4 — MAX ALLOWABLE LATERAL LOAD	MAX ALLOWABLE UPLIFT	ANCHORS TYPE: 2 OR 3 — MAX ALLOWABLE LATERAL LOAD	MAX ALLOWABLE UPLIFT	LOAD TRANSFER INFORMATION FOR USE WITH HOST STRUCTURE VERIFICATION ONLY: MAX. BASE MOMENT (M)	MAX. BASE SHEAR (V)	MAX. BASE UPLIFT (T)	MAX. BASE GRAVITY (C)
18 "	24 "	2208 in²	200.0 PSF	157.8 PSF	188.9 PSF	149.1 PSF	176.3 PSF	139.1 PSF	162.0 PSF	127.9 PSF	146.9 PSF	115.9 PSF	135.1 PSF	106.7 PSF	117.5 PSF	92.7 PSF	108.2 PSF	85.4 PSF	247.00 LB-FT	225.2 LB	575.8 LB	441.3 LB
24 "			162.0 PSF	127.9 PSF	155.3 PSF	122.6 PSF	138.9 PSF	109.6 PSF	133.2 PSF	105.2 PSF	115.7 PSF	91.3 PSF	111.1 PSF	87.7 PSF	92.6 PSF	73.1 PSF	89.0 PSF	70.2 PSF	247.00 LB-FT	177.4 LB	511.8 LB	435.4 LB
30 "			134.6 PSF	106.3 PSF	134.6 PSF	106.3 PSF	115.4 PSF	91.1 PSF	115.4 PSF	91.1 PSF	96.1 PSF	75.9 PSF	96.1 PSF	75.9 PSF	76.9 PSF	60.7 PSF	76.9 PSF	60.7 PSF	247.00 LB-FT	147.4 LB	472.2 LB	433.8 LB
36 "			115.6 PSF	91.2 PSF	115.6 PSF	91.2 PSF	99.1 PSF	78.2 PSF	99.1 PSF	78.2 PSF	82.5 PSF	65.2 PSF	82.5 PSF	65.2 PSF	66.0 PSF	52.1 PSF	66.0 PSF	52.1 PSF	247.00 LB-FT	126.6 LB	445.9 LB	433.8 LB
18 "	30 "	3720 in²	122.0 PSF	96.3 PSF	111.0 PSF	87.6 PSF	104.6 PSF	82.6 PSF	95.2 PSF	75.1 PSF	87.2 PSF	68.8 PSF	79.4 PSF	62.6 PSF	69.7 PSF	55.0 PSF	63.6 PSF	50.2 PSF	247.00 LB-FT	225.2 LB	615.5 LB	478.8 LB
24 "			96.1 PSF	75.9 PSF	91.4 PSF	72.1 PSF	82.4 PSF	65.0 PSF	78.4 PSF	61.9 PSF	68.7 PSF	54.2 PSF	65.4 PSF	51.6 PSF	54.9 PSF	43.3 PSF	52.4 PSF	41.3 PSF	247.00 LB-FT	177.4 LB	541.4 LB	465.0 LB
30 "			79.9 PSF	63.0 PSF	79.9 PSF	63.0 PSF	68.5 PSF	54.0 PSF	68.5 PSF	54.0 PSF	57.0 PSF	45.0 PSF	57.0 PSF	45.0 PSF	45.6 PSF	36.0 PSF	45.6 PSF	36.0 PSF	247.00 LB-FT	147.4 LB	496.8 LB	458.4 LB
36 "			68.6 PSF	54.1 PSF	68.6 PSF	54.1 PSF	58.8 PSF	46.4 PSF	58.8 PSF	46.4 PSF	49.0 PSF	38.7 PSF	49.0 PSF	38.7 PSF	39.2 PSF	30.9 PSF	39.2 PSF	30.9 PSF	247.00 LB-FT	126.6 LB	467.0 LB	454.9 LB
18 "	36 "	5040 in²	90.1 PSF	71.1 PSF	81.1 PSF	64.0 PSF	77.2 PSF	60.9 PSF	69.5 PSF	54.9 PSF	64.3 PSF	50.8 PSF	58.0 PSF	45.8 PSF	51.4 PSF	40.6 PSF	46.4 PSF	36.6 PSF	247.00 LB-FT	225.2 LB	653.1 LB	516.4 LB
24 "			70.9 PSF	56.0 PSF	66.9 PSF	52.8 PSF	60.8 PSF	48.0 PSF	57.4 PSF	45.3 PSF	50.7 PSF	40.0 PSF	47.8 PSF	37.8 PSF	40.5 PSF	32.0 PSF	38.3 PSF	30.2 PSF	247.00 LB-FT	177.4 LB	571.0 LB	494.6 LB
30 "			58.9 PSF	46.5 PSF	58.9 PSF	46.5 PSF	50.5 PSF	39.9 PSF	50.5 PSF	39.9 PSF	42.1 PSF	33.2 PSF	42.1 PSF	33.2 PSF	33.7 PSF	26.6 PSF	33.7 PSF	26.6 PSF	247.00 LB-FT	147.4 LB	521.4 LB	482.9 LB
36 "			50.6 PSF	39.9 PSF	50.6 PSF	39.9 PSF	43.4 PSF	34.2 PSF	43.4 PSF	34.2 PSF	36.1 PSF	28.5 PSF	36.1 PSF	28.5 PSF	28.9 PSF	22.8 PSF	28.9 PSF	22.8 PSF	247.00 LB-FT	126.6 LB	488.1 LB	476.0 LB
18 "	42 "	6720 in²	67.5 PSF	53.3 PSF	60.2 PSF	47.5 PSF	57.9 PSF	45.7 PSF	51.6 PSF	40.7 PSF	48.2 PSF	38.1 PSF	43.0 PSF	34.0 PSF	38.6 PSF	30.4 PSF	34.5 PSF	27.2 PSF	247.00 LB-FT	225.2 LB	690.6 LB	553.9 LB
24 "			53.2 PSF	42.0 PSF	49.7 PSF	39.3 PSF	45.6 PSF	36.0 PSF	42.6 PSF	33.7 PSF	38.0 PSF	30.0 PSF	35.6 PSF	28.1 PSF	30.4 PSF	24.0 PSF	28.5 PSF	22.5 PSF	247.00 LB-FT	177.4 LB	600.5 LB	524.2 LB
30 "			44.2 PSF	34.9 PSF	44.2 PSF	34.9 PSF	37.9 PSF	29.9 PSF	37.9 PSF	29.9 PSF	31.6 PSF	24.9 PSF	31.6 PSF	24.9 PSF	25.2 PSF	19.9 PSF	25.2 PSF	19.9 PSF	247.00 LB-FT	147.4 LB	545.9 LB	507.5 LB
36 "			37.9 PSF	29.9 PSF	37.9 PSF	29.9 PSF	32.5 PSF	25.7 PSF	32.5 PSF	25.7 PSF	27.1 PSF	21.4 PSF	27.1 PSF	21.4 PSF	21.7 PSF	17.1 PSF	21.7 PSF	17.1 PSF	247.00 LB-FT	126.6 LB	509.2 LB	497.1 LB
18 "	48 "	9216 in²	49.2 PSF	38.9 PSF	43.4 PSF	34.3 PSF	42.2 PSF	33.3 PSF	37.2 PSF	29.4 PSF	35.2 PSF	27.7 PSF	31.1 PSF	24.5 PSF	28.1 PSF	22.2 PSF	24.9 PSF	19.6 PSF	247.00 LB-FT	225.2 LB	728.2 LB	591.5 LB
24 "			38.8 PSF	30.6 PSF	36.0 PSF	28.4 PSF	33.2 PSF	26.2 PSF	30.8 PSF	24.3 PSF	27.7 PSF	21.8 PSF	25.7 PSF	20.3 PSF	22.1 PSF	17.5 PSF	20.6 PSF	16.2 PSF	247.00 LB-FT	177.4 LB	630.1 LB	553.8 LB
30 "			32.2 PSF	25.4 PSF	32.2 PSF	25.4 PSF	27.6 PSF	21.8 PSF	27.6 PSF	21.8 PSF	23.0 PSF	18.1 PSF	23.0 PSF	18.1 PSF					247.00 LB-FT	147.4 LB	570.5 LB	505.1 LB
36 "			27.7 PSF	21.8 PSF	27.7 PSF	21.8 PSF	23.7 PSF	18.7 PSF	23.7 PSF	18.7 PSF									247.00 LB-FT	126.6 LB	530.3 LB	473.2 LB

24" STAND DEPTH: MAX FACE AREA (1656in² - 6912in²), FRAME QUANTITY (3-6 FRAMES)

STAND CLEAR HEIGHT	MAX MEAN UNIT HEIGHT	MAX FACE AREA	UNIT TO FRAME RATIO: MAX FACE AREA : 6 FRAMES, ANCHOR TYPE: 1 OR 4 — MAX ALLOWABLE LATERAL LOAD	MAX ALLOWABLE UPLIFT	ANCHORS TYPE: 2 OR 3 — MAX ALLOWABLE LATERAL LOAD	MAX ALLOWABLE UPLIFT	MAX FACE AREA : 5 FRAMES, ANCHOR TYPE: 1 OR 4 — MAX ALLOWABLE LATERAL LOAD	MAX ALLOWABLE UPLIFT	ANCHORS TYPE: 2 OR 3 — MAX ALLOWABLE LATERAL LOAD	MAX ALLOWABLE UPLIFT	MAX FACE AREA : 4 FRAMES, ANCHOR TYPE: 1 OR 4 — MAX ALLOWABLE LATERAL LOAD	MAX ALLOWABLE UPLIFT	ANCHORS TYPE: 2 OR 3 — MAX ALLOWABLE LATERAL LOAD	MAX ALLOWABLE UPLIFT	MAX FACE AREA : 3 FRAMES, ANCHOR TYPE: 1 OR 4 — MAX ALLOWABLE LATERAL LOAD	MAX ALLOWABLE UPLIFT	ANCHORS TYPE: 2 OR 3 — MAX ALLOWABLE LATERAL LOAD	MAX ALLOWABLE UPLIFT	LOAD TRANSFER INFORMATION FOR USE WITH HOST STRUCTURE VERIFICATION ONLY: MAX. BASE MOMENT (M)	MAX. BASE SHEAR (V)	MAX. BASE UPLIFT (T)	MAX. BASE GRAVITY (C)
18 "	24 "	1656 in²	200.0 PSF	157.8 PSF	200.0 PSF	157.8 PSF	200.0 PSF	157.8 PSF	178.5 PSF	140.9 PSF	167.9 PSF	132.6 PSF	142.9 PSF	112.8 PSF	125.9 PSF	99.4 PSF	107.4 PSF	84.7 PSF	247.00 LB-FT	241.4 LB	837.7 LB	684.6 LB
24 "			198.2 PSF	156.4 PSF	176.5 PSF	139.3 PSF	165.1 PSF	130.4 PSF	147.1 PSF	116.2 PSF	132.1 PSF	104.3 PSF	117.8 PSF	93.0 PSF	99.1 PSF	78.2 PSF	88.5 PSF	69.9 PSF	247.00 LB-FT	189.9 LB	756.1 LB	662.4 LB
30 "			163.3 PSF	128.9 PSF	163.3 PSF	128.9 PSF	136.1 PSF	107.4 PSF	136.1 PSF	107.4 PSF	108.9 PSF	85.9 PSF	108.9 PSF	85.9 PSF	81.6 PSF	64.4 PSF	81.6 PSF	64.4 PSF	245.70 LB-FT	156.5 LB	699.3 LB	647.8 LB
36 "			130.3 PSF	102.8 PSF	130.3 PSF	102.8 PSF	108.5 PSF	85.7 PSF	108.5 PSF	85.7 PSF	86.8 PSF	68.5 PSF	86.8 PSF	68.5 PSF	65.1 PSF	51.4 PSF	65.1 PSF	51.4 PSF	229.00 LB-FT	124.8 LB	618.1 LB	606.6 LB
18 "	30 "	2790 in²	149.5 PSF	118.0 PSF	125.1 PSF	98.7 PSF	124.6 PSF	98.3 PSF	104.3 PSF	82.3 PSF	99.7 PSF	78.7 PSF	83.5 PSF	65.9 PSF	74.7 PSF	59.0 PSF	62.7 PSF	49.5 PSF	247.00 LB-FT	241.4 LB	903.7 LB	745.0 LB
24 "			117.6 PSF	92.8 PSF	103.4 PSF	81.6 PSF	98.0 PSF	77.4 PSF	86.2 PSF	68.1 PSF	78.4 PSF	61.9 PSF	69.0 PSF	54.5 PSF	58.8 PSF	46.4 PSF	51.9 PSF	40.9 PSF	247.00 LB-FT	189.9 LB	803.6 LB	709.9 LB
30 "			96.9 PSF	76.5 PSF	96.9 PSF	76.5 PSF	80.7 PSF	63.7 PSF	80.7 PSF	63.7 PSF	64.6 PSF	51.0 PSF	64.6 PSF	51.0 PSF	48.4 PSF	38.2 PSF	48.4 PSF	38.2 PSF	245.70 LB-FT	156.5 LB	738.5 LB	687.0 LB
36 "			77.3 PSF	61.0 PSF	77.3 PSF	61.0 PSF	64.4 PSF	50.8 PSF	64.4 PSF	50.8 PSF	51.5 PSF	40.7 PSF	51.5 PSF	40.7 PSF	38.6 PSF	30.5 PSF	38.6 PSF	30.5 PSF	229.00 LB-FT	124.8 LB	649.3 LB	637.8 LB
18 "	36 "	3780 in²	110.3 PSF	87.1 PSF	90.9 PSF	71.8 PSF	91.9 PSF	72.6 PSF	75.8 PSF	59.9 PSF	73.5 PSF	58.0 PSF	60.7 PSF	47.9 PSF	55.1 PSF	43.5 PSF	45.6 PSF	36.0 PSF	247.00 LB-FT	241.4 LB	964.1 LB	805.3 LB
24 "			86.8 PSF	68.5 PSF	75.4 PSF	59.5 PSF	72.3 PSF	57.1 PSF	62.8 PSF	49.6 PSF	57.8 PSF	45.7 PSF	50.3 PSF	39.7 PSF	43.4 PSF	34.2 PSF	37.8 PSF	29.8 PSF	247.00 LB-FT	189.9 LB	851.1 LB	757.3 LB
30 "			71.5 PSF	56.4 PSF	71.5 PSF	56.4 PSF	59.6 PSF	47.0 PSF	59.6 PSF	47.0 PSF	47.7 PSF	37.6 PSF	47.7 PSF	37.6 PSF	35.7 PSF	28.2 PSF	35.7 PSF	28.2 PSF	245.70 LB-FT	156.5 LB	777.6 LB	726.1 LB
36 "			57.0 PSF	45.0 PSF	57.0 PSF	45.0 PSF	47.5 PSF	37.5 PSF	47.5 PSF	37.5 PSF	38.0 PSF	30.0 PSF	38.0 PSF	30.0 PSF	28.5 PSF	22.5 PSF	28.5 PSF	22.5 PSF	229.00 LB-FT	124.8 LB	680.5 LB	669.0 LB
18 "	42 "	5040 in²	82.2 PSF	64.9 PSF	67.2 PSF	53.0 PSF	68.6 PSF	54.1 PSF	56.0 PSF	44.2 PSF	54.9 PSF	43.3 PSF	44.9 PSF	35.4 PSF	41.2 PSF	32.5 PSF	33.7 PSF	26.6 PSF	246.30 LB-FT	240.7 LB	1018.2 LB	863.4 LB
24 "			65.1 PSF	51.4 PSF	55.8 PSF	44.1 PSF	54.2 PSF	42.8 PSF	46.5 PSF	36.7 PSF	43.4 PSF	34.2 PSF	37.3 PSF	29.4 PSF	32.5 PSF	25.7 PSF	28.0 PSF	22.1 PSF	247.00 LB-FT	189.9 LB	898.5 LB	804.8 LB
30 "			53.6 PSF	42.3 PSF	53.6 PSF	42.3 PSF	44.7 PSF	35.3 PSF	44.7 PSF	35.3 PSF	35.7 PSF	28.2 PSF	35.7 PSF	28.2 PSF	26.8 PSF	21.1 PSF	26.8 PSF	21.1 PSF	245.70 LB-FT	156.5 LB	816.7 LB	765.2 LB
36 "			42.8 PSF	33.8 PSF	42.8 PSF	33.8 PSF	35.6 PSF	28.1 PSF	35.6 PSF	28.1 PSF	28.5 PSF	22.5 PSF	28.5 PSF	22.5 PSF	21.4 PSF	16.9 PSF	21.4 PSF	16.9 PSF	229.00 LB-FT	124.8 LB	711.7 LB	700.2 LB
18 "	48 "	6912 in²	59.0 PSF	46.6 PSF	48.3 PSF	38.1 PSF	49.2 PSF	38.8 PSF	40.2 PSF	31.8 PSF	39.4 PSF	31.1 PSF	32.2 PSF	25.4 PSF	29.6 PSF	23.3 PSF	24.2 PSF	19.1 PSF	242.50 LB-FT	237.0 LB	1061.6 LB	911.5 LB
24 "			47.4 PSF	37.4 PSF	40.2 PSF	31.7 PSF	39.5 PSF	31.2 PSF	33.5 PSF	26.4 PSF	31.6 PSF	24.9 PSF	26.8 PSF	21.2 PSF	23.7 PSF	18.7 PSF	20.1 PSF	15.9 PSF	247.00 LB-FT	189.9 LB	946.0 LB	852.3 LB
30 "			39.1 PSF	30.8 PSF	39.1 PSF	30.8 PSF	32.6 PSF	25.7 PSF	32.6 PSF	25.7 PSF	26.0 PSF	20.5 PSF	26.0 PSF	20.5 PSF					245.70 LB-FT	156.5 LB	855.9 LB	770.6 LB
36 "			31.2 PSF	24.6 PSF	31.2 PSF	24.6 PSF	26.0 PSF	20.5 PSF	26.0 PSF	20.5 PSF	20.8 PSF	16.4 PSF	20.8 PSF	16.4 PSF					229.00 LB-FT	124.8 LB	743.0 LB	697.7 LB

36" STAND DEPTH: MAX FACE AREA (1656in² - 6912in²), FRAME QUANTITY (3-6 FRAMES)

STAND CLEAR HEIGHT	MAX MEAN UNIT HEIGHT	MAX FACE AREA	UNIT TO FRAME RATIO: MAX FACE AREA : 6 FRAMES, ANCHOR TYPE: 1 OR 4 — MAX ALLOWABLE LATERAL LOAD	MAX ALLOWABLE UPLIFT	ANCHORS TYPE: 2 OR 3 — MAX ALLOWABLE LATERAL LOAD	MAX ALLOWABLE UPLIFT	MAX FACE AREA : 5 FRAMES, ANCHOR TYPE: 1 OR 4 — MAX ALLOWABLE LATERAL LOAD	MAX ALLOWABLE UPLIFT	ANCHORS TYPE: 2 OR 3 — MAX ALLOWABLE LATERAL LOAD	MAX ALLOWABLE UPLIFT	MAX FACE AREA : 4 FRAMES, ANCHOR TYPE: 1 OR 4 — MAX ALLOWABLE LATERAL LOAD	MAX ALLOWABLE UPLIFT	ANCHORS TYPE: 2 OR 3 — MAX ALLOWABLE LATERAL LOAD	MAX ALLOWABLE UPLIFT	MAX FACE AREA : 3 FRAMES, ANCHOR TYPE: 1 OR 4 — MAX ALLOWABLE LATERAL LOAD	MAX ALLOWABLE UPLIFT	ANCHORS TYPE: 2 OR 3 — MAX ALLOWABLE LATERAL LOAD	MAX ALLOWABLE UPLIFT	LOAD TRANSFER INFORMATION FOR USE WITH HOST STRUCTURE VERIFICATION ONLY: MAX. BASE MOMENT (M)	MAX. BASE SHEAR (V)	MAX. BASE UPLIFT (T)	MAX. BASE GRAVITY (C)
18 "	24 "	1656 in²	200.0 PSF	157.8 PSF	200.0 PSF	157.8 PSF	195.9 PSF	154.6 PSF	179.9 PSF	142.1 PSF	156.7 PSF	123.7 PSF	144.1 PSF	113.7 PSF	117.5 PSF	92.7 PSF	108.2 PSF	85.4 PSF	247.00 LB-FT	225.2 LB	577.3 LB	441.3 LB
24 "			185.2 PSF	146.2 PSF	177.4 PSF	140.1 PSF	154.3 PSF	121.8 PSF	148.0 PSF	116.8 PSF	123.4 PSF	97.4 PSF	118.5 PSF	93.5 PSF	92.6 PSF	73.1 PSF	89.0 PSF	70.2 PSF	247.00 LB-FT	177.4 LB	513.4 LB	435.4 LB
30 "			153.8 PSF	121.4 PSF	153.8 PSF	121.4 PSF	128.2 PSF	101.2 PSF	128.2 PSF	101.2 PSF	102.5 PSF	80.9 PSF	102.5 PSF	80.9 PSF	76.9 PSF	60.7 PSF	76.9 PSF	60.7 PSF	247.00 LB-FT	147.4 LB	473.8 LB	433.8 LB
36 "			132.1 PSF	104.3 PSF	132.1 PSF	104.3 PSF	110.1 PSF	86.9 PSF	110.1 PSF	86.9 PSF	88.1 PSF	69.5 PSF	88.1 PSF	69.5 PSF	66.0 PSF	52.1 PSF	66.0 PSF	52.1 PSF	247.00 LB-FT	126.6 LB	447.5 LB	433.8 LB
18 "	30 "	2790 in²	139.5 PSF	110.1 PSF	126.8 PSF	100.1 PSF	116.2 PSF	91.7 PSF	105.7 PSF	83.4 PSF	93.0 PSF	73.4 PSF	84.6 PSF	66.8 PSF	69.7 PSF	55.0 PSF	63.6 PSF	50.2 PSF	247.00 LB-FT	225.2 LB	617.1 LB	478.8 LB
24 "			109.9 PSF	86.7 PSF	104.4 PSF	82.4 PSF	91.6 PSF	72.3 PSF	87.1 PSF	68.7 PSF	73.2 PSF	57.8 PSF	69.7 PSF	55.0 PSF	54.9 PSF	43.3 PSF	52.4 PSF	41.3 PSF	247.00 LB-FT	177.4 LB	543.0 LB	465.0 LB
30 "			91.3 PSF	72.1 PSF	91.3 PSF	72.1 PSF	76.1 PSF	60.0 PSF	76.1 PSF	60.0 PSF	60.8 PSF	48.0 PSF	60.8 PSF	48.0 PSF	45.6 PSF	36.0 PSF	45.6 PSF	36.0 PSF	247.00 LB-FT	147.4 LB	498.4 LB	458.4 LB
36 "			78.4 PSF	61.9 PSF	78.4 PSF	61.9 PSF	65.3 PSF	51.6 PSF	65.3 PSF	51.6 PSF	52.2 PSF	41.2 PSF	52.2 PSF	41.2 PSF	39.2 PSF	30.9 PSF	39.2 PSF	30.9 PSF	247.00 LB-FT	126.6 LB	468.6 LB	454.9 LB
18 "	36 "	3780 in²	102.9 PSF	81.3 PSF	92.6 PSF	73.1 PSF	85.8 PSF	67.7 PSF	77.2 PSF	60.9 PSF	68.6 PSF	54.2 PSF	61.8 PSF	48.8 PSF	51.4 PSF	40.6 PSF	46.4 PSF	36.6 PSF	247.00 LB-FT	225.2 LB	654.7 LB	516.4 LB
24 "			81.1 PSF	64.0 PSF	76.4 PSF	60.3 PSF	67.6 PSF	53.3 PSF	63.7 PSF	50.3 PSF	54.0 PSF	42.7 PSF	51.0 PSF	40.3 PSF	40.5 PSF	32.0 PSF	38.3 PSF	30.2 PSF	247.00 LB-FT	177.4 LB	572.6 LB	494.6 LB
30 "			67.4 PSF	53.2 PSF	67.4 PSF	53.2 PSF	56.1 PSF	44.3 PSF	56.1 PSF	44.3 PSF	44.9 PSF	35.4 PSF	44.9 PSF	35.4 PSF	33.7 PSF	26.6 PSF	33.7 PSF	26.6 PSF	247.00 LB-FT	147.4 LB	523.0 LB	482.9 LB
36 "			57.8 PSF	45.7 PSF	57.8 PSF	45.7 PSF	48.2 PSF	38.0 PSF	48.2 PSF	38.0 PSF	38.5 PSF	30.4 PSF	38.5 PSF	30.4 PSF	28.9 PSF	22.8 PSF	28.9 PSF	22.8 PSF	247.00 LB-FT	126.6 LB	489.7 LB	476.0 LB
18 "	42 "	5040 in²	77.2 PSF	60.9 PSF	68.7 PSF	54.3 PSF	64.3 PSF	50.8 PSF	57.3 PSF	45.2 PSF	51.4 PSF	40.6 PSF	45.9 PSF	36.2 PSF	38.6 PSF	30.4 PSF	34.5 PSF	27.2 PSF	247.00 LB-FT	225.2 LB	692.2 LB	553.9 LB
24 "			60.8 PSF	48.0 PSF	56.8 PSF	44.8 PSF	50.7 PSF	40.0 PSF	47.4 PSF	37.4 PSF	40.5 PSF	32.0 PSF	37.9 PSF	29.9 PSF	30.4 PSF	24.0 PSF	28.5 PSF	22.5 PSF	247.00 LB-FT	177.4 LB	602.1 LB	524.2 LB
30 "			50.5 PSF	39.9 PSF	50.5 PSF	39.9 PSF	42.1 PSF	33.2 PSF	42.1 PSF	33.2 PSF	33.7 PSF	26.6 PSF	33.7 PSF	26.6 PSF	25.2 PSF	19.9 PSF	25.2 PSF	19.9 PSF	247.00 LB-FT	147.4 LB	547.6 LB	507.5 LB
36 "			43.4 PSF	34.2 PSF	43.4 PSF	34.2 PSF	36.1 PSF	28.5 PSF	36.1 PSF	28.5 PSF	28.9 PSF	22.8 PSF	28.9 PSF	22.8 PSF	21.7 PSF	17.1 PSF	21.7 PSF	17.1 PSF	247.00 LB-FT	126.6 LB	510.8 LB	497.1 LB
18 "	48 "	6912 in²	56.3 PSF	44.4 PSF	49.6 PSF	39.2 PSF	46.9 PSF	37.0 PSF	41.4 PSF	32.6 PSF	37.5 PSF	29.6 PSF	33.1 PSF	26.1 PSF	28.1 PSF	22.2 PSF	24.9 PSF	19.6 PSF	247.00 LB-FT	225.2 LB	729.8 LB	591.5 LB
24 "			44.3 PSF	35.0 PSF	41.1 PSF	32.4 PSF	36.9 PSF	29.1 PSF	34.2 PSF	27.0 PSF	29.5 PSF	23.3 PSF	27.4 PSF	21.6 PSF	22.1 PSF	17.5 PSF	20.6 PSF	16.2 PSF	247.00 LB-FT	177.4 LB	631.7 LB	553.8 LB
30 "			36.8 PSF	29.1 PSF	36.8 PSF	29.1 PSF	30.7 PSF	24.2 PSF	30.7 PSF	24.2 PSF	24.5 PSF	19.4 PSF	24.5 PSF	19.4 PSF					247.00 LB-FT	147.4 LB	572.1 LB	498.4 LB
36 "			31.6 PSF	24.9 PSF	31.6 PSF	24.9 PSF	26.3 PSF	20.8 PSF	26.3 PSF	20.8 PSF	21.1 PSF	16.6 PSF	21.1 PSF	16.6 PSF					247.00 LB-FT	126.6 LB	531.9 LB	484.5 LB

FL 16921.1

ENGINEERING EXPRESS®
POSTAL ADDRESS:
2234 NORTH FEDERAL HWY #7664
BOCA RATON, FL 33431
ENGINEERINGEXPRESS.COM

PRECISION ALUMINUM PRODUCTS, INC.
1339 SW 1ST WAY
DEERFIELD BEACH, FL 33441
(954) 480-6919

ALUMINUM A/C STANDS
FLORIDA BUILDING CODE EIGHTH EDITION (2023)
FLORIDA STATEWIDE APPROVAL (FSA FL#16921.1)

REMARKS	DRWN	CHKD	DATE
PREV SUBMITTAL (20-32768)	CSL	RWN	12/15/20
2023 FBC UPDATE & TECH. CHANGES	MRT	RWN	12/08/23

COPYRIGHT ENGINEERING EXPRESS®

23-69401

SCALE: NTS UNLESS NOTED

12/21/2023 1:55 PM MILTON c:\users\milton\engineering express\production - documents\projects\23-\23-69401 2023 product fbc update fl16921\work\2023 fbc\drawings & cad\23-69401c - fl16921.1 - cad.dwg

"HD" STAND DESIGN SCHEDULE CONTINUED

DESIGN SCHEDULES NOTES:

1. DESIGN SCHEDULES SHOWN HEREIN ARE REFERENCED TO ALLOWABLE STRENGTH DESIGN (ASD) METHODOLOGY.
2. EMPTY CELLS DENOTES CONDITIONS NOT ALLOWED TO USE.
3. MAXIMUM CALCULATED FACE AREA SHALL BE EQUAL TO OR LESS THAN THE MAXIMUM ALLOWABLE FACE AREA FOR EACH CONFIGURATION.
4. REFERENCE ANCHOR SCHEDULE FOR ANCHOR TYPES LISTED HEREIN.

FRANK BENNARDO, P.E.
PE# 0046549 CA# 9885

FRANK L. BENNARDO LICENSE No PE0046549 STATE OF FLORIDA PROFESSIONAL ENGINEER
12/28/2023

DECEMBER 21, 2023

FL

24" STAND DEPTH: MAX FACE AREA (1104in² - 4608in²), FRAME QUANTITY (2-5 FRAMES)

STAND CLEAR HEIGHT	MAX MEAN UNIT HEIGHT	MAX FACE AREA	UNIT TO FRAME RATIO: MAX FACE AREA : 5 FRAMES — ANCHOR TYPE: 1 OR 4 — MAX ALLOWABLE LATERAL LOAD	MAX ALLOWABLE UPLIFT	ANCHORS TYPE: 2 OR 3 — MAX ALLOWABLE LATERAL LOAD	MAX ALLOWABLE UPLIFT	MAX FACE AREA : 4 FRAMES — ANCHOR TYPE: 1 OR 4 — MAX ALLOWABLE LATERAL LOAD	MAX ALLOWABLE UPLIFT	ANCHORS TYPE: 2 OR 3 — MAX ALLOWABLE LATERAL LOAD	MAX ALLOWABLE UPLIFT	MAX FACE AREA : 3 FRAMES — ANCHOR TYPE: 1 OR 4 — MAX ALLOWABLE LATERAL LOAD	MAX ALLOWABLE UPLIFT	ANCHORS TYPE: 2 OR 3 — MAX ALLOWABLE LATERAL LOAD	MAX ALLOWABLE UPLIFT	MAX FACE AREA : 2 FRAMES — ANCHOR TYPE: 1 OR 4 — MAX ALLOWABLE LATERAL LOAD	MAX ALLOWABLE UPLIFT	ANCHORS TYPE: 2 OR 3 — MAX ALLOWABLE LATERAL LOAD	MAX ALLOWABLE UPLIFT	LOAD TRANSFER INFORMATION FOR USE WITH HOST STRUCTURE VERIFICATION ONLY — MAX. BASE MOMENT (M)	MAX. BASE SHEAR (V)	MAX. BASE UPLIFT (T)	MAX. BASE GRAVITY (C)
18 "	24 "	1104 in²	200.0 PSF	157.8 PSF	200.0 PSF	157.8 PSF	200.0 PSF	157.8 PSF	200.0 PSF	157.8 PSF	188.9 PSF	149.1 PSF	160.7 PSF	126.9 PSF	125.9 PSF	99.4 PSF	107.4 PSF	84.7 PSF	247.00 LB-FT	241.4 LB	839.6 LB	684.6 LB
24 "			200.0 PSF	157.8 PSF	200.0 PSF	157.8 PSF	198.2 PSF	156.4 PSF	176.5 PSF	139.3 PSF	148.6 PSF	117.3 PSF	132.5 PSF	104.6 PSF	99.1 PSF	78.2 PSF	88.5 PSF	69.9 PSF	247.00 LB-FT	189.9 LB	756.1 LB	662.4 LB
30 "			200.0 PSF	157.8 PSF	200.0 PSF	157.8 PSF	163.3 PSF	128.9 PSF	163.3 PSF	128.9 PSF	122.5 PSF	96.7 PSF	122.5 PSF	96.7 PSF	81.6 PSF	64.4 PSF	81.6 PSF	64.4 PSF	245.70 LB-FT	156.5 LB	699.3 LB	647.8 LB
36 "			162.8 PSF	128.6 PSF	162.8 PSF	128.6 PSF	130.3 PSF	102.8 PSF	130.3 PSF	102.8 PSF	97.7 PSF	77.1 PSF	97.7 PSF	77.1 PSF	65.1 PSF	51.4 PSF	65.1 PSF	51.4 PSF	229.00 LB-FT	124.8 LB	620.3 LB	606.6 LB
18 "	30 "	1860 in²	186.9 PSF	147.5 PSF	156.3 PSF	123.4 PSF	149.5 PSF	118.0 PSF	125.1 PSF	98.7 PSF	112.1 PSF	88.5 PSF	93.9 PSF	74.1 PSF	74.7 PSF	59.0 PSF	62.7 PSF	49.5 PSF	247.00 LB-FT	241.4 LB	906.0 LB	745.0 LB
24 "			147.0 PSF	116.1 PSF	129.2 PSF	102.0 PSF	117.6 PSF	92.8 PSF	103.4 PSF	81.6 PSF	88.2 PSF	69.6 PSF	77.6 PSF	61.3 PSF	58.8 PSF	46.4 PSF	51.9 PSF	40.9 PSF	247.00 LB-FT	189.9 LB	805.8 LB	709.9 LB
30 "			121.1 PSF	95.6 PSF	121.1 PSF	95.6 PSF	96.9 PSF	76.5 PSF	96.9 PSF	76.5 PSF	72.7 PSF	57.4 PSF	72.7 PSF	57.4 PSF	48.4 PSF	38.2 PSF	48.4 PSF	38.2 PSF	245.70 LB-FT	156.5 LB	740.7 LB	687.0 LB
36 "			96.6 PSF	76.3 PSF	96.6 PSF	76.3 PSF	77.3 PSF	61.0 PSF	77.3 PSF	61.0 PSF	58.0 PSF	45.7 PSF	58.0 PSF	45.7 PSF	38.6 PSF	30.5 PSF	38.6 PSF	30.5 PSF	229.00 LB-FT	124.8 LB	651.5 LB	637.8 LB
18 "	36 "	2520 in²	137.9 PSF	108.9 PSF	113.6 PSF	89.7 PSF	110.3 PSF	87.1 PSF	90.9 PSF	71.8 PSF	82.7 PSF	65.3 PSF	68.3 PSF	53.9 PSF	55.1 PSF	43.5 PSF	45.6 PSF	36.0 PSF	247.00 LB-FT	241.4 LB	966.3 LB	805.3 LB
24 "			108.5 PSF	85.6 PSF	94.2 PSF	74.3 PSF	86.8 PSF	68.5 PSF	75.4 PSF	59.5 PSF	65.1 PSF	51.4 PSF	56.6 PSF	44.7 PSF	43.4 PSF	34.2 PSF	37.8 PSF	29.8 PSF	247.00 LB-FT	189.9 LB	853.3 LB	757.3 LB
30 "			89.4 PSF	70.6 PSF	89.4 PSF	70.6 PSF	71.5 PSF	56.4 PSF	71.5 PSF	56.4 PSF	53.6 PSF	42.3 PSF	53.6 PSF	42.3 PSF	35.7 PSF	28.2 PSF	35.7 PSF	28.2 PSF	245.70 LB-FT	156.5 LB	779.9 LB	726.1 LB
36 "			71.3 PSF	56.3 PSF	71.3 PSF	56.3 PSF	57.0 PSF	45.0 PSF	57.0 PSF	45.0 PSF	42.8 PSF	33.8 PSF	42.8 PSF	33.8 PSF	28.5 PSF	22.5 PSF	28.5 PSF	22.5 PSF	229.00 LB-FT	124.8 LB	682.8 LB	669.0 LB
18 "	42 "	3360 in²	102.8 PSF	81.1 PSF	83.9 PSF	66.3 PSF	82.2 PSF	64.9 PSF	67.2 PSF	53.0 PSF	61.7 PSF	48.7 PSF	50.4 PSF	39.8 PSF	41.2 PSF	32.5 PSF	33.7 PSF	26.6 PSF	246.30 LB-FT	240.7 LB	1019.9 LB	863.4 LB
24 "			81.4 PSF	64.2 PSF	69.7 PSF	55.0 PSF	65.1 PSF	51.4 PSF	55.8 PSF	44.1 PSF	48.8 PSF	38.5 PSF	41.9 PSF	33.1 PSF	32.5 PSF	25.7 PSF	28.0 PSF	22.1 PSF	247.00 LB-FT	189.9 LB	900.8 LB	804.8 LB
30 "			67.0 PSF	52.9 PSF	67.0 PSF	52.9 PSF	53.6 PSF	42.3 PSF	53.6 PSF	42.3 PSF	40.2 PSF	31.7 PSF	40.2 PSF	31.7 PSF	26.8 PSF	21.1 PSF	26.8 PSF	21.1 PSF	245.70 LB-FT	156.5 LB	819.0 LB	765.2 LB
36 "			53.5 PSF	42.2 PSF	53.5 PSF	42.2 PSF	42.8 PSF	33.8 PSF	42.8 PSF	33.8 PSF	32.1 PSF	25.3 PSF	32.1 PSF	25.3 PSF	21.4 PSF	16.9 PSF	21.4 PSF	16.9 PSF	229.00 LB-FT	124.8 LB	714.0 LB	700.2 LB
18 "	48 "	4608 in²	73.8 PSF	58.2 PSF	60.3 PSF	47.6 PSF	59.0 PSF	46.6 PSF	48.3 PSF	38.1 PSF	44.3 PSF	35.0 PSF	36.2 PSF	28.6 PSF	29.6 PSF	23.3 PSF	24.2 PSF	19.1 PSF	242.50 LB-FT	237.0 LB	1063.2 LB	911.5 LB
24 "			59.3 PSF	46.8 PSF	50.2 PSF	39.6 PSF	47.4 PSF	37.4 PSF	40.2 PSF	31.7 PSF	35.6 PSF	28.1 PSF	30.2 PSF	23.8 PSF	23.7 PSF	18.7 PSF	20.1 PSF	15.9 PSF	247.00 LB-FT	189.9 LB	948.3 LB	852.3 LB
30 "			48.9 PSF	38.6 PSF	48.9 PSF	38.6 PSF	39.1 PSF	30.8 PSF	39.1 PSF	30.8 PSF	29.3 PSF	23.1 PSF	29.3 PSF	23.1 PSF					245.70 LB-FT	156.5 LB	858.1 LB	759.4 LB
36 "			39.0 PSF	30.8 PSF	39.0 PSF	30.8 PSF	31.2 PSF	24.6 PSF	31.2 PSF	24.6 PSF	23.4 PSF	18.4 PSF	23.4 PSF	18.4 PSF					229.00 LB-FT	124.8 LB	745.2 LB	686.5 LB

36" STAND DEPTH: MAX FACE AREA (1104in² - 4608in²), FRAME QUANTITY (2-5 FRAMES)

STAND CLEAR HEIGHT	MAX MEAN UNIT HEIGHT	MAX FACE AREA	UNIT TO FRAME RATIO: MAX FACE AREA : 5 FRAMES — ANCHOR TYPE: 1 OR 4 — MAX ALLOWABLE LATERAL LOAD	MAX ALLOWABLE UPLIFT	ANCHORS TYPE: 2 OR 3 — MAX ALLOWABLE LATERAL LOAD	MAX ALLOWABLE UPLIFT	MAX FACE AREA : 4 FRAMES — ANCHOR TYPE: 1 OR 4 — MAX ALLOWABLE LATERAL LOAD	MAX ALLOWABLE UPLIFT	ANCHORS TYPE: 2 OR 3 — MAX ALLOWABLE LATERAL LOAD	MAX ALLOWABLE UPLIFT	MAX FACE AREA : 3 FRAMES — ANCHOR TYPE: 1 OR 4 — MAX ALLOWABLE LATERAL LOAD	MAX ALLOWABLE UPLIFT	ANCHORS TYPE: 2 OR 3 — MAX ALLOWABLE LATERAL LOAD	MAX ALLOWABLE UPLIFT	MAX FACE AREA : 2 FRAMES — ANCHOR TYPE: 1 OR 4 — MAX ALLOWABLE LATERAL LOAD	MAX ALLOWABLE UPLIFT	ANCHORS TYPE: 2 OR 3 — MAX ALLOWABLE LATERAL LOAD	MAX ALLOWABLE UPLIFT	LOAD TRANSFER INFORMATION FOR USE WITH HOST STRUCTURE VERIFICATION ONLY — MAX. BASE MOMENT (M)	MAX. BASE SHEAR (V)	MAX. BASE UPLIFT (T)	MAX. BASE GRAVITY (C)
18 "	24 "	1104 in²	200.0 PSF	157.8 PSF	200.0 PSF	157.8 PSF	200.0 PSF	157.8 PSF	200.0 PSF	157.8 PSF	176.3 PSF	139.1 PSF	162.0 PSF	127.9 PSF	117.5 PSF	92.7 PSF	108.2 PSF	85.4 PSF	247.00 LB-FT	225.2 LB	575.8 LB	441.3 LB
24 "			200.0 PSF	157.8 PSF	200.0 PSF	157.8 PSF	185.2 PSF	146.2 PSF	177.4 PSF	140.1 PSF	138.9 PSF	109.6 PSF	133.2 PSF	105.2 PSF	92.6 PSF	73.1 PSF	89.0 PSF	70.2 PSF	247.00 LB-FT	177.4 LB	513.4 LB	435.4 LB
30 "			192.3 PSF	151.8 PSF	192.3 PSF	151.8 PSF	153.8 PSF	121.4 PSF	153.8 PSF	121.4 PSF	115.4 PSF	91.1 PSF	115.4 PSF	91.1 PSF	76.9 PSF	60.7 PSF	76.9 PSF	60.7 PSF	247.00 LB-FT	147.4 LB	476.1 LB	433.8 LB
36 "			165.1 PSF	130.4 PSF	165.1 PSF	130.4 PSF	132.1 PSF	104.3 PSF	132.1 PSF	104.3 PSF	99.1 PSF	78.2 PSF	99.1 PSF	78.2 PSF	66.0 PSF	52.1 PSF	66.0 PSF	52.1 PSF	247.00 LB-FT	126.6 LB	449.8 LB	433.8 LB
18 "	30 "	1860 in²	174.4 PSF	137.6 PSF	158.3 PSF	125.0 PSF	139.5 PSF	110.1 PSF	126.8 PSF	100.1 PSF	104.6 PSF	82.6 PSF	95.2 PSF	75.1 PSF	69.7 PSF	55.0 PSF	63.6 PSF	50.2 PSF	247.00 LB-FT	225.2 LB	619.4 LB	478.8 LB
24 "			137.4 PSF	108.4 PSF	130.4 PSF	103.0 PSF	109.9 PSF	86.7 PSF	104.4 PSF	82.4 PSF	82.4 PSF	65.0 PSF	78.4 PSF	61.9 PSF	54.9 PSF	43.3 PSF	52.4 PSF	41.3 PSF	247.00 LB-FT	177.4 LB	545.2 LB	465.0 LB
30 "			114.1 PSF	90.1 PSF	114.1 PSF	90.1 PSF	91.3 PSF	72.1 PSF	91.3 PSF	72.1 PSF	68.5 PSF	54.0 PSF	68.5 PSF	54.0 PSF	45.6 PSF	36.0 PSF	45.6 PSF	36.0 PSF	247.00 LB-FT	147.4 LB	500.6 LB	458.4 LB
36 "			98.0 PSF	77.4 PSF	98.0 PSF	77.4 PSF	78.4 PSF	61.9 PSF	78.4 PSF	61.9 PSF	58.8 PSF	46.4 PSF	58.8 PSF	46.4 PSF	39.2 PSF	30.9 PSF	39.2 PSF	30.9 PSF	247.00 LB-FT	126.6 LB	470.9 LB	454.9 LB
18 "	36 "	2520 in²	128.7 PSF	101.6 PSF	115.7 PSF	91.3 PSF	102.9 PSF	81.3 PSF	92.6 PSF	73.1 PSF	77.2 PSF	60.9 PSF	69.5 PSF	54.9 PSF	51.4 PSF	40.6 PSF	46.4 PSF	36.6 PSF	247.00 LB-FT	225.2 LB	656.9 LB	516.4 LB
24 "			101.4 PSF	80.0 PSF	95.5 PSF	75.4 PSF	81.1 PSF	64.0 PSF	76.4 PSF	60.3 PSF	60.8 PSF	48.0 PSF	57.4 PSF	45.3 PSF	40.5 PSF	32.0 PSF	38.3 PSF	30.2 PSF	247.00 LB-FT	177.4 LB	574.8 LB	494.6 LB
30 "			84.2 PSF	66.5 PSF	84.2 PSF	66.5 PSF	67.4 PSF	53.2 PSF	67.4 PSF	53.2 PSF	50.5 PSF	39.9 PSF	50.5 PSF	39.9 PSF	33.7 PSF	26.6 PSF	33.7 PSF	26.6 PSF	247.00 LB-FT	147.4 LB	525.2 LB	482.9 LB
36 "			72.3 PSF	57.1 PSF	72.3 PSF	57.1 PSF	57.8 PSF	45.7 PSF	57.8 PSF	45.7 PSF	43.4 PSF	34.2 PSF	43.4 PSF	34.2 PSF	28.9 PSF	22.8 PSF	28.9 PSF	22.8 PSF	247.00 LB-FT	126.6 LB	492.0 LB	476.0 LB
18 "	42 "	3360 in²	96.5 PSF	76.2 PSF	85.9 PSF	67.8 PSF	77.2 PSF	60.9 PSF	68.7 PSF	54.3 PSF	57.9 PSF	45.7 PSF	51.6 PSF	40.7 PSF	38.6 PSF	30.4 PSF	34.5 PSF	27.2 PSF	247.00 LB-FT	225.2 LB	694.5 LB	553.9 LB
24 "			76.0 PSF	60.0 PSF	71.0 PSF	56.0 PSF	60.8 PSF	48.0 PSF	56.8 PSF	44.8 PSF	45.6 PSF	36.0 PSF	42.6 PSF	33.7 PSF	30.4 PSF	24.0 PSF	28.5 PSF	22.5 PSF	247.00 LB-FT	177.4 LB	604.4 LB	524.2 LB
30 "			63.2 PSF	49.8 PSF	63.2 PSF	49.8 PSF	50.5 PSF	39.9 PSF	50.5 PSF	39.9 PSF	37.9 PSF	29.9 PSF	37.9 PSF	29.9 PSF	25.2 PSF	19.9 PSF	25.2 PSF	19.9 PSF	247.00 LB-FT	147.4 LB	549.8 LB	507.5 LB
36 "			54.2 PSF	42.8 PSF	54.2 PSF	42.8 PSF	43.4 PSF	34.2 PSF	43.4 PSF	34.2 PSF	32.5 PSF	25.7 PSF	32.5 PSF	25.7 PSF	21.7 PSF	17.1 PSF	21.7 PSF	17.1 PSF	247.00 LB-FT	126.6 LB	513.1 LB	497.1 LB
18 "	48 "	4608 in²	70.4 PSF	55.5 PSF	62.0 PSF	48.9 PSF	56.3 PSF	44.4 PSF	49.6 PSF	39.2 PSF	42.2 PSF	33.3 PSF	37.2 PSF	29.4 PSF	28.1 PSF	22.2 PSF	24.9 PSF	19.6 PSF	247.00 LB-FT	225.2 LB	732.0 LB	591.5 LB
24 "			55.4 PSF	43.7 PSF	51.3 PSF	40.5 PSF	44.3 PSF	35.0 PSF	41.1 PSF	32.4 PSF	33.2 PSF	26.2 PSF	30.8 PSF	24.3 PSF	22.1 PSF	17.5 PSF	20.6 PSF	16.2 PSF	247.00 LB-FT	177.4 LB	634.0 LB	553.8 LB
30 "			46.0 PSF	36.3 PSF	46.0 PSF	36.3 PSF	36.8 PSF	29.1 PSF	36.8 PSF	29.1 PSF	27.6 PSF	21.8 PSF	27.6 PSF	21.8 PSF					247.00 LB-FT	147.4 LB	574.4 LB	487.1 LB
36 "			39.5 PSF	31.2 PSF	39.5 PSF	31.2 PSF	31.6 PSF	24.9 PSF	31.6 PSF	24.9 PSF	23.7 PSF	18.7 PSF	23.7 PSF	18.7 PSF					247.00 LB-FT	126.6 LB	534.2 LB	473.2 LB

24" STAND DEPTH: MAX FACE AREA (552in² - 2304in²), FRAME QUANTITY (2-3 FRAMES)

STAND CLEAR HEIGHT	MAX MEAN UNIT HEIGHT	MAX FACE AREA	UNIT TO FRAME RATIO: MAX FACE AREA : 3 FRAMES — ANCHOR TYPE: 1 OR 4 — MAX ALLOWABLE LATERAL LOAD	MAX ALLOWABLE UPLIFT	ANCHOR TYPE: 2 OR 3 — MAX ALLOWABLE LATERAL LOAD	MAX ALLOWABLE UPLIFT	MAX FACE AREA : 2 FRAMES — ANCHOR TYPE: 1 OR 4 — MAX ALLOWABLE LATERAL LOAD	MAX ALLOWABLE UPLIFT	ANCHOR TYPE: 2 OR 3 — MAX ALLOWABLE LATERAL LOAD	MAX ALLOWABLE UPLIFT	LOAD TRANSFER INFORMATION FOR USE WITH HOST STRUCTURE VERIFICATION ONLY — MAX. BASE MOMENT (M)	MAX. BASE SHEAR (V)	MAX. BASE UPLIFT (T)	MAX. BASE GRAVITY (C)
18 "	24 "	552 in²	200.0 PSF	157.8 PSF	200.0 PSF	157.8 PSF	200.0 PSF	157.8 PSF	200.0 PSF	157.8 PSF	196.10 LB-FT	191.6 LB	667.1 LB	503.7 LB
24 "			200.0 PSF	157.8 PSF	200.0 PSF	157.8 PSF	198.2 PSF	156.4 PSF	176.5 PSF	139.3 PSF	247.00 LB-FT	189.9 LB	756.1 LB	594.9 LB
30 "			200.0 PSF	157.8 PSF	200.0 PSF	157.8 PSF	163.3 PSF	128.9 PSF	163.3 PSF	128.9 PSF	245.70 LB-FT	156.5 LB	699.3 LB	580.3 LB
36 "			195.4 PSF	154.3 PSF	195.4 PSF	154.3 PSF	130.3 PSF	102.8 PSF	130.3 PSF	102.8 PSF	229.00 LB-FT	124.8 LB	621.8 LB	539.1 LB
18 "	30 "	930 in²	200.0 PSF	157.8 PSF	187.5 PSF	148.0 PSF	149.5 PSF	118.0 PSF	125.1 PSF	98.7 PSF	247.00 LB-FT	241.4 LB	903.7 LB	677.5 LB
24 "			176.4 PSF	139.3 PSF	155.0 PSF	122.3 PSF	117.6 PSF	92.8 PSF	103.4 PSF	81.6 PSF	247.00 LB-FT	189.9 LB	807.3 LB	642.4 LB
30 "			145.4 PSF	114.8 PSF	145.4 PSF	114.8 PSF	96.9 PSF	76.5 PSF	96.9 PSF	76.5 PSF	245.70 LB-FT	156.5 LB	742.2 LB	619.5 LB
36 "			116.0 PSF	91.5 PSF	116.0 PSF	91.5 PSF	77.3 PSF	61.0 PSF	77.3 PSF	61.0 PSF	229.00 LB-FT	124.8 LB	653.0 LB	570.3 LB
18 "	36 "	1260 in²	165.5 PSF	130.7 PSF	136.3 PSF	107.6 PSF	110.3 PSF	87.1 PSF	90.9 PSF	71.8 PSF	247.00 LB-FT	241.4 LB	967.8 LB	737.8 LB
24 "			130.2 PSF	102.8 PSF	112.9 PSF	89.2 PSF	86.8 PSF	68.5 PSF	75.4 PSF	59.5 PSF	247.00 LB-FT	189.9 LB	854.8 LB	689.8 LB
30 "			107.3 PSF	84.7 PSF	107.3 PSF	84.7 PSF	71.5 PSF	56.4 PSF	71.5 PSF	56.4 PSF	245.70 LB-FT	156.5 LB	781.4 LB	658.6 LB
36 "			85.6 PSF	67.6 PSF	85.6 PSF	67.6 PSF	57.0 PSF	45.0 PSF	57.0 PSF	45.0 PSF	229.00 LB-FT	124.8 LB	684.3 LB	601.5 LB
18 "	42 "	1680 in²	123.3 PSF	97.3 PSF	100.7 PSF	79.5 PSF	82.2 PSF	64.9 PSF	67.2 PSF	53.0 PSF	245.60 LB-FT	240.0 LB	1021.0 LB	793.8 LB
24 "			97.6 PSF	77.1 PSF	83.7 PSF	66.0 PSF	65.1 PSF	51.4 PSF	55.8 PSF	44.1 PSF	247.00 LB-FT	189.9 LB	902.3 LB	737.3 LB
30 "			80.5 PSF	63.5 PSF	80.5 PSF	63.5 PSF	53.6 PSF	42.3 PSF	53.6 PSF	42.3 PSF	245.70 LB-FT	156.5 LB	820.5 LB	697.8 LB
36 "			64.2 PSF	50.7 PSF	64.2 PSF	50.7 PSF	42.8 PSF	33.8 PSF	42.8 PSF	33.8 PSF	229.00 LB-FT	124.8 LB	715.5 LB	632.7 LB
18 "	48 "	2304 in²	88.5 PSF	69.9 PSF	72.3 PSF	57.1 PSF	59.0 PSF	46.6 PSF	48.3 PSF	38.1 PSF	241.80 LB-FT	236.3 LB	1064.3 LB	841.8 LB
24 "			71.2 PSF	56.2 PSF	60.3 PSF	47.6 PSF	47.4 PSF	37.4 PSF	40.2 PSF	31.7 PSF	247.00 LB-FT	189.9 LB	949.8 LB	784.8 LB
30 "			58.7 PSF	46.3 PSF	58.7 PSF	46.3 PSF	39.1 PSF	30.8 PSF	39.1 PSF	30.8 PSF	245.70 LB-FT	156.5 LB	859.6 LB	736.9 LB
36 "			46.8 PSF	36.9 PSF	46.8 PSF	36.9 PSF	31.2 PSF	24.6 PSF	31.2 PSF	24.6 PSF	229.00 LB-FT	124.8 LB	746.7 LB	664.0 LB

FL 16921.1

ENGINEERING EXPRESS®
POSTAL ADDRESS:
2234 NORTH FEDERAL HWY #7664
BOCA RATON, FL 33431
ENGINEERINGEXPRESS.COM

PRECISION ALUMINUM PRODUCTS, INC.
1339 SW 1ST WAY
DEERFIELD BEACH, FL 33441
(954) 480-6919

ALUMINUM A/C STANDS
FLORIDA BUILDING CODE EIGHTH EDITION (2023)
FLORIDA STATEWIDE APPROVAL (FSA FL#16921.1)

REMARKS	DRWN	CHKD	DATE
PREV. SUBMITTAL (20-32768)	CSL	RWN	12/15/20
2023 FBC UPDATE & TECH. CHANGES	MRT	RWN	12/08/23

COPYRIGHT ENGINEERING EXPRESS®

23-69401

SCALE: NTS UNLESS NOTED

12/21/2023 1:55 PM MILTON c:\users\milton\engineering express\production - documents\projects\23-\23-69401 2023 product fbc update fl16921\work\2023 fbc\drawings & cad\23-69401c - fl16921.1 - cad.dwg

"HD" STAND DESIGN SCHEDULE CONTINUED

DESIGN SCHEDULES NOTES:

1. DESIGN SCHEDULES SHOWN HEREIN ARE REFERENCED TO ALLOWABLE STRENGTH DESIGN (ASD) METHODOLOGY.

2. EMPTY CELLS DENOTES CONDITIONS NOT ALLOWED TO USE.

3. MAXIMUM CALCULATED FACE AREA SHALL BE EQUAL TO OR LESS THAN THE MAXIMUM ALLOWABLE FACE AREA FOR EACH CONFIGURATION.

4. REFERENCE ANCHOR SCHEDULE FOR ANCHOR TYPES LISTED HEREIN.

36" STAND DEPTH: MAX FACE AREA (552in² - 2304in²), FRAME QUANTITY (2-3 FRAMES)

STAND CLEAR HEIGHT	MAX MEAN UNIT HEIGHT	MAX FACE AREA	UNIT TO FRAME RATIO: MAX FACE AREA : 3 FRAMES, ANCHOR TYPE: 1 OR 4 — MAX ALLOWABLE LATERAL LOAD	MAX ALLOWABLE UPLIFT	ANCHOR TYPE: 2 OR 3 — MAX ALLOWABLE LATERAL LOAD	MAX ALLOWABLE UPLIFT	MAX FACE AREA : 2 FRAMES, ANCHOR TYPE: 1 OR 4 — MAX ALLOWABLE LATERAL LOAD	MAX ALLOWABLE UPLIFT	ANCHOR TYPE: 2 OR 3 — MAX ALLOWABLE LATERAL LOAD	MAX ALLOWABLE UPLIFT	LOAD TRANSFER INFORMATION FOR USE WITH HOST STRUCTURE VERIFICATION ONLY: MAX. BASE MOMENT (M)	MAX. BASE SHEAR (V)	MAX. BASE UPLIFT (T)	MAX. BASE GRAVITY (C)
18 "	24 "	552 in²	200.0 PSF	157.8 PSF	200.0 PSF	157.8 PSF	200.0 PSF	157.8 PSF	200.0 PSF	157.8 PSF	210.20 LB-FT	191.6 LB	491.4 LB	328.0 LB
24 "			200.0 PSF	157.8 PSF	200.0 PSF	157.8 PSF	185.2 PSF	146.2 PSF	177.4 PSF	140.1 PSF	247.00 LB-FT	177.4 LB	513.4 LB	367.9 LB
30 "			200.0 PSF	157.8 PSF	200.0 PSF	157.8 PSF	153.8 PSF	121.4 PSF	153.8 PSF	121.4 PSF	247.00 LB-FT	147.4 LB	473.8 LB	366.3 LB
36 "			198.2 PSF	156.4 PSF	198.2 PSF	156.4 PSF	132.1 PSF	104.3 PSF	132.1 PSF	104.3 PSF	247.00 LB-FT	126.6 LB	451.3 LB	366.3 LB
18 "	30 "	930 in²	200.0 PSF	157.8 PSF	189.9 PSF	149.9 PSF	139.5 PSF	110.1 PSF	126.8 PSF	100.1 PSF	247.00 LB-FT	225.2 LB	617.1 LB	411.3 LB
24 "			164.8 PSF	130.1 PSF	156.5 PSF	123.5 PSF	109.9 PSF	86.7 PSF	104.4 PSF	82.4 PSF	247.00 LB-FT	177.4 LB	546.7 LB	397.5 LB
30 "			137.0 PSF	108.1 PSF	137.0 PSF	108.1 PSF	91.3 PSF	72.1 PSF	91.3 PSF	72.1 PSF	247.00 LB-FT	147.4 LB	502.1 LB	390.9 LB
36 "			117.6 PSF	92.8 PSF	117.6 PSF	92.8 PSF	78.4 PSF	61.9 PSF	78.4 PSF	61.9 PSF	247.00 LB-FT	126.6 LB	472.4 LB	387.4 LB
18 "	36 "	1260 in²	154.4 PSF	121.9 PSF	138.8 PSF	109.5 PSF	102.9 PSF	81.3 PSF	92.6 PSF	73.1 PSF	247.00 LB-FT	225.2 LB	658.4 LB	448.9 LB
24 "			121.7 PSF	96.0 PSF	114.5 PSF	90.4 PSF	81.1 PSF	64.0 PSF	76.4 PSF	60.3 PSF	247.00 LB-FT	177.4 LB	576.3 LB	427.1 LB
30 "			101.1 PSF	79.8 PSF	101.1 PSF	79.8 PSF	67.4 PSF	53.2 PSF	67.4 PSF	53.2 PSF	247.00 LB-FT	147.4 LB	526.7 LB	415.4 LB
36 "			86.8 PSF	68.5 PSF	86.8 PSF	68.5 PSF	57.8 PSF	45.7 PSF	57.8 PSF	45.7 PSF	247.00 LB-FT	126.6 LB	493.5 LB	408.5 LB
18 "	42 "	1680 in²	115.8 PSF	91.4 PSF	103.0 PSF	81.3 PSF	77.2 PSF	60.9 PSF	68.7 PSF	54.3 PSF	247.00 LB-FT	225.2 LB	696.0 LB	486.4 LB
24 "			91.2 PSF	72.0 PSF	85.2 PSF	67.2 PSF	60.8 PSF	48.0 PSF	56.8 PSF	44.8 PSF	247.00 LB-FT	177.4 LB	605.9 LB	456.7 LB
30 "			75.8 PSF	59.8 PSF	75.8 PSF	59.8 PSF	50.5 PSF	39.9 PSF	50.5 PSF	39.9 PSF	247.00 LB-FT	147.4 LB	551.3 LB	440.0 LB
36 "			65.1 PSF	51.4 PSF	65.1 PSF	51.4 PSF	43.4 PSF	34.2 PSF	43.4 PSF	34.2 PSF	247.00 LB-FT	126.6 LB	514.6 LB	429.6 LB
18 "	48 "	2304 in²	84.4 PSF	66.6 PSF	74.4 PSF	58.7 PSF	56.3 PSF	44.4 PSF	49.6 PSF	39.2 PSF	247.00 LB-FT	225.2 LB	733.5 LB	524.0 LB
24 "			66.5 PSF	52.5 PSF	61.6 PSF	48.6 PSF	44.3 PSF	35.0 PSF	41.1 PSF	32.4 PSF	247.00 LB-FT	177.4 LB	635.5 LB	486.3 LB
30 "			55.3 PSF	43.6 PSF	55.3 PSF	43.6 PSF	36.8 PSF	29.1 PSF	36.8 PSF	29.1 PSF	247.00 LB-FT	147.4 LB	575.9 LB	464.6 LB
36 "			47.4 PSF	37.4 PSF	47.4 PSF	37.4 PSF	31.6 PSF	24.9 PSF	31.6 PSF	24.9 PSF	247.00 LB-FT	126.6 LB	535.7 LB	450.7 LB

"XHD" STAND DESIGN SCHEDULE

24" STAND DEPTH: MAX FACE AREA (2760in² - 11520in²), FRAME QUANTITY (5-8 FRAMES)

STAND CLEAR HEIGHT	MAX MEAN UNIT HEIGHT	MAX FACE AREA	UNIT TO FRAME RATIO: MAX FACE AREA : 8 FRAMES, ANCHOR TYPE: 1 OR 4 — MAX ALLOWABLE LATERAL LOAD	MAX ALLOWABLE UPLIFT	ANCHORS TYPE: 2 OR 3 — MAX ALLOWABLE LATERAL LOAD	MAX ALLOWABLE UPLIFT	MAX FACE AREA : 7 FRAMES, ANCHOR TYPE: 1 OR 4 — MAX ALLOWABLE LATERAL LOAD	MAX ALLOWABLE UPLIFT	ANCHORS TYPE: 2 OR 3 — MAX ALLOWABLE LATERAL LOAD	MAX ALLOWABLE UPLIFT	MAX FACE AREA : 6 FRAMES, ANCHOR TYPE: 1 OR 4 — MAX ALLOWABLE LATERAL LOAD	MAX ALLOWABLE UPLIFT	ANCHORS TYPE: 2 OR 3 — MAX ALLOWABLE LATERAL LOAD	MAX ALLOWABLE UPLIFT	MAX FACE AREA : 5 FRAMES, ANCHOR TYPE: 1 OR 4 — MAX ALLOWABLE LATERAL LOAD	MAX ALLOWABLE UPLIFT	ANCHORS TYPE: 2 OR 3 — MAX ALLOWABLE LATERAL LOAD	MAX ALLOWABLE UPLIFT	LOAD TRANSFER INFORMATION FOR USE WITH HOST STRUCTURE VERIFICATION ONLY: MAX. BASE MOMENT (M)	MAX. BASE SHEAR (V)	MAX. BASE UPLIFT (T)	MAX. BASE GRAVITY (C)
18 "	24 "	2760 in²	200.0 PSF	157.8 PSF	200.0 PSF	157.8 PSF	200.0 PSF	157.8 PSF	200.0 PSF	157.8 PSF	200.0 PSF	157.8 PSF	200.0 PSF	157.8 PSF	181.6 PSF	143.4 PSF	167.8 PSF	132.5 PSF	311.90 LB-FT	348.1 LB	1209.7 LB	1032.5 LB
24 "			200.0 PSF	157.8 PSF	200.0 PSF	157.8 PSF	197.5 PSF	155.9 PSF	197.4 PSF	155.9 PSF	169.3 PSF	133.6 PSF	169.3 PSF	133.6 PSF	141.0 PSF	111.3 PSF	141.0 PSF	111.3 PSF	311.90 LB-FT	270.4 LB	1076.3 LB	990.8 LB
30 "			184.9 PSF	145.9 PSF	184.9 PSF	145.9 PSF	161.7 PSF	127.7 PSF	161.7 PSF	127.7 PSF	138.6 PSF	109.4 PSF	138.6 PSF	109.4 PSF	115.5 PSF	91.2 PSF	115.5 PSF	91.2 PSF	311.90 LB-FT	221.4 LB	991.4 LB	965.7 LB
36 "			156.7 PSF	123.7 PSF	156.7 PSF	123.7 PSF	137.1 PSF	108.2 PSF	137.1 PSF	108.2 PSF	117.5 PSF	92.7 PSF	117.5 PSF	92.7 PSF	97.9 PSF	77.3 PSF	97.9 PSF	77.3 PSF	311.90 LB-FT	187.7 LB	931.9 LB	948.8 LB
18 "	30 "	4650 in²	172.5 PSF	136.1 PSF	155.3 PSF	122.6 PSF	150.9 PSF	119.1 PSF	135.9 PSF	107.3 PSF	129.3 PSF	102.1 PSF	116.6 PSF	92.0 PSF	107.8 PSF	85.1 PSF	97.3 PSF	76.8 PSF	311.90 LB-FT	348.1 LB	1305.2 LB	1119.5 LB
24 "			133.9 PSF	105.7 PSF	131.2 PSF	103.5 PSF	117.2 PSF	92.5 PSF	114.8 PSF	90.7 PSF	100.4 PSF	79.3 PSF	98.5 PSF	77.8 PSF	83.7 PSF	66.1 PSF	82.2 PSF	64.9 PSF	311.90 LB-FT	270.4 LB	1145.9 LB	1058.4 LB
30 "			109.7 PSF	86.6 PSF	109.7 PSF	86.6 PSF	96.0 PSF	75.8 PSF	96.0 PSF	75.8 PSF	82.3 PSF	64.9 PSF	82.3 PSF	64.9 PSF	68.5 PSF	54.1 PSF	68.5 PSF	54.1 PSF	311.90 LB-FT	221.4 LB	1046.8 LB	1021.0 LB
36 "			93.0 PSF	73.4 PSF	93.0 PSF	73.4 PSF	81.3 PSF	64.2 PSF	81.3 PSF	64.2 PSF	69.7 PSF	55.0 PSF	69.7 PSF	55.0 PSF	58.1 PSF	45.8 PSF	58.1 PSF	45.8 PSF	311.90 LB-FT	187.7 LB	978.8 LB	995.8 LB
18 "	36 "	6300 in²	127.3 PSF	100.5 PSF	112.0 PSF	88.4 PSF	111.4 PSF	87.9 PSF	98.0 PSF	77.4 PSF	95.4 PSF	75.3 PSF	84.1 PSF	66.4 PSF	79.5 PSF	62.8 PSF	70.1 PSF	55.4 PSF	311.90 LB-FT	348.1 LB	1392.2 LB	1206.5 LB
24 "			98.9 PSF	78.0 PSF	94.9 PSF	74.9 PSF	86.5 PSF	68.3 PSF	83.1 PSF	65.6 PSF	74.1 PSF	58.5 PSF	71.3 PSF	56.3 PSF	61.8 PSF	48.8 PSF	59.5 PSF	46.9 PSF	311.90 LB-FT	270.4 LB	1213.5 LB	1126.0 LB
30 "			81.0 PSF	63.9 PSF	81.0 PSF	63.9 PSF	70.8 PSF	55.9 PSF	70.8 PSF	55.9 PSF	60.7 PSF	47.9 PSF	60.7 PSF	47.9 PSF	50.6 PSF	39.9 PSF	50.6 PSF	39.9 PSF	311.90 LB-FT	221.4 LB	1102.1 LB	1076.4 LB
36 "			68.6 PSF	54.1 PSF	68.6 PSF	54.1 PSF	60.0 PSF	47.4 PSF	60.0 PSF	47.4 PSF	51.4 PSF	40.6 PSF	51.4 PSF	40.6 PSF	42.9 PSF	33.8 PSF	42.9 PSF	33.8 PSF	311.90 LB-FT	187.7 LB	1025.8 LB	1042.7 LB
18 "	42 "	8400 in²	95.4 PSF	75.3 PSF	82.1 PSF	64.8 PSF	83.5 PSF	65.9 PSF	71.8 PSF	56.7 PSF	71.6 PSF	56.5 PSF	61.6 PSF	48.6 PSF	59.6 PSF	47.1 PSF	51.4 PSF	40.6 PSF	311.90 LB-FT	348.1 LB	1479.3 LB	1293.6 LB
24 "			74.1 PSF	58.5 PSF	69.8 PSF	55.1 PSF	64.9 PSF	51.2 PSF	61.1 PSF	48.2 PSF	55.6 PSF	43.9 PSF	52.4 PSF	41.4 PSF	46.3 PSF	36.6 PSF	43.7 PSF	34.5 PSF	311.90 LB-FT	270.4 LB	1281.2 LB	1193.6 LB
30 "			60.7 PSF	47.9 PSF	60.7 PSF	47.9 PSF	53.1 PSF	41.9 PSF	53.1 PSF	41.9 PSF	45.5 PSF	35.9 PSF	45.5 PSF	35.9 PSF	37.9 PSF	29.9 PSF	37.9 PSF	29.9 PSF	311.90 LB-FT	221.4 LB	1157.5 LB	1131.8 LB
36 "			51.4 PSF	40.6 PSF	51.4 PSF	40.6 PSF	45.0 PSF	35.5 PSF	45.0 PSF	35.5 PSF	38.6 PSF	30.4 PSF	38.6 PSF	30.4 PSF	32.1 PSF	25.4 PSF	32.1 PSF	25.4 PSF	311.90 LB-FT	187.7 LB	1072.7 LB	1089.6 LB
18 "	48 "	11520 in²	69.6 PSF	54.9 PSF	58.5 PSF	46.2 PSF	60.9 PSF	48.1 PSF	51.2 PSF	40.4 PSF	52.2 PSF	41.2 PSF	43.9 PSF	34.7 PSF	43.5 PSF	34.3 PSF	36.6 PSF	28.9 PSF	311.90 LB-FT	348.1 LB	1566.3 LB	1380.6 LB
24 "			54.0 PSF	42.7 PSF	49.9 PSF	39.4 PSF	47.3 PSF	37.3 PSF	43.7 PSF	34.5 PSF	40.5 PSF	32.0 PSF	37.5 PSF	29.6 PSF	33.8 PSF	26.6 PSF	31.3 PSF	24.7 PSF	311.90 LB-FT	270.4 LB	1348.8 LB	1261.2 LB
30 "			44.2 PSF	34.9 PSF	43.6 PSF	34.4 PSF	38.7 PSF	30.6 PSF	38.2 PSF	30.1 PSF	33.2 PSF	26.2 PSF	32.7 PSF	25.8 PSF	27.6 PSF	21.8 PSF	27.3 PSF	21.5 PSF	311.90 LB-FT	221.4 LB	1212.9 LB	1187.1 LB
36 "			37.5 PSF	29.6 PSF	37.5 PSF	29.6 PSF	32.8 PSF	25.9 PSF	32.8 PSF	25.9 PSF	28.1 PSF	22.2 PSF	28.1 PSF	22.2 PSF	23.4 PSF	18.5 PSF	23.4 PSF	18.5 PSF	311.90 LB-FT	187.7 LB	1119.6 LB	1136.6 LB

36" STAND DEPTH: MAX FACE AREA (2760in² - 11520in²), FRAME QUANTITY (5-8 FRAMES)

STAND CLEAR HEIGHT	MAX MEAN UNIT HEIGHT	MAX FACE AREA	UNIT TO FRAME RATIO: MAX FACE AREA : 8 FRAMES, ANCHOR TYPE: 1 OR 4 — MAX ALLOWABLE LATERAL LOAD	MAX ALLOWABLE UPLIFT	ANCHORS TYPE: 2 OR 3 — MAX ALLOWABLE LATERAL LOAD	MAX ALLOWABLE UPLIFT	MAX FACE AREA : 7 FRAMES, ANCHOR TYPE: 1 OR 4 — MAX ALLOWABLE LATERAL LOAD	MAX ALLOWABLE UPLIFT	ANCHORS TYPE: 2 OR 3 — MAX ALLOWABLE LATERAL LOAD	MAX ALLOWABLE UPLIFT	MAX FACE AREA : 6 FRAMES, ANCHOR TYPE: 1 OR 4 — MAX ALLOWABLE LATERAL LOAD	MAX ALLOWABLE UPLIFT	ANCHORS TYPE: 2 OR 3 — MAX ALLOWABLE LATERAL LOAD	MAX ALLOWABLE UPLIFT	MAX FACE AREA : 5 FRAMES, ANCHOR TYPE: 1 OR 4 — MAX ALLOWABLE LATERAL LOAD	MAX ALLOWABLE UPLIFT	ANCHORS TYPE: 2 OR 3 — MAX ALLOWABLE LATERAL LOAD	MAX ALLOWABLE UPLIFT	LOAD TRANSFER INFORMATION FOR USE WITH HOST STRUCTURE VERIFICATION ONLY: MAX. BASE MOMENT (M)	MAX. BASE SHEAR (V)	MAX. BASE UPLIFT (T)	MAX. BASE GRAVITY (C)
18 "	24 "	2760 in²	200.0 PSF	157.8 PSF	200.0 PSF	157.8 PSF	200.0 PSF	157.8 PSF	200.0 PSF	157.8 PSF	200.0 PSF	157.8 PSF	200.0 PSF	157.8 PSF	171.3 PSF	135.3 PSF	171.3 PSF	135.3 PSF	311.90 LB-FT	328.5 LB	839.1 LB	686.6 LB
24 "			200.0 PSF	157.8 PSF	200.0 PSF	157.8 PSF	187.7 PSF	148.2 PSF	187.7 PSF	148.2 PSF	160.9 PSF	127.0 PSF	160.9 PSF	127.0 PSF	134.0 PSF	105.8 PSF	134.0 PSF	105.8 PSF	311.90 LB-FT	256.9 LB	743.6 LB	675.0 LB
30 "			176.7 PSF	139.5 PSF	176.7 PSF	139.5 PSF	154.6 PSF	122.0 PSF	154.6 PSF	122.0 PSF	132.5 PSF	104.6 PSF	132.5 PSF	104.6 PSF	110.4 PSF	87.2 PSF	110.4 PSF	87.2 PSF	311.90 LB-FT	211.7 LB	682.4 LB	669.0 LB
36 "			150.5 PSF	118.8 PSF	150.5 PSF	118.8 PSF	131.6 PSF	103.9 PSF	131.6 PSF	103.9 PSF	112.8 PSF	89.1 PSF	112.8 PSF	89.1 PSF	94.0 PSF	74.2 PSF	94.0 PSF	74.2 PSF	311.90 LB-FT	180.2 LB	639.1 LB	665.4 LB
18 "	30 "	4650 in²	162.7 PSF	128.5 PSF	162.7 PSF	128.5 PSF	142.4 PSF	112.4 PSF	142.4 PSF	112.4 PSF	122.0 PSF	96.3 PSF	122.0 PSF	96.3 PSF	101.7 PSF	80.3 PSF	101.7 PSF	80.3 PSF	311.90 LB-FT	328.5 LB	902.3 LB	741.4 LB
24 "			127.3 PSF	100.5 PSF	127.3 PSF	100.5 PSF	111.4 PSF	87.9 PSF	111.4 PSF	87.9 PSF	95.5 PSF	75.3 PSF	95.5 PSF	75.3 PSF	79.5 PSF	62.8 PSF	79.5 PSF	62.8 PSF	311.90 LB-FT	256.9 LB	788.4 LB	717.9 LB
30 "			104.9 PSF	82.8 PSF	104.9 PSF	82.8 PSF	91.7 PSF	72.4 PSF	91.7 PSF	72.4 PSF	78.6 PSF	62.1 PSF	78.6 PSF	62.1 PSF	65.5 PSF	51.7 PSF	65.5 PSF	51.7 PSF	311.90 LB-FT	211.7 LB	717.6 LB	704.3 LB
36 "			89.3 PSF	70.5 PSF	89.3 PSF	70.5 PSF	78.1 PSF	61.7 PSF	78.1 PSF	61.7 PSF	66.9 PSF	52.8 PSF	66.9 PSF	52.8 PSF	55.8 PSF	44.0 PSF	55.8 PSF	44.0 PSF	311.90 LB-FT	180.2 LB	669.1 LB	695.4 LB
18 "	36 "	6300 in²	120.1 PSF	94.8 PSF	120.1 PSF	94.8 PSF	105.1 PSF	82.9 PSF	105.1 PSF	82.9 PSF	90.1 PSF	71.1 PSF	90.1 PSF	71.1 PSF	75.0 PSF	59.2 PSF	75.0 PSF	59.2 PSF	311.90 LB-FT	328.5 LB	957.0 LB	796.1 LB
24 "			93.9 PSF	74.2 PSF	93.9 PSF	74.2 PSF	82.2 PSF	64.9 PSF	82.2 PSF	64.9 PSF	70.4 PSF	55.6 PSF	70.4 PSF	55.6 PSF	58.7 PSF	46.3 PSF	58.7 PSF	46.3 PSF	311.90 LB-FT	256.9 LB	831.3 LB	760.7 LB
30 "			77.4 PSF	61.1 PSF	77.4 PSF	61.1 PSF	67.7 PSF	53.4 PSF	67.7 PSF	53.4 PSF	58.0 PSF	45.8 PSF	58.0 PSF	45.8 PSF	48.3 PSF	38.2 PSF	48.3 PSF	38.2 PSF	311.90 LB-FT	211.7 LB	752.9 LB	739.5 LB
36 "			65.9 PSF	52.0 PSF	65.9 PSF	52.0 PSF	57.6 PSF	45.5 PSF	57.6 PSF	45.5 PSF	49.4 PSF	39.0 PSF	49.4 PSF	39.0 PSF	41.2 PSF	32.5 PSF	41.2 PSF	32.5 PSF	311.90 LB-FT	180.2 LB	699.2 LB	725.5 LB
18 "	42 "	8400 in²	90.1 PSF	71.1 PSF	89.0 PSF	70.2 PSF	78.8 PSF	62.2 PSF	77.9 PSF	61.5 PSF	67.5 PSF	53.3 PSF	66.8 PSF	52.7 PSF	56.3 PSF	44.4 PSF	55.7 PSF	44.0 PSF	311.90 LB-FT	328.5 LB	1011.8 LB	850.9 LB
24 "			70.4 PSF	55.6 PSF	70.4 PSF	55.6 PSF	61.6 PSF	48.6 PSF	61.6 PSF	48.6 PSF	52.8 PSF	41.7 PSF	52.8 PSF	41.7 PSF	44.0 PSF	34.7 PSF	44.0 PSF	34.7 PSF	311.90 LB-FT	256.9 LB	874.1 LB	803.5 LB
30 "			58.0 PSF	45.8 PSF	58.0 PSF	45.8 PSF	50.8 PSF	40.1 PSF	50.8 PSF	40.1 PSF	43.5 PSF	34.3 PSF	43.5 PSF	34.3 PSF	36.2 PSF	28.6 PSF	36.2 PSF	28.6 PSF	311.90 LB-FT	211.7 LB	788.2 LB	774.8 LB
36 "			49.4 PSF	39.0 PSF	49.4 PSF	39.0 PSF	43.2 PSF	34.1 PSF	43.2 PSF	34.1 PSF	37.0 PSF	29.2 PSF	37.0 PSF	29.2 PSF	30.9 PSF	24.4 PSF	30.9 PSF	24.4 PSF	311.90 LB-FT	180.2 LB	729.2 LB	755.5 LB
18 "	48 "	11520 in²	65.7 PSF	51.8 PSF	63.8 PSF	50.4 PSF	57.4 PSF	45.3 PSF	55.9 PSF	44.1 PSF	49.2 PSF	38.9 PSF	47.9 PSF	37.8 PSF	41.0 PSF	32.4 PSF	40.0 PSF	31.5 PSF	311.90 LB-FT	328.5 LB	1066.5 LB	905.6 LB
24 "			51.3 PSF	40.5 PSF	51.3 PSF	40.5 PSF	44.9 PSF	35.5 PSF	44.9 PSF	35.5 PSF	38.5 PSF	30.4 PSF	38.5 PSF	30.4 PSF	32.1 PSF	25.3 PSF	32.1 PSF	25.3 PSF	311.90 LB-FT	256.9 LB	916.9 LB	846.4 LB
30 "			42.3 PSF	33.4 PSF	42.3 PSF	33.4 PSF	37.0 PSF	29.2 PSF	37.0 PSF	29.2 PSF	31.7 PSF	25.0 PSF	31.7 PSF	25.0 PSF	26.4 PSF	20.8 PSF	26.4 PSF	20.8 PSF	311.90 LB-FT	211.7 LB	823.5 LB	810.1 LB
36 "			36.0 PSF	28.4 PSF	36.0 PSF	28.4 PSF	31.5 PSF	24.9 PSF	31.5 PSF	24.9 PSF	27.0 PSF	21.3 PSF	27.0 PSF	21.3 PSF	22.5 PSF	17.7 PSF	22.5 PSF	17.7 PSF	311.90 LB-FT	180.2 LB	759.3 LB	785.6 LB

FRANK BENNARDO, P.E.
PE# 0046549 CA# 9885

FRANK L. BENNARDO LICENSE No PE0046549 STATE OF FLORIDA PROFESSIONAL ENGINEER

12/28/2023

DECEMBER 21, 2023

FL

FL 16921.1

ENGINEERING EXPRESS®
POSTAL ADDRESS:
2234 NORTH FEDERAL HWY #7664
BOCA RATON, FL 33431
ENGINEERINGEXPRESS.COM

PRECISION ALUMINUM PRODUCTS, INC.
1339 SW 1ST WAY
DEERFIELD BEACH, FL 33441
(954) 480-6919

ALUMINUM A/C STANDS
FLORIDA BUILDING CODE EIGHTH EDITION (2023)
FLORIDA STATEWIDE APPROVAL (FSA FL# 16921.1)

REMARKS	DRWN	CHKD	DATE
PREV. SUBMITTAL (20-32768)	CSL	RWN	12/15/20
2023 FBC UPDATE & TECH. CHANGES	MRT	RWN	12/08/23
-	-	-	-
-	-	-	-
-	-	-	-

COPYRIGHT ENGINEERING EXPRESS®

23-69401

SCALE: NTS UNLESS NOTED

11 OF 18

12/21/2023 1:55 PM MILTON c:\users\milton\engineering express\production - documents\projects\23-\23-69401 2023 product fbc update fl16921\work\2023 fbc\drawings & cad\23-69401c - fl16921.1 - cad.dwg

"XHD" STAND DESIGN SCHEDULE CONTINUED

DESIGN SCHEDULES NOTES:

1. DESIGN SCHEDULES SHOWN HEREIN ARE REFERENCED TO ALLOWABLE STRENGTH DESIGN (ASD) METHODOLOGY.
2. EMPTY CELLS DENOTES CONDITIONS NOT ALLOWED TO USE.
3. MAXIMUM CALCULATED FACE AREA SHALL BE EQUAL TO OR LESS THAN THE MAXIMUM ALLOWABLE FACE AREA FOR EACH CONFIGURATION.
4. REFERENCE ANCHOR SCHEDULE FOR ANCHOR TYPES LISTED HEREIN.

FRANK BENNARDO, P.E.
PE# 0046549 CA# 9885

FRANK L. BENNARDO LICENSE No PE0046549 STATE OF FLORIDA PROFESSIONAL ENGINEER

12/28/2023

DECEMBER 21, 2023

FL

24" STAND DEPTH: MAX FACE AREA (2208in² - 9216in²), FRAME QUANTITY (4-7 FRAMES)

STAND CLEAR HEIGHT	MAX MEAN UNIT HEIGHT	MAX FACE AREA	UNIT TO FRAME RATIO																LOAD TRANSFER INFORMATION FOR USE WITH HOST STRUCTURE VERIFICATION ONLY			
			MAX FACE AREA : 7 FRAMES				MAX FACE AREA : 6 FRAMES				MAX FACE AREA : 5 FRAMES				MAX FACE AREA : 4 FRAMES							
			ANCHOR TYPE: 1 OR 4		ANCHORS TYPE: 2 OR 3		ANCHOR TYPE: 1 OR 4		ANCHORS TYPE: 2 OR 3		ANCHOR TYPE: 1 OR 4		ANCHORS TYPE: 2 OR 3		ANCHOR TYPE: 1 OR 4		ANCHORS TYPE: 2 OR 3					
			MAX ALLOWABLE LATERAL LOAD	MAX ALLOWABLE UPLIFT	MAX ALLOWABLE LATERAL LOAD	MAX ALLOWABLE UPLIFT	MAX ALLOWABLE LATERAL LOAD	MAX ALLOWABLE UPLIFT	MAX ALLOWABLE LATERAL LOAD	MAX ALLOWABLE UPLIFT	MAX ALLOWABLE LATERAL LOAD	MAX ALLOWABLE UPLIFT	MAX ALLOWABLE LATERAL LOAD	MAX ALLOWABLE UPLIFT	MAX ALLOWABLE LATERAL LOAD	MAX ALLOWABLE UPLIFT	MAX ALLOWABLE LATERAL LOAD	MAX ALLOWABLE UPLIFT	MAX. BASE MOMENT (M)	MAX. BASE SHEAR (V)	MAX. BASE UPLIFT (T)	MAX. BASE GRAVITY (C)
18 "	24 "	2208 in²	200.0 PSF	157.8 PSF	200.0 PSF	157.8 PSF	200.0 PSF	157.8 PSF	200.0 PSF	157.8 PSF	200.0 PSF	157.8 PSF	200.0 PSF	157.8 PSF	181.6 PSF	143.4 PSF	167.8 PSF	132.5 PSF	311.90 LB-FT	348.1 LB	1209.7 LB	1032.5 LB
24 "			200.0 PSF	157.8 PSF	200.0 PSF	157.8 PSF	200.0 PSF	157.8 PSF	200.0 PSF	157.8 PSF	176.3 PSF	139.2 PSF	176.3 PSF	139.2 PSF	141.0 PSF	111.3 PSF	141.0 PSF	111.3 PSF	311.90 LB-FT	270.4 LB	1074.4 LB	990.8 LB
30 "			200.0 PSF	157.8 PSF	200.0 PSF	157.8 PSF	173.3 PSF	136.8 PSF	173.3 PSF	136.8 PSF	144.4 PSF	114.0 PSF	144.4 PSF	114.0 PSF	115.5 PSF	91.2 PSF	115.5 PSF	91.2 PSF	311.90 LB-FT	221.4 LB	990.4 LB	965.7 LB
36 "			171.3 PSF	135.3 PSF	171.3 PSF	135.3 PSF	146.9 PSF	115.9 PSF	146.9 PSF	115.9 PSF	122.4 PSF	96.6 PSF	122.4 PSF	96.6 PSF	97.9 PSF	77.3 PSF	97.9 PSF	77.3 PSF	311.90 LB-FT	187.7 LB	933.1 LB	948.8 LB
18 "	30 "	3720 in²	188.6 PSF	148.9 PSF	169.8 PSF	134.0 PSF	161.7 PSF	127.6 PSF	145.6 PSF	114.9 PSF	134.7 PSF	106.3 PSF	121.4 PSF	95.9 PSF	107.8 PSF	85.1 PSF	97.3 PSF	76.8 PSF	311.90 LB-FT	348.1 LB	1306.4 LB	1119.5 LB
24 "			146.5 PSF	115.7 PSF	143.4 PSF	113.2 PSF	125.6 PSF	99.1 PSF	123.0 PSF	97.1 PSF	104.6 PSF	82.6 PSF	102.6 PSF	81.0 PSF	83.7 PSF	66.1 PSF	82.2 PSF	64.9 PSF	311.90 LB-FT	270.4 LB	1147.1 LB	1058.4 LB
30 "			120.0 PSF	94.7 PSF	120.0 PSF	94.7 PSF	102.8 PSF	81.2 PSF	102.8 PSF	81.2 PSF	85.7 PSF	67.6 PSF	85.7 PSF	67.6 PSF	68.5 PSF	54.1 PSF	68.5 PSF	54.1 PSF	311.90 LB-FT	221.4 LB	1048.0 LB	1021.0 LB
36 "			101.7 PSF	80.3 PSF	101.7 PSF	80.3 PSF	87.1 PSF	68.8 PSF	87.1 PSF	68.8 PSF	72.6 PSF	57.3 PSF	72.6 PSF	57.3 PSF	58.1 PSF	45.8 PSF	58.1 PSF	45.8 PSF	311.90 LB-FT	187.7 LB	980.0 LB	995.8 LB
18 "	36 "	5040 in²	139.2 PSF	109.9 PSF	122.4 PSF	96.6 PSF	119.3 PSF	94.2 PSF	105.0 PSF	82.9 PSF	99.4 PSF	78.5 PSF	87.6 PSF	69.1 PSF	79.5 PSF	62.8 PSF	70.1 PSF	55.4 PSF	311.90 LB-FT	348.1 LB	1393.4 LB	1206.5 LB
24 "			108.1 PSF	85.4 PSF	103.8 PSF	81.9 PSF	92.7 PSF	73.2 PSF	89.0 PSF	70.3 PSF	77.2 PSF	61.0 PSF	74.2 PSF	58.6 PSF	61.8 PSF	48.8 PSF	59.5 PSF	46.9 PSF	311.90 LB-FT	270.4 LB	1214.7 LB	1126.0 LB
30 "			88.5 PSF	69.9 PSF	88.5 PSF	69.9 PSF	75.9 PSF	59.9 PSF	75.9 PSF	59.9 PSF	63.2 PSF	49.9 PSF	63.2 PSF	49.9 PSF	50.6 PSF	39.9 PSF	50.6 PSF	39.9 PSF	311.90 LB-FT	221.4 LB	1103.3 LB	1076.4 LB
36 "			75.0 PSF	59.2 PSF	75.0 PSF	59.2 PSF	64.3 PSF	50.8 PSF	64.3 PSF	50.8 PSF	53.6 PSF	42.3 PSF	53.6 PSF	42.3 PSF	42.9 PSF	33.8 PSF	42.9 PSF	33.8 PSF	311.90 LB-FT	187.7 LB	1027.0 LB	1042.7 LB
18 "	42 "	6720 in²	104.4 PSF	82.4 PSF	89.7 PSF	70.8 PSF	89.5 PSF	70.6 PSF	77.0 PSF	60.7 PSF	74.6 PSF	58.8 PSF	64.2 PSF	50.7 PSF	59.6 PSF	47.1 PSF	51.4 PSF	40.6 PSF	311.90 LB-FT	348.1 LB	1480.5 LB	1293.6 LB
24 "			81.1 PSF	64.0 PSF	76.3 PSF	60.3 PSF	69.5 PSF	54.9 PSF	65.5 PSF	51.7 PSF	57.9 PSF	45.7 PSF	54.6 PSF	43.1 PSF	46.3 PSF	36.6 PSF	43.7 PSF	34.5 PSF	311.90 LB-FT	270.4 LB	1282.4 LB	1193.6 LB
30 "			66.4 PSF	52.4 PSF	66.4 PSF	52.4 PSF	56.9 PSF	44.9 PSF	56.9 PSF	44.9 PSF	47.4 PSF	37.4 PSF	47.4 PSF	37.4 PSF	37.9 PSF	29.9 PSF	37.9 PSF	29.9 PSF	311.90 LB-FT	221.4 LB	1158.7 LB	1131.8 LB
36 "			56.3 PSF	44.4 PSF	56.3 PSF	44.4 PSF	48.2 PSF	38.1 PSF	48.2 PSF	38.1 PSF	40.2 PSF	31.7 PSF	40.2 PSF	31.7 PSF	32.1 PSF	25.4 PSF	32.1 PSF	25.4 PSF	311.90 LB-FT	187.7 LB	1073.9 LB	1089.6 LB
18 "	48 "	9216 in²	76.1 PSF	60.1 PSF	64.0 PSF	50.5 PSF	65.2 PSF	51.5 PSF	54.9 PSF	43.3 PSF	54.3 PSF	42.9 PSF	45.8 PSF	36.1 PSF	43.5 PSF	34.3 PSF	36.6 PSF	28.9 PSF	311.90 LB-FT	348.1 LB	1567.5 LB	1380.6 LB
24 "			59.1 PSF	46.7 PSF	54.6 PSF	43.1 PSF	50.7 PSF	40.0 PSF	46.8 PSF	37.0 PSF	42.2 PSF	33.3 PSF	39.1 PSF	30.8 PSF	33.8 PSF	26.6 PSF	31.3 PSF	24.7 PSF	311.90 LB-FT	270.4 LB	1350.0 LB	1261.2 LB
30 "			48.4 PSF	38.2 PSF	47.7 PSF	37.6 PSF	41.5 PSF	32.7 PSF	40.9 PSF	32.3 PSF	34.6 PSF	27.3 PSF	34.1 PSF	26.9 PSF	27.6 PSF	21.8 PSF	27.3 PSF	21.5 PSF	311.90 LB-FT	221.4 LB	1214.1 LB	1187.1 LB
36 "			41.0 PSF	32.4 PSF	41.0 PSF	32.4 PSF	35.1 PSF	27.7 PSF	35.1 PSF	27.7 PSF	29.3 PSF	23.1 PSF	29.3 PSF	23.1 PSF	23.4 PSF	18.5 PSF	23.4 PSF	18.5 PSF	311.90 LB-FT	187.7 LB	1120.8 LB	1136.6 LB

36" STAND DEPTH: MAX FACE AREA (2208in² - 9216in²), FRAME QUANTITY (4-7 FRAMES)

STAND CLEAR HEIGHT	MAX MEAN UNIT HEIGHT	MAX FACE AREA	UNIT TO FRAME RATIO																LOAD TRANSFER INFORMATION FOR USE WITH HOST STRUCTURE VERIFICATION ONLY			
			MAX FACE AREA : 7 FRAMES				MAX FACE AREA : 6 FRAMES				MAX FACE AREA : 5 FRAMES				MAX FACE AREA : 4 FRAMES							
			ANCHOR TYPE: 1 OR 4		ANCHORS TYPE: 2 OR 3		ANCHOR TYPE: 1 OR 4		ANCHORS TYPE: 2 OR 3		ANCHOR TYPE: 1 OR 4		ANCHORS TYPE: 2 OR 3		ANCHOR TYPE: 1 OR 4		ANCHORS TYPE: 2 OR 3					
			MAX ALLOWABLE LATERAL LOAD	MAX ALLOWABLE UPLIFT	MAX ALLOWABLE LATERAL LOAD	MAX ALLOWABLE UPLIFT	MAX ALLOWABLE LATERAL LOAD	MAX ALLOWABLE UPLIFT	MAX ALLOWABLE LATERAL LOAD	MAX ALLOWABLE UPLIFT	MAX ALLOWABLE LATERAL LOAD	MAX ALLOWABLE UPLIFT	MAX ALLOWABLE LATERAL LOAD	MAX ALLOWABLE UPLIFT	MAX ALLOWABLE LATERAL LOAD	MAX ALLOWABLE UPLIFT	MAX ALLOWABLE LATERAL LOAD	MAX ALLOWABLE UPLIFT	MAX. BASE MOMENT (M)	MAX. BASE SHEAR (V)	MAX. BASE UPLIFT (T)	MAX. BASE GRAVITY (C)
18 "	24 "	2208 in²	200.0 PSF	157.8 PSF	200.0 PSF	157.8 PSF	200.0 PSF	157.8 PSF	200.0 PSF	157.8 PSF	200.0 PSF	157.8 PSF	200.0 PSF	157.8 PSF	171.3 PSF	135.3 PSF	171.3 PSF	135.3 PSF	311.90 LB-FT	328.5 LB	839.1 LB	686.6 LB
24 "			200.0 PSF	157.8 PSF	200.0 PSF	157.8 PSF	200.0 PSF	157.8 PSF	200.0 PSF	157.8 PSF	167.6 PSF	132.3 PSF	167.6 PSF	132.3 PSF	134.0 PSF	105.8 PSF	134.0 PSF	105.8 PSF	311.90 LB-FT	256.9 LB	741.7 LB	675.0 LB
30 "			193.3 PSF	152.6 PSF	193.3 PSF	152.6 PSF	165.6 PSF	130.8 PSF	165.6 PSF	130.8 PSF	138.0 PSF	109.0 PSF	138.0 PSF	109.0 PSF	110.4 PSF	87.2 PSF	110.4 PSF	87.2 PSF	311.90 LB-FT	211.7 LB	683.6 LB	669.0 LB
36 "			164.6 PSF	129.9 PSF	164.6 PSF	129.9 PSF	141.0 PSF	111.3 PSF	141.0 PSF	111.3 PSF	117.5 PSF	92.8 PSF	117.5 PSF	92.8 PSF	94.0 PSF	74.2 PSF	94.0 PSF	74.2 PSF	311.90 LB-FT	180.2 LB	640.3 LB	665.4 LB
18 "	30 "	3720 in²	178.0 PSF	140.5 PSF	178.0 PSF	140.5 PSF	152.5 PSF	120.4 PSF	152.5 PSF	120.4 PSF	127.1 PSF	100.3 PSF	127.1 PSF	100.3 PSF	101.7 PSF	80.3 PSF	101.7 PSF	80.3 PSF	311.90 LB-FT	328.5 LB	903.5 LB	741.4 LB
24 "			139.2 PSF	109.9 PSF	139.2 PSF	109.9 PSF	119.3 PSF	94.2 PSF	119.3 PSF	94.2 PSF	99.4 PSF	78.5 PSF	99.4 PSF	78.5 PSF	79.5 PSF	62.8 PSF	79.5 PSF	62.8 PSF	311.90 LB-FT	256.9 LB	789.7 LB	717.9 LB
30 "			114.7 PSF	90.5 PSF	114.7 PSF	90.5 PSF	98.3 PSF	77.6 PSF	98.3 PSF	77.6 PSF	81.9 PSF	64.7 PSF	81.9 PSF	64.7 PSF	65.5 PSF	51.7 PSF	65.5 PSF	51.7 PSF	311.90 LB-FT	211.7 LB	718.8 LB	704.3 LB
36 "			97.7 PSF	77.1 PSF	97.7 PSF	77.1 PSF	83.7 PSF	66.1 PSF	83.7 PSF	66.1 PSF	69.7 PSF	55.0 PSF	69.7 PSF	55.0 PSF	55.8 PSF	44.0 PSF	55.8 PSF	44.0 PSF	311.90 LB-FT	180.2 LB	670.3 LB	695.4 LB
18 "	36 "	5040 in²	131.4 PSF	103.7 PSF	131.4 PSF	103.7 PSF	112.6 PSF	88.9 PSF	112.6 PSF	88.9 PSF	93.8 PSF	74.1 PSF	93.8 PSF	74.1 PSF	75.0 PSF	59.2 PSF	75.0 PSF	59.2 PSF	311.90 LB-FT	328.5 LB	958.2 LB	796.1 LB
24 "			102.7 PSF	81.1 PSF	102.7 PSF	81.1 PSF	88.1 PSF	69.5 PSF	88.1 PSF	69.5 PSF	73.4 PSF	57.9 PSF	73.4 PSF	57.9 PSF	58.7 PSF	46.3 PSF	58.7 PSF	46.3 PSF	311.90 LB-FT	256.9 LB	832.5 LB	760.7 LB
30 "			84.6 PSF	66.8 PSF	84.6 PSF	66.8 PSF	72.5 PSF	57.3 PSF	72.5 PSF	57.3 PSF	60.4 PSF	47.7 PSF	60.4 PSF	47.7 PSF	48.3 PSF	38.2 PSF	48.3 PSF	38.2 PSF	311.90 LB-FT	211.7 LB	754.1 LB	739.5 LB
36 "			72.1 PSF	56.9 PSF	72.1 PSF	56.9 PSF	61.8 PSF	48.8 PSF	61.8 PSF	48.8 PSF	51.5 PSF	40.6 PSF	51.5 PSF	40.6 PSF	41.2 PSF	32.5 PSF	41.2 PSF	32.5 PSF	311.90 LB-FT	180.2 LB	700.4 LB	725.5 LB
18 "	42 "	6720 in²	98.5 PSF	77.8 PSF	97.3 PSF	76.8 PSF	84.4 PSF	66.6 PSF	83.4 PSF	65.9 PSF	70.3 PSF	55.5 PSF	69.6 PSF	54.9 PSF	56.3 PSF	44.4 PSF	55.7 PSF	44.0 PSF	311.90 LB-FT	328.5 LB	1013.0 LB	850.9 LB
24 "			77.0 PSF	60.8 PSF	77.0 PSF	60.8 PSF	66.0 PSF	52.1 PSF	66.0 PSF	52.1 PSF	55.0 PSF	43.4 PSF	55.0 PSF	43.4 PSF	44.0 PSF	34.7 PSF	44.0 PSF	34.7 PSF	311.90 LB-FT	256.9 LB	875.3 LB	803.5 LB
30 "			63.5 PSF	50.1 PSF	63.5 PSF	50.1 PSF	54.4 PSF	42.9 PSF	54.4 PSF	42.9 PSF	45.3 PSF	35.8 PSF	45.3 PSF	35.8 PSF	36.2 PSF	28.6 PSF	36.2 PSF	28.6 PSF	311.90 LB-FT	211.7 LB	789.4 LB	774.8 LB
36 "			54.0 PSF	42.7 PSF	54.0 PSF	42.7 PSF	46.3 PSF	36.6 PSF	46.3 PSF	36.6 PSF	38.6 PSF	30.5 PSF	38.6 PSF	30.5 PSF	30.9 PSF	24.4 PSF	30.9 PSF	24.4 PSF	311.90 LB-FT	180.2 LB	730.4 LB	755.5 LB
18 "	48 "	9216 in²	71.8 PSF	56.7 PSF	69.8 PSF	55.1 PSF	61.5 PSF	48.6 PSF	59.8 PSF	47.2 PSF	51.3 PSF	40.5 PSF	49.9 PSF	39.4 PSF	41.0 PSF	32.4 PSF	40.0 PSF	31.5 PSF	311.90 LB-FT	328.5 LB	1067.7 LB	905.6 LB
24 "			56.2 PSF	44.3 PSF	56.2 PSF	44.3 PSF	48.1 PSF	38.0 PSF	48.1 PSF	38.0 PSF	40.1 PSF	31.7 PSF	40.1 PSF	31.7 PSF	32.1 PSF	25.3 PSF	32.1 PSF	25.3 PSF	311.90 LB-FT	256.9 LB	918.2 LB	846.4 LB
30 "			46.3 PSF	36.5 PSF	46.3 PSF	36.5 PSF	39.6 PSF	31.3 PSF	39.6 PSF	31.3 PSF	33.0 PSF	26.1 PSF	33.0 PSF	26.1 PSF	26.4 PSF	20.8 PSF	26.4 PSF	20.8 PSF	311.90 LB-FT	211.7 LB	824.7 LB	810.1 LB
36 "			39.4 PSF	31.1 PSF	39.4 PSF	31.1 PSF	33.8 PSF	26.6 PSF	33.8 PSF	26.6 PSF	28.1 PSF	22.2 PSF	28.1 PSF	22.2 PSF	22.5 PSF	17.7 PSF	22.5 PSF	17.7 PSF	311.90 LB-FT	180.2 LB	760.5 LB	785.6 LB

24" STAND DEPTH: MAX FACE AREA (1656in² - 6912in²), FRAME QUANTITY (3-6 FRAMES)

STAND CLEAR HEIGHT	MAX MEAN UNIT HEIGHT	MAX FACE AREA	UNIT TO FRAME RATIO																LOAD TRANSFER INFORMATION FOR USE WITH HOST STRUCTURE VERIFICATION ONLY			
			MAX FACE AREA : 6 FRAMES				MAX FACE AREA : 5 FRAMES				MAX FACE AREA : 4 FRAMES				MAX FACE AREA : 3 FRAMES							
			ANCHOR TYPE: 1 OR 4		ANCHORS TYPE: 2 OR 3		ANCHOR TYPE: 1 OR 4		ANCHORS TYPE: 2 OR 3		ANCHOR TYPE: 1 OR 4		ANCHORS TYPE: 2 OR 3		ANCHOR TYPE: 1 OR 4		ANCHORS TYPE: 2 OR 3					
			MAX ALLOWABLE LATERAL LOAD	MAX ALLOWABLE UPLIFT	MAX ALLOWABLE LATERAL LOAD	MAX ALLOWABLE UPLIFT	MAX ALLOWABLE LATERAL LOAD	MAX ALLOWABLE UPLIFT	MAX ALLOWABLE LATERAL LOAD	MAX ALLOWABLE UPLIFT	MAX ALLOWABLE LATERAL LOAD	MAX ALLOWABLE UPLIFT	MAX ALLOWABLE LATERAL LOAD	MAX ALLOWABLE UPLIFT	MAX ALLOWABLE LATERAL LOAD	MAX ALLOWABLE UPLIFT	MAX ALLOWABLE LATERAL LOAD	MAX ALLOWABLE UPLIFT	MAX. BASE MOMENT (M)	MAX. BASE SHEAR (V)	MAX. BASE UPLIFT (T)	MAX. BASE GRAVITY (C)
18 "	24 "	1656 in²	200.0 PSF	157.8 PSF	200.0 PSF	157.8 PSF	200.0 PSF	157.8 PSF	200.0 PSF	157.8 PSF	200.0 PSF	157.8 PSF	200.0 PSF	157.8 PSF	181.6 PSF	143.4 PSF	167.8 PSF	132.5 PSF	311.90 LB-FT	348.1 LB	1209.7 LB	1032.5 LB
24 "			200.0 PSF	157.8 PSF	200.0 PSF	157.8 PSF	200.0 PSF	157.8 PSF	200.0 PSF	157.8 PSF	188.1 PSF	148.5 PSF	188.1 PSF	148.5 PSF	141.0 PSF	111.3 PSF	141.0 PSF	111.3 PSF	311.90 LB-FT	270.4 LB	1075.5 LB	990.8 LB
30 "			200.0 PSF	157.8 PSF	200.0 PSF	157.8 PSF	192.6 PSF	152.0 PSF	192.6 PSF	152.0 PSF	154.0 PSF	121.6 PSF	154.0 PSF	121.6 PSF	115.5 PSF	91.2 PSF	115.5 PSF	91.2 PSF	311.90 LB-FT	221.4 LB	991.9 LB	965.7 LB
36 "			195.8 PSF	154.6 PSF	195.8 PSF	154.6 PSF	163.2 PSF	128.8 PSF	163.2 PSF	128.8 PSF	130.5 PSF	103.0 PSF	130.5 PSF	103.0 PSF	97.9 PSF	77.3 PSF	97.9 PSF	77.3 PSF	311.90 LB-FT	187.7 LB	934.7 LB	948.8 LB
18 "	30 "	2790 in²	200.0 PSF	157.8 PSF	193.9 PSF	153.1 PSF	179.6 PSF	141.8 PSF	161.7 PSF	127.6 PSF	143.7 PSF	113.4 PSF	129.5 PSF	102.2 PSF	107.8 PSF	85.1 PSF	97.3 PSF	76.8 PSF	311.90 LB-FT	348.1 LB	1305.8 LB	1119.5 LB
24 "			167.4 PSF	132.2 PSF	163.8 PSF	129.3 PSF	139.5 PSF	110.1 PSF	136.6 PSF	107.8 PSF	111.6 PSF	88.1 PSF	109.4 PSF	86.4 PSF	83.7 PSF	66.1 PSF	82.2 PSF	64.9 PSF	311.90 LB-FT	270.4 LB	1148.7 LB	1058.4 LB
30 "			137.1 PSF	108.3 PSF	137.1 PSF	108.3 PSF	114.3 PSF	90.2 PSF	114.3 PSF	90.2 PSF	91.4 PSF	72.2 PSF	91.4 PSF	72.2 PSF	68.5 PSF	54.1 PSF	68.5 PSF	54.1 PSF	311.90 LB-FT	221.4 LB	1049.6 LB	1021.0 LB
36 "			116.2 PSF	91.7 PSF	116.2 PSF	91.7 PSF	96.8 PSF	76.4 PSF	96.8 PSF	76.4 PSF	77.5 PSF	61.1 PSF	77.5 PSF	61.1 PSF	58.1 PSF	45.8 PSF	58.1 PSF	45.8 PSF	311.90 LB-FT	187.7 LB	981.6 LB	995.8 LB
18 "	36 "	3780 in²	159.1 PSF	125.6 PSF	139.8 PSF	110.4 PSF	132.6 PSF	104.7 PSF	116.6 PSF	92.0 PSF	106.1 PSF	83.7 PSF	93.4 PSF	73.7 PSF	79.5 PSF	62.8 PSF	70.1 PSF	55.4 PSF	311.90 LB-FT	348.1 LB	1395.1 LB	1206.5 LB
24 "			123.6 PSF	97.6 PSF	118.6 PSF	93.6 PSF	103.0 PSF	81.3 PSF	98.9 PSF	78.0 PSF	82.4 PSF	65.0 PSF	79.2 PSF	62.5 PSF	61.8 PSF	48.8 PSF	59.5 PSF	46.9 PSF	311.90 LB-FT	270.4 LB	1216.4 LB	1126.0 LB
30 "			101.2 PSF	79.9 PSF	101.2 PSF	79.9 PSF	84.3 PSF	66.6 PSF	84.3 PSF	66.6 PSF	67.5 PSF	53.2 PSF	67.5 PSF	53.2 PSF	50.6 PSF	39.9 PSF	50.6 PSF	39.9 PSF	311.90 LB-FT	221.4 LB	1104.9 LB	1076.4 LB
36 "			85.8 PSF	67.7 PSF	85.8 PSF	67.7 PSF	71.5 PSF	56.4 PSF	71.5 PSF	56.4 PSF	57.2 PSF	45.1 PSF	57.2 PSF	45.1 PSF	42.9 PSF	33.8 PSF	42.9 PSF	33.8 PSF	311.90 LB-FT	187.7 LB	1028.6 LB	1042.7 LB
18 "	42 "	5040 in²	119.3 PSF	94.2 PSF	102.5 PSF	80.9 PSF	99.4 PSF	78.5 PSF	85.5 PSF	67.5 PSF	79.5 PSF	62.8 PSF	68.4 PSF	54.0 PSF	59.6 PSF	47.1 PSF	51.4 PSF	40.6 PSF	311.90 LB-FT	348.1 LB	1482.1 LB	1293.6 LB
24 "			92.7 PSF	73.2 PSF	87.2 PSF	68.8 PSF	77.2 PSF	61.0 PSF	72.7 PSF	57.4 PSF	61.8 PSF	48.8 PSF	58.2 PSF	46.0 PSF	46.3 PSF	36.6 PSF	43.7 PSF	34.5 PSF	311.90 LB-FT	270.4 LB	1284.0 LB	1193.6 LB
30 "			75.9 PSF	59.9 PSF	75.9 PSF	59.9 PSF	63.2 PSF	49.9 PSF	63.2 PSF	49.9 PSF	50.6 PSF	39.9 PSF	50.6 PSF	39.9 PSF	37.9 PSF	29.9 PSF	37.9 PSF	29.9 PSF	311.90 LB-FT	221.4 LB	1160.3 LB	1131.8 LB
36 "			64.3 PSF	50.8 PSF	64.3 PSF	50.8 PSF	53.6 PSF	42.3 PSF	53.6 PSF	42.3 PSF	42.9 PSF	33.8 PSF	42.9 PSF	33.8 PSF	32.1 PSF	25.4 PSF	32.1 PSF	25.4 PSF	311.90 LB-FT	187.7 LB	1075.5 LB	1089.6 LB
18 "	48 "	6912 in²	87.0 PSF	68.7 PSF	73.1 PSF	57.7 PSF	72.5 PSF	57.2 PSF	60.9 PSF	48.1 PSF	58.0 PSF	45.8 PSF	48.8 PSF	38.5 PSF	43.5 PSF	34.3 PSF	36.6 PSF	28.9 PSF	311.90 LB-FT	348.1 LB	1569.1 LB	1380.6 LB
24 "			67.6 PSF	53.3 PSF	62.4 PSF	49.2 PSF	56.3 PSF	44.4 PSF	52.0 PSF	41.1 PSF	45.0 PSF	35.5 PSF	41.6 PSF	32.9 PSF	33.8 PSF	26.6 PSF	31.3 PSF	24.7 PSF	311.90 LB-FT	270.4 LB	1351.6 LB	1261.2 LB
30 "			55.3 PSF	43.7 PSF	54.5 PSF	43.0 PSF	46.1 PSF	36.4 PSF	45.4 PSF	35.8 PSF	36.9 PSF	29.1 PSF	36.4 PSF	28.7 PSF	27.6 PSF	21.8 PSF	27.3 PSF	21.5 PSF	311.90 LB-FT	221.4 LB	1215.7 LB	1187.1 LB
36 "			46.9 PSF	37.0 PSF	46.9 PSF	37.0 PSF	39.1 PSF	30.8 PSF	39.1 PSF	30.8 PSF	31.2 PSF	24.7 PSF	31.2 PSF	24.7 PSF	23.4 PSF	18.5 PSF	23.4 PSF	18.5 PSF	311.90 LB-FT	187.7 LB	1122.4 LB	1136.6 LB

FL 16921.1

ENGINEERING EXPRESS®
POSTAL ADDRESS:
2234 NORTH FEDERAL HWY #7664
BOCA RATON, FL 33431
ENGINEERINGEXPRESS.COM

PRECISION ALUMINUM PRODUCTS, INC.
1339 SW 1ST WAY
DEERFIELD BEACH, FL 33441
(954) 480-6919

ALUMINUM A/C STANDS
FLORIDA BUILDING CODE EIGHTH EDITION (2023)
FLORIDA STATEWIDE APPROVAL (FSA FL#16921.1)

REMARKS	DRWN	CHKD	DATE
PREV. SUBMITTAL (20-32768)	CSL	RWN	12/15/20
2023 FBC UPDATE & TECH. CHANGES	MRT	RWN	12/08/23

COPYRIGHT ENGINEERING EXPRESS®

23-69401

SCALE: NTS UNLESS NOTED

12/21/2023 1:55 PM MILTON c:\users\milton\engineering express\production - documents\projects\23-\23-69401 2023 product fbc update fl16921\work\2023 fbc\drawings & cad\23-69401c - fl16921.1 - cad.dwg

"XHD" STAND DESIGN SCHEDULE CONTINUED

DESIGN SCHEDULES NOTES:

1. DESIGN SCHEDULES SHOWN HEREIN ARE REFERENCED TO ALLOWABLE STRENGTH DESIGN (ASD) METHODOLOGY.
2. EMPTY CELLS DENOTES CONDITIONS NOT ALLOWED TO USE.
3. MAXIMUM CALCULATED FACE AREA SHALL BE EQUAL TO OR LESS THAN THE MAXIMUM ALLOWABLE FACE AREA FOR EACH CONFIGURATION.
4. REFERENCE ANCHOR SCHEDULE FOR ANCHOR TYPES LISTED HEREIN.

FRANK BENNARDO, P.E.
PE# 0046549 CA# 9885

FRANK L. BENNARDO LICENSE No PE0046549 STATE OF FLORIDA PROFESSIONAL ENGINEER

12/28/2023

DECEMBER 21, 2023

FL

36" STAND DEPTH: MAX FACE AREA (1656in² - 6912in²), FRAME QUANTITY (3-6 FRAMES)

UNIT TO FRAME RATIO

STAND CLEAR HEIGHT	MAX MEAN UNIT HEIGHT	MAX FACE AREA	MAX FACE AREA : 6 FRAMES				MAX FACE AREA : 5 FRAMES				MAX FACE AREA : 4 FRAMES				MAX FACE AREA : 3 FRAMES				LOAD TRANSFER INFORMATION FOR USE WITH HOST STRUCTURE VERIFICATION ONLY			
			ANCHOR TYPE: 1 OR 4		ANCHORS TYPE: 2 OR 3		ANCHOR TYPE: 1 OR 4		ANCHORS TYPE: 2 OR 3		ANCHOR TYPE: 1 OR 4		ANCHORS TYPE: 2 OR 3		ANCHOR TYPE: 1 OR 4		ANCHORS TYPE: 2 OR 3					
			MAX ALLOWABLE LATERAL LOAD	MAX ALLOWABLE UPLIFT	MAX ALLOWABLE LATERAL LOAD	MAX ALLOWABLE UPLIFT	MAX ALLOWABLE LATERAL LOAD	MAX ALLOWABLE UPLIFT	MAX ALLOWABLE LATERAL LOAD	MAX ALLOWABLE UPLIFT	MAX ALLOWABLE LATERAL LOAD	MAX ALLOWABLE UPLIFT	MAX ALLOWABLE LATERAL LOAD	MAX ALLOWABLE UPLIFT	MAX ALLOWABLE LATERAL LOAD	MAX ALLOWABLE UPLIFT	MAX ALLOWABLE LATERAL LOAD	MAX ALLOWABLE UPLIFT	MAX. BASE MOMENT (M)	MAX. BASE SHEAR (V)	MAX. BASE UPLIFT (T)	MAX. BASE GRAVITY (C)
18 "	24 "	1656 in²	200.0 PSF	157.8 PSF	200.0 PSF	157.8 PSF	200.0 PSF	157.8 PSF	200.0 PSF	157.8 PSF	200.0 PSF	157.8 PSF	200.0 PSF	157.8 PSF	171.3 PSF	135.3 PSF	171.3 PSF	135.3 PSF	311.90 LB-FT	328.5 LB	839.1 LB	686.6 LB
24 "			200.0 PSF	157.8 PSF	200.0 PSF	157.8 PSF	200.0 PSF	157.8 PSF	200.0 PSF	157.8 PSF	178.7 PSF	141.1 PSF	178.7 PSF	141.1 PSF	134.0 PSF	105.8 PSF	134.0 PSF	105.8 PSF	311.90 LB-FT	256.9 LB	742.8 LB	675.0 LB
30 "			200.0 PSF	157.8 PSF	200.0 PSF	157.8 PSF	184.1 PSF	145.3 PSF	184.1 PSF	145.3 PSF	147.2 PSF	116.2 PSF	147.2 PSF	116.2 PSF	110.4 PSF	87.2 PSF	110.4 PSF	87.2 PSF	311.90 LB-FT	211.7 LB	682.9 LB	669.0 LB
36 "			188.1 PSF	148.5 PSF	188.1 PSF	148.5 PSF	156.7 PSF	123.7 PSF	156.7 PSF	123.7 PSF	125.4 PSF	99.0 PSF	125.4 PSF	99.0 PSF	94.0 PSF	74.2 PSF	94.0 PSF	74.2 PSF	311.90 LB-FT	180.2 LB	641.9 LB	665.4 LB
18 "	30 "	2790 in²	200.0 PSF	157.8 PSF	200.0 PSF	157.8 PSF	169.5 PSF	133.8 PSF	169.5 PSF	133.8 PSF	135.6 PSF	107.0 PSF	135.6 PSF	107.0 PSF	101.7 PSF	80.3 PSF	101.7 PSF	80.3 PSF	311.90 LB-FT	328.5 LB	902.8 LB	741.4 LB
24 "			159.1 PSF	125.6 PSF	159.1 PSF	125.6 PSF	132.6 PSF	104.7 PSF	132.6 PSF	104.7 PSF	106.1 PSF	83.7 PSF	106.1 PSF	83.7 PSF	79.5 PSF	62.8 PSF	79.5 PSF	62.8 PSF	311.90 LB-FT	256.9 LB	791.3 LB	717.9 LB
30 "			131.1 PSF	103.5 PSF	131.1 PSF	103.5 PSF	109.2 PSF	86.2 PSF	109.2 PSF	86.2 PSF	87.4 PSF	69.0 PSF	87.4 PSF	69.0 PSF	65.5 PSF	51.7 PSF	65.5 PSF	51.7 PSF	311.90 LB-FT	211.7 LB	720.5 LB	704.3 LB
36 "			111.6 PSF	88.1 PSF	111.6 PSF	88.1 PSF	93.0 PSF	73.4 PSF	93.0 PSF	73.4 PSF	74.4 PSF	58.7 PSF	74.4 PSF	58.7 PSF	55.8 PSF	44.0 PSF	55.8 PSF	44.0 PSF	311.90 LB-FT	180.2 LB	671.9 LB	695.4 LB
18 "	36 "	3780 in²	150.1 PSF	118.5 PSF	150.1 PSF	118.5 PSF	125.1 PSF	98.8 PSF	125.1 PSF	98.8 PSF	100.1 PSF	79.0 PSF	100.1 PSF	79.0 PSF	75.0 PSF	59.2 PSF	75.0 PSF	59.2 PSF	311.90 LB-FT	328.5 LB	959.8 LB	796.1 LB
24 "			117.4 PSF	92.7 PSF	117.4 PSF	92.7 PSF	97.9 PSF	77.2 PSF	97.9 PSF	77.2 PSF	78.3 PSF	61.8 PSF	78.3 PSF	61.8 PSF	58.7 PSF	46.3 PSF	58.7 PSF	46.3 PSF	311.90 LB-FT	256.9 LB	834.1 LB	760.7 LB
30 "			96.7 PSF	76.4 PSF	96.7 PSF	76.4 PSF	80.6 PSF	63.6 PSF	80.6 PSF	63.6 PSF	64.5 PSF	50.9 PSF	64.5 PSF	50.9 PSF	48.3 PSF	38.2 PSF	48.3 PSF	38.2 PSF	311.90 LB-FT	211.7 LB	755.7 LB	739.5 LB
36 "			82.4 PSF	65.0 PSF	82.4 PSF	65.0 PSF	68.6 PSF	54.2 PSF	68.6 PSF	54.2 PSF	54.9 PSF	43.3 PSF	54.9 PSF	43.3 PSF	41.2 PSF	32.5 PSF	41.2 PSF	32.5 PSF	311.90 LB-FT	180.2 LB	702.0 LB	725.5 LB
18 "	42 "	5040 in²	112.6 PSF	88.9 PSF	111.1 PSF	87.7 PSF	93.8 PSF	74.1 PSF	92.7 PSF	73.1 PSF	75.0 PSF	59.2 PSF	74.2 PSF	58.6 PSF	56.3 PSF	44.4 PSF	55.7 PSF	44.0 PSF	311.90 LB-FT	328.5 LB	1014.6 LB	850.9 LB
24 "			88.1 PSF	69.5 PSF	88.1 PSF	69.5 PSF	73.4 PSF	57.9 PSF	73.4 PSF	57.9 PSF	58.7 PSF	46.3 PSF	58.7 PSF	46.3 PSF	44.0 PSF	34.7 PSF	44.0 PSF	34.7 PSF	311.90 LB-FT	256.9 LB	876.9 LB	803.5 LB
30 "			72.5 PSF	57.3 PSF	72.5 PSF	57.3 PSF	60.4 PSF	47.7 PSF	60.4 PSF	47.7 PSF	48.3 PSF	38.2 PSF	48.3 PSF	38.2 PSF	36.2 PSF	28.6 PSF	36.2 PSF	28.6 PSF	311.90 LB-FT	211.7 LB	791.0 LB	774.8 LB
36 "			61.8 PSF	48.8 PSF	61.8 PSF	48.8 PSF	51.5 PSF	40.6 PSF	51.5 PSF	40.6 PSF	41.2 PSF	32.5 PSF	41.2 PSF	32.5 PSF	30.9 PSF	24.4 PSF	30.9 PSF	24.4 PSF	311.90 LB-FT	180.2 LB	732.0 LB	755.5 LB
18 "	48 "	6912 in²	82.1 PSF	64.8 PSF	79.7 PSF	62.9 PSF	68.4 PSF	54.0 PSF	66.5 PSF	52.5 PSF	54.7 PSF	43.2 PSF	53.2 PSF	42.0 PSF	41.0 PSF	32.4 PSF	40.0 PSF	31.5 PSF	311.90 LB-FT	328.5 LB	1069.3 LB	905.6 LB
24 "			64.2 PSF	50.7 PSF	64.2 PSF	50.7 PSF	53.5 PSF	42.2 PSF	53.5 PSF	42.2 PSF	42.8 PSF	33.8 PSF	42.8 PSF	33.8 PSF	32.1 PSF	25.3 PSF	32.1 PSF	25.3 PSF	311.90 LB-FT	256.9 LB	919.8 LB	846.4 LB
30 "			52.9 PSF	41.7 PSF	52.9 PSF	41.7 PSF	44.1 PSF	34.8 PSF	44.1 PSF	34.8 PSF	35.2 PSF	27.8 PSF	35.2 PSF	27.8 PSF	26.4 PSF	20.8 PSF	26.4 PSF	20.8 PSF	311.90 LB-FT	211.7 LB	826.3 LB	810.1 LB
36 "			45.0 PSF	35.5 PSF	45.0 PSF	35.5 PSF	37.5 PSF	29.6 PSF	37.5 PSF	29.6 PSF	30.0 PSF	23.7 PSF	30.0 PSF	23.7 PSF	22.5 PSF	17.7 PSF	22.5 PSF	17.7 PSF	311.90 LB-FT	180.2 LB	762.1 LB	785.6 LB

24" STAND DEPTH: MAX FACE AREA (1104in² - 4608in²), FRAME QUANTITY (2-5 FRAMES)

UNIT TO FRAME RATIO

STAND CLEAR HEIGHT	MAX MEAN UNIT HEIGHT	MAX FACE AREA	MAX FACE AREA : 5 FRAMES				MAX FACE AREA : 4 FRAMES				MAX FACE AREA : 3 FRAMES				MAX FACE AREA : 2 FRAMES				LOAD TRANSFER INFORMATION FOR USE WITH HOST STRUCTURE VERIFICATION ONLY			
			ANCHOR TYPE: 1 OR 4		ANCHORS TYPE: 2 OR 3		ANCHOR TYPE: 1 OR 4		ANCHORS TYPE: 2 OR 3		ANCHOR TYPE: 1 OR 4		ANCHORS TYPE: 2 OR 3		ANCHOR TYPE: 1 OR 4		ANCHORS TYPE: 2 OR 3					
			MAX ALLOWABLE LATERAL LOAD	MAX ALLOWABLE UPLIFT	MAX ALLOWABLE LATERAL LOAD	MAX ALLOWABLE UPLIFT	MAX ALLOWABLE LATERAL LOAD	MAX ALLOWABLE UPLIFT	MAX ALLOWABLE LATERAL LOAD	MAX ALLOWABLE UPLIFT	MAX ALLOWABLE LATERAL LOAD	MAX ALLOWABLE UPLIFT	MAX ALLOWABLE LATERAL LOAD	MAX ALLOWABLE UPLIFT	MAX ALLOWABLE LATERAL LOAD	MAX ALLOWABLE UPLIFT	MAX ALLOWABLE LATERAL LOAD	MAX ALLOWABLE UPLIFT	MAX. BASE MOMENT (M)	MAX. BASE SHEAR (V)	MAX. BASE UPLIFT (T)	MAX. BASE GRAVITY (C)
18 "	24 "	1104 in²	200.0 PSF	157.8 PSF	200.0 PSF	157.8 PSF	200.0 PSF	157.8 PSF	200.0 PSF	157.8 PSF	200.0 PSF	157.8 PSF	200.0 PSF	157.8 PSF	181.6 PSF	143.4 PSF	167.8 PSF	132.5 PSF	311.90 LB-FT	348.1 LB	1209.7 LB	1032.5 LB
24 "			200.0 PSF	157.8 PSF	200.0 PSF	157.8 PSF	200.0 PSF	157.8 PSF	200.0 PSF	157.8 PSF	200.0 PSF	157.8 PSF	200.0 PSF	157.8 PSF	141.0 PSF	111.3 PSF	141.0 PSF	111.3 PSF	311.90 LB-FT	270.4 LB	1069.9 LB	990.8 LB
30 "			200.0 PSF	157.8 PSF	200.0 PSF	157.8 PSF	200.0 PSF	157.8 PSF	200.0 PSF	157.8 PSF	173.3 PSF	136.8 PSF	173.3 PSF	136.8 PSF	115.5 PSF	91.2 PSF	115.5 PSF	91.2 PSF	311.90 LB-FT	221.4 LB	990.4 LB	965.7 LB
36 "			200.0 PSF	157.8 PSF	200.0 PSF	157.8 PSF	195.8 PSF	154.6 PSF	195.8 PSF	154.6 PSF	146.9 PSF	115.9 PSF	146.9 PSF	115.9 PSF	97.9 PSF	77.3 PSF	97.9 PSF	77.3 PSF	311.90 LB-FT	187.7 LB	934.7 LB	948.8 LB
18 "	30 "	1860 in²	200.0 PSF	157.8 PSF	200.0 PSF	157.8 PSF	200.0 PSF	157.8 PSF	193.9 PSF	153.1 PSF	161.7 PSF	127.6 PSF	145.6 PSF	114.9 PSF	107.8 PSF	85.1 PSF	97.3 PSF	76.8 PSF	311.90 LB-FT	348.1 LB	1304.3 LB	1119.5 LB
24 "			200.0 PSF	157.8 PSF	200.0 PSF	157.8 PSF	167.4 PSF	132.2 PSF	163.8 PSF	129.3 PSF	125.6 PSF	99.1 PSF	123.0 PSF	97.1 PSF	83.7 PSF	66.1 PSF	82.2 PSF	64.9 PSF	311.90 LB-FT	270.4 LB	1148.7 LB	1058.4 LB
30 "			171.4 PSF	135.3 PSF	171.4 PSF	135.3 PSF	137.1 PSF	108.3 PSF	137.1 PSF	108.3 PSF	102.8 PSF	81.2 PSF	102.8 PSF	81.2 PSF	68.5 PSF	54.1 PSF	68.5 PSF	54.1 PSF	311.90 LB-FT	221.4 LB	1051.8 LB	1021.0 LB
36 "			145.3 PSF	114.7 PSF	145.3 PSF	114.7 PSF	116.2 PSF	91.7 PSF	116.2 PSF	91.7 PSF	87.1 PSF	68.8 PSF	87.1 PSF	68.8 PSF	58.1 PSF	45.8 PSF	58.1 PSF	45.8 PSF	311.90 LB-FT	187.7 LB	983.9 LB	995.8 LB
18 "	36 "	2520 in²	198.9 PSF	157.0 PSF	174.7 PSF	137.9 PSF	159.1 PSF	125.6 PSF	139.8 PSF	110.4 PSF	119.3 PSF	94.2 PSF	105.0 PSF	82.9 PSF	79.5 PSF	62.8 PSF	70.1 PSF	55.4 PSF	311.90 LB-FT	348.1 LB	1397.3 LB	1206.5 LB
24 "			154.5 PSF	122.0 PSF	148.1 PSF	116.9 PSF	123.6 PSF	97.6 PSF	118.6 PSF	93.6 PSF	92.7 PSF	73.2 PSF	89.0 PSF	70.3 PSF	61.8 PSF	48.8 PSF	59.5 PSF	46.9 PSF	311.90 LB-FT	270.4 LB	1218.6 LB	1126.0 LB
30 "			126.5 PSF	99.9 PSF	126.5 PSF	99.9 PSF	101.2 PSF	79.9 PSF	101.2 PSF	79.9 PSF	75.9 PSF	59.9 PSF	75.9 PSF	59.9 PSF	50.6 PSF	39.9 PSF	50.6 PSF	39.9 PSF	311.90 LB-FT	221.4 LB	1107.2 LB	1076.4 LB
36 "			107.2 PSF	84.6 PSF	107.2 PSF	84.6 PSF	85.8 PSF	67.7 PSF	85.8 PSF	67.7 PSF	64.3 PSF	50.8 PSF	64.3 PSF	50.8 PSF	42.9 PSF	33.8 PSF	42.9 PSF	33.8 PSF	311.90 LB-FT	187.7 LB	1030.8 LB	1042.7 LB
18 "	42 "	3360 in²	149.2 PSF	117.7 PSF	128.1 PSF	101.1 PSF	119.3 PSF	94.2 PSF	102.5 PSF	80.9 PSF	89.5 PSF	70.6 PSF	77.0 PSF	60.7 PSF	59.6 PSF	47.1 PSF	51.4 PSF	40.6 PSF	311.90 LB-FT	348.1 LB	1484.3 LB	1293.6 LB
24 "			115.9 PSF	91.5 PSF	109.0 PSF	86.0 PSF	92.7 PSF	73.2 PSF	87.2 PSF	68.8 PSF	69.5 PSF	54.9 PSF	65.5 PSF	51.7 PSF	46.3 PSF	36.6 PSF	43.7 PSF	34.5 PSF	311.90 LB-FT	270.4 LB	1286.2 LB	1193.6 LB
30 "			94.9 PSF	74.9 PSF	94.9 PSF	74.9 PSF	75.9 PSF	59.9 PSF	75.9 PSF	59.9 PSF	56.9 PSF	44.9 PSF	56.9 PSF	44.9 PSF	37.9 PSF	29.9 PSF	37.9 PSF	29.9 PSF	311.90 LB-FT	221.4 LB	1162.6 LB	1131.8 LB
36 "			80.4 PSF	63.5 PSF	80.4 PSF	63.5 PSF	64.3 PSF	50.8 PSF	64.3 PSF	50.8 PSF	48.2 PSF	38.1 PSF	48.2 PSF	38.1 PSF	32.1 PSF	25.4 PSF	32.1 PSF	25.4 PSF	311.90 LB-FT	187.7 LB	1077.8 LB	1089.6 LB
18 "	48 "	4608 in²	108.7 PSF	85.8 PSF	91.3 PSF	72.1 PSF	87.0 PSF	68.7 PSF	73.1 PSF	57.7 PSF	65.2 PSF	51.5 PSF	54.9 PSF	43.3 PSF	43.5 PSF	34.3 PSF	36.6 PSF	28.9 PSF	311.90 LB-FT	348.1 LB	1571.4 LB	1380.6 LB
24 "			84.5 PSF	66.7 PSF	77.9 PSF	61.5 PSF	67.6 PSF	53.3 PSF	62.4 PSF	49.2 PSF	50.7 PSF	40.0 PSF	46.8 PSF	37.0 PSF	33.8 PSF	26.6 PSF	31.3 PSF	24.7 PSF	311.90 LB-FT	270.4 LB	1353.8 LB	1261.2 LB
30 "			69.2 PSF	54.6 PSF	68.1 PSF	53.7 PSF	55.3 PSF	43.7 PSF	54.5 PSF	43.0 PSF	41.5 PSF	32.7 PSF	40.9 PSF	32.3 PSF	27.6 PSF	21.8 PSF	27.3 PSF	21.5 PSF	311.90 LB-FT	221.4 LB	1217.9 LB	1187.1 LB
36 "			58.6 PSF	46.3 PSF	58.6 PSF	46.3 PSF	46.9 PSF	37.0 PSF	46.9 PSF	37.0 PSF	35.1 PSF	27.7 PSF	35.1 PSF	27.7 PSF	23.4 PSF	18.5 PSF	23.4 PSF	18.5 PSF	311.90 LB-FT	187.7 LB	1124.7 LB	1136.6 LB

36" STAND DEPTH: MAX FACE AREA (1104in² - 4608in²), FRAME QUANTITY (2-5 FRAMES)

UNIT TO FRAME RATIO

STAND CLEAR HEIGHT	MAX MEAN UNIT HEIGHT	MAX FACE AREA	MAX FACE AREA : 5 FRAMES				MAX FACE AREA : 4 FRAMES				MAX FACE AREA : 3 FRAMES				MAX FACE AREA : 2 FRAMES				LOAD TRANSFER INFORMATION FOR USE WITH HOST STRUCTURE VERIFICATION ONLY			
			ANCHOR TYPE: 1 OR 4		ANCHORS TYPE: 2 OR 3		ANCHOR TYPE: 1 OR 4		ANCHORS TYPE: 2 OR 3		ANCHOR TYPE: 1 OR 4		ANCHORS TYPE: 2 OR 3		ANCHOR TYPE: 1 OR 4		ANCHORS TYPE: 2 OR 3					
			MAX ALLOWABLE LATERAL LOAD	MAX ALLOWABLE UPLIFT	MAX ALLOWABLE LATERAL LOAD	MAX ALLOWABLE UPLIFT	MAX ALLOWABLE LATERAL LOAD	MAX ALLOWABLE UPLIFT	MAX ALLOWABLE LATERAL LOAD	MAX ALLOWABLE UPLIFT	MAX ALLOWABLE LATERAL LOAD	MAX ALLOWABLE UPLIFT	MAX ALLOWABLE LATERAL LOAD	MAX ALLOWABLE UPLIFT	MAX ALLOWABLE LATERAL LOAD	MAX ALLOWABLE UPLIFT	MAX ALLOWABLE LATERAL LOAD	MAX ALLOWABLE UPLIFT	MAX. BASE MOMENT (M)	MAX. BASE SHEAR (V)	MAX. BASE UPLIFT (T)	MAX. BASE GRAVITY (C)
18 "	24 "	1104 in²	200.0 PSF	157.8 PSF	200.0 PSF	157.8 PSF	200.0 PSF	157.8 PSF	200.0 PSF	157.8 PSF	200.0 PSF	157.8 PSF	200.0 PSF	157.8 PSF	171.3 PSF	135.3 PSF	171.3 PSF	135.3 PSF	311.90 LB-FT	328.5 LB	839.1 LB	686.6 LB
24 "			200.0 PSF	157.8 PSF	200.0 PSF	157.8 PSF	200.0 PSF	157.8 PSF	200.0 PSF	157.8 PSF	200.0 PSF	157.8 PSF	200.0 PSF	157.8 PSF	134.0 PSF	105.8 PSF	134.0 PSF	105.8 PSF	311.90 LB-FT	256.9 LB	740.4 LB	675.0 LB
30 "			200.0 PSF	157.8 PSF	200.0 PSF	157.8 PSF	200.0 PSF	157.8 PSF	200.0 PSF	157.8 PSF	165.6 PSF	130.8 PSF	165.6 PSF	130.8 PSF	110.4 PSF	87.2 PSF	110.4 PSF	87.2 PSF	311.90 LB-FT	211.7 LB	681.4 LB	669.0 LB
36 "			200.0 PSF	157.8 PSF	200.0 PSF	157.8 PSF	188.1 PSF	148.5 PSF	188.1 PSF	148.5 PSF	141.0 PSF	111.3 PSF	141.0 PSF	111.3 PSF	94.0 PSF	74.2 PSF	94.0 PSF	74.2 PSF	311.90 LB-FT	180.2 LB	641.9 LB	665.4 LB
18 "	30 "	1860 in²	200.0 PSF	157.8 PSF	200.0 PSF	157.8 PSF	200.0 PSF	157.8 PSF	200.0 PSF	157.8 PSF	152.5 PSF	120.4 PSF	152.5 PSF	120.4 PSF	101.7 PSF	80.3 PSF	101.7 PSF	80.3 PSF	311.90 LB-FT	328.5 LB	901.3 LB	741.4 LB
24 "			198.9 PSF	157.0 PSF	198.9 PSF	157.0 PSF	159.1 PSF	125.6 PSF	159.1 PSF	125.6 PSF	119.3 PSF	94.2 PSF	119.3 PSF	94.2 PSF	79.5 PSF	62.8 PSF	79.5 PSF	62.8 PSF	311.90 LB-FT	256.9 LB	793.5 LB	717.9 LB
30 "			163.9 PSF	129.4 PSF	163.9 PSF	129.4 PSF	131.1 PSF	103.5 PSF	131.1 PSF	103.5 PSF	98.3 PSF	77.6 PSF	98.3 PSF	77.6 PSF	65.5 PSF	51.7 PSF	65.5 PSF	51.7 PSF	311.90 LB-FT	211.7 LB	722.7 LB	704.3 LB
36 "			139.5 PSF	110.1 PSF	139.5 PSF	110.1 PSF	111.6 PSF	88.1 PSF	111.6 PSF	88.1 PSF	83.7 PSF	66.1 PSF	83.7 PSF	66.1 PSF	55.8 PSF	44.0 PSF	55.8 PSF	44.0 PSF	311.90 LB-FT	180.2 LB	674.2 LB	695.4 LB
18 "	36 "	2520 in²	187.7 PSF	148.2 PSF	187.7 PSF	148.2 PSF	150.1 PSF	118.5 PSF	150.1 PSF	118.5 PSF	112.6 PSF	88.9 PSF	112.6 PSF	88.9 PSF	75.0 PSF	59.2 PSF	75.0 PSF	59.2 PSF	311.90 LB-FT	328.5 LB	962.1 LB	796.1 LB
24 "			146.8 PSF	115.9 PSF	146.8 PSF	115.9 PSF	117.4 PSF	92.7 PSF	117.4 PSF	92.7 PSF	88.1 PSF	69.5 PSF	88.1 PSF	69.5 PSF	58.7 PSF	46.3 PSF	58.7 PSF	46.3 PSF	311.90 LB-FT	256.9 LB	836.3 LB	760.7 LB
30 "			120.9 PSF	95.5 PSF	120.9 PSF	95.5 PSF	96.7 PSF	76.4 PSF	96.7 PSF	76.4 PSF	72.5 PSF	57.3 PSF	72.5 PSF	57.3 PSF	48.3 PSF	38.2 PSF	48.3 PSF	38.2 PSF	311.90 LB-FT	211.7 LB	758.0 LB	739.5 LB
36 "			103.0 PSF	81.3 PSF	103.0 PSF	81.3 PSF	82.4 PSF	65.0 PSF	82.4 PSF	65.0 PSF	61.8 PSF	48.8 PSF	61.8 PSF	48.8 PSF	41.2 PSF	32.5 PSF	41.2 PSF	32.5 PSF	311.90 LB-FT	180.2 LB	704.2 LB	725.5 LB
18 "	42 "	3360 in²	140.7 PSF	111.1 PSF	138.8 PSF	109.6 PSF	112.6 PSF	88.9 PSF	111.1 PSF	87.7 PSF	84.4 PSF	66.6 PSF	83.4 PSF	65.9 PSF	56.3 PSF	44.4 PSF	55.7 PSF	44.0 PSF	311.90 LB-FT	328.5 LB	1016.8 LB	850.9 LB
24 "			110.1 PSF	86.9 PSF	110.1 PSF	86.9 PSF	88.1 PSF	69.5 PSF	88.1 PSF	69.5 PSF	66.0 PSF	52.1 PSF	66.0 PSF	52.1 PSF	44.0 PSF	34.7 PSF	44.0 PSF	34.7 PSF	311.90 LB-FT	256.9 LB	879.2 LB	803.5 LB
30 "			90.7 PSF	71.6 PSF	90.7 PSF	71.6 PSF	72.5 PSF	57.3 PSF	72.5 PSF	57.3 PSF	54.4 PSF	42.9 PSF	54.4 PSF	42.9 PSF	36.2 PSF	28.6 PSF	36.2 PSF	28.6 PSF	311.90 LB-FT	211.7 LB	793.3 LB	774.8 LB
36 "			77.2 PSF	61.0 PSF	77.2 PSF	61.0 PSF	61.8 PSF	48.8 PSF	61.8 PSF	48.8 PSF	46.3 PSF	36.6 PSF	46.3 PSF	36.6 PSF	30.9 PSF	24.4 PSF	30.9 PSF	24.4 PSF	311.90 LB-FT	180.2 LB	734.3 LB	755.5 LB
18 "	48 "	4608 in²	102.6 PSF	81.0 PSF	99.6 PSF	78.6 PSF	82.1 PSF	64.8 PSF	79.7 PSF	62.9 PSF	61.5 PSF	48.6 PSF	59.8 PSF	47.2 PSF	41.0 PSF	32.4 PSF	40.0 PSF	31.5 PSF	311.90 LB-FT	328.5 LB	1071.6 LB	905.6 LB
24 "			80.3 PSF	63.4 PSF	80.3 PSF	63.4 PSF	64.2 PSF	50.7 PSF	64.2 PSF	50.7 PSF	48.1 PSF	38.0 PSF	48.1 PSF	38.0 PSF	32.1 PSF	25.3 PSF	32.1 PSF	25.3 PSF	311.90 LB-FT	256.9 LB	922.0 LB	846.4 LB
30 "			66.1 PSF	52.2 PSF	66.1 PSF	52.2 PSF	52.9 PSF	41.7 PSF	52.9 PSF	41.7 PSF	39.6 PSF	31.3 PSF	39.6 PSF	31.3 PSF	26.4 PSF	20.8 PSF	26.4 PSF	20.8 PSF	311.90 LB-FT	211.7 LB	828.6 LB	810.1 LB
36 "			56.3 PSF	44.4 PSF	56.3 PSF	44.4 PSF	45.0 PSF	35.5 PSF	45.0 PSF	35.5 PSF	33.8 PSF	26.6 PSF	33.8 PSF	26.6 PSF	22.5 PSF	17.7 PSF	22.5 PSF	17.7 PSF	311.90 LB-FT	180.2 LB	764.3 LB	785.6 LB

FL 16921.1

ENGINEERING EXPRESS®
POSTAL ADDRESS:
2234 NORTH FEDERAL HWY #7664
BOCA RATON, FL 33431
ENGINEERINGEXPRESS.COM

PRECISION ALUMINUM PRODUCTS, INC.
1339 SW 1ST WAY
DEERFIELD BEACH, FL 33441
(954) 480-6919

ALUMINUM A/C STANDS
FLORIDA BUILDING CODE EIGHTH EDITION (2023)
FLORIDA STATEWIDE APPROVAL (FSA FL# 16921.1)

REMARKS	DRWN	CHKD	DATE
PREV. SUBMITTAL (20-32768)	CSL	RWN	12/15/20
2023 FBC UPDATE & TECH. CHANGES	MRT	RWN	12/08/23

COPYRIGHT ENGINEERING EXPRESS®

23-69401

SCALE: NTS UNLESS NOTED

12/21/2023 1:55 PM MILTON c:\users\milton\engineering express\production - documents\projects\23-123-69401 2023 product fbc update fl16921\work\2023 fbc\drawings & cad\23-69401c - fl16921.1 - cad.dwg

"XHD" STAND DESIGN SCHEDULE CONTINUED

DESIGN SCHEDULES NOTES:

1. DESIGN SCHEDULES SHOWN HEREIN ARE REFERENCED TO ALLOWABLE STRENGTH DESIGN (ASD) METHODOLOGY.

2. EMPTY CELLS DENOTES CONDITIONS NOT ALLOWED TO USE.

3. MAXIMUM CALCULATED FACE AREA SHALL BE EQUAL TO OR LESS THAN THE MAXIMUM ALLOWABLE FACE AREA FOR EACH CONFIGURATION.

4. REFERENCE ANCHOR SCHEDULE FOR ANCHOR TYPES LISTED HEREIN.

24" STAND DEPTH: MAX FACE AREA (552in² - 2304in²), FRAME QUANTITY (2-3 FRAMES)

STAND CLEAR HEIGHT	MAX MEAN UNIT HEIGHT	MAX FACE AREA	UNIT TO FRAME RATIO: MAX FACE AREA : 3 FRAMES, ANCHOR TYPE: 1 OR 4 — MAX ALLOWABLE LATERAL LOAD	MAX ALLOWABLE UPLIFT	ANCHOR TYPE: 2 OR 3 — MAX ALLOWABLE LATERAL LOAD	MAX ALLOWABLE UPLIFT	MAX FACE AREA : 2 FRAMES, ANCHOR TYPE: 1 OR 4 — MAX ALLOWABLE LATERAL LOAD	MAX ALLOWABLE UPLIFT	ANCHOR TYPE: 2 OR 3 — MAX ALLOWABLE LATERAL LOAD	MAX ALLOWABLE UPLIFT	LOAD TRANSFER INFORMATION FOR USE WITH HOST STRUCTURE VERIFICATION ONLY: MAX. BASE MOMENT (M)	MAX. BASE SHEAR (V)	MAX. BASE UPLIFT (T)	MAX. BASE GRAVITY (C)
18 "	24 "	552 in²	200.0 PSF	157.8 PSF	200.0 PSF	157.8 PSF	200.0 PSF	157.8 PSF	200.0 PSF	157.8 PSF	171.70 LB-FT	191.6 LB	667.1 LB	556.2 LB
24 "			200.0 PSF	157.8 PSF	200.0 PSF	157.8 PSF	200.0 PSF	157.8 PSF	200.0 PSF	157.8 PSF	221.00 LB-FT	191.6 LB	762.9 LB	652.1 LB
30 "			200.0 PSF	157.8 PSF	200.0 PSF	157.8 PSF	200.0 PSF	157.8 PSF	200.0 PSF	157.8 PSF	269.90 LB-FT	191.6 LB	858.8 LB	747.9 LB
36 "			200.0 PSF	157.8 PSF	200.0 PSF	157.8 PSF	195.8 PSF	154.6 PSF	195.8 PSF	154.6 PSF	311.90 LB-FT	187.7 LB	934.7 LB	828.8 LB
18 "	30 "	930 in²	200.0 PSF	157.8 PSF	200.0 PSF	157.8 PSF	200.0 PSF	157.8 PSF	193.9 PSF	153.1 PSF	289.30 LB-FT	322.9 LB	1212.4 LB	935.7 LB
24 "			200.0 PSF	157.8 PSF	200.0 PSF	157.8 PSF	167.4 PSF	132.2 PSF	163.8 PSF	129.3 PSF	311.90 LB-FT	270.4 LB	1148.7 LB	938.4 LB
30 "			200.0 PSF	157.8 PSF	200.0 PSF	157.8 PSF	137.1 PSF	108.3 PSF	137.1 PSF	108.3 PSF	311.90 LB-FT	221.4 LB	1049.6 LB	901.0 LB
36 "			174.3 PSF	137.6 PSF	174.3 PSF	137.6 PSF	116.2 PSF	91.7 PSF	116.2 PSF	91.7 PSF	311.90 LB-FT	187.7 LB	985.4 LB	875.8 LB
18 "	36 "	1260 in²	200.0 PSF	157.8 PSF	200.0 PSF	157.8 PSF	159.1 PSF	125.6 PSF	139.8 PSF	110.4 PSF	311.90 LB-FT	348.1 LB	1395.1 LB	1086.5 LB
24 "			185.4 PSF	146.4 PSF	177.7 PSF	140.3 PSF	123.6 PSF	97.6 PSF	118.6 PSF	93.6 PSF	311.90 LB-FT	270.4 LB	1220.1 LB	1006.0 LB
30 "			151.8 PSF	119.9 PSF	151.8 PSF	119.9 PSF	101.2 PSF	79.9 PSF	101.2 PSF	79.9 PSF	311.90 LB-FT	221.4 LB	1108.7 LB	956.4 LB
36 "			128.7 PSF	101.6 PSF	128.7 PSF	101.6 PSF	85.8 PSF	67.7 PSF	85.8 PSF	67.7 PSF	311.90 LB-FT	187.7 LB	1032.3 LB	922.7 LB
18 "	42 "	1680 in²	179.0 PSF	141.3 PSF	153.6 PSF	121.3 PSF	119.3 PSF	94.2 PSF	102.5 PSF	80.9 PSF	311.90 LB-FT	348.1 LB	1485.8 LB	1173.6 LB
24 "			139.0 PSF	109.8 PSF	130.7 PSF	103.2 PSF	92.7 PSF	73.2 PSF	87.2 PSF	68.8 PSF	311.90 LB-FT	270.4 LB	1287.7 LB	1073.6 LB
30 "			113.9 PSF	89.9 PSF	113.8 PSF	89.9 PSF	75.9 PSF	59.9 PSF	75.9 PSF	59.9 PSF	311.90 LB-FT	221.4 LB	1164.1 LB	1011.8 LB
36 "			96.5 PSF	76.2 PSF	96.5 PSF	76.2 PSF	64.3 PSF	50.8 PSF	64.3 PSF	50.8 PSF	311.90 LB-FT	187.7 LB	1079.3 LB	969.6 LB
18 "	48 "	2304 in²	130.5 PSF	103.0 PSF	109.5 PSF	86.5 PSF	87.0 PSF	68.7 PSF	73.1 PSF	57.7 PSF	311.90 LB-FT	348.1 LB	1572.9 LB	1260.6 LB
24 "			101.4 PSF	80.0 PSF	93.5 PSF	73.8 PSF	67.6 PSF	53.3 PSF	62.4 PSF	49.2 PSF	311.90 LB-FT	270.4 LB	1355.3 LB	1141.2 LB
30 "			83.0 PSF	65.5 PSF	81.6 PSF	64.4 PSF	55.3 PSF	43.7 PSF	54.5 PSF	43.0 PSF	311.90 LB-FT	221.4 LB	1219.4 LB	1067.1 LB
36 "			70.3 PSF	55.5 PSF	70.3 PSF	55.5 PSF	46.9 PSF	37.0 PSF	46.9 PSF	37.0 PSF	311.90 LB-FT	187.7 LB	1126.2 LB	1016.6 LB

36" STAND DEPTH: MAX FACE AREA (552in² - 2304in²), FRAME QUANTITY (2-3 FRAMES)

STAND CLEAR HEIGHT	MAX MEAN UNIT HEIGHT	MAX FACE AREA	UNIT TO FRAME RATIO: MAX FACE AREA : 3 FRAMES, ANCHOR TYPE: 1 OR 4 — MAX ALLOWABLE LATERAL LOAD	MAX ALLOWABLE UPLIFT	ANCHOR TYPE: 2 OR 3 — MAX ALLOWABLE LATERAL LOAD	MAX ALLOWABLE UPLIFT	MAX FACE AREA : 2 FRAMES, ANCHOR TYPE: 1 OR 4 — MAX ALLOWABLE LATERAL LOAD	MAX ALLOWABLE UPLIFT	ANCHOR TYPE: 2 OR 3 — MAX ALLOWABLE LATERAL LOAD	MAX ALLOWABLE UPLIFT	LOAD TRANSFER INFORMATION FOR USE WITH HOST STRUCTURE VERIFICATION ONLY: MAX. BASE MOMENT (M)	MAX. BASE SHEAR (V)	MAX. BASE UPLIFT (T)	MAX. BASE GRAVITY (C)
18 "	24 "	552 in²	200.0 PSF	157.8 PSF	200.0 PSF	157.8 PSF	200.0 PSF	157.8 PSF	200.0 PSF	157.8 PSF	181.90 LB-FT	191.6 LB	491.4 LB	380.5 LB
24 "			200.0 PSF	157.8 PSF	200.0 PSF	157.8 PSF	200.0 PSF	157.8 PSF	200.0 PSF	157.8 PSF	232.60 LB-FT	191.6 LB	555.3 LB	444.4 LB
30 "			200.0 PSF	157.8 PSF	200.0 PSF	157.8 PSF	200.0 PSF	157.8 PSF	200.0 PSF	157.8 PSF	282.30 LB-FT	191.6 LB	619.2 LB	508.3 LB
36 "			200.0 PSF	157.8 PSF	200.0 PSF	157.8 PSF	188.1 PSF	148.5 PSF	188.1 PSF	148.5 PSF	311.90 LB-FT	180.2 LB	641.9 LB	545.4 LB
18 "	30 "	930 in²	200.0 PSF	157.8 PSF	200.0 PSF	157.8 PSF	200.0 PSF	157.8 PSF	200.0 PSF	157.8 PSF	306.60 LB-FT	322.9 LB	889.5 LB	612.8 LB
24 "			200.0 PSF	157.8 PSF	200.0 PSF	157.8 PSF	159.1 PSF	125.6 PSF	159.1 PSF	125.6 PSF	311.90 LB-FT	256.9 LB	791.3 LB	597.9 LB
30 "			196.6 PSF	155.2 PSF	196.6 PSF	155.2 PSF	131.1 PSF	103.5 PSF	131.1 PSF	103.5 PSF	311.90 LB-FT	211.7 LB	724.2 LB	584.3 LB
36 "			167.4 PSF	132.2 PSF	167.4 PSF	132.2 PSF	111.6 PSF	88.1 PSF	111.6 PSF	88.1 PSF	311.90 LB-FT	180.2 LB	675.7 LB	575.4 LB
18 "	36 "	1260 in²	200.0 PSF	157.8 PSF	200.0 PSF	157.8 PSF	150.1 PSF	118.5 PSF	150.1 PSF	118.5 PSF	311.90 LB-FT	328.5 LB	959.8 LB	676.1 LB
24 "			176.2 PSF	139.1 PSF	176.2 PSF	139.1 PSF	117.4 PSF	92.7 PSF	117.4 PSF	92.7 PSF	311.90 LB-FT	256.9 LB	837.8 LB	640.7 LB
30 "			145.1 PSF	114.6 PSF	145.1 PSF	114.6 PSF	96.7 PSF	76.4 PSF	96.7 PSF	76.4 PSF	311.90 LB-FT	211.7 LB	759.5 LB	619.5 LB
36 "			123.6 PSF	97.6 PSF	123.6 PSF	97.6 PSF	82.4 PSF	65.0 PSF	82.4 PSF	65.0 PSF	311.90 LB-FT	180.2 LB	705.7 LB	605.5 LB
18 "	42 "	1680 in²	168.9 PSF	133.3 PSF	166.5 PSF	131.5 PSF	112.6 PSF	88.9 PSF	111.1 PSF	87.7 PSF	311.90 LB-FT	328.5 LB	1018.3 LB	730.9 LB
24 "			132.1 PSF	104.3 PSF	132.1 PSF	104.3 PSF	88.1 PSF	69.5 PSF	88.1 PSF	69.5 PSF	311.90 LB-FT	256.9 LB	880.7 LB	683.5 LB
30 "			108.8 PSF	85.9 PSF	108.8 PSF	85.9 PSF	72.5 PSF	57.3 PSF	72.5 PSF	57.3 PSF	311.90 LB-FT	211.7 LB	794.8 LB	654.8 LB
36 "			92.7 PSF	73.2 PSF	92.7 PSF	73.2 PSF	61.8 PSF	48.8 PSF	61.8 PSF	48.8 PSF	311.90 LB-FT	180.2 LB	735.8 LB	635.5 LB
18 "	48 "	2304 in²	123.1 PSF	97.2 PSF	119.5 PSF	94.3 PSF	82.1 PSF	64.8 PSF	79.7 PSF	62.9 PSF	311.90 LB-FT	328.5 LB	1073.1 LB	785.6 LB
24 "			96.3 PSF	76.0 PSF	96.3 PSF	76.0 PSF	64.2 PSF	50.7 PSF	64.2 PSF	50.7 PSF	311.90 LB-FT	256.9 LB	923.5 LB	726.4 LB
30 "			79.3 PSF	62.6 PSF	79.3 PSF	62.6 PSF	52.9 PSF	41.7 PSF	52.9 PSF	41.7 PSF	311.90 LB-FT	211.7 LB	830.1 LB	690.1 LB
36 "			67.6 PSF	53.3 PSF	67.6 PSF	53.3 PSF	45.0 PSF	35.5 PSF	45.0 PSF	35.5 PSF	311.90 LB-FT	180.2 LB	765.8 LB	665.6 LB

"FIXED HD" STAND DESIGN SCHEDULE

48" STAND DEPTH: MAX FACE AREA (2760in² - 11520in²), FRAME QUANTITY (5-8 FRAMES)

STAND CLEAR HEIGHT	MAX MEAN UNIT HEIGHT	MAX FACE AREA	UNIT TO FRAME RATIO: MAX FACE AREA : 8 FRAMES, ANCHOR TYPE: 1 OR 4 — MAX ALLOWABLE LATERAL LOAD	MAX ALLOWABLE UPLIFT	ANCHORS TYPE: 2 OR 3 — MAX ALLOWABLE LATERAL LOAD	MAX ALLOWABLE UPLIFT	MAX FACE AREA : 7 FRAMES, ANCHOR TYPE: 1 OR 4 — MAX ALLOWABLE LATERAL LOAD	MAX ALLOWABLE UPLIFT	ANCHORS TYPE: 2 OR 3 — MAX ALLOWABLE LATERAL LOAD	MAX ALLOWABLE UPLIFT	MAX FACE AREA : 6 FRAMES, ANCHOR TYPE: 1 OR 4 — MAX ALLOWABLE LATERAL LOAD	MAX ALLOWABLE UPLIFT	ANCHORS TYPE: 2 OR 3 — MAX ALLOWABLE LATERAL LOAD	MAX ALLOWABLE UPLIFT	MAX FACE AREA : 5 FRAMES, ANCHOR TYPE: 1 OR 4 — MAX ALLOWABLE LATERAL LOAD	MAX ALLOWABLE UPLIFT	ANCHORS TYPE: 2 OR 3 — MAX ALLOWABLE LATERAL LOAD	MAX ALLOWABLE UPLIFT	LOAD TRANSFER INFORMATION FOR USE WITH HOST STRUCTURE VERIFICATION ONLY: MAX. BASE MOMENT (M)	MAX. BASE SHEAR (V)	MAX. BASE UPLIFT (T)	MAX. BASE GRAVITY (C)
18 "	24 "	2760 in²	200.0 PSF	157.8 PSF	200.0 PSF	157.8 PSF	193.7 PSF	152.9 PSF	193.7 PSF	152.9 PSF	166.0 PSF	131.0 PSF	166.0 PSF	131.0 PSF	138.3 PSF	109.2 PSF	138.3 PSF	109.2 PSF	247.00 LB-FT	265.2 LB	558.0 LB	374.0 LB
24 "			172.8 PSF	136.4 PSF	172.8 PSF	136.4 PSF	151.2 PSF	119.4 PSF	151.2 PSF	119.4 PSF	129.6 PSF	102.3 PSF	129.6 PSF	102.3 PSF	108.0 PSF	85.2 PSF	108.0 PSF	85.2 PSF	247.00 LB-FT	207.0 LB	485.8 LB	373.3 LB
30 "			142.1 PSF	112.2 PSF	142.1 PSF	112.2 PSF	124.3 PSF	98.1 PSF	124.3 PSF	98.1 PSF	106.6 PSF	84.1 PSF	106.6 PSF	84.1 PSF	88.8 PSF	70.1 PSF	88.8 PSF	70.1 PSF	247.00 LB-FT	170.2 LB	439.6 LB	373.6 LB
36 "			120.8 PSF	95.4 PSF	120.8 PSF	95.4 PSF	105.7 PSF	83.4 PSF	105.7 PSF	83.4 PSF	90.6 PSF	71.5 PSF	90.6 PSF	71.5 PSF	75.5 PSF	59.6 PSF	75.5 PSF	59.6 PSF	247.00 LB-FT	144.7 LB	407.9 LB	374.0 LB
18 "	30 "	4650 in²	131.4 PSF	103.7 PSF	131.4 PSF	103.7 PSF	114.9 PSF	90.7 PSF	114.9 PSF	90.7 PSF	98.5 PSF	77.8 PSF	98.5 PSF	77.8 PSF	82.1 PSF	64.8 PSF	82.1 PSF	64.8 PSF	247.00 LB-FT	265.2 LB	593.1 LB	407.2 LB
24 "			102.5 PSF	80.9 PSF	102.5 PSF	80.9 PSF	89.7 PSF	70.8 PSF	89.7 PSF	70.8 PSF	76.9 PSF	60.7 PSF	76.9 PSF	60.7 PSF	64.1 PSF	50.6 PSF	64.1 PSF	50.6 PSF	247.00 LB-FT	207.0 LB	511.7 LB	399.2 LB
30 "			84.3 PSF	66.6 PSF	84.3 PSF	66.6 PSF	73.8 PSF	58.2 PSF	73.8 PSF	58.2 PSF	63.2 PSF	49.9 PSF	63.2 PSF	49.9 PSF	52.7 PSF	41.6 PSF	52.7 PSF	41.6 PSF	247.00 LB-FT	170.2 LB	460.9 LB	394.9 LB
36 "			71.7 PSF	56.6 PSF	71.7 PSF	56.6 PSF	62.7 PSF	49.5 PSF	62.7 PSF	49.5 PSF	53.8 PSF	42.4 PSF	53.8 PSF	42.4 PSF	44.8 PSF	35.3 PSF	44.8 PSF	35.3 PSF	247.00 LB-FT	144.7 LB	426.0 LB	392.1 LB
18 "	36 "	6300 in²	96.9 PSF	76.5 PSF	96.9 PSF	76.5 PSF	84.8 PSF	67.0 PSF	84.8 PSF	67.0 PSF	72.7 PSF	57.4 PSF	72.7 PSF	57.4 PSF	60.6 PSF	47.8 PSF	60.6 PSF	47.8 PSF	247.00 LB-FT	265.2 LB	626.3 LB	440.3 LB
24 "			75.7 PSF	59.7 PSF	75.7 PSF	59.7 PSF	66.2 PSF	52.3 PSF	66.2 PSF	52.3 PSF	56.7 PSF	44.8 PSF	56.7 PSF	44.8 PSF	47.3 PSF	37.3 PSF	47.3 PSF	37.3 PSF	247.00 LB-FT	207.0 LB	537.6 LB	425.1 LB
30 "			62.2 PSF	49.1 PSF	62.2 PSF	49.1 PSF	54.4 PSF	43.0 PSF	54.4 PSF	43.0 PSF	46.7 PSF	36.8 PSF	46.7 PSF	36.8 PSF	38.9 PSF	30.7 PSF	38.9 PSF	30.7 PSF	247.00 LB-FT	170.2 LB	482.2 LB	416.1 LB
36 "			52.9 PSF	41.8 PSF	52.9 PSF	41.8 PSF	46.3 PSF	36.5 PSF	46.3 PSF	36.5 PSF	39.7 PSF	31.3 PSF	39.7 PSF	31.3 PSF	33.0 PSF	26.1 PSF	33.0 PSF	26.1 PSF	247.00 LB-FT	144.7 LB	444.1 LB	410.2 LB
18 "	42 "	8400 in²	72.7 PSF	57.4 PSF	72.7 PSF	57.4 PSF	63.6 PSF	50.2 PSF	63.6 PSF	50.2 PSF	54.5 PSF	43.0 PSF	54.5 PSF	43.0 PSF	45.4 PSF	35.8 PSF	45.4 PSF	35.8 PSF	247.00 LB-FT	265.2 LB	659.4 LB	473.5 LB
24 "			56.7 PSF	44.8 PSF	56.7 PSF	44.8 PSF	49.6 PSF	39.2 PSF	49.6 PSF	39.2 PSF	42.5 PSF	33.6 PSF	42.5 PSF	33.6 PSF	35.4 PSF	28.0 PSF	35.4 PSF	28.0 PSF	247.00 LB-FT	207.0 LB	563.5 LB	451.0 LB
30 "			46.7 PSF	36.8 PSF	46.7 PSF	36.8 PSF	40.8 PSF	32.2 PSF	40.8 PSF	32.2 PSF	35.0 PSF	27.6 PSF	35.0 PSF	27.6 PSF	29.1 PSF	23.0 PSF	29.1 PSF	23.0 PSF	247.00 LB-FT	170.2 LB	503.5 LB	437.4 LB
36 "			39.7 PSF	31.3 PSF	39.7 PSF	31.3 PSF	34.7 PSF	27.4 PSF	34.7 PSF	27.4 PSF	29.7 PSF	23.5 PSF	29.7 PSF	23.5 PSF	24.8 PSF	19.5 PSF	24.8 PSF	19.5 PSF	247.00 LB-FT	144.7 LB	462.2 LB	428.3 LB
18 "	48 "	11520 in²	53.0 PSF	41.8 PSF	53.0 PSF	41.8 PSF	46.4 PSF	36.6 PSF	46.4 PSF	36.6 PSF	39.7 PSF	31.4 PSF	39.7 PSF	31.4 PSF	33.1 PSF	26.1 PSF	33.1 PSF	26.1 PSF	247.00 LB-FT	265.2 LB	692.6 LB	506.6 LB
24 "			41.4 PSF	32.6 PSF	41.4 PSF	32.6 PSF	36.2 PSF	28.6 PSF	36.2 PSF	28.6 PSF	31.0 PSF	24.5 PSF	31.0 PSF	24.5 PSF	25.8 PSF	20.4 PSF	25.8 PSF	20.4 PSF	247.00 LB-FT	207.0 LB	589.4 LB	476.9 LB
30 "			34.0 PSF	26.8 PSF	34.0 PSF	26.8 PSF	29.7 PSF	23.5 PSF	29.7 PSF	23.5 PSF	25.5 PSF	20.1 PSF	25.5 PSF	20.1 PSF	21.2 PSF	16.8 PSF	21.2 PSF	16.8 PSF	247.00 LB-FT	170.2 LB	524.7 LB	458.7 LB
36 "			28.9 PSF	22.8 PSF	28.9 PSF	22.8 PSF	25.3 PSF	20.0 PSF	25.3 PSF	20.0 PSF	21.7 PSF	17.1 PSF	21.7 PSF	17.1 PSF					247.00 LB-FT	144.7 LB	480.2 LB	423.9 LB

FRANK BENNARDO, P.E.
PE# 0046549 CA# 9885

FRANK L. BENNARDO LICENSE No PE0046549 STATE OF FLORIDA PROFESSIONAL ENGINEER

12/28/2023

DECEMBER 21, 2023

FL

FL 16921.1

ENGINEERING EXPRESS®
POSTAL ADDRESS:
2234 NORTH FEDERAL HWY #7664
BOCA RATON, FL 33431
ENGINEERINGEXPRESS.COM

PRECISION ALUMINUM PRODUCTS, INC.
1339 SW 1ST WAY
DEERFIELD BEACH, FL 33441
(954) 480-6919

ALUMINUM A/C STANDS
FLORIDA BUILDING CODE EIGHTH EDITION (2023)
FLORIDA STATEWIDE APPROVAL (FSA FL# 16921.1)

REMARKS	DRWN	CHKD	DATE
PREV. SUBMITTAL (20-32768)	CSL	RWN	12/15/20
2023 FBC UPDATE & TECH. CHANGES	MRT	RWN	12/08/23

COPYRIGHT ENGINEERING EXPRESS®

23-69401

SCALE: NTS UNLESS NOTED

12/21/2023 1:55 PM MILTON c:\users\milton\engineering express\production - documents\projects\23-\23-69401 2023 product fbc update fl16921\work\2023 fbc\drawings & cad\23-69401c - fl16921.1 - cad.dwg

"FIXED HD" STAND DESIGN SCHEDULE CONTINUED

DESIGN SCHEDULES NOTES:

1. DESIGN SCHEDULES SHOWN HEREIN ARE REFERENCED TO ALLOWABLE STRENGTH DESIGN (ASD) METHODOLOGY.
2. EMPTY CELLS DENOTES CONDITIONS NOT ALLOWED TO USE.
3. MAXIMUM CALCULATED FACE AREA SHALL BE EQUAL TO OR LESS THAN THE MAXIMUM ALLOWABLE FACE AREA FOR EACH CONFIGURATION.
4. REFERENCE ANCHOR SCHEDULE FOR ANCHOR TYPES LISTED HEREIN.

FRANK BENNARDO, P.E.
PE# 0046549 CA# 9885

FRANK L. BENNARDO LICENSE No PE0046549 STATE OF FLORIDA PROFESSIONAL ENGINEER

12/28/2023

DECEMBER 21, 2023

FL

48" STAND DEPTH: MAX FACE AREA (2208in² - 9216in²), FRAME QUANTITY (4-7 FRAMES)

STAND CLEAR HEIGHT	MAX MEAN UNIT HEIGHT	MAX FACE AREA	UNIT TO FRAME RATIO																LOAD TRANSFER INFORMATION FOR USE WITH HOST STRUCTURE VERIFICATION ONLY			
			MAX FACE AREA : 7 FRAMES				MAX FACE AREA : 6 FRAMES				MAX FACE AREA : 5 FRAMES				MAX FACE AREA : 4 FRAMES							
			ANCHOR TYPE: 1 OR 4		ANCHORS TYPE: 2 OR 3		ANCHOR TYPE: 1 OR 4		ANCHORS TYPE: 2 OR 3		ANCHOR TYPE: 1 OR 4		ANCHORS TYPE: 2 OR 3		ANCHOR TYPE: 1 OR 4		ANCHORS TYPE: 2 OR 3					
			MAX ALLOWABLE LATERAL LOAD	MAX ALLOWABLE UPLIFT	MAX ALLOWABLE LATERAL LOAD	MAX ALLOWABLE UPLIFT	MAX ALLOWABLE LATERAL LOAD	MAX ALLOWABLE UPLIFT	MAX ALLOWABLE LATERAL LOAD	MAX ALLOWABLE UPLIFT	MAX ALLOWABLE LATERAL LOAD	MAX ALLOWABLE UPLIFT	MAX ALLOWABLE LATERAL LOAD	MAX ALLOWABLE UPLIFT	MAX ALLOWABLE LATERAL LOAD	MAX ALLOWABLE UPLIFT	MAX ALLOWABLE LATERAL LOAD	MAX ALLOWABLE UPLIFT	MAX. BASE MOMENT (M)	MAX. BASE SHEAR (V)	MAX. BASE UPLIFT (T)	MAX. BASE GRAVITY (C)
18 "	24 "	2208 in²	200.0 PSF	157.8 PSF	200.0 PSF	157.8 PSF	200.0 PSF	157.8 PSF	200.0 PSF	157.8 PSF	172.9 PSF	136.5 PSF	172.9 PSF	136.5 PSF	138.3 PSF	109.2 PSF	138.3 PSF	109.2 PSF	247.00 LB-FT	265.2 LB	556.0 LB	374.0 LB
24 "			189.0 PSF	149.2 PSF	189.0 PSF	149.2 PSF	162.0 PSF	127.9 PSF	162.0 PSF	127.9 PSF	135.0 PSF	106.6 PSF	135.0 PSF	106.6 PSF	108.0 PSF	85.2 PSF	108.0 PSF	85.2 PSF	247.00 LB-FT	207.0 LB	487.0 LB	373.3 LB
30 "			155.4 PSF	122.7 PSF	155.4 PSF	122.7 PSF	133.2 PSF	105.2 PSF	133.2 PSF	105.2 PSF	111.0 PSF	87.6 PSF	111.0 PSF	87.6 PSF	88.8 PSF	70.1 PSF	88.8 PSF	70.1 PSF	247.00 LB-FT	170.2 LB	440.8 LB	373.6 LB
36 "			132.1 PSF	104.3 PSF	132.1 PSF	104.3 PSF	113.3 PSF	89.4 PSF	113.3 PSF	89.4 PSF	94.4 PSF	74.5 PSF	94.4 PSF	74.5 PSF	75.5 PSF	59.6 PSF	75.5 PSF	59.6 PSF	247.00 LB-FT	144.7 LB	409.1 LB	374.0 LB
18 "	30 "	3720 in²	143.7 PSF	113.4 PSF	143.7 PSF	113.4 PSF	123.2 PSF	97.2 PSF	123.2 PSF	97.2 PSF	102.6 PSF	81.0 PSF	102.6 PSF	81.0 PSF	82.1 PSF	64.8 PSF	82.1 PSF	64.8 PSF	247.00 LB-FT	265.2 LB	594.3 LB	407.2 LB
24 "			112.2 PSF	88.5 PSF	112.2 PSF	88.5 PSF	96.1 PSF	75.9 PSF	96.1 PSF	75.9 PSF	80.1 PSF	63.2 PSF	80.1 PSF	63.2 PSF	64.1 PSF	50.6 PSF	64.1 PSF	50.6 PSF	247.00 LB-FT	207.0 LB	512.9 LB	399.2 LB
30 "			92.2 PSF	72.8 PSF	92.2 PSF	72.8 PSF	79.0 PSF	62.4 PSF	79.0 PSF	62.4 PSF	65.9 PSF	52.0 PSF	65.9 PSF	52.0 PSF	52.7 PSF	41.6 PSF	52.7 PSF	41.6 PSF	247.00 LB-FT	170.2 LB	462.1 LB	394.9 LB
36 "			78.4 PSF	61.9 PSF	78.4 PSF	61.9 PSF	67.2 PSF	53.0 PSF	67.2 PSF	53.0 PSF	56.0 PSF	44.2 PSF	56.0 PSF	44.2 PSF	44.8 PSF	35.3 PSF	44.8 PSF	35.3 PSF	247.00 LB-FT	144.7 LB	427.2 LB	392.1 LB
18 "	36 "	5040 in²	106.0 PSF	83.7 PSF	106.0 PSF	83.7 PSF	90.9 PSF	71.7 PSF	90.9 PSF	71.7 PSF	75.7 PSF	59.8 PSF	75.7 PSF	59.8 PSF	60.6 PSF	47.8 PSF	60.6 PSF	47.8 PSF	247.00 LB-FT	265.2 LB	627.5 LB	440.3 LB
24 "			82.8 PSF	65.3 PSF	82.8 PSF	65.3 PSF	70.9 PSF	56.0 PSF	70.9 PSF	56.0 PSF	59.1 PSF	46.7 PSF	59.1 PSF	46.7 PSF	47.3 PSF	37.3 PSF	47.3 PSF	37.3 PSF	247.00 LB-FT	207.0 LB	538.8 LB	425.1 LB
30 "			68.1 PSF	53.7 PSF	68.1 PSF	53.7 PSF	58.3 PSF	46.0 PSF	58.3 PSF	46.0 PSF	48.6 PSF	38.4 PSF	48.6 PSF	38.4 PSF	38.9 PSF	30.7 PSF	38.9 PSF	30.7 PSF	247.00 LB-FT	170.2 LB	483.4 LB	416.1 LB
36 "			57.9 PSF	45.7 PSF	57.9 PSF	45.7 PSF	49.6 PSF	39.1 PSF	49.6 PSF	39.1 PSF	41.3 PSF	32.6 PSF	41.3 PSF	32.6 PSF	33.0 PSF	26.1 PSF	33.0 PSF	26.1 PSF	247.00 LB-FT	144.7 LB	445.3 LB	410.2 LB
18 "	42 "	6720 in²	79.5 PSF	62.8 PSF	79.5 PSF	62.8 PSF	68.2 PSF	53.8 PSF	68.2 PSF	53.8 PSF	56.8 PSF	44.8 PSF	56.8 PSF	44.8 PSF	45.4 PSF	35.8 PSF	45.4 PSF	35.8 PSF	247.00 LB-FT	265.2 LB	660.6 LB	473.5 LB
24 "			62.1 PSF	49.0 PSF	62.1 PSF	49.0 PSF	53.2 PSF	42.0 PSF	53.2 PSF	42.0 PSF	44.3 PSF	35.0 PSF	44.3 PSF	35.0 PSF	35.4 PSF	28.0 PSF	35.4 PSF	28.0 PSF	247.00 LB-FT	207.0 LB	564.7 LB	451.0 LB
30 "			51.0 PSF	40.3 PSF	51.0 PSF	40.3 PSF	43.7 PSF	34.5 PSF	43.7 PSF	34.5 PSF	36.4 PSF	28.8 PSF	36.4 PSF	28.8 PSF	29.1 PSF	23.0 PSF	29.1 PSF	23.0 PSF	247.00 LB-FT	170.2 LB	504.7 LB	437.4 LB
36 "			43.4 PSF	34.2 PSF	43.4 PSF	34.2 PSF	37.2 PSF	29.3 PSF	37.2 PSF	29.3 PSF	31.0 PSF	24.4 PSF	31.0 PSF	24.4 PSF	24.8 PSF	19.5 PSF	24.8 PSF	19.5 PSF	247.00 LB-FT	144.7 LB	463.4 LB	428.3 LB
18 "	48 "	9216 in²	58.0 PSF	45.8 PSF	58.0 PSF	45.8 PSF	49.7 PSF	39.2 PSF	49.7 PSF	39.2 PSF	41.4 PSF	32.7 PSF	41.4 PSF	32.7 PSF	33.1 PSF	26.1 PSF	33.1 PSF	26.1 PSF	247.00 LB-FT	265.2 LB	693.8 LB	506.6 LB
24 "			45.2 PSF	35.7 PSF	45.2 PSF	35.7 PSF	38.8 PSF	30.6 PSF	38.8 PSF	30.6 PSF	32.3 PSF	25.5 PSF	32.3 PSF	25.5 PSF	25.8 PSF	20.4 PSF	25.8 PSF	20.4 PSF	247.00 LB-FT	207.0 LB	590.6 LB	476.9 LB
30 "			37.2 PSF	29.4 PSF	37.2 PSF	29.4 PSF	31.9 PSF	25.2 PSF	31.9 PSF	25.2 PSF	26.6 PSF	21.0 PSF	26.6 PSF	21.0 PSF	21.2 PSF	16.8 PSF	21.2 PSF	16.8 PSF	247.00 LB-FT	170.2 LB	525.9 LB	458.7 LB
36 "			31.6 PSF	25.0 PSF	31.6 PSF	25.0 PSF	27.1 PSF	21.4 PSF	27.1 PSF	21.4 PSF	22.6 PSF	17.8 PSF	22.6 PSF	17.8 PSF					247.00 LB-FT	144.7 LB	481.5 LB	419.4 LB

48" STAND DEPTH: MAX FACE AREA (1656in² - 6912in²), FRAME QUANTITY (3-6 FRAMES)

STAND CLEAR HEIGHT	MAX MEAN UNIT HEIGHT	MAX FACE AREA	UNIT TO FRAME RATIO																LOAD TRANSFER INFORMATION FOR USE WITH HOST STRUCTURE VERIFICATION ONLY			
			MAX FACE AREA : 6 FRAMES				MAX FACE AREA : 5 FRAMES				MAX FACE AREA : 4 FRAMES				MAX FACE AREA : 3 FRAMES							
			ANCHOR TYPE: 1 OR 4		ANCHORS TYPE: 2 OR 3		ANCHOR TYPE: 1 OR 4		ANCHORS TYPE: 2 OR 3		ANCHOR TYPE: 1 OR 4		ANCHORS TYPE: 2 OR 3		ANCHOR TYPE: 1 OR 4		ANCHORS TYPE: 2 OR 3					
			MAX ALLOWABLE LATERAL LOAD	MAX ALLOWABLE UPLIFT	MAX ALLOWABLE LATERAL LOAD	MAX ALLOWABLE UPLIFT	MAX ALLOWABLE LATERAL LOAD	MAX ALLOWABLE UPLIFT	MAX ALLOWABLE LATERAL LOAD	MAX ALLOWABLE UPLIFT	MAX ALLOWABLE LATERAL LOAD	MAX ALLOWABLE UPLIFT	MAX ALLOWABLE LATERAL LOAD	MAX ALLOWABLE UPLIFT	MAX ALLOWABLE LATERAL LOAD	MAX ALLOWABLE UPLIFT	MAX ALLOWABLE LATERAL LOAD	MAX ALLOWABLE UPLIFT	MAX. BASE MOMENT (M)	MAX. BASE SHEAR (V)	MAX. BASE UPLIFT (T)	MAX. BASE GRAVITY (C)
18 "	24 "	1656 in²	200.0 PSF	157.8 PSF	200.0 PSF	157.8 PSF	200.0 PSF	157.8 PSF	200.0 PSF	157.8 PSF	184.5 PSF	145.6 PSF	184.5 PSF	145.6 PSF	138.3 PSF	109.2 PSF	138.3 PSF	109.2 PSF	247.00 LB-FT	265.2 LB	557.2 LB	374.0 LB
24 "			200.0 PSF	157.8 PSF	200.0 PSF	157.8 PSF	180.0 PSF	142.1 PSF	180.0 PSF	142.1 PSF	144.0 PSF	113.7 PSF	144.0 PSF	113.7 PSF	108.0 PSF	85.2 PSF	108.0 PSF	85.2 PSF	247.00 LB-FT	207.0 LB	486.4 LB	373.3 LB
30 "			177.6 PSF	140.2 PSF	177.6 PSF	140.2 PSF	148.0 PSF	116.8 PSF	148.0 PSF	116.8 PSF	118.4 PSF	93.5 PSF	118.4 PSF	93.5 PSF	88.8 PSF	70.1 PSF	88.8 PSF	70.1 PSF	247.00 LB-FT	170.2 LB	442.4 LB	373.6 LB
36 "			151.0 PSF	119.2 PSF	151.0 PSF	119.2 PSF	125.8 PSF	99.3 PSF	125.8 PSF	99.3 PSF	100.7 PSF	79.5 PSF	100.7 PSF	79.5 PSF	75.5 PSF	59.6 PSF	75.5 PSF	59.6 PSF	247.00 LB-FT	144.7 LB	410.7 LB	374.0 LB
18 "	30 "	2790 in²	164.2 PSF	129.6 PSF	164.2 PSF	129.6 PSF	136.8 PSF	108.0 PSF	136.8 PSF	108.0 PSF	109.5 PSF	86.4 PSF	109.5 PSF	86.4 PSF	82.1 PSF	64.8 PSF	82.1 PSF	64.8 PSF	247.00 LB-FT	265.2 LB	595.9 LB	407.2 LB
24 "			128.2 PSF	101.2 PSF	128.2 PSF	101.2 PSF	106.8 PSF	84.3 PSF	106.8 PSF	84.3 PSF	85.4 PSF	67.4 PSF	85.4 PSF	67.4 PSF	64.1 PSF	50.6 PSF	64.1 PSF	50.6 PSF	247.00 LB-FT	207.0 LB	514.5 LB	399.2 LB
30 "			105.4 PSF	83.2 PSF	105.4 PSF	83.2 PSF	87.8 PSF	69.3 PSF	87.8 PSF	69.3 PSF	70.3 PSF	55.5 PSF	70.3 PSF	55.5 PSF	52.7 PSF	41.6 PSF	52.7 PSF	41.6 PSF	247.00 LB-FT	170.2 LB	463.7 LB	394.9 LB
36 "			89.6 PSF	70.7 PSF	89.6 PSF	70.7 PSF	74.7 PSF	58.9 PSF	74.7 PSF	58.9 PSF	59.7 PSF	47.1 PSF	59.7 PSF	47.1 PSF	44.8 PSF	35.3 PSF	44.8 PSF	35.3 PSF	247.00 LB-FT	144.7 LB	428.8 LB	392.1 LB
18 "	36 "	3780 in²	121.2 PSF	95.7 PSF	121.2 PSF	95.7 PSF	101.0 PSF	79.7 PSF	101.0 PSF	79.7 PSF	80.8 PSF	63.8 PSF	80.8 PSF	63.8 PSF	60.6 PSF	47.8 PSF	60.6 PSF	47.8 PSF	247.00 LB-FT	265.2 LB	629.1 LB	440.3 LB
24 "			94.6 PSF	74.7 PSF	94.6 PSF	74.7 PSF	78.8 PSF	62.2 PSF	78.8 PSF	62.2 PSF	63.1 PSF	49.8 PSF	63.1 PSF	49.8 PSF	47.3 PSF	37.3 PSF	47.3 PSF	37.3 PSF	247.00 LB-FT	207.0 LB	540.4 LB	425.1 LB
30 "			77.8 PSF	61.4 PSF	77.8 PSF	61.4 PSF	64.8 PSF	51.2 PSF	64.8 PSF	51.2 PSF	51.8 PSF	40.9 PSF	51.8 PSF	40.9 PSF	38.9 PSF	30.7 PSF	38.9 PSF	30.7 PSF	247.00 LB-FT	170.2 LB	485.0 LB	416.1 LB
36 "			66.1 PSF	52.2 PSF	66.1 PSF	52.2 PSF	55.1 PSF	43.5 PSF	55.1 PSF	43.5 PSF	44.1 PSF	34.8 PSF	44.1 PSF	34.8 PSF	33.0 PSF	26.1 PSF	33.0 PSF	26.1 PSF	247.00 LB-FT	144.7 LB	446.9 LB	410.2 LB
18 "	42 "	5040 in²	90.9 PSF	71.7 PSF	90.9 PSF	71.7 PSF	75.7 PSF	59.8 PSF	75.7 PSF	59.8 PSF	60.6 PSF	47.8 PSF	60.6 PSF	47.8 PSF	45.4 PSF	35.8 PSF	45.4 PSF	35.8 PSF	247.00 LB-FT	265.2 LB	662.2 LB	473.5 LB
24 "			70.9 PSF	56.0 PSF	70.9 PSF	56.0 PSF	59.1 PSF	46.7 PSF	59.1 PSF	46.7 PSF	47.3 PSF	37.3 PSF	47.3 PSF	37.3 PSF	35.4 PSF	28.0 PSF	35.4 PSF	28.0 PSF	247.00 LB-FT	207.0 LB	566.3 LB	451.0 LB
30 "			58.3 PSF	46.0 PSF	58.3 PSF	46.0 PSF	48.6 PSF	38.4 PSF	48.6 PSF	38.4 PSF	38.9 PSF	30.7 PSF	38.9 PSF	30.7 PSF	29.1 PSF	23.0 PSF	29.1 PSF	23.0 PSF	247.00 LB-FT	170.2 LB	506.3 LB	437.4 LB
36 "			49.6 PSF	39.1 PSF	49.6 PSF	39.1 PSF	41.3 PSF	32.6 PSF	41.3 PSF	32.6 PSF	33.0 PSF	26.1 PSF	33.0 PSF	26.1 PSF	24.8 PSF	19.5 PSF	24.8 PSF	19.5 PSF	247.00 LB-FT	144.7 LB	465.0 LB	428.3 LB
18 "	48 "	6912 in²	66.3 PSF	52.3 PSF	66.3 PSF	52.3 PSF	55.2 PSF	43.6 PSF	55.2 PSF	43.6 PSF	44.2 PSF	34.8 PSF	44.2 PSF	34.8 PSF	33.1 PSF	26.1 PSF	33.1 PSF	26.1 PSF	247.00 LB-FT	265.2 LB	695.4 LB	506.6 LB
24 "			51.7 PSF	40.8 PSF	51.7 PSF	40.8 PSF	43.1 PSF	34.0 PSF	43.1 PSF	34.0 PSF	34.5 PSF	27.2 PSF	34.5 PSF	27.2 PSF	25.8 PSF	20.4 PSF	25.8 PSF	20.4 PSF	247.00 LB-FT	207.0 LB	592.2 LB	476.9 LB
30 "			42.5 PSF	33.6 PSF	42.5 PSF	33.6 PSF	35.4 PSF	28.0 PSF	35.4 PSF	28.0 PSF	28.3 PSF	22.4 PSF	28.3 PSF	22.4 PSF	21.2 PSF	16.8 PSF	21.2 PSF	16.8 PSF	247.00 LB-FT	170.2 LB	527.5 LB	458.7 LB
36 "			36.1 PSF	28.5 PSF	36.1 PSF	28.5 PSF	30.1 PSF	23.8 PSF	30.1 PSF	23.8 PSF	24.1 PSF	19.0 PSF	24.1 PSF	19.0 PSF					247.00 LB-FT	144.7 LB	483.1 LB	412.7 LB

48" STAND DEPTH: MAX FACE AREA (1104in² - 4608in²), FRAME QUANTITY (2-5 FRAMES)

STAND CLEAR HEIGHT	MAX MEAN UNIT HEIGHT	MAX FACE AREA	UNIT TO FRAME RATIO																LOAD TRANSFER INFORMATION FOR USE WITH HOST STRUCTURE VERIFICATION ONLY			
			MAX FACE AREA : 5 FRAMES				MAX FACE AREA : 4 FRAMES				MAX FACE AREA : 3 FRAMES				MAX FACE AREA : 2 FRAMES							
			ANCHOR TYPE: 1 OR 4		ANCHORS TYPE: 2 OR 3		ANCHOR TYPE: 1 OR 4		ANCHORS TYPE: 2 OR 3		ANCHOR TYPE: 1 OR 4		ANCHORS TYPE: 2 OR 3		ANCHOR TYPE: 1 OR 4		ANCHORS TYPE: 2 OR 3					
			MAX ALLOWABLE LATERAL LOAD	MAX ALLOWABLE UPLIFT	MAX ALLOWABLE LATERAL LOAD	MAX ALLOWABLE UPLIFT	MAX ALLOWABLE LATERAL LOAD	MAX ALLOWABLE UPLIFT	MAX ALLOWABLE LATERAL LOAD	MAX ALLOWABLE UPLIFT	MAX ALLOWABLE LATERAL LOAD	MAX ALLOWABLE UPLIFT	MAX ALLOWABLE LATERAL LOAD	MAX ALLOWABLE UPLIFT	MAX ALLOWABLE LATERAL LOAD	MAX ALLOWABLE UPLIFT	MAX ALLOWABLE LATERAL LOAD	MAX ALLOWABLE UPLIFT	MAX. BASE MOMENT (M)	MAX. BASE SHEAR (V)	MAX. BASE UPLIFT (T)	MAX. BASE GRAVITY (C)
18 "	24 "	1104 in²	200.0 PSF	157.8 PSF	200.0 PSF	157.8 PSF	200.0 PSF	157.8 PSF	200.0 PSF	157.8 PSF	200.0 PSF	157.8 PSF	200.0 PSF	157.8 PSF	138.3 PSF	109.2 PSF	138.3 PSF	109.2 PSF	247.00 LB-FT	265.2 LB	551.5 LB	374.0 LB
24 "			200.0 PSF	157.8 PSF	200.0 PSF	157.8 PSF	200.0 PSF	157.8 PSF	200.0 PSF	157.8 PSF	162.0 PSF	127.9 PSF	162.0 PSF	127.9 PSF	108.0 PSF	85.2 PSF	108.0 PSF	85.2 PSF	247.00 LB-FT	207.0 LB	484.9 LB	373.3 LB
30 "			200.0 PSF	157.8 PSF	200.0 PSF	157.8 PSF	177.6 PSF	140.2 PSF	177.6 PSF	140.2 PSF	133.2 PSF	105.2 PSF	133.2 PSF	105.2 PSF	88.8 PSF	70.1 PSF	88.8 PSF	70.1 PSF	247.00 LB-FT	170.2 LB	442.4 LB	373.6 LB
36 "			188.8 PSF	149.0 PSF	188.8 PSF	149.0 PSF	151.0 PSF	119.2 PSF	151.0 PSF	119.2 PSF	113.3 PSF	89.4 PSF	113.3 PSF	89.4 PSF	75.5 PSF	59.6 PSF	75.5 PSF	59.6 PSF	247.00 LB-FT	144.7 LB	412.9 LB	374.0 LB
18 "	30 "	1860 in²	200.0 PSF	157.8 PSF	200.0 PSF	157.8 PSF	164.2 PSF	129.6 PSF	164.2 PSF	129.6 PSF	123.2 PSF	97.2 PSF	123.2 PSF	97.2 PSF	82.1 PSF	64.8 PSF	82.1 PSF	64.8 PSF	247.00 LB-FT	265.2 LB	595.9 LB	407.2 LB
24 "			160.3 PSF	126.5 PSF	160.3 PSF	126.5 PSF	128.2 PSF	101.2 PSF	128.2 PSF	101.2 PSF	96.1 PSF	75.9 PSF	96.1 PSF	75.9 PSF	64.1 PSF	50.6 PSF	64.1 PSF	50.6 PSF	247.00 LB-FT	207.0 LB	516.8 LB	399.2 LB
30 "			131.8 PSF	104.0 PSF	131.8 PSF	104.0 PSF	105.4 PSF	83.2 PSF	105.4 PSF	83.2 PSF	79.0 PSF	62.4 PSF	79.0 PSF	62.4 PSF	52.7 PSF	41.6 PSF	52.7 PSF	41.6 PSF	247.00 LB-FT	170.2 LB	465.9 LB	394.9 LB
36 "			112.0 PSF	88.4 PSF	112.0 PSF	88.4 PSF	89.6 PSF	70.7 PSF	89.6 PSF	70.7 PSF	67.2 PSF	53.0 PSF	67.2 PSF	53.0 PSF	44.8 PSF	35.3 PSF	44.8 PSF	35.3 PSF	247.00 LB-FT	144.7 LB	431.0 LB	392.1 LB
18 "	36 "	2520 in²	151.5 PSF	119.6 PSF	151.5 PSF	119.6 PSF	121.2 PSF	95.7 PSF	121.2 PSF	95.7 PSF	90.9 PSF	71.7 PSF	90.9 PSF	71.7 PSF	60.6 PSF	47.8 PSF	60.6 PSF	47.8 PSF	247.00 LB-FT	265.2 LB	631.3 LB	440.3 LB
24 "			118.3 PSF	93.4 PSF	118.3 PSF	93.4 PSF	94.6 PSF	74.7 PSF	94.6 PSF	74.7 PSF	70.9 PSF	56.0 PSF	70.9 PSF	56.0 PSF	47.3 PSF	37.3 PSF	47.3 PSF	37.3 PSF	247.00 LB-FT	207.0 LB	542.7 LB	425.1 LB
30 "			97.3 PSF	76.8 PSF	97.3 PSF	76.8 PSF	77.8 PSF	61.4 PSF	77.8 PSF	61.4 PSF	58.3 PSF	46.0 PSF	58.3 PSF	46.0 PSF	38.9 PSF	30.7 PSF	38.9 PSF	30.7 PSF	247.00 LB-FT	170.2 LB	487.2 LB	416.1 LB
36 "			82.7 PSF	65.3 PSF	82.7 PSF	65.3 PSF	66.1 PSF	52.2 PSF	66.1 PSF	52.2 PSF	49.6 PSF	39.1 PSF	49.6 PSF	39.1 PSF	33.0 PSF	26.1 PSF	33.0 PSF	26.1 PSF	247.00 LB-FT	144.7 LB	449.1 LB	410.2 LB
18 "	42 "	3360 in²	113.6 PSF	89.7 PSF	113.6 PSF	89.7 PSF	90.9 PSF	71.7 PSF	90.9 PSF	71.7 PSF	68.2 PSF	53.8 PSF	68.2 PSF	53.8 PSF	45.4 PSF	35.8 PSF	45.4 PSF	35.8 PSF	247.00 LB-FT	265.2 LB	664.5 LB	473.5 LB
24 "			88.7 PSF	70.0 PSF	88.7 PSF	70.0 PSF	70.9 PSF	56.0 PSF	70.9 PSF	56.0 PSF	53.2 PSF	42.0 PSF	53.2 PSF	42.0 PSF	35.4 PSF	28.0 PSF	35.4 PSF	28.0 PSF	247.00 LB-FT	207.0 LB	568.5 LB	451.0 LB
30 "			72.9 PSF	57.6 PSF	72.9 PSF	57.6 PSF	58.3 PSF	46.0 PSF	58.3 PSF	46.0 PSF	43.7 PSF	34.5 PSF	43.7 PSF	34.5 PSF	29.1 PSF	23.0 PSF	29.1 PSF	23.0 PSF	247.00 LB-FT	170.2 LB	508.5 LB	437.4 LB
36 "			62.0 PSF	48.9 PSF	62.0 PSF	48.9 PSF	49.6 PSF	39.1 PSF	49.6 PSF	39.1 PSF	37.2 PSF	29.3 PSF	37.2 PSF	29.3 PSF	24.8 PSF	19.5 PSF	24.8 PSF	19.5 PSF	247.00 LB-FT	144.7 LB	467.2 LB	428.3 LB
18 "	48 "	4608 in²	82.8 PSF	65.4 PSF	82.8 PSF	65.4 PSF	66.3 PSF	52.3 PSF	66.3 PSF	52.3 PSF	49.7 PSF	39.2 PSF	49.7 PSF	39.2 PSF	33.1 PSF	26.1 PSF	33.1 PSF	26.1 PSF	247.00 LB-FT	265.2 LB	697.6 LB	506.6 LB
24 "			64.7 PSF	51.0 PSF	64.7 PSF	51.0 PSF	51.7 PSF	40.8 PSF	51.7 PSF	40.8 PSF	38.8 PSF	30.6 PSF	38.8 PSF	30.6 PSF	25.8 PSF	20.4 PSF	25.8 PSF	20.4 PSF	247.00 LB-FT	207.0 LB	594.4 LB	476.9 LB
30 "			53.2 PSF	42.0 PSF	53.2 PSF	42.0 PSF	42.5 PSF	33.6 PSF	42.5 PSF	33.6 PSF	31.9 PSF	25.2 PSF	31.9 PSF	25.2 PSF	21.2 PSF	16.8 PSF	21.2 PSF	16.8 PSF	247.00 LB-FT	170.2 LB	529.8 LB	458.7 LB
36 "			45.2 PSF	35.7 PSF	45.2 PSF	35.7 PSF	36.1 PSF	28.5 PSF	36.1 PSF	28.5 PSF	27.1 PSF	21.4 PSF	27.1 PSF	21.4 PSF					247.00 LB-FT	144.7 LB	485.3 LB	401.4 LB

FL 16921.1

ENGINEERING EXPRESS®
POSTAL ADDRESS:
2234 NORTH FEDERAL HWY #7664
BOCA RATON, FL 33431
ENGINEERINGEXPRESS.COM

PRECISION ALUMINUM PRODUCTS, INC.
1339 SW 1ST WAY
DEERFIELD BEACH, FL 33441
(954) 480-6919

ALUMINUM A/C STANDS
FLORIDA BUILDING CODE EIGHTH EDITION (2023)
FLORIDA STATEWIDE APPROVAL (FSA FL# 16921.1)

REMARKS	DRWN	CHKD	DATE
PREV. SUBMITTAL (20-32768)	CSL	RWN	12/15/20
2023 FBC UPDATE & TECH. CHANGES	MRT	RWN	12/08/23

COPYRIGHT ENGINEERING EXPRESS®

23-69401

SCALE: NTS UNLESS NOTED

12/21/2023 1:55 PM MILTON c:\users\milton\engineering express\production - documents\projects\23-\23-69401 2023 product fbc update fl16921\work\2023 fbc\drawings & cad\23-69401c - fl16921.1 - cad.dwg

"FIXED HD" STAND DESIGN SCHEDULE CONTINUED

48" STAND DEPTH: MAX FACE AREA (552in² - 2304in²), FRAME QUANTITY (2-3 FRAMES)

STAND CLEAR HEIGHT	MAX MEAN UNIT HEIGHT	MAX FACE AREA	UNIT TO FRAME RATIO — MAX FACE AREA : 3 FRAMES — ANCHOR TYPE: 1 OR 4 — MAX ALLOWABLE LATERAL LOAD	MAX ALLOWABLE UPLIFT	ANCHOR TYPE: 2 OR 3 — MAX ALLOWABLE LATERAL LOAD	MAX ALLOWABLE UPLIFT	MAX FACE AREA : 2 FRAMES — ANCHOR TYPE: 1 OR 4 — MAX ALLOWABLE LATERAL LOAD	MAX ALLOWABLE UPLIFT	ANCHOR TYPE: 2 OR 3 — MAX ALLOWABLE LATERAL LOAD	MAX ALLOWABLE UPLIFT	LOAD TRANSFER INFORMATION FOR USE WITH HOST STRUCTURE VERIFICATION ONLY — MAX. BASE MOMENT (M)	MAX. BASE SHEAR (V)	MAX. BASE UPLIFT (T)	MAX. BASE GRAVITY (C)
18 "	24 "	552 in²	200.0 PSF	157.8 PSF	200.0 PSF	157.8 PSF	200.0 PSF	157.8 PSF	200.0 PSF	157.8 PSF	178.50 LB-FT	191.6 LB	403.6 LB	240.2 LB
24 "			200.0 PSF	157.8 PSF	200.0 PSF	157.8 PSF	200.0 PSF	157.8 PSF	200.0 PSF	157.8 PSF	228.70 LB-FT	191.6 LB	451.5 LB	288.1 LB
30 "			200.0 PSF	157.8 PSF	200.0 PSF	157.8 PSF	177.6 PSF	140.2 PSF	177.6 PSF	140.2 PSF	247.00 LB-FT	170.2 LB	442.4 LB	306.1 LB
18 "	30 "	690 in²	200.0 PSF	157.8 PSF	200.0 PSF	157.8 PSF	200.0 PSF	157.8 PSF	200.0 PSF	157.8 PSF	223.20 LB-FT	239.5 LB	537.2 LB	313.3 LB
24 "			192.3 PSF	151.8 PSF	192.3 PSF	151.8 PSF	128.2 PSF	101.2 PSF	128.2 PSF	101.2 PSF	247.00 LB-FT	207.0 LB	518.3 LB	331.7 LB
30 "			158.1 PSF	124.8 PSF	158.1 PSF	124.8 PSF	105.4 PSF	83.2 PSF	105.4 PSF	83.2 PSF	247.00 LB-FT	170.2 LB	467.4 LB	327.4 LB
36 "			134.5 PSF	106.1 PSF	134.5 PSF	106.1 PSF	89.6 PSF	70.7 PSF	89.6 PSF	70.7 PSF	247.00 LB-FT	144.7 LB	432.5 LB	324.6 LB
18 "	36 "	1116 in²	200.0 PSF	157.8 PSF	200.0 PSF	157.8 PSF	136.8 PSF	108.0 PSF	136.8 PSF	108.0 PSF	247.00 LB-FT	265.2 LB	629.1 LB	372.8 LB
24 "			141.9 PSF	112.0 PSF	141.9 PSF	112.0 PSF	94.6 PSF	74.7 PSF	94.6 PSF	74.7 PSF	247.00 LB-FT	207.0 LB	544.2 LB	357.6 LB
30 "			116.7 PSF	92.1 PSF	116.7 PSF	92.1 PSF	77.8 PSF	61.4 PSF	77.8 PSF	61.4 PSF	247.00 LB-FT	170.2 LB	488.7 LB	348.6 LB
36 "			99.2 PSF	78.3 PSF	99.2 PSF	78.3 PSF	66.1 PSF	52.2 PSF	66.1 PSF	52.2 PSF	247.00 LB-FT	144.7 LB	450.6 LB	342.7 LB
18 "	42 "	1470 in²	155.8 PSF	123.0 PSF	155.8 PSF	123.0 PSF	103.9 PSF	82.0 PSF	103.9 PSF	82.0 PSF	247.00 LB-FT	265.2 LB	666.0 LB	406.0 LB
24 "			106.4 PSF	84.0 PSF	106.4 PSF	84.0 PSF	70.9 PSF	56.0 PSF	70.9 PSF	56.0 PSF	247.00 LB-FT	207.0 LB	570.0 LB	383.5 LB
30 "			87.5 PSF	69.1 PSF	87.5 PSF	69.1 PSF	58.3 PSF	46.0 PSF	58.3 PSF	46.0 PSF	247.00 LB-FT	170.2 LB	510.0 LB	369.9 LB
36 "			74.4 PSF	58.7 PSF	74.4 PSF	58.7 PSF	49.6 PSF	39.1 PSF	49.6 PSF	39.1 PSF	247.00 LB-FT	144.7 LB	468.7 LB	360.8 LB
18 "	48 "	1920 in²	119.3 PSF	94.2 PSF	119.3 PSF	94.2 PSF	79.5 PSF	62.8 PSF	79.5 PSF	62.8 PSF	247.00 LB-FT	265.2 LB	699.1 LB	439.1 LB
24 "			77.6 PSF	61.3 PSF	77.6 PSF	61.3 PSF	51.7 PSF	40.8 PSF	51.7 PSF	40.8 PSF	247.00 LB-FT	207.0 LB	595.9 LB	409.4 LB
30 "			63.8 PSF	50.4 PSF	63.8 PSF	50.4 PSF	42.5 PSF	33.6 PSF	42.5 PSF	33.6 PSF	247.00 LB-FT	170.2 LB	531.3 LB	391.2 LB
36 "			54.2 PSF	42.8 PSF	54.2 PSF	42.8 PSF	36.1 PSF	28.5 PSF	36.1 PSF	28.5 PSF	247.00 LB-FT	144.7 LB	486.8 LB	378.9 LB

DESIGN SCHEDULES NOTES:

1. DESIGN SCHEDULES SHOWN HEREIN ARE REFERENCED TO ALLOWABLE STRENGTH DESIGN (ASD) METHODOLOGY.

2. EMPTY CELLS DENOTES CONDITIONS NOT ALLOWED TO USE.

3. MAXIMUM CALCULATED FACE AREA SHALL BE EQUAL TO OR LESS THAN THE MAXIMUM ALLOWABLE FACE AREA FOR EACH CONFIGURATION.

4. REFERENCE ANCHOR SCHEDULE FOR ANCHOR TYPES LISTED HEREIN.

"HD CUSTOM CROSS-BRACE" STAND DESIGN SCHEDULE

24" STAND DEPTH:

MAX UNIT DIMENSIONS (W x D x H)	STAND CLEAR HEIGHT	UNIT TO FRAME RATIO — (1) UNIT: (3) FRAMES — ANCHOR TYPE: 1 OR 4 — MAX ALLOWABLE LATERAL LOAD	MAX ALLOWABLE UPLIFT	ANCHORS TYPE: 2 OR 3 — MAX ALLOWABLE LATERAL LOAD	MAX ALLOWABLE UPLIFT	(2) UNITS: (5) FRAMES — ANCHOR TYPE: 1 OR 4 — MAX ALLOWABLE LATERAL LOAD	MAX ALLOWABLE UPLIFT	ANCHORS TYPE: 2 OR 3 — MAX ALLOWABLE LATERAL LOAD	MAX ALLOWABLE UPLIFT	(3) UNITS: (6) FRAMES — ANCHOR TYPE: 1 OR 4 — MAX ALLOWABLE LATERAL LOAD	MAX ALLOWABLE UPLIFT	ANCHORS TYPE: 2 OR 3 — MAX ALLOWABLE LATERAL LOAD	MAX ALLOWABLE UPLIFT	LOAD TRANSFER INFORMATION FOR USE WITH HOST STRUCTURE VERIFICATION ONLY — MAX. BASE MOMENT (M)	MAX. BASE SHEAR (V)	MAX. BASE UPLIFT (T)	MAX. BASE GRAVITY (C)
52" WIDTH 49" DEPTH 72" HEIGHT	18 "	71.7 PSF	56.6 PSF	57.6 PSF	45.5 PSF	59.7 PSF	47.2 PSF	48.0 PSF	37.0 PSF	47.8 PSF	37.7 PSF	38.4 PSF	30.3 PSF	181.00 LB-FT	310.70 LB	1642.3 LB	1606.9 LB
	24 "	60.9 PSF	48.1 PSF	49.5 PSF	39.1 PSF	50.8 PSF	40.1 PSF	41.2 PSF	32.6 PSF	40.6 PSF	32.1 PSF	33.0 PSF	26.1 PSF	196.50 LB-FT	264.3 LB	1526.8 LB	1534.7 LB
	30 "	63.5 PSF	50.1 PSF	52.2 PSF	41.2 PSF	52.9 PSF	41.8 PSF	43.5 PSF	34.3 PSF	42.3 PSF	33.4 PSF	34.8 PSF	27.5 PSF	247.00 LB-FT	275.3 LB	1733.2 LB	1726.3 LB
	36 "	54.3 PSF	42.9 PSF	47.0 PSF	37.1 PSF	45.3 PSF	35.7 PSF	39.2 PSF	30.9 PSF	36.2 PSF	28.6 PSF	31.4 PSF	24.8 PSF	247.00 LB-FT	235.6 LB	1599.7 LB	1570.0 LB

36" STAND DEPTH:

MAX UNIT DIMENSIONS (W x D x H)	STAND CLEAR HEIGHT	UNIT TO FRAME RATIO — (1) UNIT: (3) FRAMES — ANCHOR TYPE: 1 OR 4 — MAX ALLOWABLE LATERAL LOAD	MAX ALLOWABLE UPLIFT	ANCHORS TYPE: 2 OR 3 — MAX ALLOWABLE LATERAL LOAD	MAX ALLOWABLE UPLIFT	(2) UNITS: (5) FRAMES — ANCHOR TYPE: 1 OR 4 — MAX ALLOWABLE LATERAL LOAD	MAX ALLOWABLE UPLIFT	ANCHORS TYPE: 2 OR 3 — MAX ALLOWABLE LATERAL LOAD	MAX ALLOWABLE UPLIFT	(3) UNITS: (6) FRAMES — ANCHOR TYPE: 1 OR 4 — MAX ALLOWABLE LATERAL LOAD	MAX ALLOWABLE UPLIFT	ANCHORS TYPE: 2 OR 3 — MAX ALLOWABLE LATERAL LOAD	MAX ALLOWABLE UPLIFT	LOAD TRANSFER INFORMATION FOR USE WITH HOST STRUCTURE VERIFICATION ONLY — MAX. BASE MOMENT (M)	MAX. BASE SHEAR (V)	MAX. BASE UPLIFT (T)	MAX. BASE GRAVITY (C)
52" WIDTH 49" DEPTH 72" HEIGHT	18 "	78.9 PSF	62.3 PSF	63.0 PSF	49.7 PSF	65.8 PSF	51.9 PSF	52.5 PSF	41.5 PSF	52.6 PSF	41.5 PSF	42.0 PSF	33.2 PSF	215.30 LB-FT	343.4 LB	1257.0 LB	1216.7 LB
	24 "	66.3 PSF	52.4 PSF	53.6 PSF	42.3 PSF	55.3 PSF	43.6 PSF	44.7 PSF	35.3 PSF	44.2 PSF	34.9 PSF	35.8 PSF	28.2 PSF	229.80 LB-FT	288.7 LB	1151.2 LB	1157.6 LB
	30 "	59.5 PSF	47.0 PSF	58.0 PSF	45.8 PSF	49.6 PSF	39.1 PSF	48.3 PSF	38.2 PSF	39.6 PSF	31.3 PSF	38.7 PSF	30.5 PSF	247.00 LB-FT	257.9 LB	1116.3 LB	1085.7 LB
	36 "	51.1 PSF	40.3 PSF	51.1 PSF	40.3 PSF	42.6 PSF	33.6 PSF	41.6 PSF	33.6 PSF	34.0 PSF	26.9 PSF	34.0 PSF	26.9 PSF	247.00 LB-FT	221.5 LB	1030.9 LB	1031.6 LB

24"-36" STAND DEPTH (SPECIAL MINI-SPLIT OPTION):

UNIT DIMENSIONS (W x D x H)	STAND CLEAR HEIGHT	UNIT TO FRAME RATIO — (1) UNIT: (3) FRAMES — ANCHOR TYPE: 1 OR 4 — MAX ALLOWABLE LATERAL LOAD	MAX ALLOWABLE UPLIFT	ANCHORS TYPE: 2 OR 3 — MAX ALLOWABLE LATERAL LOAD	MAX ALLOWABLE UPLIFT	(2) UNITS: (4) FRAMES — ANCHOR TYPE: 1 OR 4 — MAX ALLOWABLE LATERAL LOAD	MAX ALLOWABLE UPLIFT	ANCHORS TYPE: 2 OR 3 — MAX ALLOWABLE LATERAL LOAD	MAX ALLOWABLE UPLIFT	(3) UNITS: (5) FRAMES — ANCHOR TYPE: 1 OR 4 — MAX ALLOWABLE LATERAL LOAD	MAX ALLOWABLE UPLIFT	ANCHORS TYPE: 2 OR 3 — MAX ALLOWABLE LATERAL LOAD	MAX ALLOWABLE UPLIFT	LOAD TRANSFER INFORMATION FOR USE WITH HOST STRUCTURE VERIFICATION ONLY — MAX. BASE MOMENT (M)	MAX. BASE SHEAR (V)	MAX. BASE UPLIFT (T)	MAX. BASE GRAVITY (C)
30" MAX. WIDTH 12" MIN. DEPTH 55" MAX. HEIGHT	18 "	82.5 PSF	65.1 PSF	82.5 PSF	65.1 PSF	82.5 PSF	65.1 PSF	82.5 PSF	65.1 PSF	82.5 PSF	65.1 PSF	79.2 PSF	62.5 PSF	199.70 LB-FT	341.5 LB	1420.2 LB	1585.0 LB
	24 "	82.5 PSF	65.1 PSF	82.5 PSF	65.1 PSF	82.5 PSF	65.1 PSF	80.5 PSF	63.6 PSF	82.5 PSF	65.1 PSF	67.2 PSF	53.0 PSF	212.80 LB-FT	286.2 LB	1330.4 LB	1510.4 LB
	30 "	82.5 PSF	65.1 PSF	82.5 PSF	65.1 PSF	82.5 PSF	65.1 PSF	82.5 PSF	65.1 PSF	80.0 PSF	63.2 PSF	71.1 PSF	56.1 PSF	247.00 LB-FT	275.3 LB	1422.0 LB	1599.6 LB
	36 "	82.5 PSF	65.1 PSF	82.5 PSF	65.1 PSF	82.2 PSF	64.9 PSF	76.3 PSF	60.2 PSF	68.5 PSF	54.1 PSF	63.6 PSF	50.2 PSF	247.00 LB-FT	235.6 LB	1335.3 LB	1521.6 LB

24"-36" STAND DEPTH (SPECIAL MINI-SPLIT OPTION) SCHEDULE NOTE: SEE DETAIL 1/16 FOR MINI-SPLIT UNIT TO STAND ATTACHMENT

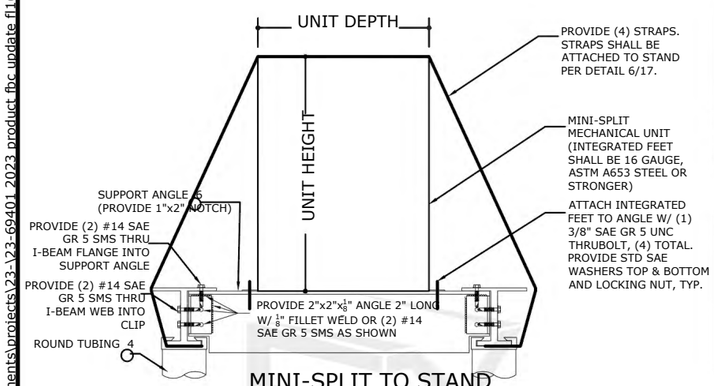

MINI-SPLIT TO STAND ATTACHMENT DETAIL

DETAIL 1/16 NOTES:
1. THE INSTALLER SHALL ENSURE INTEGRATED FEET OF MINI-SPLIT UNIT IS 16 GAUGE THICK MIN, ASTM 653 STEEL OR STRONGER.
2. INTEGRATED FEET HOLES SHALL ENSURE 3/4" MINIMUM EDGE DISTANCE TO ANY INTEGRATED FEET EDGE FOR EACH 3/8" Ø ANCHOR.
3. IF THE INSTALLER IS UNABLE TO VERIFY THESE REQUIREMENTS, THE BUILDING OFFICIAL SHALL REQUIRE A SITE-SPECIFIC EVALUATION TO ENSURE TIEDOWN STABILITY.

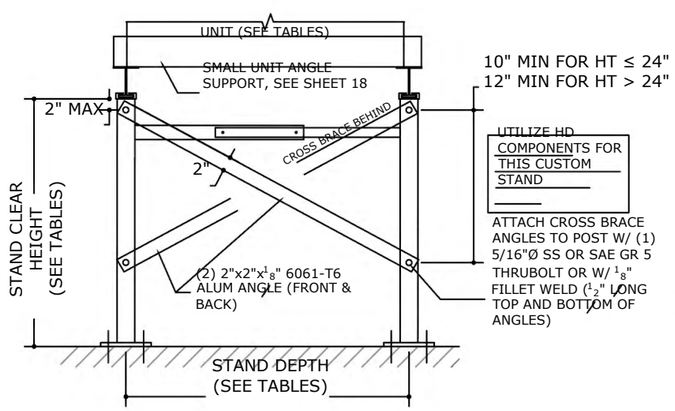

HD CUSTOM CROSS-BRACE ASSEMBLY ALLOWABLE CONFIGURATIONS:

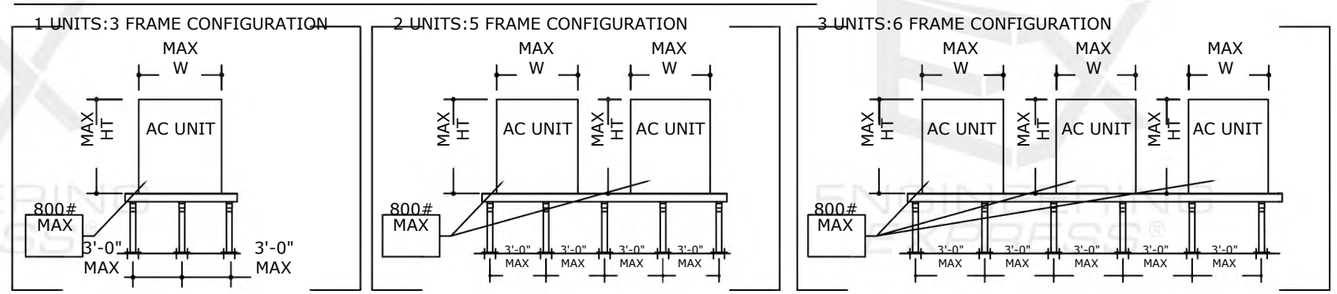

FRANK BENNARDO, P.E.
PE# 0046549 CA# 9885

FRANK L. BENNARDO LICENSE No PE0046549 STATE OF FLORIDA PROFESSIONAL ENGINEER

12/28/2023

DECEMBER 21, 2023

FL

FL 16921.1

ENGINEERING EXPRESS®
POSTAL ADDRESS:
2234 NORTH FEDERAL HWY #7664
BOCA RATON, FL 33431
ENGINEERINGEXPRESS.COM

PRECISION ALUMINUM PRODUCTS, INC.
1339 SW 1ST WAY
DEERFIELD BEACH, FL 33441
(954) 480-6919

ALUMINUM A/C STANDS
FLORIDA BUILDING CODE EIGHTH EDITION (2023)
FLORIDA STATEWIDE APPROVAL (FSA FL#16921.1)

REMARKS	DRWN	CHKD	DATE
PREV. SUBMITTAL (20-32768)	CSL	RWN	12/15/20
2023 FBC UPDATE & TECH. CHANGES	MRT	RWN	12/08/23

COPYRIGHT ENGINEERING EXPRESS®

23-69401

SCALE: NTS UNLESS NOTED

16 OF 18

12/21/2023 1:55 PM MILTON c:\users\milton\engineering express\production - documents\projects\23-\23-69401 2023 product fbc update fl16921\work\2023 fbc\drawings & cad\23-69401c - fl16921.1 - cad.dwg

FRANK BENNARDO, P.E.
PE# 0046549 CA# 9885

FRANK L. BENNARDO LICENSE No PE0046549 STATE OF FLORIDA PROFESSIONAL ENGINEER

12/28/2023

DECEMBER 21, 2023

FL

FL 16921.1

FRAME ASSEMBLY & UNIT TIE-DOWN DETAILS:

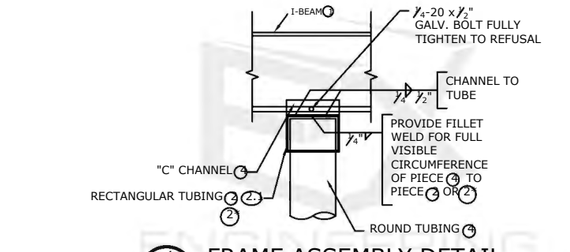

1/17 FRAME ASSEMBLY DETAIL

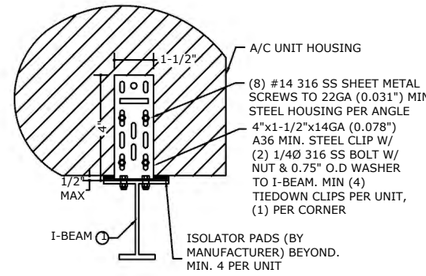

2/17 A/C UNIT TIE-DOWN DETAIL

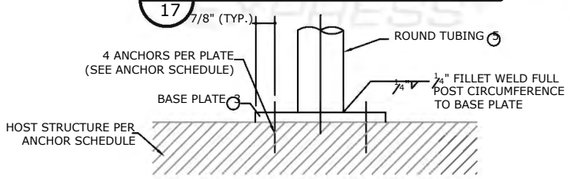

3/17 BASE PLATE DETAIL

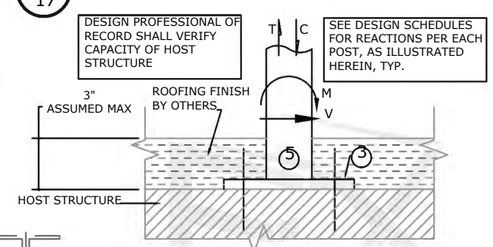

4/17 BASEPLATE REACTIONS

FOR ILLUSTRATIVE PURPOSES ONLY

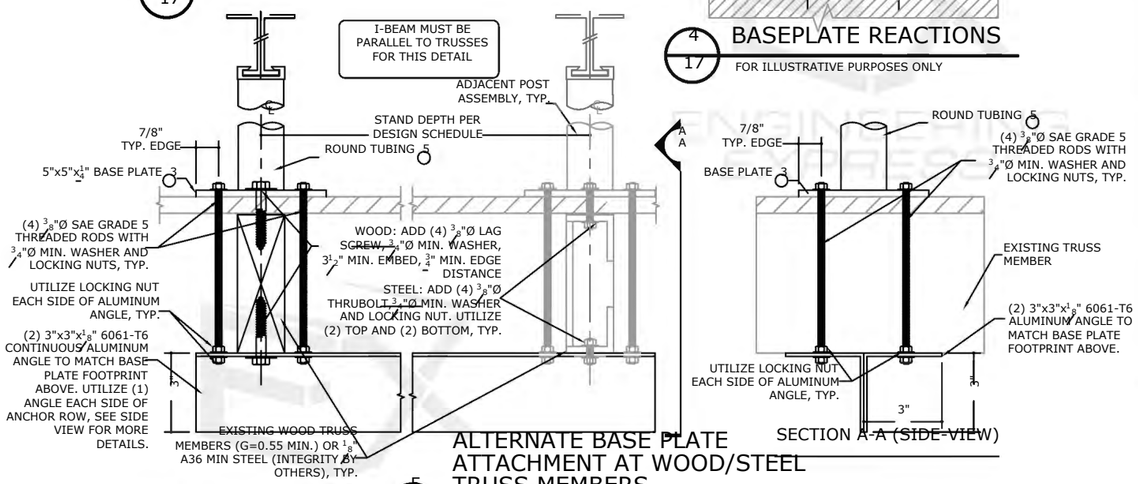

ALTERNATE BASE PLATE ATTACHMENT AT WOOD/STEEL TRUSS MEMBERS

SECTION A-A (SIDE-VIEW)

5/17 FOR USE AS AN ALTERNATE ATTACHMENT METHOD FOR ALL ANCHOR TYPES ON DESIGN SCHEDULE TABLES. SITE SPECIFIC DESIGN RECOMMENDED.

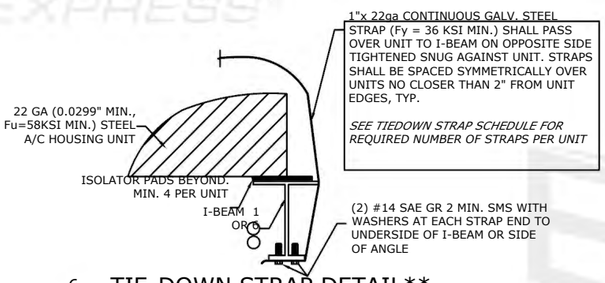

6/17 TIE-DOWN STRAP DETAIL**

NTS

SHALL BE USED **IN COMBINATION WITH ANY A/C UNIT TIE-DOWN DETAIL ON THIS SHEET

TIEDOWN STRAP SCHEDULE

MAX UNIT HEIGHT (in)	MIN UNIT DEPTH (in)	MAX LATERAL PRESSURE (psf)	NO. OF STRAPS REQUIRED (PER UNIT)
UP TO 24	12-19	UP TO 80	0
		UP TO 120	0
		UP TO 200	2
	20	UP TO 80	0
		UP TO 120	0
		UP TO 200	0
UP TO 30	12-19	UP TO 80	0
		UP TO 120	2
		UP TO 200	2
	20	UP TO 80	0
		UP TO 120	0
		UP TO 200	0
UP TO 36	12-19	UP TO 80	0
		UP TO 120	2
		UP TO 200	3
	20	UP TO 80	0
		UP TO 120	0
		UP TO 200	2
UP TO 40	14-23	UP TO 80	0
		UP TO 120	2
		UP TO 200	3
	24	UP TO 80	0
		UP TO 120	2
		UP TO 200	3
UP TO 48	16-23	UP TO 80	3
		UP TO 120	4
		UP TO 200	S
	24	UP TO 80	0
		UP TO 120	2
		UP TO 200	4
UP TO S4	16-23	UP TO 80	4
		UP TO 120	S
		UP TO 200	6
	24	UP TO 80	2
		UP TO 120	3
		UP TO 200	S
UP TO 60	SITE SPECIFIC DESIGN REQUIRED		

TIEDOWN STRAP SCHEDULE NOTE:
SEE DETAIL 1/16 FOR SPECIAL TIEDOWN CONFIGURATION FOR MINI-SPLIT UNITS WITH 30" MAX. WIDTH, 12" MIN. DEPTH & 55" MAX. HEIGHT.

ANCHOR SCHEDULE

FOR USE WITH DETAIL 3 ON THIS SHEET ONLY

ANCHOR TYPE	HOST STRUCTURE	ANCHOR DESCRIPTION
1	STEEL	(4) 3/8"Ø SAE GRADE 2 GALVANIZED BOLTS W/ NUT & 3/4"Ø MIN. WASHER, TO STRUCTURAL A36 STEEL MEMBERS (3/16" MIN HOST THICKNESS)
2	CONCRETE (3KSI MIN.)	(4) 3/8"Ø DEWALT SCREW-BOLT+ CONCRETE ANCHORS OR EQUIVALENT WITH 2-1/2" EMBEDMENT & 3" MIN EDGE DISTANCE, SPACING PER THE FOLLOWING = (BASE PLATE WIDTH - 1.75").
2A **	CONCRETE (5KSI MIN.)	(4) 1/2"Ø DEWALT MINI DROPIN CONCRETE ANCHORS WITH 1" EMBEDMENT & 6" MIN EDGE DISTANCE, SPACING PER THE FOLLOWING = (BASE PLATE WIDTH - 1.75").
2B **	CONCRETE (5KSI MIN.)	(4) 3/8"Ø DEWALT MINI DROPIN CONCRETE ANCHORS WITH 3/4" EMBEDMENT & 6" MIN EDGE DISTANCE, SPACING PER THE FOLLOWING = (BASE PLATE WIDTH - 1.75").
3	WOOD	SEE DETAIL 5/17: USE DETAIL 3/17 FOR GROUND MOUNT ONLY WHEN APPROVED BY EOR/BUILDING OFFICIAL (SEE NOTES BELOW). (4)-3/8Ø LAG SCREWS w/WASHER, 2-1/2" THREAD PENETRATION, 2" EDGE DISTANCE.
4	STEEL	(4) 5/16" SAE GRADE 5 SHEET METAL SCREWS WITH 5/8"Ø MIN. WASHER TO STRUCTURAL A36 STEEL MEMBERS (3/16" MIN HOST THICKNESS)

ANCHOR OPTION 2A NOTE
FOR ANCHOR OPTION 2A, MAXIMUM ALLOWABLE PRESSURES LISTED IN DESIGN SCHEDULES (ANCHOR TYPE: 2 OR 3) SHALL BE MULTIPLIED BY THE FOLLOWING FACTORS:

STD STAND = 0.50
HD STAND & HD CUSTOM BRACE STAND = 0.50
XHD STAND = 0.65
FIXED-HD = 0.60

ANCHOR OPTION 2B NOTE
FOR ANCHOR OPTION 2B, MAXIMUM ALLOWABLE PRESSURES LISTED IN DESIGN SCHEDULES (ANCHOR TYPE: 2 OR 3) SHALL BE MULTIPLIED BY THE FOLLOWING FACTORS:

STD STAND = 0.50
HD STAND & HD CUSTOM BRACE STAND = 0.50
XHD STAND = 0.50
FIXED-HD = 0.50

THE CONNECTION OF THE AC STAND TO THE SUPPORTING HOST STRUCTURE IS ASSUMED TO BE A RIGID CONNECTION. THE INSTALLER SHALL ENSURE THAT ANY ROTATION OF THE SUPPORTING HOST STRUCTURE IS STRICTLY PREVENTED. IN ADDITION, THE INSTALLER SHALL ENSURE THE HOST STRUCTURE CAN ADEQUATELY SUPPORT THE REACTIONS PROVIDED IN THIS APPROVAL.

IF THE INSTALLER IS UNABLE TO VERIFY THESE REQUIREMENTS, THE BUILDING OFFICIAL SHALL REQUIRE A SITE SPECIFIC EVALUATION TO ENSURE STAND STABILITY.

ANCHOR NOTES:

1. ANCHORS SHALL BE INSTALLED IN ACCORDANCE WITH MANUFACTURERS' RECOMMENDATIONS.
2. ENSURE MINIMUM EDGE DISTANCE AS NOTED IN ANCHOR SCHEDULE FOR EACH ANCHOR.
3. ALL CONCRETE SUBSTRATE SHALL HAVE MINIMUM COMPRESSIVE STRENGTH OF 3000 PSI, U.N.O. CONCRETE SUBSTRATE THICKNESS SHALL BE GREATER THAN OR EQUAL TO 1.5xANCHOR EMBEDMENT. INSTALL CONCRETE ANCHORS TO UN-CRACKED CONCRETE ONLY.
4. MINIMUM EMBEDMENT SHALL BE AS NOTED IN ANCHOR SCHEDULE. MINIMUM EMBEDMENT AND EDGE DISTANCE EXCLUDES ROOFING FINISHES.
5. WHERE EXISTING STRUCTURE IS WOOD TRUSSES, EXISTING CONDITIONS MAY VARY. FIELD VERIFY THAT FASTENERS ARE INTO ADEQUATE WOOD TRUSS MEMBERS, NOT INTO PLYWOOD.

ENGINEERING EXPRESS®
POSTAL ADDRESS:
2234 NORTH FEDERAL HWY #7664
BOCA RATON, FL 33431
ENGINEERINGEXPRESS.COM

PRECISION ALUMINUM PRODUCTS, INC.
1339 SW 1ST WAY
DEERFIELD BEACH, FL 33441
(954) 480-6919

ALUMINUM A/C STANDS
FLORIDA BUILDING CODE EIGHTH EDITION (2023)
FLORIDA STATEWIDE APPROVAL (FSA FL# 16921.1)

REMARKS	DRWN	CHKD	DATE
PREV. SUBMITTAL (20-32768)	CSL	RWN	12/15/20
2023 FBC UPDATE & TECH. CHANGES	MRT	RWN	12/08/23

COPYRIGHT ENGINEERING EXPRESS®

23-69401

SCALE: NTS UNLESS NOTED

12/21/2023 1:56 PM MILTON c:\users\milton\engineering express\production - documents\projects\23-\23-69401 2023 product fbc update fl16921\work\2023 fbc\drawings & cad\23-69401c - fl16921.1 - cad.dwg

12/21/2023 1:56 PM MILTON c:\users\milton\engineering express\production - documents\projects\23-\23-69401 2023 product fbc update fl16921\work\2023 fbc\drawings & cad\23-69401c - fl16921.1 - cad.dwg

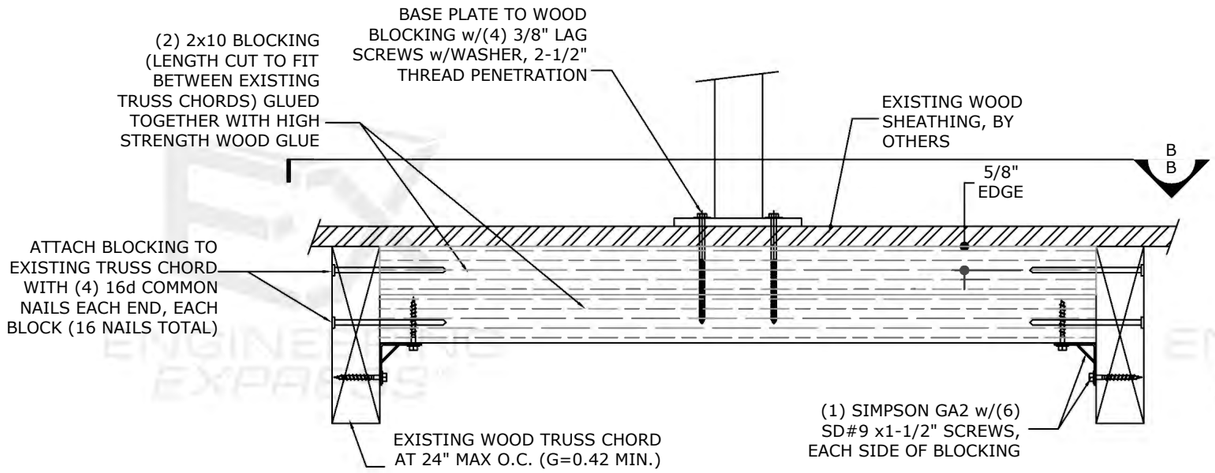

SECTION A-A (SECTION-VIEW)

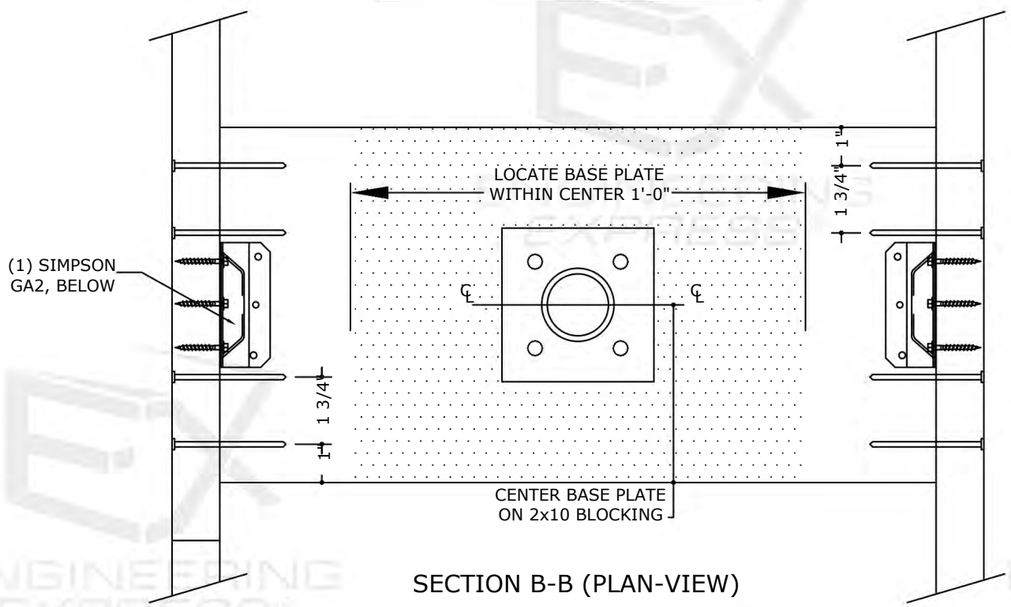

SECTION B-B (PLAN-VIEW)

ALTERNATE BASE PLATE ATTACHMENT AT WOOD TRUSS MEMBERS

1/18

FOR USE AS AN ALTERNATE ATTACHMENT METHOD FOR TO WOOD

NOTE: USE OF THIS DETAIL (1/18) IS RESTRICTED TO FOLLOWING:

- ONLY APPLICABLE FOR THE FOLLOWING STAND TYPES: STD, HD, FIXED-HD
- LIMITED TO 60% OF THE ALLOWABLE DESIGN PRESSURE LISTED IS THE DESIGN TABLES.

EXAMPLE:	MAX ALLOWABLE LATERAL LOAD PER DESIGN SCHEDULES	= 95 PSF	
	MAX ALLOWABLE UPLIFT LOAD PER DESIGN SCHEDULE	= 70 PSF	
	MAX ALLOWABLE LATERAL LOAD PER DETAIL (1/18)	= 95 PSF x (0.60)	= 57 PSF
	MAX ALLOWABLE UPLIFT LOAD PER DETAIL (1/18)	= 70 PSF x (0.60)	= 42 PSF

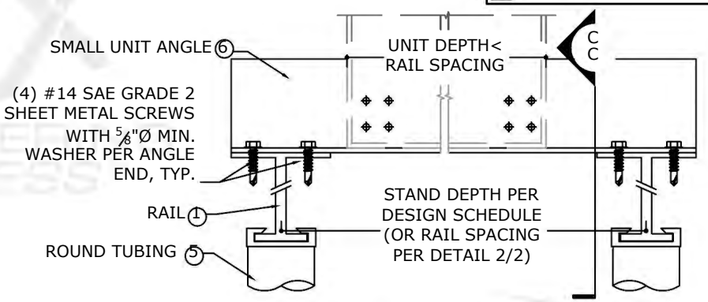

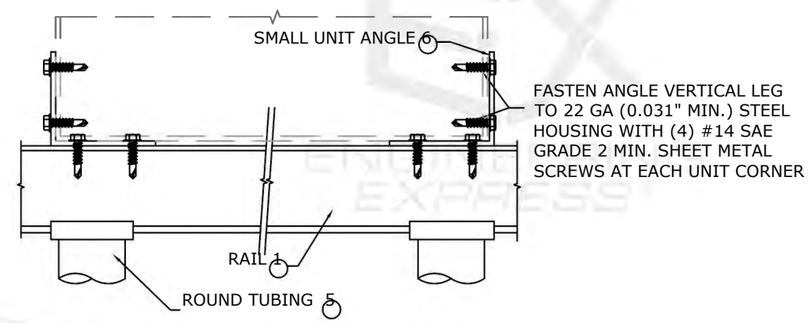

SECTION C-C (SIDE-VIEW)

SMALL UNIT ANGLE ATTACHMENT DETAIL

2/18

NTS

THE CONNECTION OF THE AC STAND TO THE SUPPORTING HOST STRUCTURE IS ASSUMED TO BE A RIGID CONNECTION. THE INSTALLER SHALL ENSURE THAT ANY ROTATION OF THE SUPPORTING HOST STRUCTURE IS STRICTLY PREVENTED. IN ADDITION, THE INSTALLER SHALL ENSURE THE HOST STRUCTURE CAN ADEQUATELY SUPPORT THE REACTIONS PROVIDED IN THIS APPROVAL.

IF THE INSTALLER IS UNABLE TO VERIFY THESE REQUIREMENTS, THE BUILDING OFFICIAL SHALL REQUIRE A SITE SPECIFIC EVALUATION TO ENSURE STAND STABILITY.

FRANK BENNARDO, P.E.
PE# 0046549 CA# 9885

FRANK L. BENNARDO LICENSE No PE0046549 STATE OF FLORIDA PROFESSIONAL ENGINEER

12/28/2023

DECEMBER 21, 2023

FL

FL 16921.1

ENGINEERING EXPRESS®
POSTAL ADDRESS:
2234 NORTH FEDERAL HWY #7664
BOCA RATON, FL 33431
ENGINEERINGEXPRESS.COM

PRECISION ALUMINUM PRODUCTS, INC.
1339 SW 1ST WAY
DEERFIELD BEACH, FL 33441
(954) 480-6919

ALUMINUM A/C STANDS
FLORIDA BUILDING CODE EIGHTH EDITION (2023)
FLORIDA STATEWIDE APPROVAL (FSA FL# 16921.1)

REMARKS	DRWN	CHKD	DATE
PREV. SUBMITTAL (20-32768)	CSL	RWN	12/15/20
2023 FBC UPDATE & TECH. CHANGES	MRT	RWN	12/08/23

COPYRIGHT ENGINEERING EXPRESS®

23-69401

SCALE: NTS UNLESS NOTED