CITY OF BRADENTON DEVELOPMENT PERMIT APPLICATION

101 Old Main Street, Bradenton, FL 34205

Phone: 941-932-9414 | Email: permitting@bradentonfl.gov

Permit Number _____ **Site Improvement Plan #** _____

Related Permit #_____ **Stop Work Order:** ___**Yes** ___**No**

___**Accessory Structure**
___**Aluminum**
___**Antenna**
___**Commercial (New)**
___**Commercial (Add/Alt)**
___**Concrete**
___**Deck/Stairs**
___**Demolition**
___**Driveway/Sidewalk**
___**Dumpster**
___**Electrical and/or Low Voltage**
___**Exterior Door & Window**
___**Fence**
___**Generator**
___**Mechanical and/or Gas**
X__**Mobile Home or Modular**
___**Plumbing**
___**Residential (New)**
___**Residential (Add/Alt)**
___**Roof**
___**Siding/Soffit/Fascia**
___**Sign**
___**Solar**
___**Swimming Pool/Spa**
___**Tent and/or Temp Use**
___**Waterfront**
___**Other**

COST OF CONSTRUCTION $ 122,163.00 **PARCEL I.D. #** 4456414400

JOB ADDRESS: 1704 27TH AVE W, BRADENTON, FL 34205-6304

PROPERTY OWNER: BLACK, ALLAN JOSEPH **PHONE**_____ **EMAIL**_____

BUSINESS/SUBDIVISION/MH PARK: BRADENTON TROPICAL PALMS **LOT** 1704 **BLOCK**_____

DESCRIPTION OF WORK: MOBILE HOME INSTALL 15'4" X 42'Replacement

***ADDITIONAL WORK REQUIRED:** X__**ELECTRICAL** X__**MECHANICAL** X__**PLUMBING** ___**GAS** ___**MASONRY** ___**CONCRETE** ___**ROOFING**

Zoning District: _____

****PRIVATE PROVIDER**** (Name): _____

BUILDING: Flood Zone _____ New (sq. ft.) _____ Adding (sq. ft.) _____ Renovating (sq. ft.) _____

FBC Occupancy Type: _____ FBC Construction Type: _____ # of Stories: 1 Building Height: 15'

Area per Story _____ Area Under A/C 630 # of Bedrooms 2 # of Bathrooms 1 # of Units 1

CONTRACTOR: KENNTH KINNEY JR **STATE CERT./REG. #** IH1126379

AGENT/CONTACT PERSON NANCY ARMSTRONG/ SEAN SWONGER **PHONE** 863-529-2370

EMAIL Nancyarmstrong61@gmail.com / sdswonger@gmail.com

DATE 3/15/24 **SIGNATURE** Sean Swonger **PRINT NAME** Sean Swonger

OFFICIAL USE ONLY:

REVIEW: BLDG_____**MECH**_____**ELEC**_____**PLMB**_____**FIRE**_____**ZONING**_____**FLOOD**_____**PW**_____

Application is hereby made to obtain a permit to do the work and installations as indicated. I certify that no work or installations have commenced prior to the issuance of a permit and that all work will be performed in accordance with the standards of all laws and ordinances regulating construction in The City of Bradenton, Florida, whether specified herein or not. I understand that a separate permit may be required to perform electrical, plumbing, sign, well, pool, furnace, boiler, heater, air conditioning, storage tank, demolition or any other types of work as specified by The City of Bradenton. I further certify that I have read and examined this application and know the same to be correct, that all work shall be in compliance with the Florida Building Code 8th Edition, 2023, the National Electric Code 2020 and all applicable laws regulating construction and zoning, and that the building permit may be revoked in the case of a false statement or misrepresentation in the application and/or plans on which the permit was approved.

It shall also be agreed that the owner has been advised of and understands the applicability of the Construction Lien Law (FSS 713.135) and that Impact Fees shall be determined with the application for a building permit and shall be due before Final Inspection. Permit Fees shall be payable at issuance of a building permit.

WARNING TO OWNER: YOUR FAILURE TO RECORD A NOTICE OF COMMENCEMENT MAY RESULT IN YOUR PAYING TWICE FOR IMPROVEMENTS TO YOUR PROPERTY. A NOTICE OF COMMENCEMENT MUST BE RECORDED AND POSTED ON THE JOB SITE BEFORE THE FIRST INSPECTION. IF YOU INTEND TO OBTAIN FINANCING, CONSULT WITH YOUR LENDER OR AN ATTORNEY BEFORE COMMENCING WORK OR RECORDING YOUR NOTICE OF COMMENCEMENT.

PLEASE SIGN BELOW*(Note: Only one signature is required. The Owner only signs if acting as Owner-Contractor.)*

Owner As Contractor
Signature: _____ Print Name: _____

Contractor
Signature: _____ Print Name: _____

Authorized Agent
Signature: Sean Swonger Print Name: Sean Swonger

Date: 3/15/24

STATE OF FLORIDA
CITY OF BRADENTON

The foregoing instrument was acknowledged before me by means of ✔ physical presence or ___ online notarization this 15 day of March, 2024, by Sean Swonger, who is personally known to me or who has produced as identification DL Expiration Date: _____ and who did/did not take an oath.

Notary Public Signature Nancy Armstrong **Notary Public Stamp Here**

NANCY MIMS ARMSTRONG
Commission # HH 447144
Expires September 24, 2027

MANATEE COUNTY
PROPERTY APPRAISER
CHARLES E. HACKNEY

Property Record Card

Created at: https://www.manateepao.gov on January 13, 2024

Parcel ID: 4456414400
Ownership: BLACK, ALLAN JOSEPH
Owner Type: INDIVIDUAL
Mailing Address: BLACK, ALLAN JOSEPH, 11 MAIN ST, SYDNEY NS B1P6Z8, CANADA

Situs Address: 1704 27TH AVE W, BRADENTON, FL 34205-6304
Jurisdiction: CITY OF BRADENTON
Tax District: 0021; CITY OF BRADENTON
Market Area: 10; WEST BRADENTON

Sec/Twp/Rge: 02-35S-17E
Neighborhood: 5129; BRADENTON TROPICAL PALMS
Cooperative: 4456400; BRADENTON TROPICAL PALMS CO-OP; LOT 1704

Parcel Type: REAL PROPERTY
Parcel Created: 02/27/1998
Map Number: 5B02

Land Use: 0055; CO-OP-VACANT LOT
Land Size: 0.0436 Acres or 1,899 Square Feet

DESCRIPTION

UNIT 1704 27 AW BRADENTON TROPICAL PALMS A RESIDENTIAL COOP PI#44564.1440/0

2023 FINAL CERTIFIED VALUES

	County	School	IndSpcDist	Municipality
Land Value:	25,500	25,500	25,500	25,500
Improvement Value:	0	0	0	0
Total Market Value:	25,500	25,500	25,500	25,500
Land Classified Agricultural:	0	0	0	0
Classified Use Value:	0	0	0	0
Classified Use Savings:	0	0	0	0
Ineligible for 10% Cap:	0	25,500	0	0
Eligible for 10% Cap Next Year:	0	0	0	0
Eligible for 10% Cap This Year:	25,500	0	25,500	25,500
10% Cap Savings:	7,931	0	7,931	7,931
Ineligible for SOH Cap:	25,500	25,500	25,500	25,500
Eligible for SOH Cap Next Year:	0	0	0	0
Eligible for SOH Cap This Year:	0	0	0	0
SOH Cap Savings:	0	0	0	0
Assessed Value:	17,569	25,500	17,569	17,569
Exempt Value:	0	0	0	0
Taxable Value:	17,569	25,500	17,569	17,569

ADDRESSES ASSIGNED TO THE PROPERTY

1704 27TH AVE W, BRADENTON, FL 34205-6304

PROPERTY APPRAISER INSPECTIONS

08/09/2021	TLW	INSPECTION BY IMAGE TECHNOLOGY	5 YEAR STATUTORY REVIEW
09/20/2016	JAH	ON SITE INSPECTION	5 YEAR STATUTORY REVIEW

LAND INFORMATION

#	Type	Code	Ag	Ex	Sqft	Acres	Rate	Value	Actual	Effect	Depth (Frontage)	Table (Frontage)	Factor (Depth)	Override (Depth)	Influences	Zoning
1	U	100	No	0%	1,899	0	30,000	25,500					1.0			BR_R-4

SALES INFORMATION

Salekey	Sale Date	Book/Page/Inst #	Instrument Type	V / I	Qual Code	Sale Price	Grantee	Grantor
2420494	4/10/2023	202341041896	LEASE ASSIGNMEN	V	01	$27,500	BLACK, ALLAN JOSEPH	BRADENTON TROPICAL PALMS INC
1535762	1/1/1931	UNRECORDED	UNKNOWN	V	37		BRADENTON TROPICAL PALMS INC	

Vinyl Skirting Installations

Installation Details

Careful attention to a few basic details will insure that your vinyl skirting will provide a beautiful, easily installed, completely accessible exterior with a minimum of maintenance. Vinyl skirting is easily installed over any terrain, requires no special tools and never needs painting. Following these basic installation techniques will assure that our skirting will contribute to the beauty of your home's exterior.

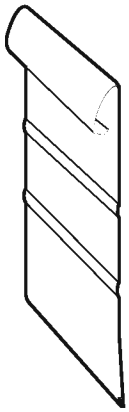

Top Trim Back Component

Tools you will need

Hammer • Screwdriver • Snips • Plumb Bob or Level • Tape Measure
Power Saw with Fine Tooth Blade • Snap Lock Tool • Chalk Line
• Utility Knife

Important

1) Use either a power saw with a fine tooth blade mounted with reverse rotation, or aviation snips to cut skirting components.

2) To allow for normal expansion and contraction, fasten the Top Trim Back component(s) in the center of the nailing slots. Fasten positively to the surface of the unit at every slotted hole, leaving 1/2" between lengths. **Do not butt the ends.** Overlap the Top Trim Front component(s) approximately 1" at joints. Allow 1/2" between pieces of the Bottom Channel component(s) when installing.

3) Do not drive the fasteners too tightly. Nails or screws offer excellent holding power, but if driven too tightly, the vinyl can, under normal expansion and contraction, become distorted. These fasteners should be driven in the middle of the nailing slot just short of touching the Top Trim Back component(s). Nail or screw to achieve 3/4" penetration into a solid wood substance. Fasten to allow part to expand and contract during the normal change in ambient temperature. **Do not fasten tight.** Allow 1/16" gap between fastener head and part.

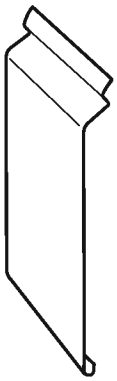

Top Trim Front Component

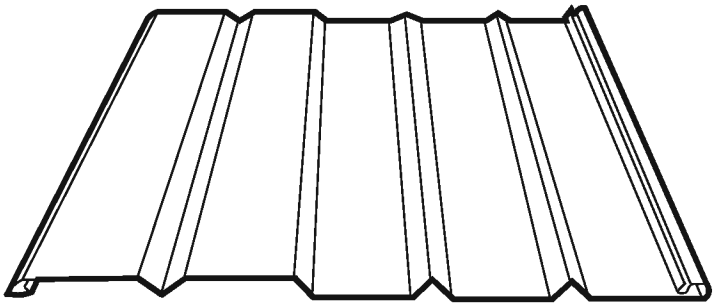

Skirting Panel

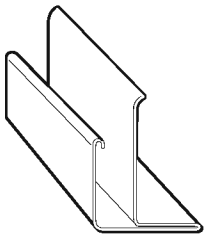

Bottom Channel Component

Vinyl Skirting Installations

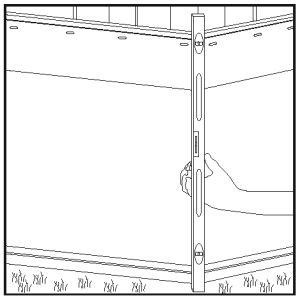

Figure 1

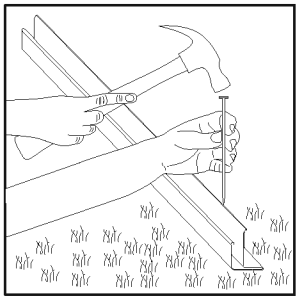

Figure 2

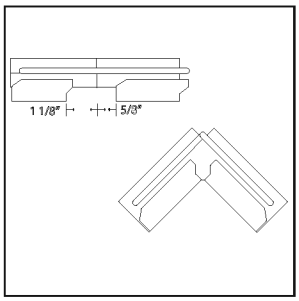

Figure 3

Step 1…

Laying the Bottom Channel Components

A level or plumb line should be used to establish the location of the Bottom Channel. The taller backside of the Bottom Channel should be located directly beneath the outside bottom edge of the home, where the Top Trim Back component will be attached *(see figure 1)*. To prevent grass from growing around the base of the skirting and provide a non-shifting base for the ground spikes, 9" asphalt roof starter should be installed around the home. The roof starter also reduces the possibility of the vinyl skirting panels being damaged from the use of a powered string trimmer. “Weed-Eater” type trim units will damage the skirting and is not covered by the warranty.

Attach the Bottom Channel component directly to the ground through the prepunched holes *(see figure 2)*. Spikes are required every 24 inches…extra holes are provided in the Bottom Channel component for convenience. Another spike or a drift punch may be used to drive spikes in completely. To allow for expansion, leave a 1/2" gap between each section of the Bottom Channel component. To form clean, attractive corners, the Bottom Channel component can be notched with snips *(see figure 3)* and then bent to the desired angle. *(Attached to the ground as shown in figure 4)*.

Note: in high wind areas; where ground below the unit is spongy; or where ground is loose from recent excavation and has not yet settled, it is advisable to fasten bottom channel to treated wooden stakes. For installation on concrete, use 3/4" masonry nail instead of ground spike. “Liquid Nail” cement or other similar methods of setting a fastener directly to concrete can also be used.

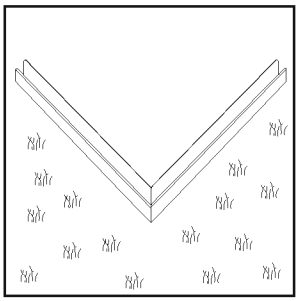

Figure 4

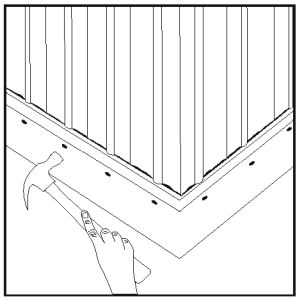

Figure 5

Step 2…

Mounting Top Trim Back Components

First determine where the Top Trim Back component(s) will mount on the lower part of the home. The bottom edge of the Top Trim Back component can extend below the bottom edge of the home if there is a solid support for nailing and a solid bearing for the Top Trim Front component against the side of the home. It is helpful to mark a line around the bottom of the home with a chalk line or other method to assure a straight line where the Top Trim Back component is to be installed.

The Top Trim Back component is installed by driving the fasteners in the middle of every slot *(see figure 5)*. ***Do not fasten tightly!*** (see fastening instructions on front page.) **Do not cut Top Trim Back components at the corners**. Gently bend over a sharp edge of a cutting table or a similar surface to form a corner *(see figure 6)*.

If the installation is made in extremely cold weather, the vinyl should be warmed to room temperature before bending. Warming will avoid the likelihood of cracking.

Step 3…

Cutting Top Trim Back Components

The Top Trim Back component is constructed with two parallel ridges at intervals below the nailing slots *(see figure7)*. These ridges may be used to measure the distance from the ground to the lower ridge. In cold weather, measure to the top ridge; In warm weather, measure to the bottom ridge. If the ground is level, several panels may be cut at one time using a hand power saw. ***Remember, if a power saw is to be used, mount a fine-toothed blade in reverse position*** *(see figure 8)*.

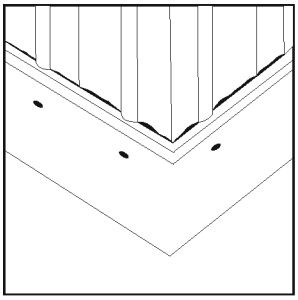

Figure 6

Locking the Skirting Panels

A snap lock tool is used to punch locking tabs on the outside bottom edge of each skirting panel *(see figure 9)*. When the panel is installed, it becomes locked in the Bottom Channel component. This feature assures retention of the panel in the Bottom Channel. ***Note:*** When installing in a high wind area, you may also punch locking tabs at the top of the panel for added locking strength.

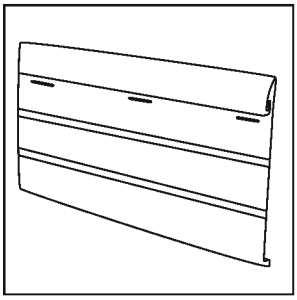

Figure 7

Self-aligning panels easily snap and slide into place *(see figure 10)*. Be certain that each skirting panel positively interlocks with the skirting panel adjoining it.
Note: (above 36" panel height, a framing support system should be considered.)

Installing the Skirting Panels

Panel can be installed by setting into the Bottom Channel and leaning against the top trim back. Lock the next panel as shown in figure 10. Panels should not be cut but bent around corners as shown in figure 11.

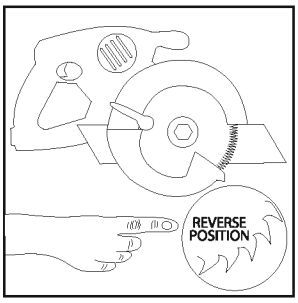

Figure 8

Fitting Skirting Panels Around Service Connections

Cutting and fitting to virtually any shape or radius is easily done with Vinyl Skirting. Using aviation snips, cut the panel to fit around the connection. Cut the panel from the side – **not from the top or bottom.** Keep snip points open as if cutting cloth to avoid cracking panels.

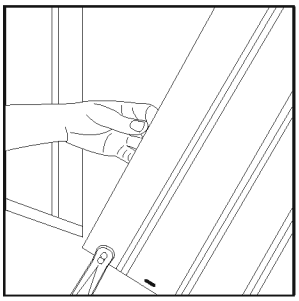

Figure 9

CAUTION

Proper installation of manufactured home skirting requires that the Top Back component be fastened loosely so the panel will slide freely in the nail slots. This can be accomplished by leaving the fastener 1/16" to 1/8" from the face of the panel. The fastener must penetrate a solid surface by 3/4".

Do not place outdoor cookers near the vinyl skirting because the heat will distort the panels. *Any heat source must be kept away from the panels or damage may occur.*

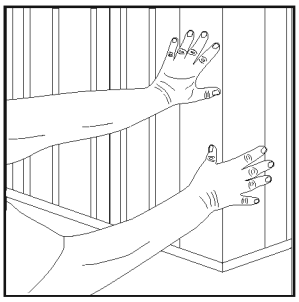

Figure 11

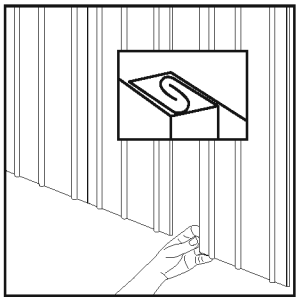

Figure 10

Step 4…

Installing the Top Trim Front Component

The Top Trim Front component(s) installs easily by snapping the top edge of its spring lock into the installed Top Trim Back component. Be sure to push the Top Trim Front component all the way into the Top Trim Back component **until it "snaps" into place.**

Each of the 15 pieces of the Top Trim Front components in the trim kit are notched 2" on one end *(see figure 12)* to permit overlapping. Overlap ends of adjoining Top Trim Front component(s) approximately 1".

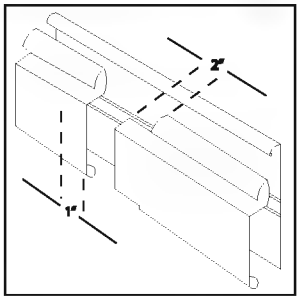

Figure 12

Cutting Additional Corners

If inside corners are needed, trim strips can be easily cut with aviation snips to form attractive corner joints by cutting a 45° mitre on adjacent ends and butting. If extra outside corners are required (for porches or add-on rooms), notch the trim strips as shown (see figure 13), bend around the corner and snap into place. Allow at least 3' of trim strip on each side of the corner.

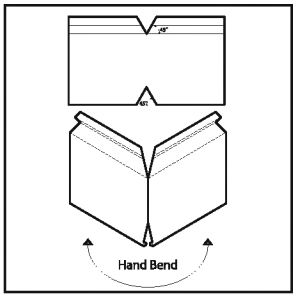

Figure 13

Easy Access

Access can be gained at virtually any point by simply lifting the Top Trim Front component and sliding out the desired number of panels. Accessibility to the area under the unit is available whenever desired.

Final Configuration

Please review the drawing to the right that shows how the components and skirting panels look after installation is complete.

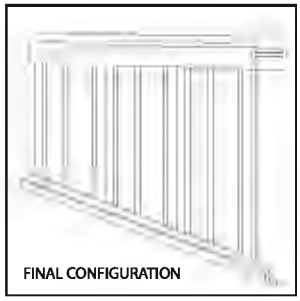

VGuard
VINYL SKIRTING PROTECTOR

Figure 14

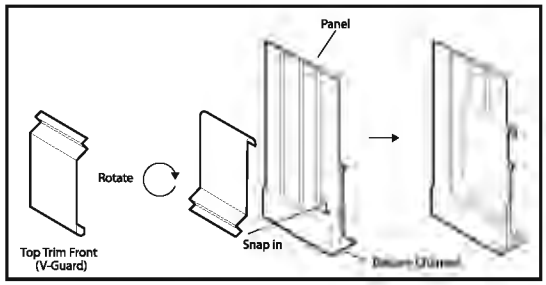

V-Guard Installation - (if applicable)

Installing the V-Guard Component

V-Guard Vinyl Skirting Protector component(s) installs easily by snapping the bottom edge of its spring lock into the Bottom Channel component. Be sure to push the V-Guard trim all the way into the Bottom Channel component **until it "snaps" into place.** *(see figure 14)*

Cutting additional corners

If inside corners are needed, V-Guard trim can be easily cut with aviation snips to form attractive corner joints by cutting a 45° mitre on adjacent ends and butting. If extra outside corners are required (for porches or add-on rooms), notch the V-Guard trim component, bend around the corner and snap into place. Allow at least 3" of V-Guard component trim on each side of the corner.

STYLECREST®
Style Crest, Inc.
2450 Enterprise St.
Fremont, Ohio 43420
800.945.4440
www.stylecrestproducts.com

Printed in U.S.A © Copyright 2012 02/12 **306133014**

HANDRAIL GRIP SIZE

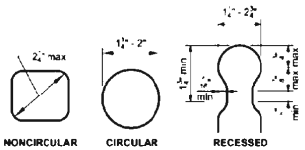

*HANDRAIL HEIGHT, MEASURED VERTICALLY FROM THE SLOPED PLANE ADJOINING THE TREAD NOSING, OR FINISH SURFACE OF RAMP SLOPE, SHALL BE NOT LESS THAN 34 INCHES AND NOT MORE THAN 38 INCHES.

*HANDRAIL SHALL BE PROVIDED ON AT LEAST ONE SIDE OF EACH CONTINUOUS RUN OF TREADS OF FLIGHT WITH FOUR OR MORE RISERS.

*HANDRAIL ASSEMBLIES AND GUARDS SHALL BE DESIGNED TO RESIST A LOAD OF 50 PLF APPLIED IN ANY DIRECTION AT THE TOP AND TO TRANSFER THIS LOAD THROUGH THE SUPPORTS TO THE STRUCTURE.

*HANDRAILS FOR STAIRWAYS SHALL BE CONTINUOUS FOR THE FULL LENGTH OF THE FLIGHT, FROM A POINT DIRECTLY ABOVE THE TOP RISER OF THE FLIGHT TO A POINT DIRECTLY ABOVE THE LOWEST RISER OF THE FLIGHT. HANDRAIL ENDS SHALL BE RETURNED OR SHALL TERMINATE IN NEWEL POSTS OR SAFETY TERMINALS. HANDRAILS ADJACENT TO A WALL SHALL HAVE A SPACE OF NOT LESS THAN 1-1/2 INCHES BETWEEN THE WALL AND THE HANDRAILS.

Richter ENGINEERING, INC.

Digitally signed by Mark V Richter
Date: 2024.01.12 11:32:12 -05'00'

STAIR TREAD AND RISERS

THE MAXIMUM RISER HEIGHT SHALL BE 7-3/4 INCHES. THE RISER SHALL BE MEASURED VERTICALLY BETWEEN LEADING EDGES OF THE ADJACENT TREADS. THE GREATEST RISER HEIGHT WITHIN ANY FLIGHT OF STAIRS SHALL NOT EXCEED THE SMALLEST BY MORE THAN 3/8 INCH. OPEN RISERS ARE PERMITTED PROVIDED THAT THE OPENINGS LOCATED MORE THAN 30 INCHES, AS MEASURED VERTICALLY, TO THE FLOOR OR GRADE DO NOT PERMIT THE PASSAGE OF A 4-INCH DIAMETER SPHERE.

THE MINIMUM TREAD DEPTH SHALL BE 10 INCHES. THE TREAD DEPTH SHALL BE MEASURED HORIZONTALLY BETWEEN THE VERTICAL PLANES OF THE FOREMOST PROJECTION OF ADJACENT TREADS AND AT A RIGHT ANGLE TO THE TREAD'S LEADING EDGE. THE GREATEST TREAD DEPTH WITHIN ANY FLIGHT OF STAIRS SHALL NOT EXCEED THE SMALLEST BY MORE THAN 3/8 INCH.

THE RADIUS OF CURVATURE AT THE LEADING EDGE OF THE TREAD SHALL BE NO GREATER THAN 9/16 INCH. A NOSING NOT LESS THAN 3/4 INCH BUT NOT MORE THAN 1-1/4 INCHES SHALL BE PROVIDED ON STAIRWAYS WITH SOLID RISERS. A NOSING IS NOT REQUIRED WHERE THE TREAD DEPTH IS A MINIMUM OF 11 INCHES.

THE GUARDS MAYBE WOOD, ALUMINUM, VINYL, OR EQUIVALENT.

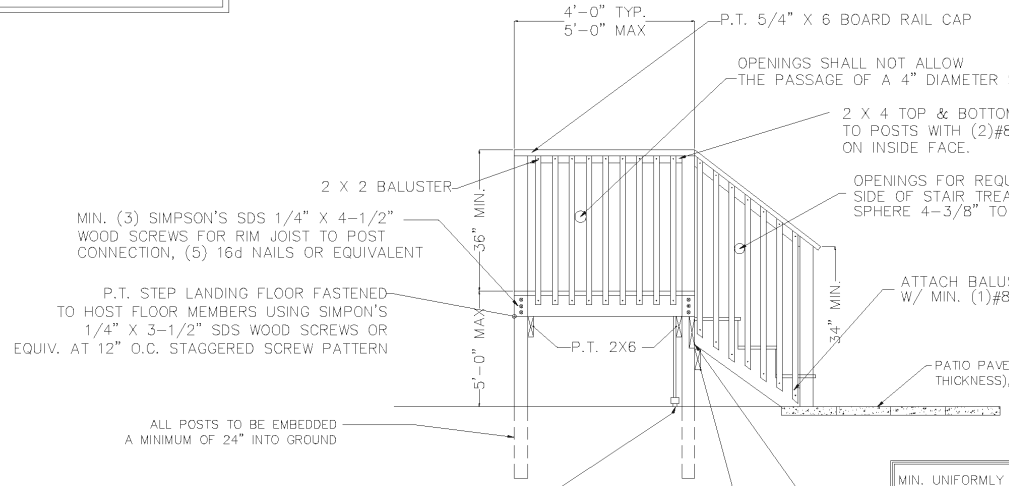

5'-0" LANDING HEIGHT = 8 STEPS (MIN.)

STAIR AND LANDING ILLUMINATION REQUIRED (PROVIDED BY LIGHT AT EXTERIOR DOOR) (ILLUMINATION LEVEL SHALL BE NOT LESS THAN 1 FOOTCANDLE AT THE WALKING SURFACE)

CONCRETE OPTION:
IF STEPS ARE INSTALLED ON EXISTING CONCRETE, THE GROUND ANCHORS AND TIEDOWN STRAP CAN BE OMITTED.

THE P.T. 4 X 4 POSTS SHALL BE ANCHORED TO THE EXISTING CONCRETE SLAB USING SIMPSON'S L-BRACKET OR EQUIVALENT.

MIN. UNIFORMLY DISTRIBUTED LIVE LOAD – STAIRS = 40 PSF

GUARD DETAIL

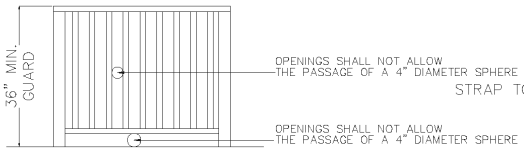

1/8" GALVANIZED CABLE COIL (7 X 7 OR 7 X 19 CONSTRUCTION) MAYBE USED INSTEAD OF THE 1-1/4" WIDTH TIE-DOWN STRAP

NOTES:
1.) HANDRAIL ASSEMBLIES AND GUARDS SHALL BE DESIGNED TO RESIST A CONCENTRATED LOAD OF 200 POUNDS IN ACCORDANCE WITH SECTION 4.5.1 OF ASCE 7.
2) IMMEDIATE RAILS, BALUSTERS, AND PANEL FILLERS SHALL BE DESIGNED TO RESIST A CONCENTRATED LOAD OF 50 POUNDS IN ACCORDANCE WITH SECTION 4.5.1 OF ASCE 7.

NOTE:
CONTRACTOR SHALL BE RESPONSIBLE FOR VERIFYING ALL DIMENSIONS AND CONDITIONS PRIOR TO CONSTRUCTION.

ALL STAIR COMPONENTS TO BE PRESSURE TREATED LUMBER

ALL FASTENERS IN CONTACT WITH P.T. LUMBER TO BE HOT DIP GALVANIZED OR STAINLESS STEEL

THIS ITEM HAS BEEN ELECTRONICALLY SIGNED AND SEALED BY MARK V. RICHTER, P.E. #56196 ON THE DATE AND/OR TIME USING A DIGITAL SIGNATURE. PRINTED COPIES OF THIS DOCUMENT ARE NOT CONSIDERED SIGNED AND SEALED AND THE SIGNATURE MUST BE VERIFIED BY THIRD PARTY CERTIFICATE AUTHORITY ON ANY ELECTRONIC COPY. (FAC 61G15-23.004)

01-08-2024
SENYB ENGINEERING, LLC
CA LIC. NO: 30244

These plans and specifications comply with Section 301.2.1 of the 2023 FBC-Residential (8th Edition)

V_{ULT} =ULTIMATE DESIGN WIND SPEED = 170 MPH (RISK CATEGORY II BUILDING, EXPOSURE "C")

V_{ASD} =NOMINAL DESIGN WIND SPEED = 132 MPH (TABLE 1609.3.1) (RISK CATEGORY II BUILDING, EXPOSURE "C") (3 second gusts)

INTERNAL PRESSURE COEFFICIENT = +0.18 AND -0.18

50 W. Central Ave., Ste. B
Lake Wales, FL 33853
Office: 863-589-5980
Email: engineer@senybengineering.com

These details and plans are confidential and proprietary materials. These materials are provided to the recipient for specific purposes and shall not be copied or otherwise reproduced and/or distributed for any purpose other than intended by Senyb Engineering Services.

These details and plans are the property of Senyb Engineering Services

ALL RIGHTS RESERVED.
© COPYRIGHT 2023

1SIES
ONE STOP SOLUTION SERVICES
1st Engineering and Design Company

Project Title: Site Construction
Drawn By: J.F.P
Date: 01-08-2024
Checked:
Revised:
Customer:
Client:
Address:
Drawing Scale: N.T.S.

Drawing Number:
S1
STAIR CONSTRUCTION

Senyb Engineering Services
50 W. Central Ave.
Lake Wales, FL 33853
© COPYRIGHT 2020

OLIVER Technologies, Inc.
467 Swan Ave • Hohenwald, TN 38462 • (800) 284-7437 • www.olivertechnologies.com • Fax (931) 796-8811

INSTALLATION USING CONCRETE RUNNER/ FOOTER

15. A concrete runner, footer or slab may be used in place of the steel ground pan.
    a) The concrete shall be minimum 2500 psi mix
    b) A concrete runner may be either longitudinal or transverse, and must be a minimum of 8" deep with a minimum width of 16 inches longitudinally or 18 inches transverse to allow proper distance between the concrete bolt and the edge of the concrete (see below).
    c) Footers must have minimum surface area of 441 sq. in. (I.e. 21" square), and must be a minimum of 8" deep.
    d) If a full slab is used, the depth must be a 4" minimum. Special inspection of the system bracket installation is not required. Footers must allow for at least 4" from the concrete bolt to the edge of the concrete.

NOTE: The bottom of all footings, pads, slabs and runners must be per local jurisdiction.

LONGITUDINAL: (Model 1101 LC "V")

16. When using Part# 1101-W-CPCA (wetset) simply install the bracket in runner/footer **OR** When installing in cured concrete use Part# 101-D-CPCA (dryset}. The 1101 (dryset) CA bracket is attached to the concrete using (2) S/8"x3" concrete wedge bolts (Simpson part# S162300H 5/8" X 3" or Powers equivalent). Place the CA bracket in desired location. Mark bolt hole locations, then using a 5/8" diameter masonry bit, drill a hole to a minimum depth of 3". Make sure all dust and concrete is blown out of the holes. Place wedge bolts into drille holes, then place 1101 (dry set) CA bracket onto wedge bolts and start wedge bolt nuts. Take a hammer and lightly drive the wedge bolts down by hitting the nut (making sure not to hit the top of threads on bolt). The sleeve of concrete wedge bolt needs to be at or below th1 top of concrete. Complete by tightening nuts.

LATERAL: (Model 1101 TC "V"I

17. For wet set (part# 1101-W-TACA) installation simply install the anchor bolt into runner/footer. For dry set installation (part# 1101-D-TACA mark bolt hole locations, then using a 5/8" diam. masonry bit. drill a hole to a minimum depth of 3". Make sure all dust and concrete is blown out of the hole. Place wedge bolts (Simpson part #5162300H 5/8" X 3" or Powers equivalent) into (D) concrete dry transverse connector and into drilled hole. If needed, take a hammer and lightly drive the wedge bolts down by hitting the nut (making sure not to hit the top of threads on bolt), then remove the nut. The sleeve of concrete wedge bolt needs to be at or below the top of concrete.
18. When using part# 1101 CVW (wetset) or 1101 CVD (dryset), install per steps 17 & 18.

Notes:
1. **LENGTH OF HOUSE IS THE ACTUAL BOX SIZE**
2. **0 = = LOCATION OF TRANSVERSE BRACING ONLY**
3. **[] = LOCATION OF LONGITUDINAL BRACING ONLY**
4. **[3= = TRANSVERSE AND LONGITUDINAL LOCATIONS**

ALL WIDTHS AND LENGTHS UP TO 52'

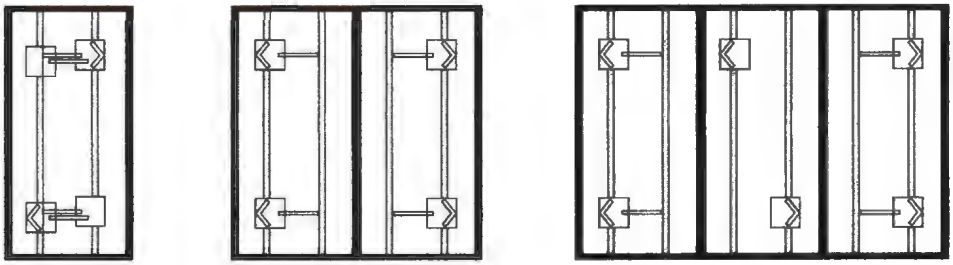

ALL WIDTHS AND LENGTHS OVER 52' TO 80"

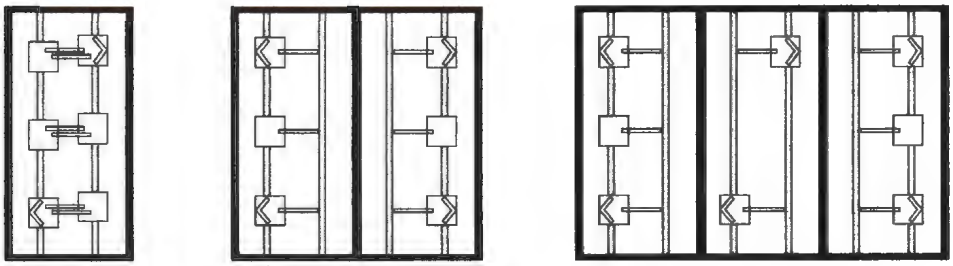

HOMES WITH 5/12 ROOF PITCH REQUIRE: PER FLORIDA REGULATIONS
6 systems for home lengths up to 52' and 8 systems for homes over 52' and up 80'.

PATENT# 6634150 & OTHER PATENT PENDING

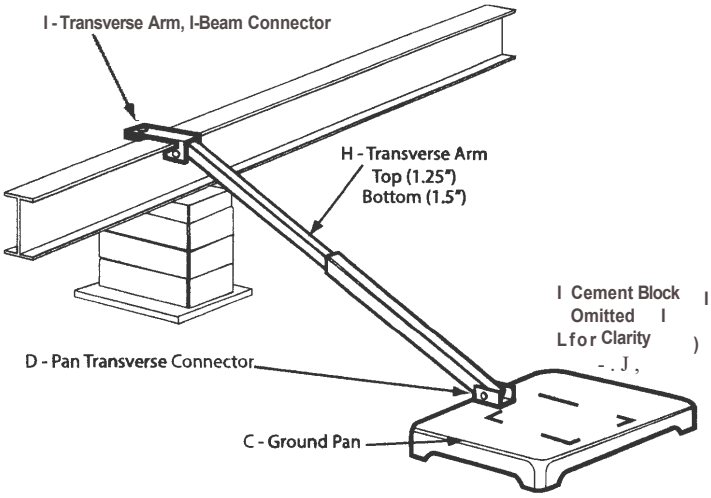

Model # 1101 T "V"

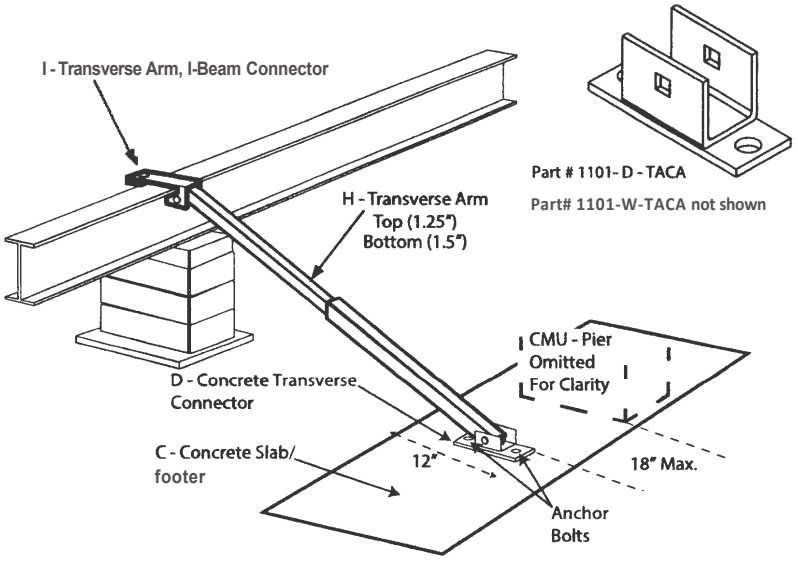

Model # 1101 TC "V"

Florida approved 4' ground anchors may be used in all locations except where home manufacturers specifications for sidewall straps are in excess of 4,000 lbs. These locations require a 5' anchor. Per Florida code.

C = GROUND PAN / CONCRETE FOOTER OR RUNNER

D = GROUND PAN/ CONCRETE U BRACKETS TRANSVERSE CONNECTOR (connects with grade 5 -1/2"x 1 1/2" carriage bolt and nut)

E = TELESCOPING V BRACE TUBE ASSEMBLY (1.5" TUBE BOTTOM AND 1.25" TUBE INSERT) OR 1.5" TUBE

F ="V"BRACE I-BEAM CONNECTOR ASSEMBLY

H = TELESCOPING TRANSVERSE ARM ASSEMBLY

I = TRANSVERSE ARM I-BEAM CONNECTOR (connects with grade 5 - 1/2"x 2 1/2" carriage bolt and nut)

J = V PAN BRACKET (connects with grade 5 - 1/2"x 1 1/2" carriage bolt and nut)

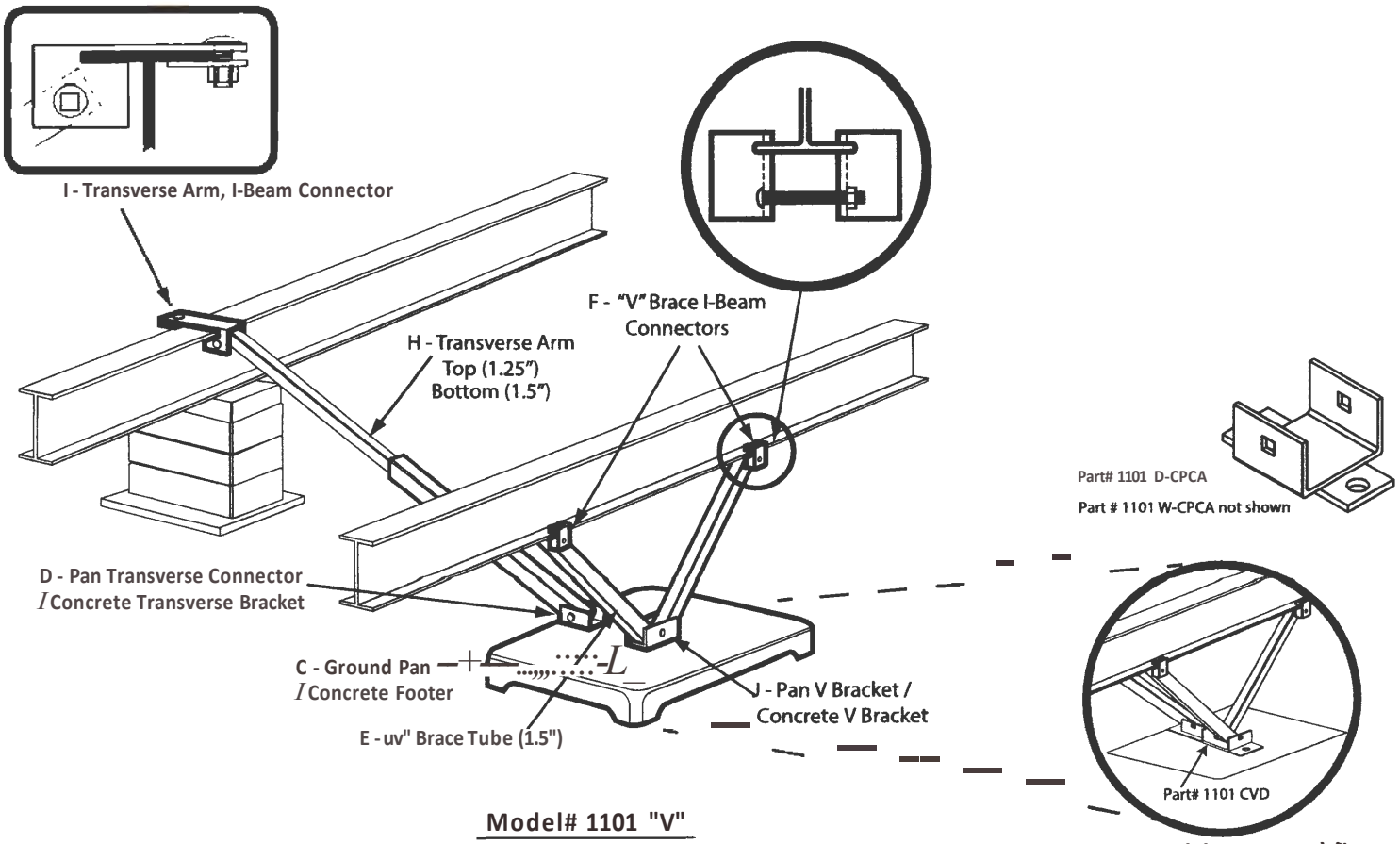

Model# 1101 "V"

Model # 1101 C "V"

PATENT# 6634150 & OTHER PATENT PENDING

Residential Heat Loss and Heat Gain Calculation

8/13/2018

In accordance with ACCA Manual J

Report Prepared By:

For:

Design Conditions: West Pam Beach

Indoor:		**Outdoor:**	
Summer temperature:	70	Summer temperature:	90
Winter temperature:	70	Winter temperature:	42
Relative humidity:	55	Summer grains of moisture:	127
		Daily temperature range:	Medium

Building Component	Sensible Gain (BTUH)	Latent Gain (BTUH)	Total Heat Gain (BTUH)	Total Heat Loss (BTUH)
Duct	711	0	711	719
Floors	1,048	0	1,048	1,864
Walls	1,376	0	1,376	1,632
Ceilings	1,977	0	1,977	1,538
People	1,200	920	2,120	0
Fireplaces	0	0	0	0
Misc	1,200	0	1,200	0
Windows	4,317	0	4,317	1,568
Doors	483	0	483	573
Glassdoors	766	0	766	891
Skylights	0	0	0	0
Infiltration	1,858	3,848	5,706	6,305
Whole House	**14,936**	**4,768**	**19,704 (1.5 tons)**	**15,090**

Load calculations are estimates only, actual loads may vary due to weather and construction differences.

OVERHEAD/UNDERGROUND ELECTRIC SERVICE DIAGRAM

20' POLE

SERVICE AMPERAGE 150 AMPS

Service Wire Type (AL/CU) Aluminum

Service Conductor Size 2/0

Conduit Type PVC

Conduit Size 2"

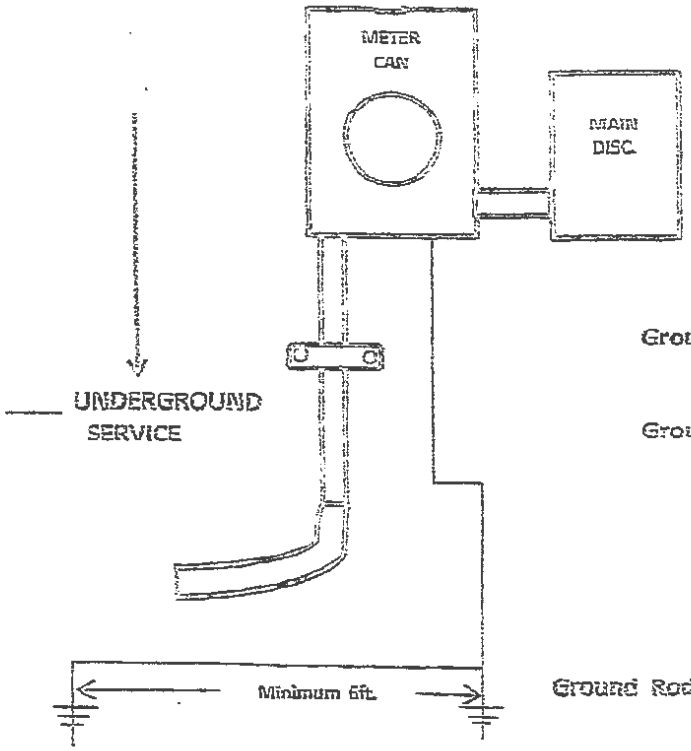

Ground Wire Type # 4 Bare

Ground Conductor Size # 4

Ground Rod Size/Type 5/8 Galvanized

Version: March 21, 2023

BRADENTON TROPICAL PALMS INC.

ARCHITECTURAL REVIEW MANUAL

2023

BRADENTON

BTP

TROPICAL PALMS

TABLE OF CONTENTS

1.0	Architectural Review Committee	3
1.1	Authority	3
1.2	Responsibilities	3
1.3	Limiting Conditions	3
2.0	The Application and Approval Process	4
2.1	Shareholder Application and Approval	4
2.2	Lot Renter Application and Approval	4
2.3	The BTP Office ARC Review	5
2.4	ARC Decisions	5
2.5	Variances	6
2.6	Written Approvals and Oral Statements	6
2.7	Responsibility of Applicant	6
3.0	Mobile Home Improvements (General)	7
3.1	New Structures	7
3.2	Reconstruction of Damaged Structures	8
3.3	Modification of Existing Structures	8
3.3.1	General Provisions	8
3.3.2	Application Submissions	9
3.3.2.1	Major Projects	9
3.3.2.2	Minor Projects	10
3.3.3	Job Site Standards	10
3.4	Temporary Structures	10
4.0	Mobile Home Improvements (Specific)	10
4.1	Accessory Structures – Sheds	10
4.2	Air Conditioning Systems	10
4.3	Finishes, Siding and Exterior Colors	11
4.4	Driveway and Carport	11
4.5	Skirting	11
4.6	Steps	12
4.7	Roofs	12

4.8	Windows	12
4.9	Doors	12
4.10	Mailbox	12
5.0	Mobile Home Accessories	13
5.1	Awnings	13
5.2	Hurricane Shutters	13
5.3	Antenna and Satellite Dish	13
5.4	House Numbers	13
5.5	Exterior Lighting	13
5.6	Pergola, Gazebo	14
5.7	Screen Enclosures and Sun Screens and Shades	14
5.8	Water Softener and/or Conditioning System	14
6.0	Landscaping	14
6.1	Landscaping – General	14
6.1.2	Garden Maintenance	15
6.1.3	Borders	15
6.1.4	Rocks, Stones, Mulch	16
6.2	Planters	16
6.3	Fences	16
6.4	Sidewalks	17
6.5	Pavers	17
6.6	Solar Collectors and Rain Barrels	17
6.7	Seasonal Decorations	18
6.8	Pots and Decorative Items	18

1.0 Architectural Review Committee

1.1 Authority

Where approval or consent of the *Board of Directors* (BoD) is required under these Bylaws or other Cooperative documents, the BoD may, by resolution, delegate its authority to a committee of two or more directors. Each such committee shall keep minutes of each approval procedure. If the committee fails to unanimously approve the requested action, it shall be referred to the BoD at its next regularly scheduled meeting for final determination.

1.2 Responsibilities

a) The *Architectural Review Committee* (ARC) is to be used to review and approve proposed plans for Structures or Accessory Structures within Bradenton Tropical Palms and establish the standards used to evaluate exterior modifications, including landscaping, for completed Structures and/or Accessory Structures. The *Architectural Review Manual* sets forth specific design, environmental and construction site standards and guidelines for lots within Bradenton Tropical Palms. It is organized to assist owners and builders from the preliminary planning phase of a reconstructed structure or modified structure and/or lot through to its completion.

b) Applicant is financially responsible for any and all damage(s) that may be caused to existing infrastructure systems, including but not limited to water/sewer/power/cable, etc. All repairs to such system(s) must be completed to current approved standard(s) and material(s).

c) While individual creativity is encouraged, standards have been established to maintain a measure of aesthetic quality and consistency throughout the neighborhoods. In some cases, there will be no permitted variation from established standards, while in other areas flexibility may be permitted with the review and approval of the Architectural Review Committee. Adherence to the standards contained herein will contribute to the continuation of the inherent attributes of the community which makes it a highly desirable place to live. Owners within Bradenton Tropical Palms (The Park) should familiarize themselves with the guidelines contained herein.

d) Unless otherwise noted, all exterior modifications, improvements, upgrades and/or changes to any lot and/or structure must be submitted to the ARC for review and approval. This excludes *Common Areas*.

e) In some cases, items which the homeowner may consider to be "replacements" are, in fact, "changes." A "replacement" is defined as any new item that is identical to the original item in form, fit, style, color and function. Any new item that does not meet all of the criteria for a "replacement" is then, by definition, a "change".

1.3 Limiting Conditions

Where approval or consent of the *Board of Directors* (BoD) is required under these Bylaws or other Cooperative documents, the BoD may, by resolution, delegate its authority to a committee of two or more directors. Each such committee shall keep minutes of each approval

procedure. If the committee fails to unanimously approve the requested action, it shall be referred to the BoD at its next regularly scheduled meeting for final determination.

The following limiting conditions shall apply to activities of the Architectural Review Committee (ARC):

a) The standards contained herein set forth minimum requirements.
b) In the event building codes and/or other provisions of law require greater restrictions than are imposed by the Architectural Review Committee, the more stringent provisions shall control. It is, however, the responsibility of the applicant to ensure that all permits are applied for and approved prior to undertaking any work.
c) Approval of applications and/or design documents by the ARC shall not be construed as meeting the requirements of City of Bradenton and/or any other governmental and/or quasi-governmental authority with jurisdiction over the community and/or proposed improvements.
d) Approval of applications and/or design documents by the ARC shall not impose any responsibility on the ARC for the design, engineering and/or construction of Structures or Accessory Structure. ***The scope of any review and approval by the ARC shall be limited solely to whether the plans meet certain requirements and/or standards relating to aesthetics, and the harmony and compatibility of the proposed improvements on Applicant's Lot with other improvements to be constructed within Bradenton Tropical Palms.***
e) The Standards herein are subject to change by the ARC without prior notice. Applicants should contact the ARC to ascertain what changes, if any, may affect proposed plans for reconstruction and/or modifications to completed Structures prior to undertaking preliminary or final designs.
f) The ARC shall not be liable for mistakes and may require an Applicant to correct deficiencies arising as a result of any ARC approval.

2.0 The Application and Approval Process

2.1 Shareholder Application and Approval

The following are Shareholder guidelines for the application and approval process with respect to the submission of an application for the reconstruction and/or modification to an existing Structure and/or Accessory Structure. The ARC shall approve or disapprove any properly completed application from a Shareholder, submitted to it, and/or request additional information it may require, within 10 working days after receipt. ***NOTE: Appropriate Permits must be obtained from the City.***

2.2 Lot Renter Application and Approval

A Lot Renter must follow the steps/guidelines below before undertaking any modifications or reconstruction to an existing Structure and/or Accessory Structure:

Step 1: Prepare the ARC request as defined under major or minor project.

Step 2: The lot renter must then obtain in writing from the city of Bradenton whether permits are required or not.
Step 3: The ARC will review the project and determine if it meets all requirements of the ARC.
Step 4: After the lot renter has received approval from ARC, he/she must obtain permit(s) from city, if required, and submit to ARC for final approval. The ARC will make the final approval within 10 days of receipt of the permits.
Step 5: After the work has been completed, the lot renter must call the City of Bradenton to inspect the work that has been done and close the permit.
Step 6: After the work has been completed, the lot renter must provide a copy of the closed permit to the office so that the ARC Committee can check the work to ensure that it matches the original approval.

2.3 The BTP Office ARC Review

a) The BTP Office will review Architectural Review Applications for completeness prior to acceptance and give the resident a copy of the form.
b) The BTP Office will automatically deny any incomplete applications if it does not include the following and will ask the resident to re-submit the application when it is complete:
    1) Lot diagram: to show where shed, garden border, new pavers, or driveway extension will be located.
    2) Dimensions of improvement: actual size of shed, patio size, fences height and length, etc.
    3) Colors: There are charts at the office for unit colors, trim colors, and driveway colors. If a color change is requested and the color is not on the color chart, a color chip must accompany the request form and be at least 1" x 1" in size.
    4) Any other requirement of the ARC Committee requested prior to approval.
c) If the BTP Office deems the ARC request form is complete, the form will be put in the ARC Committee mailbox for action by the committee.
d) Once the ARC Committee approves, denies, or asks the resident for more information in order to make a final decision, the BTP Office will be given the application that includes the committee's written decision.
e) The BTP Office will contact the resident to give him/her this information.
f) The BTP resident should be given a copy of the application with the ARC Committee decision via a paper copy or via an attachment to an email message.
g) The completed ARC form that is approved or denied by the ARC Committee will be put into the resident file for future reference.

2.4 ARC Decisions

a) Upon receipt of a properly completed application, along with any required design documents, the ARC will review all applications weekly. At its designated scheduled meeting time and place, the ARC will publicly review the application and render one of three (3) decisions to be recorded in the meeting minutes:
    a. Approved as submitted
    b. Disapproved
    c. Approved with stipulations.

b) If an application is APPROVED WITH STIPULATIONS, the Applicant must make changes prior to beginning any work. However, the resubmittal of applications and/or design documents is not required. STIPULATIONS are binding upon an Applicant.
c) In the event an application is DISAPPROVED at time of submission, the Applicant must make appropriate changes and re-submit an application with revised design documents. In some cases, an application may be DISAPPROVED because it inadequately describes the Applicant's request or because it is in conflict with the standards of the ARC. If an application has been DISAPPROVED, the decision may be appealed to the Board of Directors within 30 days of the ARC's decision.
d) The approval of applications and/or design documents for new construction or modifications on a certain Lot shall not obligate the ARC to make similar approval on other Lots with similar applications and/or design documents.
e) The ARC is not obligated to review incomplete applications and/or design documents that do not conform to the requirements set forth by the ARC
f) The time period for rendering decisions by the ARC for any step in the Architectural Review process shall not commence until receipt of completed applications and/or design documents

2.5 Variances

The ARC may authorize a variance from compliance with any of its standards and procedures when circumstances such as topography, natural obstructions, hardship, and/or aesthetic and/or environmental considerations require. Such variances may only be granted, however, when unique circumstances dictate, and no variance shall:

1) be effective unless in writing
2) be contrary to the restrictions set forth in the body of the Governing Documents
3) prevent the ARC from denying a variance in other circumstances. The inability to obtain any permit and/or any financing shall not necessarily be considered a hardship warranting a variance.

2.6 Written Approvals and Oral Statements

Applications and design documents on file with the ARC and letters of approval as may be issued by the ARC shall be the sole source of reference regarding ARC approval. Oral statements may not be relied upon. There is no implied consent if the Owner does not hear from the ARC. The Owner has the responsibility to follow up with the ARC.

2.7 Responsibility of Applicant

The ARC assumes no liability for any aspect of reconstruction and/or modifications to completed Structures or Accessory Structures, including, without limitation, the following obligations which are the sole responsibility of the Applicant:

1) Selection of licensed and insured building and trade contractors.
2) Quality of workmanship and/or materials provided by any building and/or trade contractor.

3) Compliance with ordinances, American Disability Act (ADA) provisions, environmental regulations, building codes, safety requirements, and/or product approvals.
4) Suitability of surface and/or subsurface soil conditions.
5) Water runoff and/or drainage control during construction or after completion of improvements.
6) Accuracy of elevation grades, stakeouts, surveys and/or lot grading plans.
7) Permits and/or approvals, as may be required by any government and/or quasi-governmental authority.
8) Completeness or adequacy of application and/or design documents submitted by an Applicant as well as notification to the office when the work has been completed so the ARC Committee can check the work to ensure that it matches the original approval.
9) Determination of structural, mechanical, electrical and/or fire/safety adequacy as well as code compliance and/or other technical aspects of proposed designs and construction materials/methods, which are the sole responsibility of Applicants and/or architects, engineers and contractors on behalf of Applicants
    1) Compliance with the Architectural Review Manual, the Declaration and/or any other covenants, restrictions and easements burdening a Lot or the Property. (Property lines can be determined by the Manatee County Property Appraiser) http://www.manateepao.gov

3.0 Mobile Home Improvements (General)

3.1 New Structures

All mobile homes brought in the park must first be approved in writing by the Board of Directors. Plans for new mobile homes with all accessory structures must be approved by the ARC Committee prior to installation. Plans must be submitted as a major project.

All homes brought into the park must meet the following minimum standards

1. All homes must comply with standards established by the U.S. Department of Housing and Urban Development (HUD), City, State and all other governmental agencies under which the manufacturing and installation of mobile homes and accessory structures apply.
2. A Florida-licensed mobile home installation contractor must install and tie-down the home
3. May not be more than five (5) years old
4. Must be professionally installed by a licensed mobile home installer
5. Must be at least 12 feet wide by 36 feet long
6. Patio and carport awnings specified on the accepted site plan must be installed within sixty (60) days of installation of the Home. See Driveway and Carport.
7. Grass must be installed upon completion
8. Green Space Requirement. Bradenton Tropical Palms is within R-4, zoning, where the maximum allowed impervious surface is 70%. The lots are considered existing nonconforming if they are 2000 square feet, as the minimum lot size in R-4 is 3,000 sf, but

the standards still apply to the smaller lots. Only an approved permit from the City of Bradenton can supersede this requirement.

3.2 Reconstruction of Damaged Structures

In the event of damage to an existing Structure, owners are required to submit an application accompanied by design documents describing in detail the reconstruction elements to be undertaken to rehabilitate the Structure and return it to "before damaged" condition. All elements and processes of the reconstruction project must conform to all requirements of the ARC, and be approved by the ARC before any construction is undertaken. Design documents required for reconstruction will depend on the extent of the project, and are reviewed at the end of this section.

3.3 Modification of Existing Structures

Any changes, permanent or temporary, to the exterior appearance of a residence and/or lot are subject to review and approval by the ARC. The review process is not limited to major modifications or alterations, such as adding a lanai, porch or patio. It includes such minor items as changes in doors, screens and windows and landscaping. Approval is also required when an existing element is requested to be removed.

3.3.1 General Provisions

The following general provisions apply to all applications for modifications and/or reconstruction:

a) Modifications and/or reconstruction must be approved by the ARC prior to the commencement of work. In addition to other available remedies, the ARC may recommend to the Board of Directors that work cease in the event such work is commenced without approval.

b) In the event work is performed without an approved application, the Board of Directors may require, at the expense of the Applicant, the following:

   1) The timely removal of such modifications/reconstruction and the restoration of existing elements and/or

   2) The timely completion of remedial work to bring such modifications/reconstruction into compliance with the Architectural Review Manual.

c) At the option of the ARC, comments on proposed modifications/reconstruction may be solicited from other owners. The ARC may, but is not obligated to, take into consideration the comments of others before rendering a decision on an application.

d) All modifications/reconstruction must be completed within the time limit stated on the application. Unless an extension of time is approved by the ARC, all work must be completed within 90 days maximum of the date of application approval. Extensions must be approved by the ARC.

e) Applicants shall ensure that all building and/or trade contractors comply with Construction Site Standards

f) Upon the completion of modifications/reconstruction, the ARC may conduct [but shall not be obligated to conduct] a final inspection to determine if all requested and approved elements, including landscaping, have been completed in accordance with the approved application and/or related design documents. Applicants are obligated to take remedial action as may be required by the ARC to complete or correct elements that are not in compliance with the approved application and/or related design documents. If deviations are noted, the ARC will notify the Owner and the Board of Directors

3.3.2 Application Submissions

3.3.2.1 Major Projects

All plans and data required for approval shall be of sufficient detail and clarity to accurately portray the proposed project. No existing design or element of a design will be considered as precedent for any future repetition by the same or another owner. As a minimum, each plan required for the appropriate step in the review process must convey the information outlined below.

a) The owner's name must be shown on all plan sheets.
b) The street address and lot number must be shown on all site plans.
c) A drawing with existing and proposed outline of the structure
    2) Setback dimensions from property line (Property lines can be determined by the Manatee County Property Appraiser) http://www.manateepao.gov
    3) Walkways
    4) Driveways (for licensed vehicle parking)
    5) Roof Plan
    6) Decks
    7) Patios (not for licensed vehicle parking)
    8) Air conditioning units
    9) Sheds
    10) Fences
    11) Garage
    12) Lanais, Screen Rooms, Sun Rooms, Florida Rooms, etc.
    13) Water and sewage hookups
    14) Outlines of adjacent structures and setbacks from said structures
    15) Proposed drainage patterns
    16) Etc.
d) Exterior Details
    1) All exterior elements of design
        i. Proposed lighting
        ii. Materials and colors (samples required). Colors must be arranged as to depict the proposed color scheme
        iii. Landscape Plan

3.3.2.2 Minor Projects

a) Exterior Details
   1) Materials and colors (samples required). Colors must be arranged as to depict the proposed color scheme
   2) Landscape Plan – see landscaping below

3.3.3 Job Site Standards

a) Portable on Demand Storage (PODS), trailers, dumpsters require a BTP permit and must be removed after 30 total days onsite. Portable storage or dumpsters must be placed on owner property and not common areas.
b) All tools and equipment shall be neatly stored on the driveway at the end of the work day if not put inside the unit.
c) Trash and construction debris must be removed from the unit daily or stored in Portable Storage or placed in a dumpster.

3.4 Temporary Structures

Temporary structures are not allowed with the exception of trailers and dumpsters, etc. used during construction and clothes drying lines (see Laundry in the BTP Rules and Regulations)

4.0 Mobile Home Improvements (Specific)

4.1 Accessory Structures – Sheds

Other than the shed which is approved as part of the original construction, additional sheds/outbuildings MAY be allowed as follows:

1) Shed/Outbuilding will only be allowed if there is sufficient room upon the lot as determined by the ARC.
2) Plans as notated under major projects must be submitted with application
3) The placement of a shed/outbuilding will be determined by the ARC with consideration to interference with neighbor's use of property and ability of landscapers to access the property. The ARC may determine that stone or pavers must be installed if there is limited room to maneuver between structures.
4) A free-standing shed/outbuilding may only be installed if there is sufficient room on the lot to do so as determined by the ARC.
5) Extensions of existing sheds to meet the existing mobile home (i.e., The breezeway is enclosed) must be finished with the same materials and colors as exist on the mobile home
6) The shed should be located in the back or near the back of the unit.

4.2 Air Conditioning Systems

a) New construction requires the installation of a central air conditioning system
b) Air conditioners can be extremely noisy and may interfere with the enjoyment of other adjacent mobile home owners. Criteria for placement of central air conditioning units will include location of windows, doors and driveways of surrounding buildings. Plans must be submitted as notated in major projects

c) Window air conditioning units are grandfathered on existing mobile homes.
d) Window and wall units will be properly supported with supports designed for such
e) No temporary supports will be allowed (no 2x4's stuck in the ground to prop up unit)
f) Criteria for placement of new air conditioning units, other than replacement of existing air conditioning units must be submitted as notated in major projects.

4.3 Finishes, Siding and Exterior Colors

a) Due to the nature of termites, all new construction must be sided with aluminum, vinyl siding or fiber cement board.
b) Colors schemes must be approved by the ARC. Approved colors are available for viewing in the office.
c) If the unit is being refreshed with the existing paint color, an architectural request is not required.
d) The colors for each unit should be limited to:
    - **2(two) colors plus white only if a third color is desired**. The **main color** which would be the exterior walls of the mobile can be white or one of the 2 lightest shades (some exceptions may apply) of the chosen color from samples available at the front office.
    - The **second color, if used for doors, shutters and the trim, can be a compatible light or deeper shade of main color or a contrasting color (Trim can be no wider than six inches)**

4.4 Driveway and Carport

a) Plans as notated in major projects must be submitted prior to installation of driveway or carport and be in compliance with the 30% Green Space requirement.
b) New driveways installed under the carport (must be of concrete} and accessory parking spaces must be of concrete (or pavers and be designated as vehicle parking space and will require a city permit with no encroachment on neighbours' property with no exceptions.
c) Carports uprights must be silver or white aluminum.
d) Carport roofs may be aluminum or match the existing material of the roof.
e) Driveways may be painted- approved colors are available in the office.
    1) Any colors or materials other than the approved paint colors and concrete must be approved by the ARC. Painted driveways must be maintained by regularly cleaning and painting.

4.5 Skirting

a) Skirting may be constructed of siding or blocks that must be approved by the ARC prior to installation.
b) Skirting must be installed within thirty (30) days of installation.
c) Patio blocks or cement barrier of at least one (1) foot must be installed between the mobile home skirting and the lawn.

4.6 Steps

a) Porch steps must be constructed of aluminum, concrete, fiberglass and composite decking. However, pressure treated wood can be used for framing only.

4.7 Roofs

a) New Roofs and/or major roof repairs must be approved by the ARC.
b) All mobile home roofs must be of one material and one color.
c) Only the carport may be made from a different material than the mobile home roof.
d) Shed/Outbuilding roofs must be approved by the ARC.
e) The following Roof Materials are allowed:
    1) Shingle
    2) Metal
    3) Membrane
    4) All shingle colors must be approved by the ARC and must compliment the exterior color of the mobile home.

4.8 Windows

1. All shareholders and lot renters must obtain ARC approval for:
    a. Replacement of a window of the same size as the existing window
    b. If a new window opening is being installed
    c. The window opening is being made larger
    d. The window opening is being replaced with a door
    e. The window opening is being covered up with siding - siding must match the material and color of the existing siding

3 Existing windows cannot be replaced with any other materials except white vinyl-clad or aluminum windows.

4.9 Doors

All shareholders and lot renters must obtain ARC approval for:

a. The replacement door is the same size as the existing door
b. If a new door opening is being installed
c. The door opening is being made larger
d. The door opening is being covered up with siding - siding must match the material and color of the existing siding.

4.10 Mailbox

a) Each mobile home must have one mailbox that is attached to the mobile home. Free standing mailboxes set into the ground are not allowed.
b) Black mailboxes are approved, other colors and styles must be approved by the ARC
c) Mailboxes must be kept in like new condition

5.0 Mobile Home Accessories

5.1 Awnings

a) Fabric
   1) Must be made of a material designed for outdoor use with a minimum seven (7) year color fade guarantee.
   2) Color must be complementary to the existing color palette of mobile home and must be approved prior to installation as a minor project.

b) Metal
   1) Must be specifically manufactured for mobile home use.
   2) Must be able to close and lock.
   3) Must be painted to match the existing color palette of the mobile home.

5.2 Hurricane Shutters

a) Permanent hurricane shutters must adhere to the local building code and must be approved by the ARC as a minor project.

b) Permanent hurricane shutters must be of a type manufactured for such a purpose. Approved colors are clear, white or match the existing paint color of the exterior of the home.

c) Temporary hurricane barriers such as plywood cannot be installed until a storm is named and considered likely to make landfall in Florida within three (3) days and must be removed within ten (10) days of the said named storm is no longer a threat.

5.3 Antenna and Satellite Dish

a) Cannot be placed at the front of the mobile home.

b) Placement must be approved by the ARC.

c) Cannot exceed 2 feet above the peak of the roof.

d) Old equipment shall be removed before new equipment is installed.

5.4 House Numbers

a) All units must have house numbers.

b) All house numbers must be visible and not obscured by landscape, etc.

c) All house numbers will be kept in like new condition.

d) All numbers must be at least 3 inches.

e) Numbers may be black, gold or silver.

f) Decorative number plaques must be approved by the ARC.

5.5 Exterior Lighting

a) Each unit must be equipped with one exterior light.

b) Lights must have a shade.

c) Shade must be kept in good condition.

d) Glass must be replaced if broken.

e) Fixture must be securely attached to the wall or ceiling.

f) Any faded parts must be painted and maintained like new.

g) Bulbs must be white.
h) Lights must be installed in a manner so that they do not shine directly into the windows of neighboring units.

5.6 Pergola, Gazebo

Approval of a Pergola or Gazebo is contingent upon lot space. Submit plan as described in Major Projects. Most lots will not accommodate a gazebo or pergola.

5.7 Screen Enclosures and Sun Screens and Shades

a) Screen enclosures and sunrooms must be approved prior to installation and require an application as noted in Major Projects.
b) Only black screens are allowed.
c) Uprights, kick plates and doors must match the existing unit.
d) Plastic windows are not allowed on new structures.
    a. Existing plastic windows must be kept in good condition without cracking or rips.
    b. Existing plastic windows must be repaired with the same material and color as exists on other plastic windows.
e) Sun shades may be installed as follows
    1) Must be of a material made for outdoor use.
    2) Must be kept in like new condition - no fading, rips or tears.
    3) Must be installed on a track.
    4) May be of a pull-down blind style or:
    5) May be of a curtain style.
    6) Colors must be complementary to the mobile home.
    7) Must be secured so as to be able to be tied back in case of high winds.
    8) Must be removed when resident is not in the park for an extended period of time.
    9) No kite style shades are allowed.

5.8 Water Softener and/or Conditioning System

a) Requires Major Project Application.
b) Water softeners must be fully enclosed within a shed or enclosure built for such purpose.

6.0 Landscaping

6.1 Landscaping – General

a) Unit Owners shall be responsible for the landscaping, trees, plants and shrubs on the unit and shall be liable for any damage caused thereby. However, to the extent that the assessment includes landscaping service, Unit Owners shall be relieved of such obligation as follows:
    1) The Park mows, blows and provides limited edging of grassed areas. The Board of Directors reserves the right to change or cancel any landscaping services.
    2) Mowing days may vary by season. Lawns are generally mowed twice a month in the winter and every week during the growing season.

b) ARC requirements for soft landscaping (plants, trees and shrubs), must be approved by the ARC.

1) The ARC request must include the following:

i. A diagram of the distance between the canopy width, the unit and any other unit that adjoins the lot where the tree or shrub is to be planted.

ii. If applicable, a diagram of the garden bed that is to be installed as per preceding instructions.

iii. The request must state the name of Tree or Shrubs (include pictures).

iv. The location in which it will be planted, and

v. The width and height of the plant when it reaches maturity.

vi. IF YOUR LANDSCAPE PLANS EXTEND BEYOND THE BOUNDARY OF YOUR UNIT (HALF WAY) PLEASE ADD WRITTEN APPROVAL FROM YOUR NEIGHBOR, PRIOR TO SUBMITTING YOUR APPLICATION, AS DESCRIBED BELOW.

6.1.2 Garden Maintenance

a) All gardens must be mulched yearly.

b) All gardens are to be maintained year-round.

c) The following restrictions for plant materials:

- Norfolk Pines are not allowed to be planted except in pots.
- Invasive vines, Invasive trees such as Brazilian pepper trees.
- Ear Pod Tree or any tree whose canopy will, when at mature height, cover the roof or rub up against a neighboring mobile home.
- Any tree that will exceed 15 feet at maturity (any tree that you cannot maintain while standing on the ground at full maturity)
- No new installations of fruit trees of any kind will be approved as of June 15,2021.
- The owners of the properties where fruit trees currently exist are responsible for:
  a) The maintenance & trimming of the tree(s).
  b) Removal of fallen fruit on a regular basis as required
  c) Purchase and installation of a fruit tree rodent guard (Available at hardware stores)
- Properly identified fruit trees in common areas of BTP will be removed by the park.

d) The Park is only responsible for maintaining the Palm trees that border the road. All other trees are owned and maintained by the unit owner. If you purchase a unit on which trees (other than the Park owned Palms) or other landscaping has been planted, you are responsible to maintain it.

6.1.3 Borders

a) Borders come in a variety of styles and colors and must be approved by the ARC prior to installation.

b) Borders must be properly installed with cement or rods as required by the manufacturer to ensure that a stable border is formed that cannot be easily toppled over or misaligned by mowers and weed eaters.

c) A diagram of the distance between the garden borders and the unit and any other unit that adjoins the lot where the garden border will be installed.
d) A picture of the border which will indicate the color and configuration of the installation.
e) Soft landscaping must be identified as directed above if this is a new installation
f) All gardens must be maintained year-round which includes mulching, weeding and trimming. No dead plants are to be left in the ground.
g) Borders are subject to dirt and mold and must be cleaned as needed and at least once a year.

6.1.4 Rocks, Stones, Mulch

a) The only approved ground cover is grass. If you wish to remove the grass and install rocks, stones or mulch instead; you must obtain ARC approval. All stone/rock or mulched lawns must be surrounded by a border to control spillage of the medium onto the road or a neighboring lot.
b) Only the following may be installed, with ARC approval:
    1. Brown and/or Tan River rock between 1 and 2 inches in size.
    2. White Pebble between 1 and 2 inches is allowed
    3. Crushed lava rock between 1 and 2 inches
    4. White Marble Nuggets between 1 and 2 inches is allowed
    5. Pine Bark Mulch or rubber mulch
    6. Pea gravel size is not allowed.
    7. Crushed shell or shell of any type is not allowed
    8. Gravel is not allowed
    9. No shaved or colored mulch (this may be used in garden beds only)
    10. Weeds are persistent in the summer and weeds must be controlled all year round.
c) Green Space Requirement - Tropical Palms is within R-4, zoning, where the maximum allowed impervious surface is 70%. The lots are considered existing nonconforming if they are 2000 square feet, as the minimum lot size in R-4 is 3,000 sf, but the standards still apply to the smaller lots. Only an approved permit from the City of Bradenton can supersede this requirement.

6.2 Planters

Older mobile homes have a planter covering the tongue of the trailer. The following are approved planter fill:

a) Flowers or shrubs that are kept weed free and trimmed.
b) White rock which must be maintained weed free, rubber mulch, river rock.
c) All other fills are unacceptable unless approved by the ARC.
d) For further information, see landscaping.

6.3 Fences

a) All applications for fences must include detail as required in Major Projects.
b) Fences may be denied because mowers or weed eaters will lose access to certain areas.

c) Any fences that are approved and lawn areas are no longer accessible, the unit owner is then responsible for maintaining the grass within that area.
d) Chain link fences are not allowed under any circumstances.
e) All fences must be constructed of white PVC.
f) All posts must be capped. The style of cap must be included in the original application.
g) Decorative lattice must be square PVC with 1" thick slats.
h) All fences must have vertical slats.
i) Fences panels must not be taller than 6 (six) feet from the ground including any decorative lattice.
j) Fence posts must be set in concrete with the top of the concrete extending one half ½ a foot around each post so that mowers and weed trimmers will be less likely to damage the fence. Fences posts including post lights must not be taller than six inches above panels.
k) Fences must not extend past the end of the mobile home.
l) Fences must be kept clean and free of mold and algae.
m) Fences must be kept in like new condition.

6.4 Sidewalks

a) ARC application must follow major projects guidelines.
b) Sidewalks may be made of poured concrete, patio stones or pavers.
c) Sidewalks like driveways must be kept free of crack weeds and
d) Need to be cleaned at least once a year to remove dirt, mold and mildew.

6.5 Pavers

a) Pavers are considered an impervious surface (water does not flow through to the ground below). Consequently, pavers are not considered to be part of the 30% green space required around a mobile home. As of February 2022, the ARC Committee are following the City of Bradenton zoning requirement of 30% green space.
b) Green Space Requirement – Bradenton Tropical Palms is within R-4, zoning, where the maximum allowed impervious surface is 70%. The lots are considered existing nonconforming if they are 2000 square feet, as the minimum lot size in R-4 is 3,000 sf, but the standards still apply to the smaller lots. Only an approved permit from the City of Bradenton can supersede this requirement.
c) It is prohibited to park licensed vehicles on pavers at any time.

6.6 Solar Collectors and Rain Barrels

Applications for all solar collectors, except rain barrels, will require a Major Project Application

a) Rain Barrels
    1) The only rain barrels allowed are those for sale through Manatee County's Rain Barrel Program.
    2) Requires Minor Project Application.
    3) The rain barrel must be installed on a cement base or patio stones.
    4) There must be at least six (6) inches of cement or patio stones around the exterior edge of the rain barrel.

5) The rain barrel must be fully functional and kept clean at all times.
6) No weeds will be allowed to grow through cracks.
7) Unit owner must edge around the concrete.

6.7 Seasonal Decorations

a) Seasonal decorations shall not be installed any earlier than one (1) month before and must be removed no later than fifteen (15) days after the date of the holiday.
b) Musical decorations or decorations that make noise must have the sound turned off when the approved resident is not in the residence and must be turned off by ten (10 p.m.) and not turned on before 10 a.m.
c) Bright lights will not be permitted if they disturb a neighbor.
d) Lighting should be placed in a manner as not to shine into neighboring windows.
e) Lights are to be turned off at midnight.
f) No decorations which create a safety hazard will be permitted.
g) Certain string lighting is considered decorative and not seasonal such as rope lighting and decorative patio lights. These lights will be allowed to remain up all year except that they are not allowed to frame the mobile home and windows in the same manner as seasonal lighting would be attached. Non seasonal decorative lighting may be placed inside and on the open side of a carport. Red, white and green Icicle lights are ALWAYS considered seasonal.
h) Extension cords placed on the lawn must be removed on lawn mowing day, unless you have a mulch lawn that does not get mowed.
i) Christmas trees must be disposed of as required by the trash hauler.
j) See "Decorative Flags" under Flags in the Rule Book.

6.8 Pots and Decorative Items

Appreciation of Art is a subjective choice. This is usually taken to mean that it is a matter of personal taste. It is recognized that one person's choice may or may not be that of another. However, if written concerns regarding such art are submitted to the ARC, the art in question will be reviewed by the ARC. If the majority written opinion of the ARC is that such art is inappropriate for display in the park (BTP), then such art must be removed from public display.

a) Recommended Pots are those made of concrete, /faux concrete, or clay/faux clay (glazed or unglazed).
b) No pots are to be placed on the cutting area of the lawn.
c) No artificial flowers, trees or plants, etc. are allowed in these flower pots or in any other exterior gardens unless they are kept in good condition and not faded due to weather conditions.
d) Solar lights must be placed along garden borders and walkways in a manner that will not interfere with the lawn mowers and weed eaters.
e) The Association, Management Company or lawn service vendor shall not be responsible for any damage to the solar lights that may result from maintenance activities.

f) Decorative plaques or other decorative items attached to a unit and/or yard art including but not limited to sculptures, statues and other freestanding or attached works, are limited to no more than 36 inches in height or 36 inches in width.

AHRI CERTIFIED®
www.ahridirectory.org

Certificate of Product Ratings

AHRI Certified Reference Number : 9561666 Date : 10-31-2018 Model Status : Active

AHRI Type : RCU-A-CB

Series : 14 SEER N SERIES R410A AC

Outdoor Unit Brand Name : TEMPSTAR

Outdoor Unit Model Number (Condenser or Single Package) : NXA436(A,G)KC**

Indoor Unit Model Number (Evaporator and/or Air Handler) : FEM4P36**AL

Region : Southeast and North (AL, AR, DC, DE, FL, GA, HI, KY, LA, MD, MS, NC, OK, SC, TN, TX, VA, AK, CO, CT, ID, IL, IA, IN, KS, MA, ME, MI, MN, MO, MT, ND, NE, NH, NJ, NY, OH, OR, PA, RI, SD, UT, VT, WA, WV, WI, WY, U.S. Territories)

Region Note : Central air conditioners manufactured prior to January 1, 2015 are eligible to be installed in all regions until June 30, 2016. Beginning July 1, 2016 central air conditioners can only be installed in region(s) for which they meet the regional efficiency requirement.

The manufacturer of this TEMPSTAR product is responsible for the rating of this system combination.

Rated as follows in accordance with the latest edition of ANSI/AHRI 210/240 with Addenda 1 and 2, Performance Rating of Unitary Air-Conditioning & Air-Source Heat Pump Equipment and subject to rating accuracy by AHRI-sponsored, independent, third party testing:

Cooling Capacity (A2) - Single or High Stage (95F), btuh : 33000

SEER : 14.00

EER (A2) - Single or High Stage (95F) : 12.00

†"Active" Model Status are those that an AHRI Certification Program Participant is currently producing AND selling or offering for sale; OR new models that are being marketed but are not yet being produced."Production Stopped" Model Status are those that an AHRI Certification Program Participant is no longer producing BUT is still selling or offering for sale.
Ratings that are accompanied by WAS indicate an involuntary re-rate. The new published rating is shown along with the previous (i.e. WAS) rating.

DISCLAIMER
AHRI does not endorse the product(s) listed on this Certificate and makes no representations, warranties or guarantees as to, and assumes no responsibility for, the product(s) listed on this Certificate. AHRI expressly disclaims all liability for damages of any kind arising out of the use or performance of the product(s), or the unauthorized alteration of data listed on this Certificate. Certified ratings are valid only for models and configurations listed in the directory at www.ahridirectory.org.

TERMS AND CONDITIONS
This Certificate and its contents are proprietary products of AHRI. This Certificate shall only be used for individual, personal and confidential reference purposes. The contents of this Certificate may not, in whole or in part, be reproduced; copied; disseminated; entered into a computer database; or otherwise utilized, in any form or manner or by any means, except for the user's individual, personal and confidential reference.

AHRI
AIR CONDITIONING, HEATING, & REFRIGERATION INSTITUTE
we make life better™

CERTIFICATE VERIFICATION
The information for the model cited on this certificate can be verified at www.ahridirectory.org, click on "Verify Certificate" link and enter the AHRI Certified Reference Number and the date on which the certificate was issued, which is listed above, and the Certificate No., which is listed at bottom right.

©2018 Air-Conditioning, Heating, and Refrigeration Institute

CERTIFICATE NO.: 131854871719599106

MIAMI TECH, INC.

MECHANICAL UNIT STEEL TIE-DOWN CLIP: AT GRADE & ROOF-TOP MOUNTED APPLICATIONS

NON-SITE-SPECIFIC STRUCTURAL PERFORMANCE EVALUATION. A DESIGN PROFESSIONAL SHALL BE RESPONSIBLE FOR CERTIFYING THE APPLICATION OF THIS INFORMATION TO ANY SITE-SPECIFIC LOCATION.

FRANK BENNARDO, PE
PE# 0046549 CA# 9885

FRANK L. BENNARDO LICENSE No 0046549 STATE OF FLORIDA PROFESSIONAL ENGINEER

Digitally signed by Frank Bennardo
Date: 2023.08.21 10:44:34 -04'00'

FL19731.2

STEEL TIE-DOWN CLIP

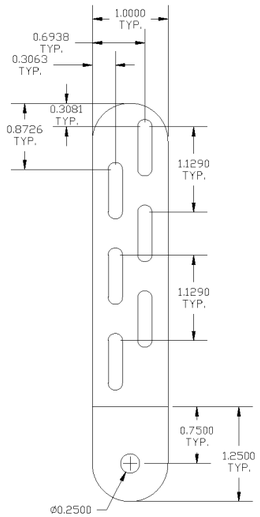

1/1 4" LONG CLIP
N.T.S. FLATTENED

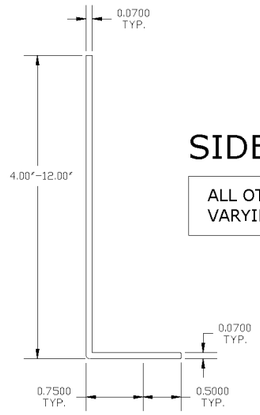

SIDE VIEW TYP.

ALL OTHER CLIPS SIMILAR VARYING LENGTH ONLY

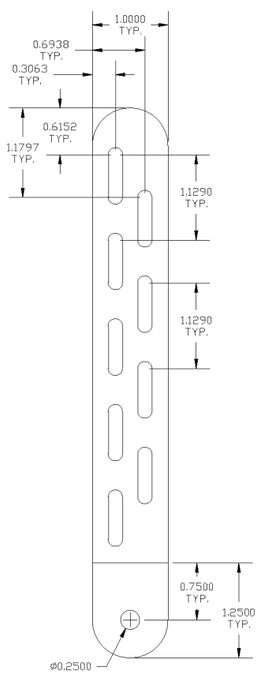

2/1 6" LONG CLIP
N.T.S. FLATTENED

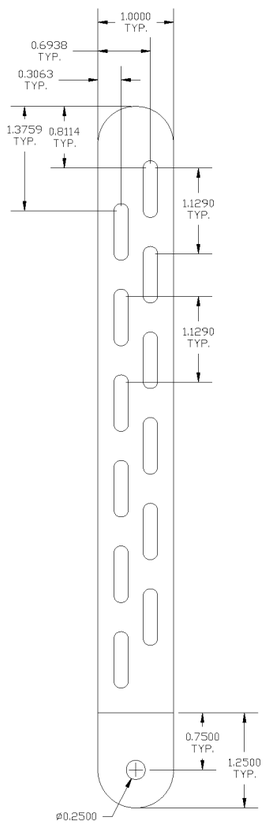

3/1 8" LONG CLIP
N.T.S. FLATTENED

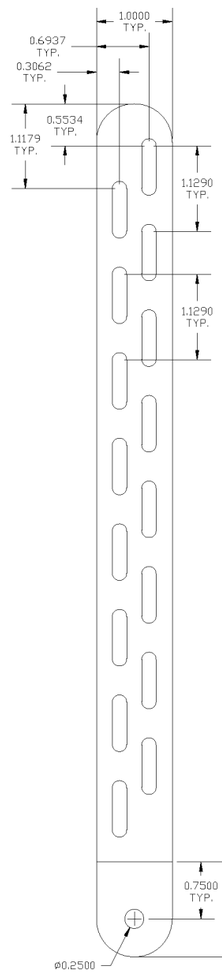

4/1 10" LONG CLIP
N.T.S. FLATTENED

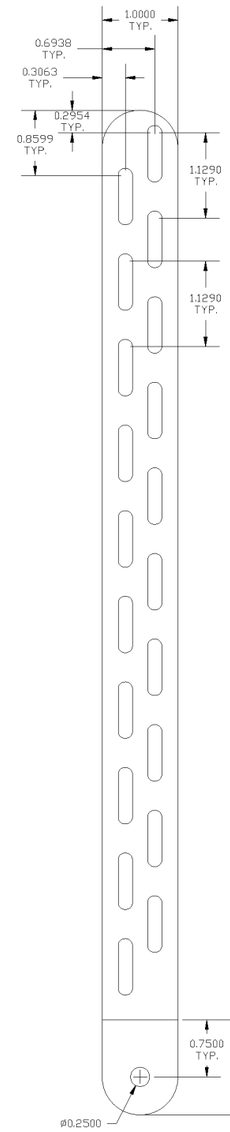

5/1 12" LONG CLIP
N.T.S. FLATTENED

NOTE REGARDING USE OF THIS DOCUMENT & USE OUTSIDE FLORIDA:

NON-SITE-SPECIFIC STRUCTURAL PERFORMANCE EVALUATION. THIS PRODUCT EVALUATION IS VALID FOR USE IN **FLORIDA ONLY**. USE OF THIS EVALUATION REQUIRES A REVIEW & CERTIFICATION BY A LOCAL DESIGN PROFESSIONAL WHO SHALL BE RESPONSIBLE FOR THE PROPER ADAPTATION OF THIS GENERAL PERFORMANCE EVALUATION TO ANY SITE-SPECIFIC PROJECT. CONTACT THIS OFFICE AT **ENGINEERINGEXPRESS.COM/QUOTE** FOR ASSISTANCE WITH YOUR PROJECT-SPECIFIC NEEDS & FOR ADAPTATION & CERTIFICATION OF THIS DOCUMENT OUTSIDE OF FLORIDA.

DESIGN NOTES:

1. THIS PRODUCT HAS BEEN DESIGNED IN ACCORDANCE WITH ASCE 7-22 AND THE FLORIDA BUILDING CODE 8th EDITION (2023) FOR USE WITHIN AND OUTSIDE THE HIGH VELOCITY HURRICANE ZONE AS INDICATED IN THE ACCOMPANYING DESIGN SCHEDULES. THE DESIGN CRITERIA USED TO CALCULATE THE ALLOWABLE ROOF-TOP HEIGHTS CONSIDERS FBC CHAPTER 16: $(GC_f)_{Lateral}$=1.90 WITHIN THE HVHZ & OUTSIDE THE HVHZ, $(GC_f)_{Uplift}$=1.5 FOR ALL LOCATIONS (CONCURRENT).
2. ALL OTHER DESIGN VARIABLES ARE IN ACCORDANCE WITH ASCE 7 CHAPTERS 26 & 29.
3. THE HEIGHTS LISTED IN THE DESIGN SCHEDULES REPRESENT THE ALLOWABLE HEIGHT OF THE BUILDING.
4. THIS PRODUCT APPROVAL ALLOWS FOR EACH UNIT TO BE INSTALLED ON A MAXIMUM 30" TALL A/C STAND (CERTIFICATION BY OTHERS) ON TOP OF THE HEIGHTS LISTED IN THE DESIGN SCHEDULES.
5. NO 33-1/3% INCREASE IN ALLOWABLE STRESS HAS BEEN USED IN THE DESIGN OF THIS SYSTEM.
6. DESIGN IS BASED ON CLIENT PROVIDED PRODUCT AND DIE SHEETS FROM TEST REPORT PROJECT #15-6206 BY FENESTRATION TESTING LABORATORY, INC.. NO SUBSTITUTIONS WITHOUT WRITTEN APPROVAL BY THIS ENGINEER SHALL BE PERMITTED.
7. STEEL CLIPS SHALL BE ASTM A653 STEEL WITH Fy=33 KSI OR BETTER. STEEL MEMBERS SHALL BE PROTECTED AGAINST CORROSION WITH AN APPROVED COAT OF PAINT, ENAMEL OR OTHER APPROVED PROTECTION. G90-RATED COATING REQUIRED FOR COASTAL INSTALLATIONS.

GENERAL NOTES:

1. THIS PRODUCT HAS BEEN DESIGNED AND SHALL BE FABRICATED IN ACCORDANCE WITH THE REQUIREMENTS OF THE FLORIDA BUILDING CODE & ASCE 7. THIS PRODUCT MAY BE USED WITHIN AND OUTSIDE THE HIGH VELOCITY HURRICANE ZONE.
2. MAXIMUM & MINIMUM DIMENSIONS AND MINIMUM WEIGHT OF MECHANICAL UNIT SHALL CONFORM TO SPECIFICATIONS STATED HEREIN. ALL MECHANICAL SPECIFICATIONS (CLEAR SPACE, TONNAGE, ETC.) SHALL BE AS PER MANUFACTURER RECOMMENDATIONS AND ARE THE EXPRESS RESPONSIBILITY OF THE CONTRACTOR.
3. FASTENERS TO BE #10 X ¾" OR GREATER STAINLESS STEEL 410 UNLESS NOTED OTHERWISE. ANCHORS REFERRED TO HEREIN SHALL BE ELCO BRAND, STAINLESS STEEL ONLY, INSTALLED TO 3000 PSI MIN CONCRETE. SEE ANCHOR TO HOST SCHEDULE FOR ANCHOR REQUIREMENTS. ALL FASTENERS SHALL HAVE APPROPRIATE CORROSION PROTECTION TO PREVENT ELECTROLYSIS.
4. ALL CONCRETE SPECIFIED HEREIN IS NOT PART OF THIS CERTIFICATION. AS A MINIMUM, ALL CONCRETE SHALL BE STRUCTURAL CONCRETE 4" MIN. THICK AND SHALL HAVE MINIMUM COMPRESSIVE STRENGTH OF 3000 PSI, UNLESS NOTED OTHERWISE.
5. THE CONTRACTOR IS RESPONSIBLE TO INSULATE ALL MEMBERS FROM DISSIMILAR MATERIALS TO PREVENT ELECTROLYSIS.
6. ELECTRICAL GROUND, WHEN REQUIRED, TO BE DESIGNED & INSTALLED BY OTHERS.
7. THE ADEQUACY OF ANY EXISTING STRUCTURE TO WITHSTAND SUPERIMPOSED LOADS SHALL BE VERIFIED BY THE ONSITE DESIGN PROFESSIONAL AND IS NOT INCLUDED IN THIS CERTIFICATION.EXCEPT AS EXPRESSLY PROVIDED HEREIN, NO ADDITIONAL CERTIFICATIONS OR AFFIRMATIONS ARE INTENDED.
8. THE SYSTEM DETAILED HEREIN IS GENERIC & DOES NOT PROVIDE INFORMATION FOR A SPECIFIC SITE. THESE PLANS SHALL BE USED ALONG WITH SITE SPECIFIC PLANS & INFORMATION BY OTHERS TO CONSTITUTE APPROVAL FOR PERMIT & CONSTRUCTION.
9. WATER-TIGHTNESS OF EXISTING HOST SUBSTRATE SHALL BE THE FULL RESPONSIBILITY OF THE INSTALLING CONTRACTOR. CONTRACTOR SHALL ENSURE THAT ANY REMOVED OR ALTERED WATERPROOFING MEMBRANE IS RESTORED AFTER FABRICATION AND INSTALLATION OF STRUCTURE PROPOSED HEREIN. THIS ENGINEER SHALL NOT BE RESPONSIBLE FOR ANY WATERPROOFING OR LEAKAGE ISSUES WHICH MAY OCCUR AS WATER-TIGHTNESS SHALL BE THE FULL RESPONSIBILITY OF THE INSTALLING CONTRACTOR.
10. FOR AN EXPLANATION OF EXPOSURE AND RISK CATEGORIES THAT ACCOMPANY THE Vult WIND SPEEDS USED IN THIS APPROVAL, SEE ASCE 7.

VISIT ECALC.IO/61594

FOR SITE SPECIFIC DEVIATIONS & MORE INFORMATION ABOUT THIS DOCUMENT OR SCAN THIS QR CODE

VISIT ENGINEERINGEXPRESS.COM/MIAMITECH FOR ADDITIONAL PLANS, REPORTS & RESOURCES

ENGINEERING EXPRESS®
POSTAL ADDRESS:
401 W. ATLANTIC AVE R10 BOX 219
DELRAY BEACH, FL 33444
ENGINEERINGEXPRESS.COM

MIAMI TECH, INC
361 NW, 74TH ST
MIAMI, FL 33147
(305) 693 - 7054

MIAMI TECH TIE DOWN CLIP
FL STATEWIDE APPROVAL
FLORIDA BUILDING CODE

REMARKS	DRWN	CHKD	DATE
INIT ISSUE	LAO	TSB	2/05/16
2017 FBC	LAO	FLB	8/14/17
2020 FBC	CCB	RWN	6/09/20
2021 FORMATTING	CCH	RWN	11/19/21
2023 FBC	RN	RN	8-15-23

COPYRIGHT ENGINEERING EXPRESS®

23-61594

SCALE: NTS UNLESS NOTED

8/18/2023 5:26 PM RICKN c:\users\rickn\engineering express\production - documents\projects\23-\23-61594 multiple products 2023 fbc update fl19731\2023 fbc\work\drawings & cad\23-61594b-fl19731.2-doc.dwg

8/18/2023 5:26 PM RICKN c:\users\rickn\engineering express\production - documents\projects\23-\23-61594 multiple products 2023 fbc update fl19731\2023 fbc\work\drawings & cad\23-61594b-fl19731.2-doc.dwg

FRANK BENNARDO, PE
PE# 0046549 CA# 9885

FRANK L. BENNARDO LICENSE No PE0046549 STATE OF FLORIDA PROFESSIONAL ENGINEER
08/21/2023

FL19731.2

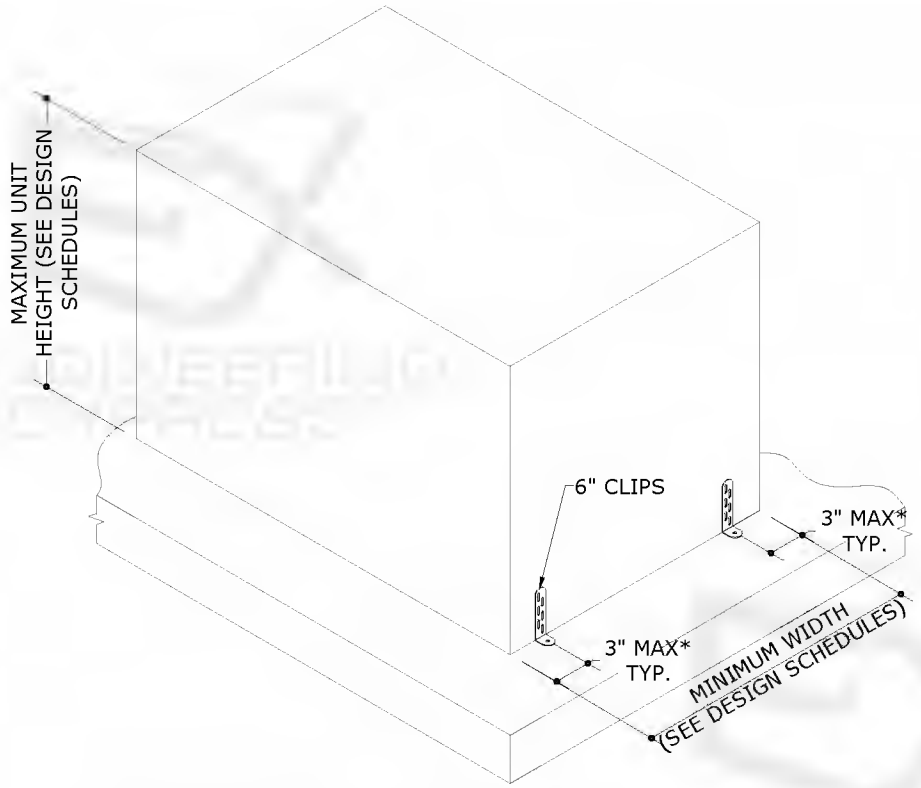

C1 CONNECTION TYPE C1

1"X6" CLIP - UTILIZE (1) AT EACH CORNER FOR A TOTAL OF (4) PER UNIT
NOTE: ALSO APPLICABLE FOR CLIP 4" LONG

*NOTE: SEE ANCHOR TO HOST SCHEDULE FOR ALL EDGE DISTANCE TO ANCHOR SPACING LIMITATIONS. SEE PAGE 4.

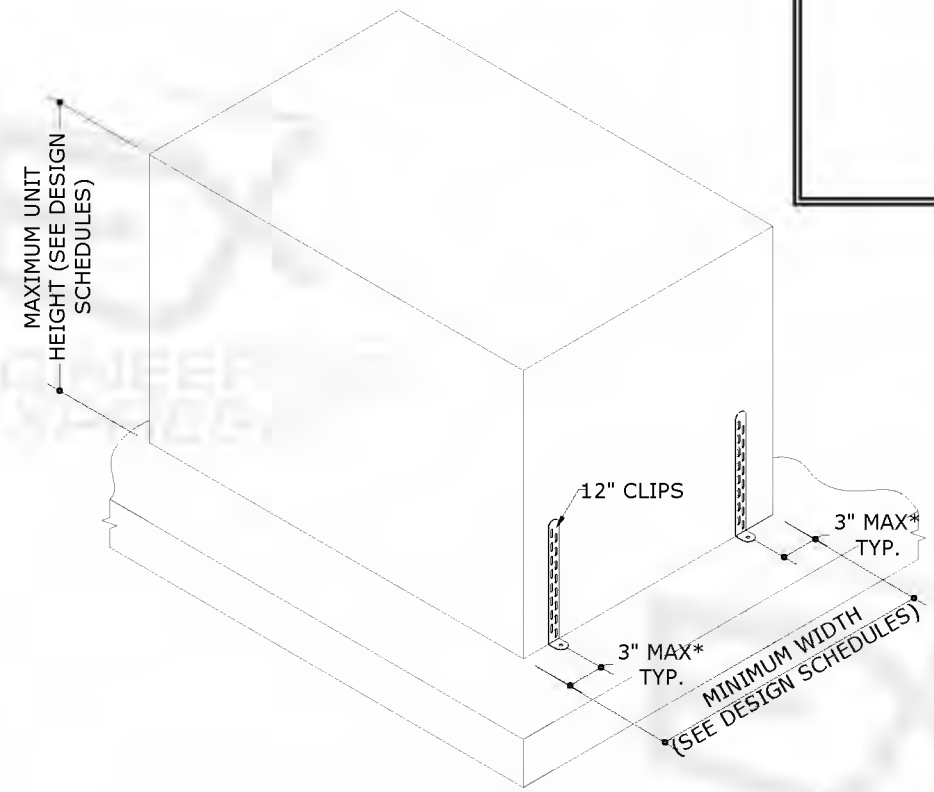

C3 CONNECTION TYPE C3

1"X12" CLIP - UTILIZE (1) AT EACH CORNER FOR A TOTAL OF (4) PER UNIT
NOTE: ALSO APPLICABLE FOR CLIPS 8" & 10" LONG

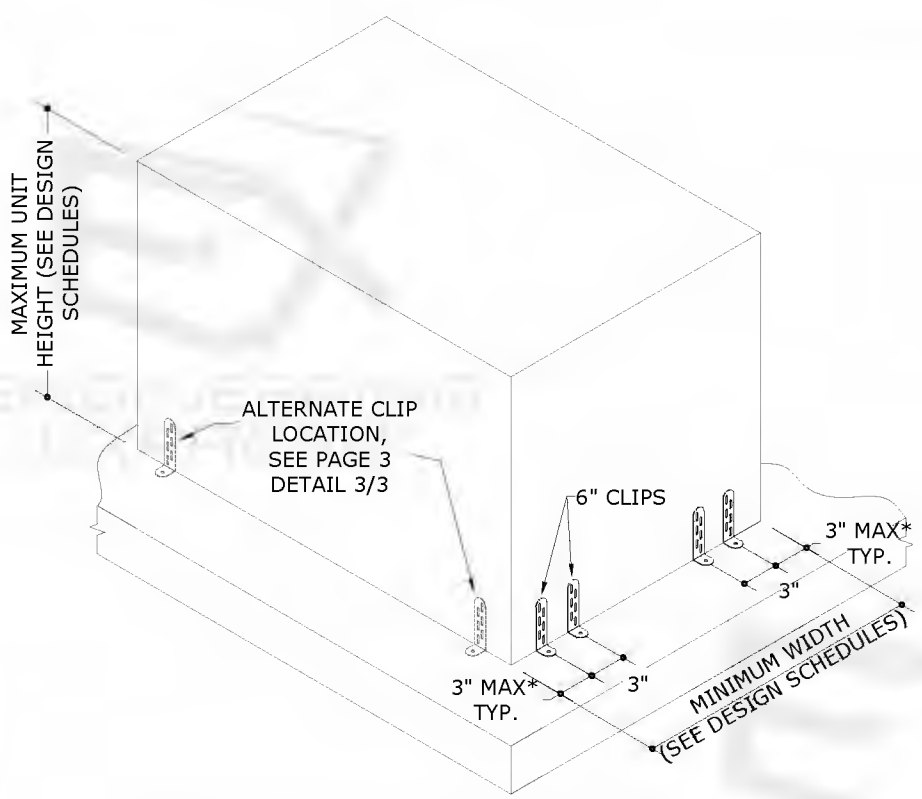

C2 CONNECTION TYPE C2

1"X6" CLIP - UTILIZE (2) AT EACH CORNER FOR A TOTAL OF (8) PER UNIT
NOTE: ALSO APPLICABLE FOR CLIP 4" LONG

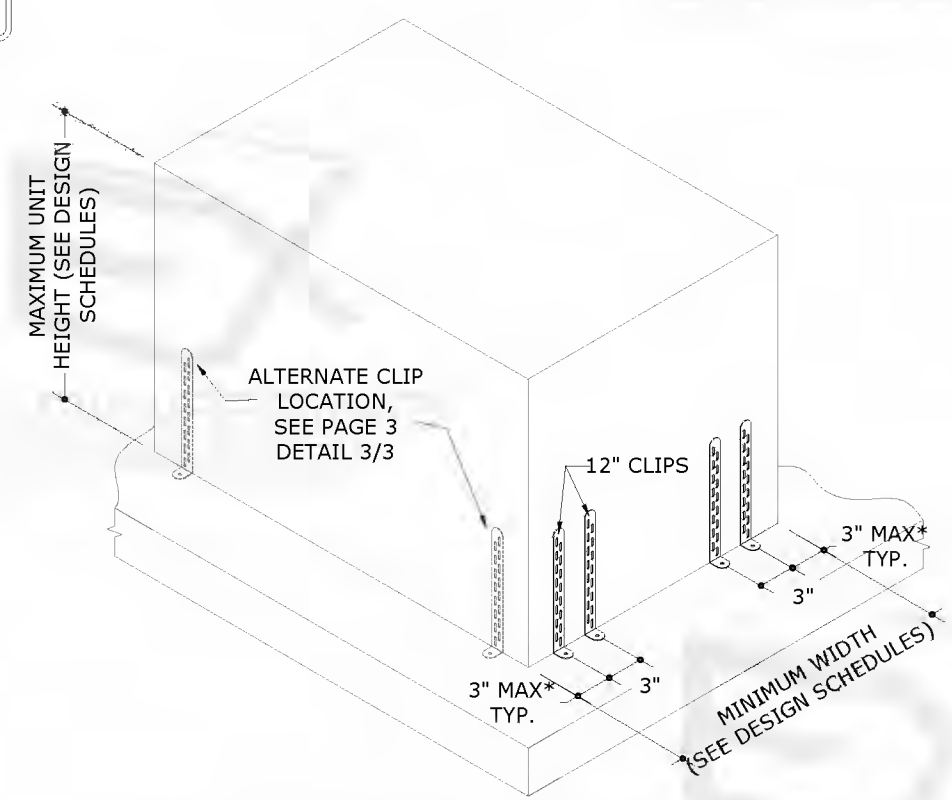

C4 CONNECTION TYPE C4

1"X12" CLIP - UTILIZE (2) AT EACH CORNER FOR A TOTAL OF (8) PER UNIT
NOTE: ALSO APPLICABLE FOR CLIPS 8" & 10" LONG

STEEL TIE-DOWN CLIP

ENGINEERING EXPRESS®
POSTAL ADDRESS:
401 W. ATLANTIC AVE R10 BOX 219
DELRAY BEACH, FL 33444
ENGINEERINGEXPRESS.COM

MIAMI TECH, INC
361 NW, 74TH ST
MIAMI, FL 33147
(305) 693 - 7054

MIAMI TECH TIE DOWN CLIP
FL STATEWIDE APPROVAL
FLORIDA BUILDING CODE

REMARKS	DRWN	CHKD	DATE
INIT ISSUE	LAO	TSB	2/05/16
2017 FBC	LAO	FLB	8/14/17
2020 FBC	CCB	RWN	6/09/20
2021 FORMATTING	CCH	RWN	11/19/21
2023 FBC	RN	RN	8-15-23

COPYRIGHT ENGINEERING EXPRESS®

23-61594

SCALE: NTS UNLESS NOTED

ATTACHMENT TO STAND

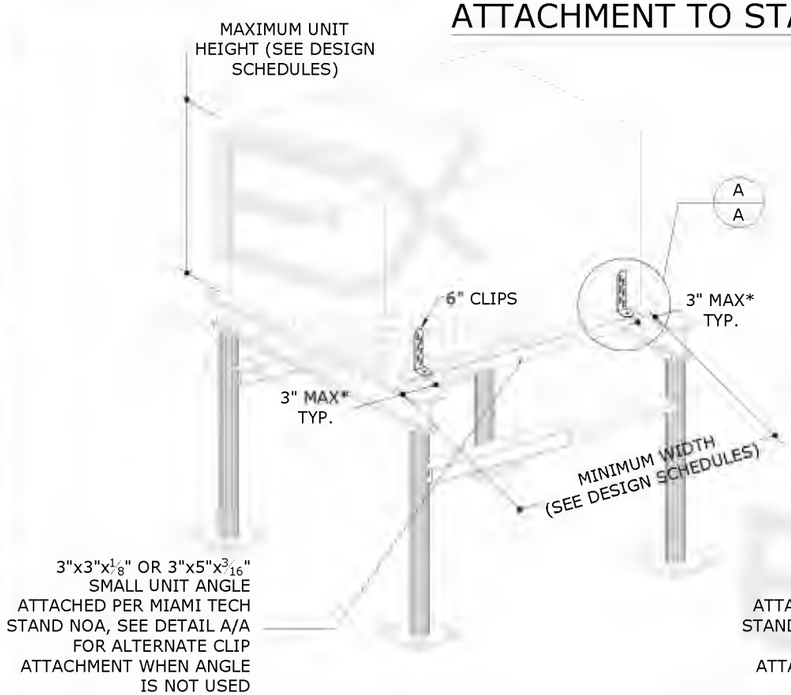

C1 CONNECTION TYPE C1

1"X6" CLIP - UTILIZE (1) AT EACH CORNER FOR A TOTAL OF (4) PER UNIT

NOTE: ALSO APPLICABLE FOR CLIP 4" LONG

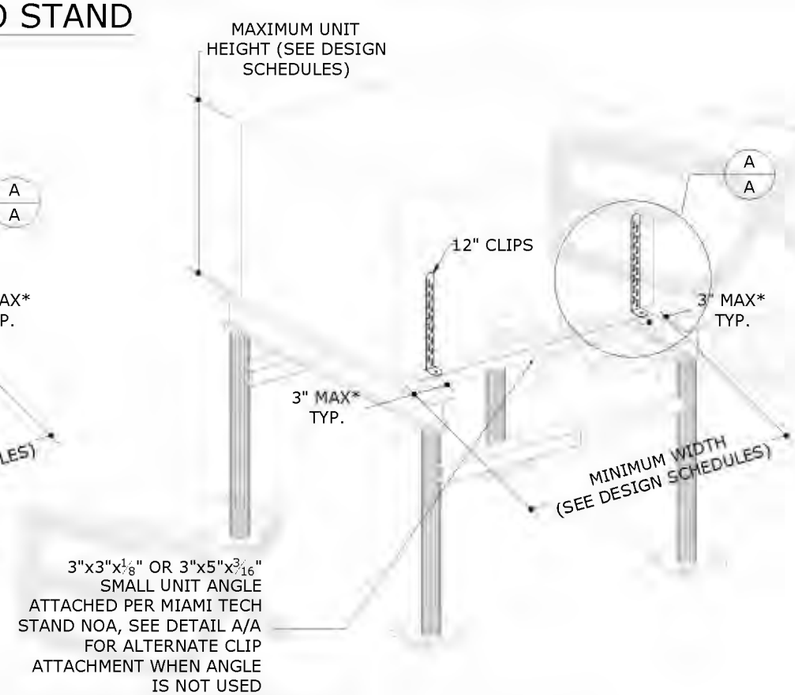

C3 CONNECTION TYPE C3

1"X12" CLIP - UTILIZE (1) AT EACH CORNER FOR A TOTAL OF (4) PER UNIT

NOTE: ALSO APPLICABLE FOR CLIPS 8" & 10" LONG

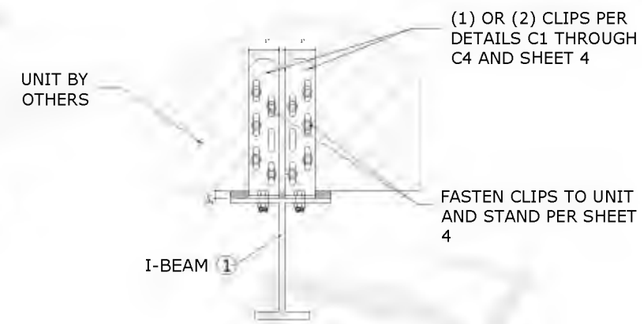

A/A ALTERNATE CLIP TO STAND DETAIL

SCALE: N.T.S.

*NOTE: SEE ANCHOR TO HOST SCHEDULE FOR ALL EDGE DISTANCE TO ANCHOR SPACING LIMITATIONS. SEE PAGE 4.

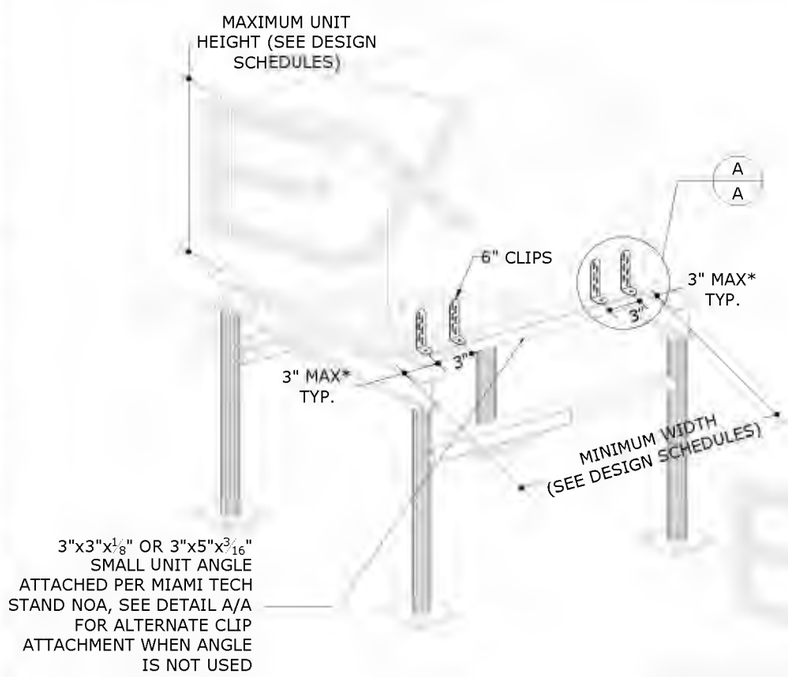

C2 CONNECTION TYPE C2

1"X6" CLIP - UTILIZE (2) AT EACH CORNER FOR A TOTAL OF (8) PER UNIT

NOTE: ALSO APPLICABLE FOR CLIP 4" LONG

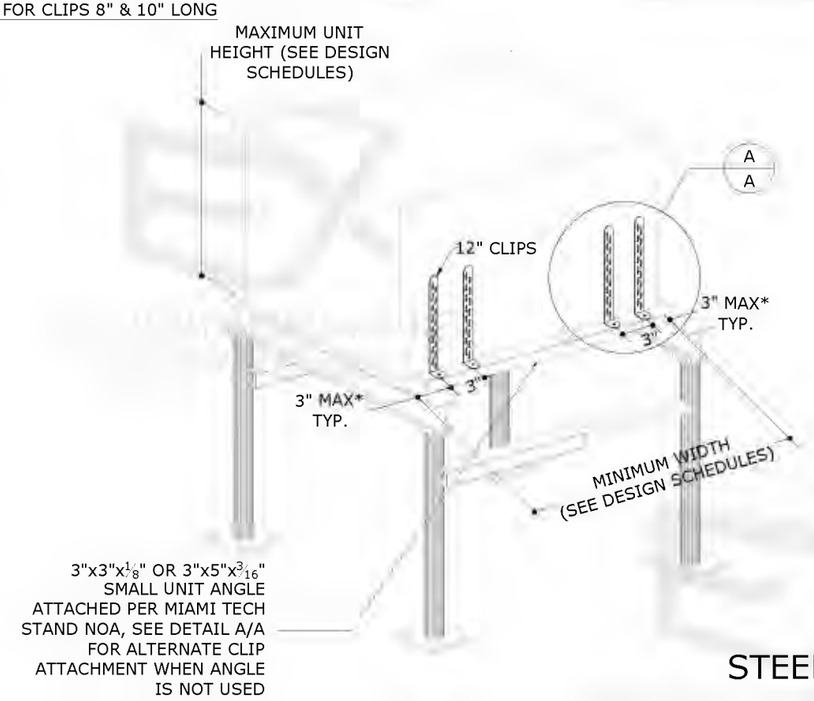

C4 CONNECTION TYPE C4

1"X12" CLIP - UTILIZE (2) AT EACH CORNER FOR A TOTAL OF (8) PER UNIT

NOTE: ALSO APPLICABLE FOR CLIPS 8" & 10" LONG

STEEL TIE-DOWN CLIP

FRANK BENNARDO, PE
PE# 0046549 CA# 9885

FRANK L. BENNARDO LICENSE No PE0046549 STATE OF FLORIDA PROFESSIONAL ENGINEER
08/21/2023

FL19731.2

ENGINEERING EXPRESS®
POSTAL ADDRESS:
401 W. ATLANTIC AVE R10 BOX 219
DELRAY BEACH, FL 33444
ENGINEERINGEXPRESS.COM

MIAMI TECH, INC
361 NW, 74TH ST
MIAMI, FL 33147
(305) 693 - 7054

MIAMI TECH TIE DOWN CLIP
FL STATEWIDE APPROVAL
FLORIDA BUILDING CODE

REMARKS	DRWN	CHKD	DATE
INIT ISSUE	LAO	TSB	2/05/16
2017 FBC	LAO	FLB	8/14/17
2020 FBC	CCB	RWN	6/09/20
2021 FORMATTING	CCH	RWN	11/19/21
2023 FBC	RN	RN	8-15-23

COPYRIGHT ENGINEERING EXPRESS®

23-61594

SCALE: NTS UNLESS NOTED

8/18/2023 5:26 PM RICKN c:\users\rickn\engineering express\production - documents\projects\23\23-61594 multiple products 2023 fbc update fl19731\2023 fbc\work drawings & cad\23-61594b-fl19731.2-doc.dwg

8/18/2023 5:26 PM RICKN c:\users\rickn\engineering express\production - documents\projects\23-\23-61594 multiple products 2023 fbc update fl19731\2023 fbc\work\drawings & cad\23-61594b-fl19731.2-doc.dwg

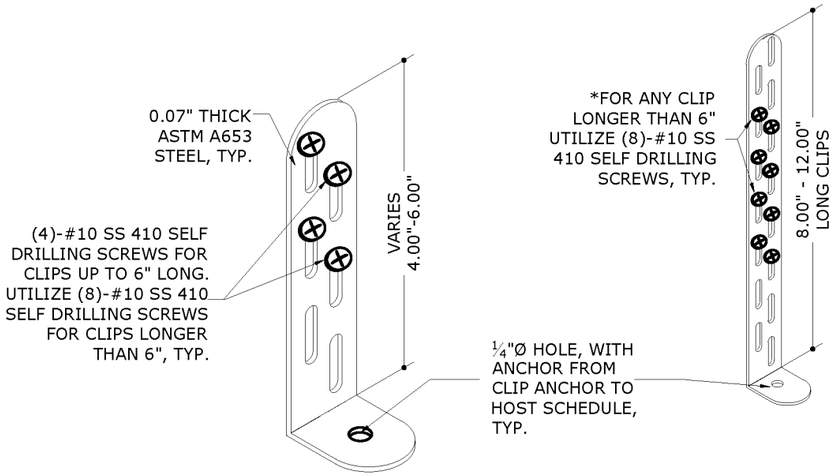

1/4 1" CLIP ISOMETRIC DETAIL

N.T.S. ISOMETRIC

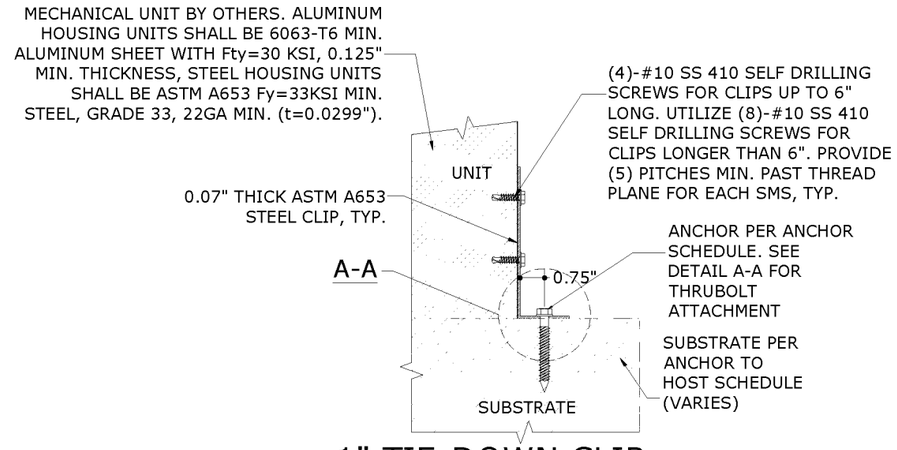

2/4 1" TIE-DOWN CLIP ANCHOR DETAIL

3" = 1'-0" DETAIL

CLIP IS DESIGNED FOR FULL CONTACT WITH THE BASE OF EACH MECHANICAL UNIT, TYP.

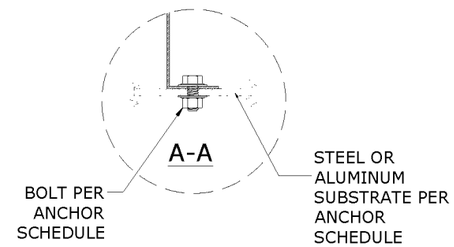

ANCHOR TO HOST SCHEDULE:

SUBSTRATE	DESCRIPTION
CONCRETE: (4" THICK MIN, 3000 PSI MIN.)	(1)-1/4"Ø STAINLESS STEEL 410 DEWALT ULTRACON, 1¾" FULL EMBED TO CONCRETE, 2½" MIN. EDGE DISTANCE, 3" MIN. SPACING TO ANY ADJACENT ANCHOR.
ALUMINUM: (0.125" MIN. THICK, 6061-T6 MIN. ALUMINUM)	(1)-#14 SAE STAINLESS STEEL BOLT 410 WITH NUT AND WASHER TOP & BOTTOM SS OD 1", ½" MINIMUM EDGE DISTANCE TO METAL EDGE
STEEL: (0.125" MIN. THICK, 50 KSI MIN. STEEL)	(1)-#14 SAE STAINLESS STEEL BOLT 410 WITH NUT AND WASHER TOP & BOTTOM SS OD 1", ½" MINIMUM EDGE DISTANCE TO METAL EDGE

1. EMBEDMENT AND EDGE DISTANCE EXCLUDES FINISHES, IF APPLICABLE.
2. ENSURE MINIMUM EDGE DISTANCE AS NOTED IN ANCHOR SCHEDULE.
3. ENSURE MINIMUM SPACING TO ANY ADJACENT ANCHORS.
4. SEE DETAILS ON SHEET 4 FOR ANCHORS ATTACHING TO MECHANICAL UNIT.
5. PROTECT ALL METALS FROM DISSIMILAR METALS GENERAL NOTE #5

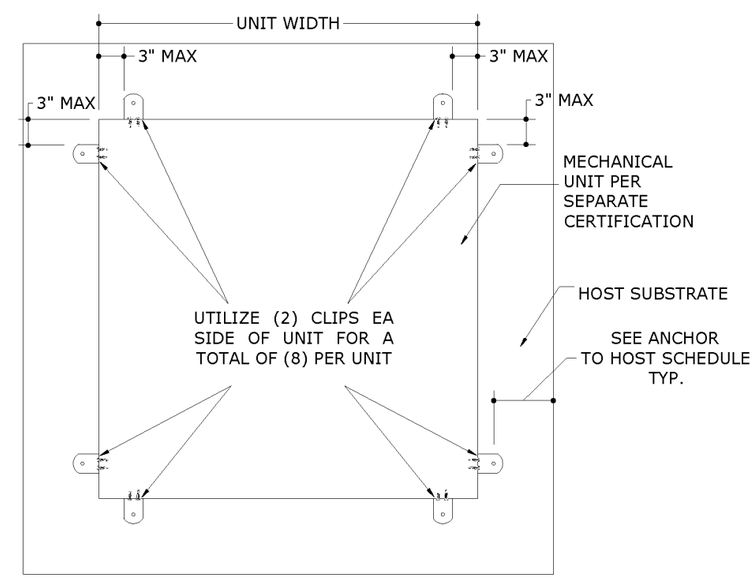

3/4 ALTERNATE (8) CLIP DETAIL

N.T.S. PLAN VIEW

THIS DETAIL MAY BE USED AS AN ALTERNATE GEOMETRIC PATTERN FOR ALL CONNECTION TYPES THAT UTILIZE (2) CLIPS AT EACH CORNER FOR A TOTAL OF (8) CLIPS PER UNIT.

STEEL TIE-DOWN CLIP

FRANK BENNARDO, PE
PE# 0046549 CA# 9885

FRANK L. BENNARDO LICENSE No PE0046549 STATE OF FLORIDA PROFESSIONAL ENGINEER
08/21/2023

FL19731.2

ENGINEERING EXPRESS®
POSTAL ADDRESS:
401 W. ATLANTIC AVE R10 BOX 219
DELRAY BEACH, FL 33444
ENGINEERINGEXPRESS.COM

MIAMI TECH, INC
361 NW, 74TH ST
MIAMI, FL 33147
(305) 693 - 7054

MIAMI TECH TIE DOWN CLIP
FL STATEWIDE APPROVAL
FLORIDA BUILDING CODE

REMARKS	DRWN	CHKD	DATE
INIT ISSUE	LAO	TSB	2/05/16
2017 FBC	LAO	FLB	8/14/17
2020 FBC	CCB	RWN	6/09/20
2021 FORMATTING	CCH	RWN	11/19/21
2023 FBC	RN	RN	8-15-23

COPYRIGHT ENGINEERING EXPRESS®

23-61594

SCALE: NTS UNLESS NOTED

FRANK BENNARDO, PE
PE# 0046549 CA# 9885

FRANK L. BENNARDO LICENSE No PE0046549 STATE OF FLORIDA PROFESSIONAL ENGINEER
08/21/2023

TABLE 1 PERMISSIBLE INSTALLATION HEIGHTS: Vult=175 MPH, EXPOSURE C

(FOR USE WITH A RISK CATEGORY II STRUCTURE IN THE HIGH VELOCITY HURRICANE ZONE (HVHZ)*)
RISK CATEGORY II IS PER ASCE 7-16

MAXIMUM SURFACE AREA OF UNIT'S LARGEST FACE	UNIT HEIGHT	UNIT WIDTH	ALLOWABLE ROOF-TOP HEIGHT (H) TIE-DOWN CONFIGURATION TYPE			
			C1	C2	C3	C4
6 FT²	29" MAX	15" MIN	AT GRADE	H ≤ 200 FT	AT GRADE	H ≤ 200 FT
9 FT²	36" MAX	27" MIN	AT GRADE	H ≤ 200 FT	AT GRADE	H ≤ 200 FT
4 FT²	48" MAX	36" MIN	H ≤ 160 FT	H ≤ 200 FT	H ≤ 200 FT	H ≤ 200 FT
6 FT²			H ≤ 15 FT	H ≤ 200 FT	H ≤ 30 FT	H ≤ 200 FT
9 FT²			AT GRADE	H ≤ 200 FT	AT GRADE	H ≤ 200 FT
12 FT²			N/A	H ≤ 60 FT	N/A	H ≤ 100 FT
16 FT²			N/A	H ≤ 15 FT	N/A	H ≤ 15 FT
20 FT²	60" MAX	48" MIN	N/A	AT GRADE	N/A	AT GRADE
25 FT²			N/A	AT GRADE	N/A	AT GRADE
30 FT²			N/A	N/A	N/A	N/A
36 FT²			N/A	N/A	N/A	N/A

*THIS TABLE IS PERMISSIBLE TO BE USED WITHIN THE **HVHZ** WHICH CONTAINS BROWARD AND MIAMI-DADE COUNTIES. CHECK WITH LOCAL AUTHORITY HAVING JURISDICTION FOR THE APPLICABILITY OF THIS TABLE WITHIN CERTAIN FLORIDA COUNTIES.

TABLE 2 PERMISSIBLE INSTALLATION HEIGHTS: Vult=175 MPH, EXPOSURE D

(FOR USE WITH A RISK CATEGORY II STRUCTURE IN THE HIGH VELOCITY HURRICANE ZONE (HVHZ)*)
RISK CATEGORY II IS PER ASCE 7-16

MAXIMUM SURFACE AREA OF UNIT'S LARGEST FACE	UNIT HEIGHT	UNIT WIDTH	ALLOWABLE ROOF-TOP HEIGHT (H) TIE-DOWN CONFIGURATION TYPE			
			C1	C2	C3	C4
6 FT²	29" MAX	15" MIN	N/A	H ≤ 200 FT	AT GRADE	H ≤ 200 FT
9 FT²	36" MAX	27" MIN	N/A	H ≤ 140FT	N/A	H ≤ 200 FT
4 FT²	48" MAX	36" MIN	H ≤ 80 FT	H ≤ 200 FT	H ≤ 140FT	H ≤ 200 FT
6 FT²			AT GRADE	H ≤ 200 FT	AT GRADE	H ≤ 200 FT
9 FT²			N/A	H ≤ 160 FT	AT GRADE	H ≤ 200 FT
12 FT²			N/A	H ≤ 30 FT	N/A	H ≤ 40 FT
16 FT²			N/A	AT GRADE	N/A	AT GRADE
20 FT²	60" MAX	48" MIN	N/A	AT GRADE	N/A	AT GRADE
25 FT²			N/A	N/A	N/A	N/A
30 FT²			N/A	N/A	N/A	N/A
36 FT²			N/A	N/A	N/A	N/A

*THIS TABLE IS PERMISSIBLE TO BE USED WITHIN THE **HVHZ** WHICH CONTAINS BROWARD AND MIAMI-DADE COUNTIES. CHECK WITH LOCAL AUTHORITY HAVING JURISDICTION FOR THE APPLICABILITY OF THIS TABLE WITHIN CERTAIN FLORIDA COUNTIES.

TABLE 3 PERMISSIBLE INSTALLATION HEIGHTS: Vult=170 MPH, EXPOSURE C

(FOR USE WITH A RISK CATEGORY II STRUCTURE**)
RISK CATEGORY II IS PER ASCE 7-16

MAXIMUM SURFACE AREA OF UNIT'S LARGEST FACE	UNIT HEIGHT	UNIT WIDTH	ALLOWABLE INSTALLATION ROOF HEIGHT TIE-DOWN CONFIGURATION TYPE			
			C1	C2	C3	C4
6 ft²	29 in	15 in	AT GRADE	≤ 200 FT	AT GRADE	≤ 200 FT
9 ft²	36 in	27 in	AT GRADE	≤ 200 FT	AT GRADE	≤ 200 FT
4 ft²	48 in	36 in	≤ 200 FT	≤ 200 FT	≤ 200 FT	≤ 200 FT
6 ft²	48 in	36 in	H ≤ 30 FT	≤ 200 FT	H ≤ 40 FT	≤ 200 FT
9 ft²	48 in	36 in	AT GRADE	≤ 200 FT	AT GRADE	≤ 200 FT
12 ft²	48 in	36 in	N/A	≤ 80 FT	N/A	≤ 140 FT
16 ft²	48 in	36 in	N/A	H ≤ 15 FT	N/A	H ≤ 30 FT
20 ft²	60 in	48 in	N/A	AT GRADE	N/A	AT GRADE
25 ft²	60 in	48 in	N/A	AT GRADE	N/A	AT GRADE
30 ft²	60 in	48 in	N/A	N/A	N/A	AT GRADE
36 ft²	60 in	48 in	N/A	N/A	N/A	N/A

TABLE 4 PERMISSIBLE INSTALLATION HEIGHTS: Vult=170 MPH, EXPOSURE D

(FOR USE WITH A RISK CATEGORY II STRUCTURE**)
RISK CATEGORY II IS PER ASCE 7-16

MAXIMUM SURFACE AREA OF UNIT'S LARGEST FACE	UNIT HEIGHT	UNIT WIDTH	ALLOWABLE INSTALLATION ROOF HEIGHT TIE-DOWN CONFIGURATION TYPE			
			C1	C2	C3	C4
6 ft²	29 in	15 in	AT GRADE	≤ 200 FT	AT GRADE	≤ 200 FT
9 ft²	36 in	27 in	N/A	≤ 200 FT	AT GRADE	≤ 200 FT
4 ft²	48 in	36 in	≤ 120 FT	≤ 200 FT	≤ 200 FT	≤ 200 FT
6 ft²	48 in	36 in	AT GRADE	≤ 200 FT	H ≤ 15 FT	≤ 200 FT
9 ft²	48 in	36 in	N/A	≤ 200 FT	AT GRADE	≤ 200 FT
12 ft²	48 in	36 in	N/A	H ≤ 40 FT	N/A	H ≤ 60 FT
16 ft²	48 in	36 in	N/A	AT GRADE	N/A	AT GRADE
20 ft²	60 in	48 in	N/A	AT GRADE	N/A	AT GRADE
25 ft²	60 in	48 in	N/A	N/A	N/A	N/A
30 ft²	60 in	48 in	N/A	N/A	N/A	N/A
36 ft²	60 in	48 in	N/A	N/A	N/A	N/A

**AS AN EXAMPLE, THESE TABLES ARE PERMISSIBLE TO BE USED WITHIN PALM BEACH COUNTY. CHECK WITH LOCAL AUTHORITY HAVING JURISDICTION FOR THE APPLICABILITY OF THESE TABLES WITHIN CERTAIN FLORIDA COUNTIES.

STEEL TIE-DOWN CLIP

FL19731.2

ENGINEERING EXPRESS®
POSTAL ADDRESS:
401 W. ATLANTIC AVE R10 BOX 219
DELRAY BEACH, FL 33444
ENGINEERINGEXPRESS.COM

MIAMI TECH, INC
361 NW, 74TH ST
MIAMI, FL 33147
(305) 693 - 7054

MIAMI TECH TIE DOWN CLIP
FL STATEWIDE APPROVAL
FLORIDA BUILDING CODE

REMARKS	DRWN	CHKD	DATE
INIT ISSUE	LAO	TSB	2/05/16
2017 FBC	LAO	FLB	8/14/17
2020 FBC	CCB	RWN	6/09/20
2021 FORMATTING	CCH	RWN	11/19/21
2023 FBC	RN	RN	8-15-23

COPYRIGHT ENGINEERING EXPRESS®

23-61594

SCALE: NTS UNLESS NOTED

8/18/2023 5:26 PM RICKN c:\users\rickn\engineering express\production - documents\projects\23-\23-61594 multiple products 2023 fbc update fl19731\2023 fbc\work\drawings & cad\23-61594b-fl19731.2-doc.dwg

FRANK BENNARDO, PE
PE# 0046549 CA# 9885

FRANK L. BENNARDO LICENSE No PE0046549 STATE OF FLORIDA PROFESSIONAL ENGINEER
08/21/2023

FL19731.2

TABLE 5 PERMISSIBLE INSTALLATION HEIGHTS: Vult=140 MPH, EXPOSURE B

(FOR USE WITH A RISK CATEGORY II STRUCTURE***)
RISK CATEGORY II IS PER ASCE 7-16

MAXIMUM SURFACE AREA OF UNIT'S LARGEST FACE	UNIT HEIGHT	UNIT WIDTH	ALLOWABLE INSTALLATION ROOF HEIGHT TIE-DOWN CONFIGURATION TYPE C1	C2	C3	C4
6 ft²	29 in	15 in	≤ 100 FT	≤ 200 FT	≤ 140 FT	≤ 200 FT
9 ft²	36 in	27 in	≤ 80 FT	≤ 200 FT	≤ 100 FT	≤ 200 FT
4 ft²	48 in	36 in	≤ 200 FT	≤ 200 FT	≤ 200 FT	≤ 200 FT
6 ft²	48 in	36 in	≤ 200 FT	≤ 200 FT	≤ 200 FT	≤ 200 FT
9 ft²	48 in	36 in	≤ 80 FT	≤ 200 FT	≤ 120 FT	≤ 200 FT
12 ft²	48 in	36 in	H ≤ 30 FT	≤ 200 FT	H ≤ 40 FT	≤ 200 FT
16 ft²	48 in	36 in	AT GRADE	≤ 200 FT	H ≤ 15 FT	≤ 200 FT
20 ft²	60 in	48 in	AT GRADE	≤ 160 FT	AT GRADE	≤ 200 FT
25 ft²	60 in	48 in	N/A	H ≤ 60 FT	AT GRADE	≤ 100 FT
30 ft²	60 in	48 in	N/A	H ≤ 30 FT	N/A	H ≤ 40 FT
36 ft²	60 in	48 in	N/A	H ≤ 15 FT	N/A	H ≤ 15 FT

TABLE 6 PERMISSIBLE INSTALLATION HEIGHTS: Vult=140 MPH, EXPOSURE C

(FOR USE WITH A RISK CATEGORY II STRUCTURE***)
RISK CATEGORY II IS PER ASCE 7-16

MAXIMUM SURFACE AREA OF UNIT'S LARGEST FACE	UNIT HEIGHT	UNIT WIDTH	ALLOWABLE INSTALLATION ROOF HEIGHT TIE-DOWN CONFIGURATION TYPE C1	C2	C3	C4
6 ft²	29 in	15 in	H ≤ 30 FT	≤ 200 FT	H ≤ 40 FT	≤ 200 FT
9 ft²	36 in	27 in	H ≤ 15 FT	≤ 200 FT	H ≤ 30 FT	≤ 200 FT
4 ft²	48 in	36 in	≤ 200 FT	≤ 200 FT	≤ 200 FT	≤ 200 FT
6 ft²	48 in	36 in	≤ 200 FT	≤ 200 FT	≤ 200 FT	≤ 200 FT
9 ft²	48 in	36 in	H ≤ 15 FT	≤ 200 FT	H ≤ 40 FT	≤ 200 FT
12 ft²	48 in	36 in	AT GRADE	≤ 200 FT	AT GRADE	≤ 200 FT
16 ft²	48 in	36 in	N/A	≤ 140 FT	AT GRADE	≤ 200 FT
20 ft²	60 in	48 in	N/A	H ≤ 40 FT	N/A	≤ 80 FT
25 ft²	60 in	48 in	N/A	H ≤ 15 FT	N/A	H ≤ 30 FT
30 ft²	60 in	48 in	N/A	AT GRADE	N/A	AT GRADE
36 ft²	60 in	48 in	N/A	AT GRADE	N/A	AT GRADE

TABLE 7 PERMISSIBLE INSTALLATION HEIGHTS: Vult=140 MPH, EXPOSURE D

(FOR USE WITH A RISK CATEGORY II STRUCTURE***)
RISK CATEGORY II IS PER ASCE 7-16

MAXIMUM SURFACE AREA OF UNIT'S LARGEST FACE	UNIT HEIGHT	UNIT WIDTH	ALLOWABLE INSTALLATION ROOF HEIGHT TIE-DOWN CONFIGURATION TYPE C1	C2	C3	C4
6 ft²	29 in	15 in	AT GRADE	≤ 200 FT	H ≤ 15 FT	≤ 200 FT
9 ft²	36 in	27 in	AT GRADE	≤ 200 FT	AT GRADE	≤ 200 FT
4 ft²	48 in	36 in	≤ 200 FT	≤ 200 FT	≤ 200 FT	≤ 200 FT
6 ft²	48 in	36 in	≤ 100 FT	≤ 200 FT	≤ 180 FT	≤ 200 FT
9 ft²	48 in	36 in	AT GRADE	≤ 200 FT	H ≤ 15 FT	≤ 200 FT
12 ft²	48 in	36 in	AT GRADE	≤ 200 FT	AT GRADE	≤ 200 FT
16 ft²	48 in	36 in	N/A	≤ 80 FT	N/A	≤ 120 FT
20 ft²	60 in	48 in	N/A	H ≤ 15 FT	N/A	H ≤ 40 FT
25 ft²	60 in	48 in	N/A	AT GRADE	N/A	AT GRADE
30 ft²	60 in	48 in	N/A	AT GRADE	N/A	AT GRADE
36 ft²	60 in	48 in	N/A	N/A	N/A	AT GRADE

***AS AN EXAMPLE, THESE TABLES ARE PERMISSIBLE TO BE USED WITHIN BREVARD COUNTY. CHECK WITH LOCAL AUTHORITY HAVING JURISDICTION FOR THE APPLICABILITY OF THIS TABLE WITHIN CERTAIN FLORIDA COUNTIES.

STEEL TIE-DOWN CLIP

ENGINEERING EXPRESS®
POSTAL ADDRESS:
401 W. ATLANTIC AVE R10 BOX 219
DELRAY BEACH, FL 33444
ENGINEERINGEXPRESS.COM

MIAMI TECH, INC
361 NW, 74TH ST
MIAMI, FL 33147
(305) 693 - 7054

MIAMI TECH TIE DOWN CLIP
FL STATEWIDE APPROVAL
FLORIDA BUILDING CODE

REMARKS	DRWN	CHKD	DATE
INIT ISSUE	LAO	TSB	2/05/16
2017 FBC	LAO	FLB	8/14/17
2020 FBC	CCB	RWN	6/09/20
2021 FORMATTING	CCH	RWN	11/19/21
2023 FBC	RN	RN	8-15-23

COPYRIGHT ENGINEERING EXPRESS®

23-61594

SCALE: NTS UNLESS NOTED

8/18/2023 5:26 PM RICKN c:\users\rickn\engineering express\production - documents\projects\23-\23-61594 multiple products 2023 fbc update fl19731\2023 fbc\work\drawings & cad\23-61594b-fl19731.2-doc.dwg

PRECISION ALUMINUM PRODUCTS, INC.

ALUMINUM A/C STAND

VALID FOR USE OUTSIDE THE HVHZ ONLY (SEE LIMITATIONS HEREIN)

NON-SITE-SPECIFIC STRUCTURAL PERFORMANCE EVALUATION. A DESIGN PROFESSIONAL SHALL BE RESPONSIBLE FOR CERTIFYING THE APPLICATION OF THIS INFORMATION TO ANY SITE-SPECIFIC LOCATION.

FRANK BENNARDO, P.E.
PE# 0046549 CA# 9885

FRANK L. BENNARDO LICENSE No PE0046549 STATE OF FLORIDA PROFESSIONAL ENGINEER

DECEMBER 21, 2023

Digitally signed by Frank Bennardo
Date: 2023.12.28 10:45:07 -05'00'

FL 16921.1

DESIGN NOTES:

DESIGN PRESSURES CALCULATED FOR USE WITH THIS SYSTEM SHALL BE DETERMINED SEPARATELY ON A JOB-SPECIFIC BASIS IN ACCORDANCE WITH THE GOVERNING CODE USING ASD METHODOLOGY. SITE-SPECIFIC PRESSURE REQUIREMENTS AS DETERMINED IN ACCORDANCE WITH ASCE 7 AND CHAPTER 16 OF THE FLORIDA BUILDING CODE EIGHTH EDITION (2023) SHALL BE LESS THAN OR EQUAL TO THE LATERAL AND UPLIFT DESIGN PRESSURE CAPACITY VALUES LISTED HEREIN FOR ANY ASSEMBLY AS SHOWN.

MAXIMUM ALLOWABLE DESIGN PRESSURES (ASD):

AS NOTED IN DESIGN SCHEDULES

NOTE REGARDING USE OF THIS DOCUMENT & USE OUTSIDE FLORIDA:

NON-SITE-SPECIFIC STRUCTURAL PERFORMANCE EVALUATION. THIS PRODUCT EVALUATION IS VALID FOR USE IN **FLORIDA ONLY**. USE OF THIS EVALUATION REQUIRES A REVIEW & CERTIFICATION BY A LOCAL DESIGN PROFESSIONAL WHO SHALL BE RESPONSIBLE FOR THE PROPER ADAPTATION OF THIS GENERAL PERFORMANCE EVALUATION TO ANY SITE-SPECIFIC PROJECT. CONTACT THIS OFFICE AT **ENGINEERINGEXPRESS.COM/QUOTE** FOR ASSISTANCE WITH YOUR PROJECT-SPECIFIC NEEDS & FOR ADAPTATION & CERTIFICATION OF THIS DOCUMENT OUTSIDE OF FLORIDA.

GENERAL NOTES

1. THIS SYSTEM HAS BEEN DESIGNED AND SHALL BE FABRICATED IN ACCORDANCE WITH THE STRUCTURAL PROVISIONS OF THE FLORIDA BUILDING CODE EIGHTH EDITION (2023) FOR USE WITHIN AND OUTSIDE OF THE HIGH VELOCITY HURRICANE ZONE.

2. PRESSURE VALUES ON THIS APPROVAL ARE (ASD) ALLOWABLE DESIGN PRESSURES.

3. CONTRACTOR SHALL ENSURE THAT EACH INSTALLATION ASSEMBLY MEET THE MINIMUM CLEARANCE HEIGHT PER FBC SECTION 1510.10 FOR NON-HVHZ APPLICATIONS AND SECTION 1522.2 FOR HVHZ APPLICATIONS.

4. SEISMIC DESIGN DOES NOT GOVERN. SEISMIC PARAMETERS CHECKED: RISK CATEGORY II, IMPORTANCE FACTOR 1.0, Ss=0.057, S1=0.022, SITE CLASS D, Sds=0.061, Sd1=0.0355, SEISMIC DESIGN CATEGORY D, SEISMIC DEMANDS ON NON-STRUCTURAL COMPONENTS (MECHANICAL COMPONENTS, AC UNITS), FpMAX = 46 LBS, Ap=2.5, Rp=6.0, UP TO 200' MRH.

5. MAXIMUM DIMENSIONS AND WEIGHT OF A/C UNIT SHALL CONFORM TO SPECIFICATIONS STATED HEREIN, MINIMUM 75LB OR MAXIMUM AS LISTED HEREIN.

6. THE ARCHITECT/ENGINEER OF RECORD FOR THE PROJECT SUPERSTRUCTURE WITH WHICH THIS DESIGN IS USED SHALL BE RESPONSIBLE FOR THE INTEGRITY OF ALL SUPPORTING SURFACES TO THIS DESIGN WHICH SHALL BE COORDINATED BY THE PERMITTING CONTRACTOR. WOOD BUCKS (BY OTHERS) SHALL BE ANCHORED PROPERLY TO TRANSFER LOADS TO EXISTING STRUCTURE.

7. REACTION FORCES LISTED FOR USE WITH HOST STRUCTURE VERIFICATION ARE CALCULATED USING ASD METHODOLOGY. DESIGN PROFESSIONAL OF RECORD TO VERIFY APPLICABILITY AND/OR ADDITIONAL FACTORS FOR USE WITH HOST STRUCTURE VERIFICATION.

8. ALL FASTENERS TO BE #14 OR GREATER SAE GRADE 5, UNLESS NOTED OTHERWISE, CADMIUM PLATED OR OTHERWISE CORROSION RESISTANT MATERIAL AND SHALL COMPLY WITH ANY APPLICABLE FEDERAL,STATE, AND LOCAL CODES. PROVIDE (5) PITCHES MIN PAST THREAD PLANE, 3X THE FASTENER DIAMETER MIN. SPACING & 2X THE FASTENER DIAMETER MIN. EDGE DISTANCE TO ANY ALUMINUM EDGE, U.N.O.. FASTENERS SHALL BE CADMIUM-PLATED OR OTHERWISE CORROSION-RESISTANT MATERIAL AND SHALL COMPLY WITH "SPECIFICATIONS FOR ALUMINUM STRUCTURES" SECTION J.3.7.2 BY THE ALUMINUM ASSOCIATION IN.C, AND ANY APPLICABLE FEDERAL, STATE AND OR LOCAL CODES.

9. REFER TO FASTENER MANUFACTURER'S PUBLISHED DATA SHEETS AND RECOMMENDATIONS FOR FASTENER INSTALLATION INSTRUCTIONS.

GENERAL NOTES (CONTINUED):

10. ALL EXTRUDED MEMBERS SHALL BE ALUMINUM ALLOY TYPE 6061-T6 OR 6005-T5.

11. ALL EXISTING CONCRETE SUBSTRATE SHALL HAVE MINIMUM f'c COMPRESSIVE STRENGTH OF 3000 PSI AS VERIFIED BY OTHERS.

12. ALUMINUM WELDING SHALL BE PERFORMED IN ACCORDANCE WITH FBC SECTION 2003.8.1.4 WITH WELD FILLER ALLOYS MEETING ANSI/AWS A5.10 STANDARDS TO ACHIEVE ULTIMATE DESIGN STRENGTH IN ACCORDANCE WITH THE ALUMINUM DESIGN MANUAL, TABLE A.3.6 WELD FILLER: 5383 ELECTRODES. ALL ALUMINUM CONSTRUCTION SHALL BE IN CONFORMANCE WITH THE TOLERANCES, QUALITY AND METHODS OF CONSTRUCTION AS SET FORTH IN FBC SECTION 2003.2 AND THE AMERICAN WELDING SOCIETY'S STRUCTURAL WELDING CODE-ALUMINUM. MINIMUM WELD IS 1/8" THROAT FULL PERIMETER FILLET WELD UNLESS OTHERWISE NOTED.

13. THE CONTRACTOR IS RESPONSIBLE TO INSULATE MEMBERS FROM DISSIMILAR MATERIALS TO PREVENT ELECTROLYSIS.

14. ELECTRICAL GROUND, WHEN REQUIRED, TO BE DESIGNED & INSTALLED BY OTHERS. ALL MECHANICAL SPECIFICATIONS (CLEAR SPACE, TONNAGE, ETC.) SHALL BE AS PER MANUFACTURER RECOMMENDATIONS AND ARE THE EXPRESS RESPONSIBILITY OF THE CONTRACTOR.

15. ENGINEER SEAL AFFIXED HERETO VALIDATES STRUCTURAL DESIGN AS SHOWN ONLY. USE OF THIS SPECIFICATION BY CONTRACTOR, et. al. INDEMNIFIES & SAVES HARMLESS THIS ENGINEER FOR ALL COST & DAMAGES INCLUDING LEGAL FEES & APPELLATE FEES RESULTING FROM MATERIAL FABRICATION, SYSTEM ERECTION, CONSTRUCTION PRACTICES BEYOND THAT WHICH IS CALLED FOR BY LOCAL, STATE, & FEDERAL CODES & FROM DEVIATIONS OF THIS PLAN.

16. THE SYSTEM DETAILED HEREIN IS GENERIC AND DOES NOT PROVIDE INFORMATION FOR A SPECIFIC SITE. FOR SITE CONDITIONS DIFFERENT FROM THE CONDITIONS DETAILED HEREIN, A LICENSED ENGINEER OR REGISTERED ARCHITECT SHALL PREPARE SITE SPECIFIC DOCUMENTS FOR USE IN CONJUNCTION WITH THIS DOCUMENT.

17. ALTERATIONS ADDITIONS OR OTHER MARKINGS TO THIS DOCUMENT ARE NOT PERMITTED AND INVALIDATE THIS CERTIFICATION.

18. EXCEPT AS EXPRESSLY PROVIDED HEREIN, NO ADDITIONAL CERTIFICATIONS OR AFFIRMATIONS ARE INTENDED.

19. AC STANDS SHALL BE LABELED CONTAINING:

PRECISION ALUMINUM PRODUCTS, INC.
DEERFIELD BEACH, FL
FLORIDA PRODUCT APPROVAL NUMBER

PAGE INDEX:

SHEET INDEX

# SHEET	DESCRIPTION
1	COVER SHEET
2	ASSEMBLY ELEVATIONS & PARTS
3	STAND COMPONENTS & CALCULATION DIRECTIVE
4-7	"STD" STAND DESIGN SCHEDULE
8-11	"HD" STAND DESIGN SCHEDULE
11-14	"XHD" STAND DESIGN SCHEDULE
14-16	"FIXED HD" STAND DESIG SCHEDULE
16	"XHD" CUSTOM BRACE STAND DESIGN SCHEDULE
17-18	FRAME ASSEMBLY & UNIT TIE-DOWN DETAILS

TERMINOLOGY:

THE FOLLOWING ABBREVIATIONS APPEAR IN THIS APPROVAL: "ER" FOR "END RETENTION", "NER" FOR "NON-END RETENTION", "INC." FOR "INCORPORATION", "CORP." FOR "CORPORATION", "ALUM" FOR "ALUMINUM, "ASD" FOR "ALLOWABLE STRESS DESIGN", "ASTM" FOR "AMERICAN SOCIETY FOR TESTING AND MATERIALS", "CS" FOR "CARBON STEEL","CONN" FOR "CONNECTION", "EMBED" FOR "EMBEDMENT", "DIST." FOR "DISTANCE", "GA" FOR "GAUGE", "HVHZ" FOR "HIGH-VELOCITY HURRICANE ZONE", "LB" FOR "POUND", "MAX" FOR "MAXIMUM, "N.T.S." FOR "NOT TO SCALE", "PSF" FOR "POUNDS PER SQUARE FOOT (lb/ft²)", "SPECS" FOR "SPECIFICATIONS", "&" FOR "AND", "MAX" FOR "MAXIMUM", "W/" FOR "WITH", "EXIST" FOR "EXISTING, "STRUCT" FOR "STRUCTURE", "CONC." FOR "CONCRETE". CONTACT ENGINEERING EXPRESS FOR ADDITIONAL ABBREVIATION/TERMINOLOGY CLARIFICATIONS.

VISIT ECALC.IO/69401

FOR SITE-SPECIFIC DEVIATIONS & MORE INFORMATION ABOUT THIS DOCUMENT OR SCAN THIS QR CODE

VISIT ENGINEERINGEXPRESS.COM/STORE FOR ADDITIONAL PLANS, REPORTS & RESOURCES

ENGINEERING EXPRESS®
POSTAL ADDRESS:
2234 NORTH FEDERAL HWY #7664
BOCA RATON, FL 33431
ENGINEERINGEXPRESS.COM

PRECISION ALUMINUM PRODUCTS, INC.
1339 SW 1ST WAY
DEERFIELD BEACH, FL 33441
(954) 480-6919

ALUMINUM A/C STANDS
FLORIDA BUILDING CODE EIGHTH EDITION (2023)
FLORIDA STATEWIDE APPROVAL (FSA FL#16921.1)

REMARKS	DRWN	CHKD	DATE
PREV. SUBMITTAL [20-32768]	CSL	RWN	12/15/20
2023 FBC UPDATE & TECH. CHANGES	MRT	RWN	12/08/23

COPYRIGHT ENGINEERING EXPRESS®

23-69401

SCALE: NTS UNLESS NOTED

12/21/2023 1:55 PM MILTON c:\users\milton\engineering express\production - documents\projects\23-\23-69401 2023 product fbc update fl16921\work\2023 fbc\drawings & cad\23-69401c - fl16921.1 - cad.dwg

ALUMINUM A/C STAND

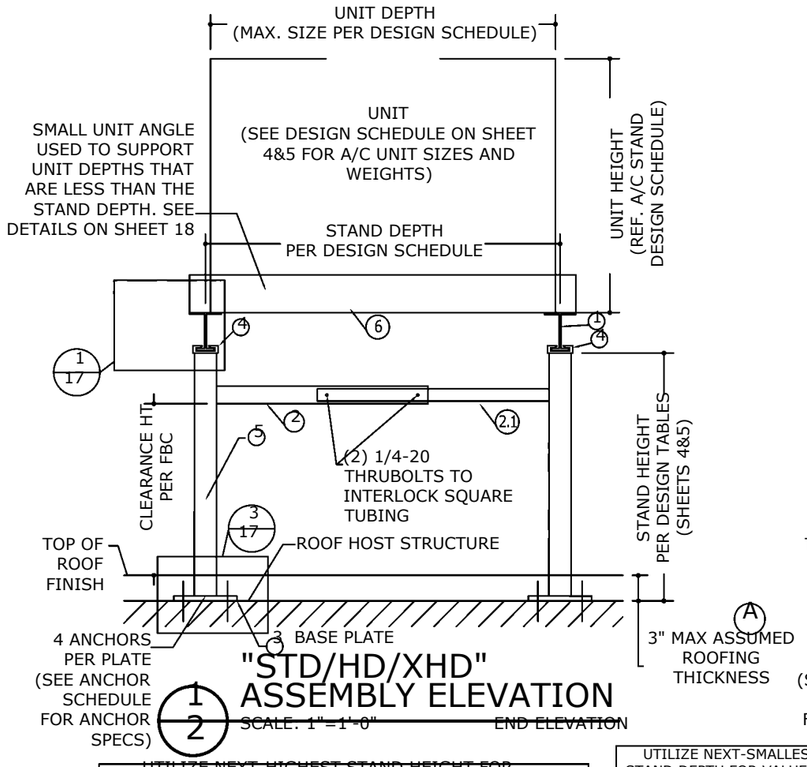

"STD/HD/XHD" ASSEMBLY ELEVATION

1/2 SCALE: 1"=1'-0" END ELEVATION

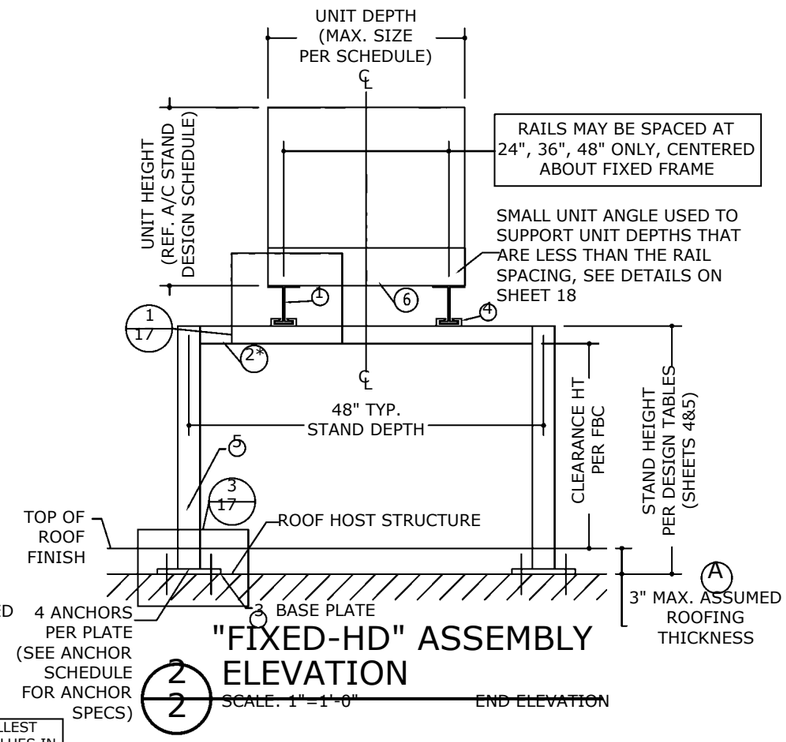

"FIXED-HD" ASSEMBLY ELEVATION

2/2 SCALE: 1"=1'-0" END ELEVATION

A UTILIZE NEXT-HIGHEST STAND HEIGHT FOR LARGER ROOF THICKNESS. FOR ROOFING WITHOUT INSULATION OMIT 3" THICKNESS AND UTILIZE CLEAR HEIGHT FROM FINISHED FLOOR. SPECIAL CONDITIONS REQUIRE SITE-SPECIFIC ENGINEERING.

UTILIZE NEXT-SMALLEST STAND DEPTH FOR VALUES IN BETWEEN EXISTING TABLES

75# MIN./450 # MAX
(800# MAX w/XHD STANDS)
UNIT WEIGHT AS VERIFIED BY OTHERS, TYP.

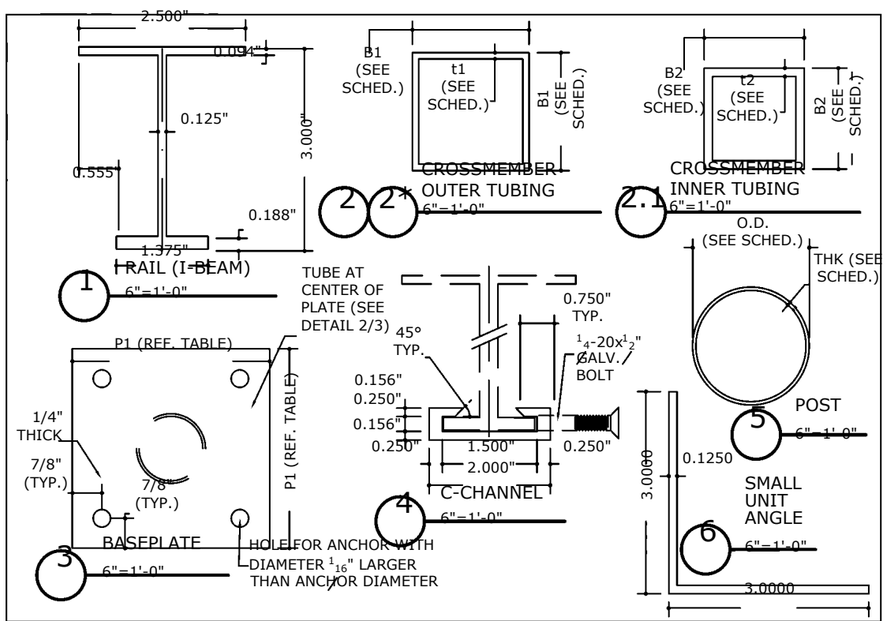

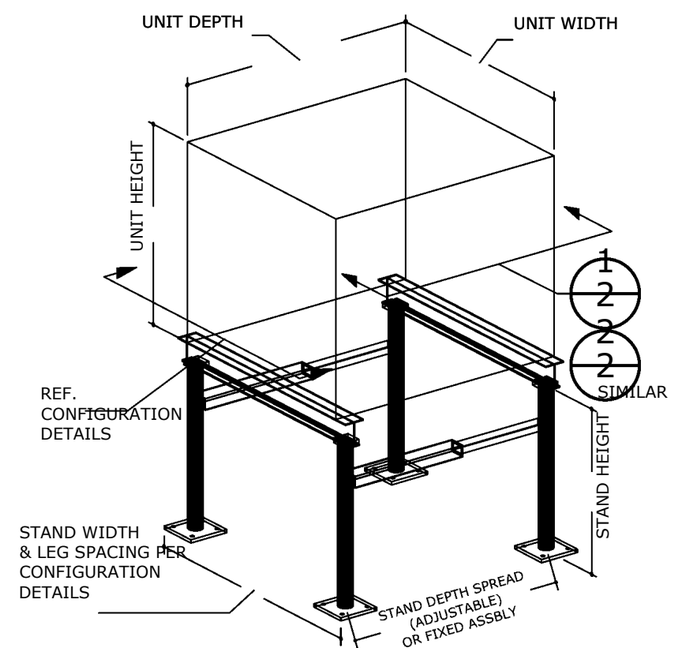

FRANK BENNARDO, P.E.
PE# 0046549 CA# 9885

FRANK L. BENNARDO LICENSE No PE0046549 STATE OF FLORIDA PROFESSIONAL ENGINEER

12/28/2023

DECEMBER 21, 2023

FL

FL 16921.1

ENGINEERING EXPRESS®
POSTAL ADDRESS:
2234 NORTH FEDERAL HWY #7664
BOCA RATON, FL 33431
ENGINEERINGEXPRESS.COM

PRECISION ALUMINUM PRODUCTS, INC.
1339 SW 1ST WAY
DEERFIELD BEACH, FL 33441
(954) 480-6919

ALUMINUM A/C STANDS
FLORIDA BUILDING CODE EIGHTH EDITION (2023)
FLORIDA STATEWIDE APPROVAL (FSA FL#16921.1)

REMARKS	DRWN	CHKD	DATE
PREV. SUBMITTAL (20-32768)	CSL	RWN	12/15/10
2023 FBC UPDATE & TECH. CHANGES	MRT	RWN	12/08/23

COPYRIGHT ENGINEERING EXPRESS®

23-69401

SCALE: NTS UNLESS NOTED

2 OF 18

12/21/2023 1:55 PM MILTON c:\users\milton\engineering express\production - documents\projects\23-\23-69401 2023 product fbc update fl16921\work\2023 fbc\drawings & cad\23-69401c - fl16921.1 - cad.dwg

FRANK BENNARDO, P.E.
PE# 0046549 CA# 9885

FRANK L. BENNARDO LICENSE No PE0046549 STATE OF FLORIDA PROFESSIONAL ENGINEER
12/28/2023

DECEMBER 21, 2023

FL

STAND COMPONENTS

STAND TYPE/COMPONENT SCHEDULE					
PART	DESCR.	STAND TYPE			
		STD	HD	XHD	FIXED-HD
2	OUTER TUBE SIZE (B1 x B1 x t1)	1.25" x 1.25" x 0.093"	1.50" x 1.50" x 0.093"	2.00" x 2.00" x 0.093"	N/A
2*	OUTER TUBE SIZE (B1 x B1 x t1)	N/A	N/A	N/A	2.00" x 2.00" x 0.093"
2.1	INNER TUBE SIZE (B2 x B2 x t2)	1.00" x 1.00" x 0.125"	1.25" x 1.25" x 0.125"	1.75" x 1.75" x 0.125"	N/A
4	POST SIZE (OD X THK)	1.5" x 0.090"	1.9" x 0.145"	1.9" x 0.200"	1.9" x 0.145"
5	BASEPLATE SIZE (P1 X P1)	4" X 4"	•4" X 4" UP TO 24" STAND HT •5" X 5" FOR 30" STAND HT	6" X 6"	5" X 5"

LEGEND:
- "HD"= HEAVY DUTY
- "STD" = STANDARD
- "XHD"= EXTRA HEAVY DUTY

2* SHALL BE UTILIZED FOR HD FIXED ASSEMBLY ONLY

MEAN UNIT HEIGHT & MAX FACE AREA CALCULATION DIRECTIVE:

THIS DIRECTIVE SHALL BE USED TO CALCULATE THE MEAN UNIT HEIGHT & MAXIMUM FACE AREA OF ANY MULTIPLE UNIT CONFIGURATION.

EXAMPLE CONFIGURATIONS:

†NOTE
- **UNIT WEIGHT MAY BE INCREASED TO 800# MAX FOR "XHD" STANDS**
- **MAX RAIL SPAN LENGTH IS LIMITED TO 5' FOR "XHD" STANDS**

2 UNITS:2 FRAME CONFIGURATION

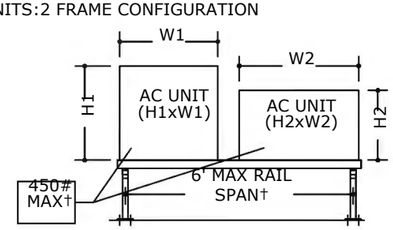

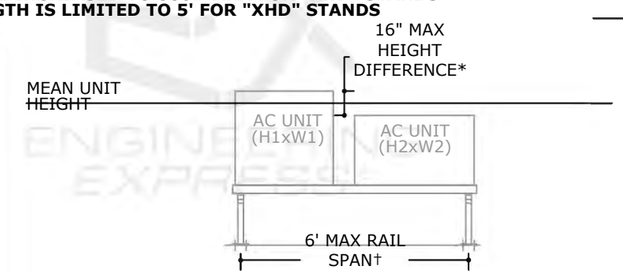

3 UNITS:3 FRAME CONFIGURATION

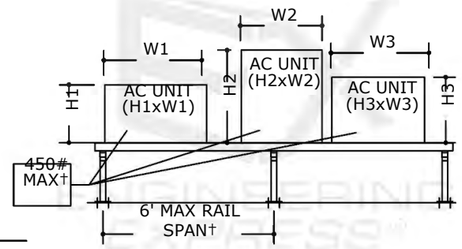

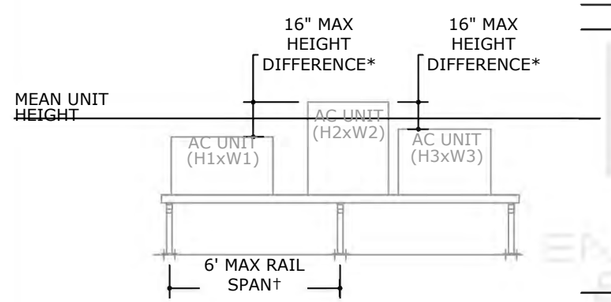

4 UNITS:4 FRAME CONFIGURATION

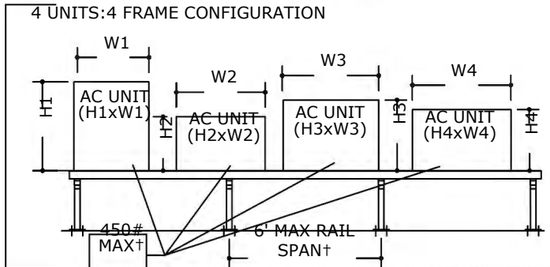

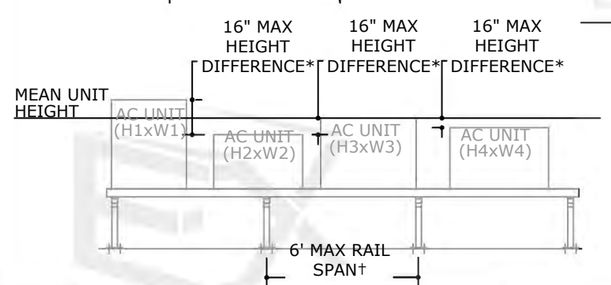

NOTE: THE NUMBER OF UNITS PER STAND CONFIGURATION MAY BE UNLIMITED PROVIDED THAT MULTIPLE UNITS CONFORM TO THE MEAN UNIT HEIGHT & MAXIMUM UNIT FACE AREA RESTRICTIONS UTILIZED IN THE DESIGN SCHEDULES.

*MAXIMUM ALLOWABLE HEIGHT DIFFERENCE BETWEEN ANY UNITS IN A MULTIPLE UNIT CONFIGURATION IS RESTRICTED TO 16" MAX.

FORMULAS USED FOR DETERMINING MEAN UNIT HEIGHT & MAXIMUM UNIT FACE AREA:

1. CALCULATE THE MEAN UNIT HEIGHT BY THE FOLLOWING EQUATION:
   - TWO UNITS: $\frac{H1+H2}{2}$
   - THREE UNITS: $\frac{H1+H2+H3}{3}$
   - FOUR UNITS: $\frac{H1+H2+H3+H4}{4}$
   - "n" UNITS: $\frac{H1+H2+H3+...Hn}{n}$
2. CALCULATE THE MAXIMUM UNIT FACE AREA BY THE FOLLOWING EQUATION:
   - TWO UNITS: (H1xW1)+(H2xW2)
   - THREE UNITS: (H1xW1)+(H2xW2)+(H3xW3)
   - FOUR UNITS: (H1xW1)+(H2xW2)+(H3xW3)+(H4xW4)
   - "n" UNITS: (H1xW1)+...(HnxWn)

EXAMPLE SCENARIO:

1. CONSIDER A FOUR UNIT CONFIGURATION WITH THE DIMENSIONS AS SHOWN BELOW.
2. CALCULATE THE MEAN UNIT HEIGHT.
   - FOUR UNITS: $\frac{H1+H2+H3+H4}{4} = \frac{20"+29"+22"+25"}{4} =$ 24" MEAN UNIT HEIGHT
3. CALCULATE THE MAXIMUM FACE AREA.
   - FOUR UNITS: (H1xW1)+(H2xW2)+(H3xW3)+(H4xW4) = (20"x21")+(29"x25")+(22"x22")+(25"x27")

= 2304 in²

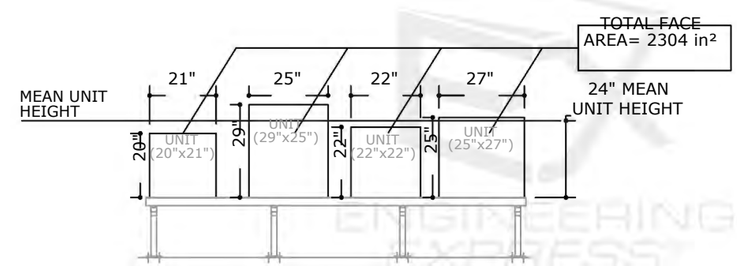

FL 16921.1

ENGINEERING EXPRESS®
POSTAL ADDRESS:
2234 NORTH FEDERAL HWY #7664
BOCA RATON, FL 33431
ENGINEERINGEXPRESS.COM

PRECISION ALUMINUM PRODUCTS, INC.
1339 SW 1ST WAY
DEERFIELD BEACH, FL 33441
(954) 480-6919

ALUMINUM A/C STANDS
FLORIDA BUILDING CODE EIGHTH EDITION (2023)
FLORIDA STATEWIDE APPROVAL (FSA FL#16921.1)

REMARKS	DRWN	CHKD	DATE
PREV. SUBMITTAL (20-32768)	CSL	RWN	12/15/20
2023 FBC UPDATE & TECH. CHANGES	MRT	RWN	12/08/23

COPYRIGHT ENGINEERING EXPRESS®

23-69401

SCALE: NTS UNLESS NOTED

12/21/2023 1:55 PM MILTON c:\users\milton\engineering express\production - documents\projects\23-69401 2023 fbc\drawings & cad\23-69401c - fl16921.1 - cad.dwg

"STD" STAND DESIGN SCHEDULES & STAND DIRECTIVE EXAMPLE

DESIGN SCHEDULES NOTES:

1. DESIGN SCHEDULES SHOWN HEREIN ARE REFERENCED TO ALLOWABLE STRENGTH DESIGN (ASD) METHODOLOGY.
2. EMPTY CELLS DENOTES CONDITIONS NOT ALLOWED TO USE.
3. MAXIMUM CALCULATED FACE AREA SHALL BE EQUAL TO OR LESS THAN THE MAXIMUM ALLOWABLE FACE AREA FOR EACH CONFIGURATION.
4. REFERENCE ANCHOR SCHEDULE FOR ANCHOR TYPES LISTED HEREIN.

FRANK BENNARDO, P.E.
PE# 0046549 CA# 9885

FRANK L. BENNARDO LICENSE No PE0046549 STATE OF FLORIDA PROFESSIONAL ENGINEER

12/28/2023

DECEMBER 21, 2023

FL

24" STAND DEPTH: MAX FACE AREA (2760in² - 11520in²), FRAME QUANTITY (5-8 FRAMES)

STAND CLEAR HEIGHT	MAX MEAN UNIT HEIGHT	MAX FACE AREA	UNIT TO FRAME RATIO																LOAD TRANSFER INFORMATION FOR USE WITH HOST STRUCTURE VERIFICATION ONLY			
			MAX FACE AREA : 8 FRAMES				MAX FACE AREA : 7 FRAMES				MAX FACE AREA : 6 FRAMES				MAX FACE AREA : 5 FRAMES							
			ANCHOR TYPE: 1 OR 4		ANCHORS TYPE: 2 OR 3		ANCHOR TYPE: 1 OR 4		ANCHORS TYPE: 2 OR 3		ANCHOR TYPE: 1 OR 4		ANCHORS TYPE: 2 OR 3		ANCHOR TYPE: 1 OR 4		ANCHORS TYPE: 2 OR 3					
			MAX ALLOWABLE LATERAL LOAD	MAX ALLOWABLE UPLIFT	MAX ALLOWABLE LATERAL LOAD	MAX ALLOWABLE UPLIFT	MAX ALLOWABLE LATERAL LOAD	MAX ALLOWABLE UPLIFT	MAX ALLOWABLE LATERAL LOAD	MAX ALLOWABLE UPLIFT	MAX ALLOWABLE LATERAL LOAD	MAX ALLOWABLE UPLIFT	MAX ALLOWABLE LATERAL LOAD	MAX ALLOWABLE UPLIFT	MAX ALLOWABLE LATERAL LOAD	MAX ALLOWABLE UPLIFT	MAX ALLOWABLE LATERAL LOAD	MAX ALLOWABLE UPLIFT	MAX. BASE MOMENT (M)	MAX. BASE SHEAR (V)	MAX. BASE UPLIFT (T)	MAX. BASE GRAVITY (C)
18 "	24 "	2760 in²	87.3 PSF	68.9 PSF	87.3 PSF	68.9 PSF	76.4 PSF	60.3 PSF	76.4 PSF	60.3 PSF	65.5 PSF	51.7 PSF	65.5 PSF	51.7 PSF	54.6 PSF	43.1 PSF	54.6 PSF	43.1 PSF	100.40 LB-FT	104.6 LB	356.4 LB	373.2 LB
24 "			68.4 PSF	54.0 PSF	68.4 PSF	54.0 PSF	59.8 PSF	47.2 PSF	59.8 PSF	47.2 PSF	51.3 PSF	40.5 PSF	51.3 PSF	40.5 PSF	42.7 PSF	33.7 PSF	42.7 PSF	33.7 PSF	100.40 LB-FT	81.9 LB	317.0 LB	362.5 LB
30 "			56.4 PSF	44.5 PSF	56.4 PSF	44.5 PSF	49.3 PSF	38.9 PSF	49.3 PSF	38.9 PSF	42.3 PSF	33.4 PSF	42.3 PSF	33.4 PSF	35.2 PSF	27.8 PSF	35.2 PSF	27.8 PSF	100.40 LB-FT	67.5 LB	292.7 LB	356.4 LB
36 "			48.0 PSF	37.9 PSF	48.0 PSF	37.9 PSF	42.0 PSF	33.2 PSF	42.0 PSF	33.2 PSF	36.0 PSF	28.4 PSF	36.0 PSF	28.4 PSF	30.0 PSF	23.7 PSF	30.0 PSF	23.7 PSF	100.40 LB-FT	57.6 LB	276.2 LB	352.5 LB
18 "	30 "	4650 in²	51.8 PSF	40.9 PSF	51.8 PSF	40.9 PSF	45.3 PSF	35.8 PSF	45.3 PSF	35.8 PSF	38.8 PSF	30.7 PSF	38.8 PSF	30.7 PSF	32.4 PSF	25.5 PSF	32.4 PSF	25.5 PSF	100.40 LB-FT	104.6 LB	382.5 LB	399.4 LB
24 "			40.6 PSF	32.0 PSF	40.6 PSF	32.0 PSF	35.5 PSF	28.0 PSF	35.5 PSF	28.0 PSF	30.4 PSF	24.0 PSF	30.4 PSF	24.0 PSF	25.3 PSF	20.0 PSF	25.3 PSF	20.0 PSF	100.40 LB-FT	81.9 LB	337.5 LB	383.0 LB
30 "			33.4 PSF	26.4 PSF	33.4 PSF	26.4 PSF	29.3 PSF	23.1 PSF	29.3 PSF	23.1 PSF	25.1 PSF	19.8 PSF	25.1 PSF	19.8 PSF	20.9 PSF	16.5 PSF	20.9 PSF	16.5 PSF	100.40 LB-FT	67.5 LB	309.6 LB	373.3 LB
36 "			28.5 PSF	22.5 PSF	28.5 PSF	22.5 PSF	24.9 PSF	19.7 PSF	24.9 PSF	19.7 PSF	21.4 PSF	16.9 PSF	21.4 PSF	16.9 PSF					100.40 LB-FT	57.6 LB	290.6 LB	344.4 LB
18 "	36 "	6300 in²	38.2 PSF	30.2 PSF	38.2 PSF	30.2 PSF	33.4 PSF	26.4 PSF	33.4 PSF	26.4 PSF	28.7 PSF	22.6 PSF	28.7 PSF	22.6 PSF	23.9 PSF	18.8 PSF	23.9 PSF	18.8 PSF	100.40 LB-FT	104.6 LB	408.7 LB	425.5 LB
24 "			29.9 PSF	23.6 PSF	29.9 PSF	23.6 PSF	26.2 PSF	20.7 PSF	26.2 PSF	20.7 PSF	22.4 PSF	17.7 PSF	22.4 PSF	17.7 PSF					100.40 LB-FT	81.9 LB	358.0 LB	381.0 LB
30 "			24.7 PSF	19.5 PSF	24.7 PSF	19.5 PSF	21.6 PSF	17.0 PSF	21.6 PSF	17.0 PSF									100.40 LB-FT	67.5 LB	326.5 LB	351.6 LB
36 "			21.0 PSF	16.6 PSF	21.0 PSF	16.6 PSF													100.40 LB-FT	57.6 LB	305.0 LB	330.7 LB
18 "	42 "	8400 in²	28.7 PSF	22.6 PSF	28.7 PSF	22.6 PSF	25.1 PSF	19.8 PSF	25.1 PSF	19.8 PSF	21.5 PSF	16.9 PSF	21.5 PSF	16.9 PSF					100.40 LB-FT	104.6 LB	434.9 LB	429.2 LB
24 "			22.4 PSF	17.7 PSF	22.4 PSF	17.7 PSF													100.40 LB-FT	81.9 LB	378.5 LB	373.4 LB
30 "																						
36 "																						
18 "	48 "	11520 in²	20.9 PSF	16.5 PSF	20.9 PSF	16.5 PSF													100.40 LB-FT	104.6 LB	461.0 LB	427.3 LB
24 "																						
30 "																						
36 "																						

DESIGN SCHEDULE NOTES:

1. MAXIMUM CALCULATED FACE AREA SHALL BE EQUAL TO OR LESS THAN THE MAXIMUM ALLOWABLE FACE AREA FOR EACH CONFIGURATION.
2. REFERENCE ANCHOR SCHEDULE FOR ANCHOR TYPES LISTED HEREIN.

STAND EXAMPLE

(THE FOLLOWING EXAMPLE ILLUSTRATES THE PROCEDURE USED TO DETERMINE THE MAXIMUM ALLOWABLE WIND PRESSURE & UPLIFT FOR ANY GIVEN MECHANICAL UNIT CONFIGURATION THAT CONFORMS TO THE DIMENSION RESTRICTIONS LISTED HEREIN. SEE SHEET 3 FOR MEAN UNIT HEIGHT & MAXIMUM FACE AREA CALCULATION DIRECTIVE. SEE SHEET 3 FOR COMPONENT SCHEDULE. SEE SHEET 17 FOR ANCHOR SCHEDULES.)

MECHANICAL UNIT/STAND CRITERIA:

CONSIDER THE INSTALLATION OF (4) MECHANICAL UNITS, (1)-20" TALL x 24" DEEP x 21" WIDE, (1)-29" TALL x 24" DEEP x 25" WIDE,(1)-22" TALL x 24" DEEP x 22" WIDE, (1)-25" TALL x 27" DEEP x 27" WIDE,[350 LB MAX WEIGHT] INSTALLED WITH THE FOLLOWING CRITERIA:

- NUMBER OF LEG FRAMES= (5) FRAMES
- STAND HEIGHT= 18" HEIGHT
- STAND DEPTH= 24" STAND DEPTH SPREAD
- HOST STRUCTURE TYPE= 3,000 PSI CONCRETE (AS VERIFIED BY OTHERS).

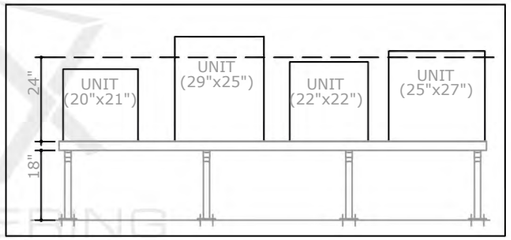

	PROCEDURE:	*RESULT:*
1	DETERMINE THE MEAN UNIT HEIGHT FOR THE GIVEN CONFIGURATION	SEE SHEET 3, CALCULATION DIRECTIVE STEP #1 FOR METHOD OF CALCULATING THE MEAN UNIT HEIGHT. FOR CLARIFICATION, THIS CONFIGURATION HAS BEEN WORKED OUT IN THE EXAMPLE SCENARIO. **(MEAN UNIT HEIGHT = 24 in)**
2	DETERMINE THE MAXIMUM FACE AREA FOR THE GIVEN CONFIGURATION	SEE SHEET 3, CALCULATION DIRECTIVE STEP #2 FOR METHOD OF CALCULATING THE MAXIMUM TOTAL UNIT FACE AREA. FOR CLARIFICATION, THIS CONFIGURATION HAS BEEN WORKED OUT IN THE EXAMPLE SCENARIO. **(MAXIMUM UNIT FACE AREA = 2304 in²)**
3	LOCATE DESIGN SCHEDULE THAT APPLIES TO THE GIVEN CONFIGURATION	SEE SHEET 4 FOR THE 24" STAND DEPTH WITH A MAXIMUM FACE AREA OF 2304 in².
4	DETERMINE THE MAXIMUM ALLOWABLE LATERAL & UPLIFT WIND LOADS	FOR A 2304 in² MAX TOTAL UNIT FACE AREA ON A 18" STAND HEIGHT WITH (5) SUPPORTING FRAMES, THE ALLOWABLE WIND LOADS ARE AS FOLLOWS: • ALLOWABLE LATERAL WIND LOAD: **54.6 PSF** • ALLOWABLE UPLIFT WIND LOAD: **43.1 PSF** (FROM TABLE ABOVE)
5	INSTALL STAND PER PERMISSIBLE ANCHOR TYPES AND VERIFY HOST STRUCTURE TYPE	UTILIZE ANCHOR TYPES FROM DESIGN SCHEDULE ASSOCIATED WITH THE ALLOWABLE WIND VALUES DETERMINED IN STEP 4. FOR THE TABLE LISTING, **ANCHOR TYPES 2 & 3 MAY BE APPLIED**. FOR THIS EXAMPLE UTILIZE ANCHOR TYPE 2 FOR CONCRETE HOST STRUCTURE TYPE. INSTALL STANDS PER ANCHOR SCHEDULE AND DETAILS AS ILLUSTRATED ON SHEETS 17 & 18.

CONCLUSION:

6	MAXIMUM ALLOWABLE LATERAL DESIGN PRESSURE=	= 54.6 PSF (FROM TABLE ABOVE)
	MAXIMUM ALLOWABLE UPLIFT DESIGN PRESSURE=	= 43.1 PSF
7	COMPARE TO SITE SPECIFIC DESIGN CONDITIONS	*COMPARE VALUES FROM STEP #6 TO THE SEPARATE SITE SPECIFIC REQUIRED DESIGN WIND PRESSURE PROVIDED BY A LICENSED ENGINEER OR REGISTERED ARCHITECT; NOT INCLUDED IN THIS CERTIFICATION. SITE-SPECIFIC PRESSURE REQUIREMENTS SHALL BE LESS THAN OR EQUAL TO THE LATERAL AND UPLIFT DESIGN PRESSURE ALLOWABLE CAPACITY VALUES LISTED.*

DESIGN SCHEDULE NOTES:

1. MAXIMUM CALCULATED FACE AREA SHALL BE EQUAL TO OR LESS THAN THE MAXIMUM ALLOWABLE FACE AREA FOR EACH CONFIGURATION.
2. REFERENCE ANCHOR SCHEDULE FOR ANCHOR TYPES LISTED HEREIN.

TABLE LEGEND:

DENOTES EXAMPLE VALUE FOR USE WITH COVER PAGE DIRECTIVE

FL 16921.1

ENGINEERING EXPRESS®
POSTAL ADDRESS:
2234 NORTH FEDERAL HWY #7664
BOCA RATON, FL 33431
ENGINEERINGEXPRESS.COM

PRECISION ALUMINUM PRODUCTS, INC.
1339 SW 1ST WAY
DEERFIELD BEACH, FL 33441
(954) 480-6919

ALUMINUM A/C STANDS
FLORIDA BUILDING CODE EIGHTH EDITION (2023)
FLORIDA STATEWIDE APPROVAL (FSA FL#16921.1)

REMARKS	DRWN	CHKD	DATE
PREV. SUBMITTAL (20-32768)	CSL	RWN	12/15/20
2023 FBC UPDATE & TECH. CHANGES	MRT	RWN	12/08/23

COPYRIGHT ENGINEERING EXPRESS®

23-69401

SCALE: NTS UNLESS NOTED

12/21/2023 1:55 PM MILTON c:\users\milton\engineering express\production - documents\projects\23-\23-69401 2023 product fbc update fl16921\work\2023 fbc\drawings & cad\23-69401c - fl16921.1 - cad.dwg

"STD" STAND DESIGN SCHEDULE CONTINUED

DESIGN SCHEDULES NOTES:

1. DESIGN SCHEDULES SHOWN HEREIN ARE REFERENCED TO ALLOWABLE STRENGTH DESIGN (ASD) METHODOLOGY.
2. EMPTY CELLS DENOTES CONDITIONS NOT ALLOWED TO USE.
3. MAXIMUM CALCULATED FACE AREA SHALL BE EQUAL TO OR LESS THAN THE MAXIMUM ALLOWABLE FACE AREA FOR EACH CONFIGURATION.
4. REFERENCE ANCHOR SCHEDULE FOR ANCHOR TYPES LISTED HEREIN.

FRANK BENNARDO, P.E.
PE# 0046549 CA# 9885

FRANK L. BENNARDO LICENSE No PE0046549 STATE OF FLORIDA PROFESSIONAL ENGINEER

12/28/2023

DECEMBER 21, 2023

FL

36" STAND DEPTH: MAX FACE AREA (2760in² - 11520in²), FRAME QUANTITY (5-8 FRAMES)

UNIT TO FRAME RATIO

STAND CLEAR HEIGHT	MAX MEAN UNIT HEIGHT	MAX FACE AREA	MAX FACE AREA : 8 FRAMES				MAX FACE AREA : 7 FRAMES				MAX FACE AREA : 6 FRAMES				MAX FACE AREA : 5 FRAMES				LOAD TRANSFER INFORMATION FOR USE WITH HOST STRUCTURE VERIFICATION ONLY			
			ANCHOR TYPE: 1 OR 4		ANCHORS TYPE: 2 OR 3		ANCHOR TYPE: 1 OR 4		ANCHORS TYPE: 2 OR 3		ANCHOR TYPE: 1 OR 4		ANCHORS TYPE: 2 OR 3		ANCHOR TYPE: 1 OR 4		ANCHORS TYPE: 2 OR 3		MAX. BASE MOMENT (M)	MAX. BASE SHEAR (V)	MAX. BASE UPLIFT (T)	MAX. BASE GRAVITY (C)
			MAX ALLOWABLE LATERAL LOAD	MAX ALLOWABLE UPLIFT	MAX ALLOWABLE LATERAL LOAD	MAX ALLOWABLE UPLIFT	MAX ALLOWABLE LATERAL LOAD	MAX ALLOWABLE UPLIFT	MAX ALLOWABLE LATERAL LOAD	MAX ALLOWABLE UPLIFT	MAX ALLOWABLE LATERAL LOAD	MAX ALLOWABLE UPLIFT	MAX ALLOWABLE LATERAL LOAD	MAX ALLOWABLE UPLIFT	MAX ALLOWABLE LATERAL LOAD	MAX ALLOWABLE UPLIFT	MAX ALLOWABLE LATERAL LOAD	MAX ALLOWABLE UPLIFT				
18 "	24 "	2760 in²	81.7 PSF	64.5 PSF	81.7 PSF	64.5 PSF	71.5 PSF	56.4 PSF	71.5 PSF	56.4 PSF	61.3 PSF	48.3 PSF	61.3 PSF	48.3 PSF	51.0 PSF	40.3 PSF	51.0 PSF	40.3 PSF	100.40 LB-FT	97.9 LB	242.7 LB	268.1 LB
24 "			64.3 PSF	50.7 PSF	64.3 PSF	50.7 PSF	56.2 PSF	44.4 PSF	56.2 PSF	44.4 PSF	48.2 PSF	38.0 PSF	48.2 PSF	38.0 PSF	40.1 PSF	31.7 PSF	40.1 PSF	31.7 PSF	100.40 LB-FT	77.0 LB	213.6 LB	265.4 LB
30 "			53.2 PSF	42.0 PSF	53.2 PSF	42.0 PSF	46.6 PSF	36.8 PSF	46.6 PSF	36.8 PSF	39.9 PSF	31.5 PSF	39.9 PSF	31.5 PSF	33.3 PSF	26.2 PSF	33.3 PSF	26.2 PSF	100.40 LB-FT	63.8 LB	195.9 LB	264.3 LB
36 "			45.6 PSF	36.0 PSF	45.6 PSF	36.0 PSF	39.9 PSF	31.5 PSF	39.9 PSF	31.5 PSF	34.2 PSF	27.0 PSF	34.2 PSF	27.0 PSF	28.5 PSF	22.5 PSF	28.5 PSF	22.5 PSF	100.40 LB-FT	54.6 LB	183.9 LB	263.9 LB
18 "	30 "	4650 in²	48.5 PSF	38.2 PSF	48.5 PSF	38.2 PSF	42.4 PSF	33.5 PSF	42.4 PSF	33.5 PSF	36.3 PSF	28.7 PSF	36.3 PSF	28.7 PSF	30.3 PSF	23.9 PSF	30.3 PSF	23.9 PSF	100.40 LB-FT	97.9 LB	259.0 LB	284.4 LB
24 "			38.1 PSF	30.1 PSF	38.1 PSF	30.1 PSF	33.4 PSF	26.3 PSF	33.4 PSF	26.3 PSF	28.6 PSF	22.6 PSF	28.6 PSF	22.6 PSF	23.8 PSF	18.8 PSF	23.8 PSF	18.8 PSF	100.40 LB-FT	77.0 LB	226.5 LB	278.2 LB
30 "			31.6 PSF	24.9 PSF	31.6 PSF	24.9 PSF	27.6 PSF	21.8 PSF	27.6 PSF	21.8 PSF	23.7 PSF	18.7 PSF	23.7 PSF	18.7 PSF					100.40 LB-FT	63.8 LB	206.5 LB	252.4 LB
36 "			27.0 PSF	21.3 PSF	27.0 PSF	21.3 PSF	23.6 PSF	18.7 PSF	23.6 PSF	18.7 PSF	20.3 PSF	16.0 PSF	20.3 PSF	16.0 PSF					100.40 LB-FT	54.6 LB	193.0 LB	250.5 LB
18 "	36 "	6300 in²	35.8 PSF	28.2 PSF	35.8 PSF	28.2 PSF	31.3 PSF	24.7 PSF	31.3 PSF	24.7 PSF	26.8 PSF	21.2 PSF	26.8 PSF	21.2 PSF	22.3 PSF	17.6 PSF	22.3 PSF	17.6 PSF	100.40 LB-FT	97.9 LB	275.3 LB	300.7 LB
24 "			28.1 PSF	22.2 PSF	28.1 PSF	22.2 PSF	24.6 PSF	19.4 PSF	24.6 PSF	19.4 PSF	21.1 PSF	16.6 PSF	21.1 PSF	16.6 PSF					100.40 LB-FT	77.0 LB	239.3 LB	268.6 LB
30 "			23.3 PSF	18.4 PSF	23.3 PSF	18.4 PSF	20.4 PSF	16.1 PSF	20.4 PSF	16.1 PSF									100.40 LB-FT	63.8 LB	217.2 LB	247.0 LB
36 "																						
18 "	42 "	8400 in²	26.8 PSF	21.2 PSF	26.8 PSF	21.2 PSF	23.4 PSF	18.5 PSF	23.4 PSF	18.5 PSF	20.1 PSF	15.9 PSF	20.1 PSF	15.9 PSF					100.40 LB-FT	97.9 LB	291.6 LB	294.5 LB
24 "			21.1 PSF	16.6 PSF	21.1 PSF	16.6 PSF													100.40 LB-FT	77.0 LB	252.1 LB	253.3 LB
30 "																						
36 "																						
18 "	48 "	11520 in²																				
24 "																						
30 "																						
36 "																						

24" STAND DEPTH: MAX FACE AREA (2208in² - 9216in²), FRAME QUANTITY (4-7 FRAMES)

UNIT TO FRAME RATIO

STAND CLEAR HEIGHT	MAX MEAN UNIT HEIGHT	MAX FACE AREA	MAX FACE AREA : 7 FRAMES				MAX FACE AREA : 6 FRAMES				MAX FACE AREA : 5 FRAMES				MAX FACE AREA : 4 FRAMES				LOAD TRANSFER INFORMATION FOR USE WITH HOST STRUCTURE VERIFICATION ONLY			
			ANCHOR TYPE: 1 OR 4		ANCHORS TYPE: 2 OR 3		ANCHOR TYPE: 1 OR 4		ANCHORS TYPE: 2 OR 3		ANCHOR TYPE: 1 OR 4		ANCHORS TYPE: 2 OR 3		ANCHOR TYPE: 1 OR 4		ANCHORS TYPE: 2 OR 3		MAX. BASE MOMENT (M)	MAX. BASE SHEAR (V)	MAX. BASE UPLIFT (T)	MAX. BASE GRAVITY (C)
			MAX ALLOWABLE LATERAL LOAD	MAX ALLOWABLE UPLIFT	MAX ALLOWABLE LATERAL LOAD	MAX ALLOWABLE UPLIFT	MAX ALLOWABLE LATERAL LOAD	MAX ALLOWABLE UPLIFT	MAX ALLOWABLE LATERAL LOAD	MAX ALLOWABLE UPLIFT	MAX ALLOWABLE LATERAL LOAD	MAX ALLOWABLE UPLIFT	MAX ALLOWABLE LATERAL LOAD	MAX ALLOWABLE UPLIFT	MAX ALLOWABLE LATERAL LOAD	MAX ALLOWABLE UPLIFT	MAX ALLOWABLE LATERAL LOAD	MAX ALLOWABLE UPLIFT				
18 "	24 "	2208 in²	95.5 PSF	75.4 PSF	95.5 PSF	75.4 PSF	81.9 PSF	64.6 PSF	81.9 PSF	64.6 PSF	68.2 PSF	53.8 PSF	68.2 PSF	53.8 PSF	54.6 PSF	43.1 PSF	54.6 PSF	43.1 PSF	100.40 LB-FT	104.6 LB	357.6 LB	373.2 LB
24 "			74.8 PSF	59.0 PSF	74.8 PSF	59.0 PSF	64.1 PSF	50.6 PSF	64.1 PSF	50.6 PSF	53.4 PSF	42.2 PSF	53.4 PSF	42.2 PSF	42.7 PSF	33.7 PSF	42.7 PSF	33.7 PSF	100.40 LB-FT	81.9 LB	318.2 LB	362.5 LB
30 "			61.7 PSF	48.7 PSF	61.7 PSF	48.7 PSF	52.8 PSF	41.7 PSF	52.8 PSF	41.7 PSF	44.0 PSF	34.8 PSF	44.0 PSF	34.8 PSF	35.2 PSF	27.8 PSF	35.2 PSF	27.8 PSF	100.40 LB-FT	67.5 LB	293.9 LB	356.4 LB
36 "			52.5 PSF	41.5 PSF	52.5 PSF	41.5 PSF	45.0 PSF	35.5 PSF	45.0 PSF	35.5 PSF	37.5 PSF	29.6 PSF	37.5 PSF	29.6 PSF	30.0 PSF	23.7 PSF	30.0 PSF	23.7 PSF	100.40 LB-FT	57.6 LB	277.4 LB	352.5 LB
18 "	30 "	3720 in²	56.7 PSF	44.7 PSF	56.7 PSF	44.7 PSF	48.6 PSF	38.3 PSF	48.6 PSF	38.3 PSF	40.5 PSF	31.9 PSF	40.5 PSF	31.9 PSF	32.4 PSF	25.5 PSF	32.4 PSF	25.5 PSF	100.40 LB-FT	104.6 LB	383.7 LB	399.4 LB
24 "			44.4 PSF	35.0 PSF	44.4 PSF	35.0 PSF	38.0 PSF	30.0 PSF	38.0 PSF	30.0 PSF	31.7 PSF	25.0 PSF	31.7 PSF	25.0 PSF	25.3 PSF	20.0 PSF	25.3 PSF	20.0 PSF	100.40 LB-FT	81.9 LB	338.7 LB	383.0 LB
30 "			36.6 PSF	28.9 PSF	36.6 PSF	28.9 PSF	31.3 PSF	24.7 PSF	31.3 PSF	24.7 PSF	26.1 PSF	20.6 PSF	26.1 PSF	20.6 PSF	20.9 PSF	16.5 PSF	20.9 PSF	16.5 PSF	100.40 LB-FT	67.5 LB	310.8 LB	373.3 LB
36 "			31.2 PSF	24.6 PSF	31.2 PSF	24.6 PSF	26.7 PSF	21.1 PSF	26.7 PSF	21.1 PSF	22.2 PSF	17.6 PSF	22.2 PSF	17.6 PSF					100.40 LB-FT	57.6 LB	291.8 LB	339.9 LB
18 "	36 "	5040 in²	41.8 PSF	33.0 PSF	41.8 PSF	33.0 PSF	35.8 PSF	28.3 PSF	35.8 PSF	28.3 PSF	29.9 PSF	23.6 PSF	29.9 PSF	23.6 PSF	23.9 PSF	18.8 PSF	23.9 PSF	18.8 PSF	100.40 LB-FT	104.6 LB	409.9 LB	425.5 LB
24 "			32.7 PSF	25.8 PSF	32.7 PSF	25.8 PSF	28.1 PSF	22.1 PSF	28.1 PSF	22.1 PSF	23.4 PSF	18.4 PSF	23.4 PSF	18.4 PSF					100.40 LB-FT	81.9 LB	359.2 LB	376.5 LB
30 "			27.0 PSF	21.3 PSF	27.0 PSF	21.3 PSF	23.1 PSF	18.2 PSF	23.1 PSF	18.2 PSF									100.40 LB-FT	67.5 LB	327.7 LB	345.2 LB
36 "			23.0 PSF	18.1 PSF	23.0 PSF	18.1 PSF													100.40 LB-FT	57.6 LB	306.2 LB	323.4 LB
18 "	42 "	6720 in²	31.4 PSF	24.7 PSF	31.4 PSF	24.7 PSF	26.9 PSF	21.2 PSF	26.9 PSF	21.2 PSF	22.4 PSF	17.7 PSF	22.4 PSF	17.7 PSF					100.40 LB-FT	104.6 LB	436.1 LB	424.7 LB
24 "			24.5 PSF	19.4 PSF	24.5 PSF	19.4 PSF	21.0 PSF	16.6 PSF	21.0 PSF	16.6 PSF									100.40 LB-FT	81.9 LB	379.7 LB	379.0 LB
30 "			20.2 PSF	16.0 PSF	20.2 PSF	16.0 PSF													100.40 LB-FT	67.5 LB	344.6 LB	349.2 LB
36 "																						
18 "	48 "	9216 in²	22.8 PSF	18.0 PSF	22.8 PSF	18.0 PSF													100.40 LB-FT	104.6 LB	462.2 LB	420.0 LB
24 "																						
30 "																						
36 "																						

36" STAND DEPTH: MAX FACE AREA (2208in² - 9216in²), FRAME QUANTITY (4-7 FRAMES)

UNIT TO FRAME RATIO

STAND CLEAR HEIGHT	MAX MEAN UNIT HEIGHT	MAX FACE AREA	MAX FACE AREA : 7 FRAMES				MAX FACE AREA : 6 FRAMES				MAX FACE AREA : 5 FRAMES				MAX FACE AREA : 4 FRAMES				LOAD TRANSFER INFORMATION FOR USE WITH HOST STRUCTURE VERIFICATION ONLY			
			ANCHOR TYPE: 1 OR 4		ANCHORS TYPE: 2 OR 3		ANCHOR TYPE: 1 OR 4		ANCHORS TYPE: 2 OR 3		ANCHOR TYPE: 1 OR 4		ANCHORS TYPE: 2 OR 3		ANCHOR TYPE: 1 OR 4		ANCHORS TYPE: 2 OR 3		MAX. BASE MOMENT (M)	MAX. BASE SHEAR (V)	MAX. BASE UPLIFT (T)	MAX. BASE GRAVITY (C)
			MAX ALLOWABLE LATERAL LOAD	MAX ALLOWABLE UPLIFT	MAX ALLOWABLE LATERAL LOAD	MAX ALLOWABLE UPLIFT	MAX ALLOWABLE LATERAL LOAD	MAX ALLOWABLE UPLIFT	MAX ALLOWABLE LATERAL LOAD	MAX ALLOWABLE UPLIFT	MAX ALLOWABLE LATERAL LOAD	MAX ALLOWABLE UPLIFT	MAX ALLOWABLE LATERAL LOAD	MAX ALLOWABLE UPLIFT	MAX ALLOWABLE LATERAL LOAD	MAX ALLOWABLE UPLIFT	MAX ALLOWABLE LATERAL LOAD	MAX ALLOWABLE UPLIFT				
18 "	24 "	2208 in²	89.3 PSF	70.5 PSF	89.3 PSF	70.5 PSF	76.6 PSF	60.4 PSF	76.6 PSF	60.4 PSF	63.8 PSF	50.4 PSF	63.8 PSF	50.4 PSF	51.0 PSF	40.3 PSF	51.0 PSF	40.3 PSF	100.40 LB-FT	97.9 LB	243.9 LB	268.1 LB
24 "			70.3 PSF	55.5 PSF	70.3 PSF	55.5 PSF	60.2 PSF	47.5 PSF	60.2 PSF	47.5 PSF	50.2 PSF	39.6 PSF	50.2 PSF	39.6 PSF	40.1 PSF	31.7 PSF	40.1 PSF	31.7 PSF	100.40 LB-FT	77.0 LB	214.8 LB	265.4 LB
30 "			58.2 PSF	46.0 PSF	58.2 PSF	46.0 PSF	49.9 PSF	39.4 PSF	49.9 PSF	39.4 PSF	41.6 PSF	32.8 PSF	41.6 PSF	32.8 PSF	33.3 PSF	26.2 PSF	33.3 PSF	26.2 PSF	100.40 LB-FT	63.8 LB	197.1 LB	264.3 LB
36 "			49.8 PSF	39.3 PSF	49.8 PSF	39.3 PSF	42.7 PSF	33.7 PSF	42.7 PSF	33.7 PSF	35.6 PSF	28.1 PSF	35.6 PSF	28.1 PSF	28.5 PSF	22.5 PSF	28.5 PSF	22.5 PSF	100.40 LB-FT	54.6 LB	185.1 LB	263.9 LB
18 "	30 "	3720 in²	53.0 PSF	41.8 PSF	53.0 PSF	41.8 PSF	45.4 PSF	35.9 PSF	45.4 PSF	35.9 PSF	37.9 PSF	29.9 PSF	37.9 PSF	29.9 PSF	30.3 PSF	23.9 PSF	30.3 PSF	23.9 PSF	100.40 LB-FT	97.9 LB	260.2 LB	284.4 LB
24 "			41.7 PSF	32.9 PSF	41.7 PSF	32.9 PSF	35.7 PSF	28.2 PSF	35.7 PSF	28.2 PSF	29.8 PSF	23.5 PSF	29.8 PSF	23.5 PSF	23.8 PSF	18.8 PSF	23.8 PSF	18.8 PSF	100.40 LB-FT	77.0 LB	227.7 LB	278.2 LB
30 "			34.5 PSF	27.3 PSF	34.5 PSF	27.3 PSF	29.6 PSF	23.4 PSF	29.6 PSF	23.4 PSF	24.7 PSF	19.5 PSF	24.7 PSF	19.5 PSF					100.40 LB-FT	63.8 LB	207.7 LB	247.9 LB
36 "			29.6 PSF	23.3 PSF	29.6 PSF	23.3 PSF	25.3 PSF	20.0 PSF	25.3 PSF	20.0 PSF	21.1 PSF	16.7 PSF	21.1 PSF	16.7 PSF					100.40 LB-FT	54.6 LB	194.2 LB	246.0 LB
18 "	36 "	5040 in²	39.1 PSF	30.9 PSF	39.1 PSF	30.9 PSF	33.5 PSF	26.5 PSF	33.5 PSF	26.5 PSF	27.9 PSF	22.0 PSF	27.9 PSF	22.0 PSF	22.3 PSF	17.6 PSF	22.3 PSF	17.6 PSF	100.40 LB-FT	97.9 LB	276.5 LB	300.7 LB
24 "			30.8 PSF	24.3 PSF	30.8 PSF	24.3 PSF	26.4 PSF	20.8 PSF	26.4 PSF	20.8 PSF	22.0 PSF	17.3 PSF	22.0 PSF	17.3 PSF					100.40 LB-FT	77.0 LB	240.5 LB	264.1 LB
30 "			25.5 PSF	20.1 PSF	25.5 PSF	20.1 PSF	21.8 PSF	17.2 PSF	21.8 PSF	17.2 PSF									100.40 LB-FT	63.8 LB	218.4 LB	240.6 LB
36 "			21.8 PSF	17.2 PSF	21.8 PSF	17.2 PSF													100.40 LB-FT	54.6 LB	203.3 LB	224.3 LB
18 "	42 "	6720 in²	29.3 PSF	23.1 PSF	29.3 PSF	23.1 PSF	25.1 PSF	19.8 PSF	25.1 PSF	19.8 PSF	20.9 PSF	16.5 PSF	20.9 PSF	16.5 PSF					100.40 LB-FT	97.9 LB	292.8 LB	290.0 LB
24 "			23.1 PSF	18.2 PSF	23.1 PSF	18.2 PSF													100.40 LB-FT	77.0 LB	253.3 LB	246.0 LB
30 "																						
36 "																						
18 "	48 "	9216 in²	21.4 PSF	16.9 PSF	21.4 PSF	16.9 PSF													100.40 LB-FT	97.9 LB	309.2 LB	275.5 LB
24 "																						
30 "																						
36 "																						

FL 16921.1

ENGINEERING EXPRESS®
POSTAL ADDRESS:
2234 NORTH FEDERAL HWY #7664
BOCA RATON, FL 33431
ENGINEERINGEXPRESS.COM

PRECISION ALUMINUM PRODUCTS, INC.
1339 SW 1ST WAY
DEERFIELD BEACH, FL 33441
(954) 480-6919

ALUMINUM A/C STANDS
FLORIDA BUILDING CODE EIGHTH EDITION (2023)
FLORIDA STATEWIDE APPROVAL (FSA FL# 16921.1)

REMARKS	DRWN	CHKD	DATE
PREV. SUBMITTAL (20-32768)	CSL	RWN	12/15/20
2023 FBC UPDATE & TECH. CHANGES	MRT	RWN	12/08/23

COPYRIGHT ENGINEERING EXPRESS®

23-69401

SCALE: NTS UNLESS NOTED

12/21/2023 1:55 PM MILTON c:\users\milton\engineering express\production - documents\projects\23-\23-69401 2023 product fbc update fl16921\work\2023 fbc\drawings & cad\23-69401c - fl16921.1 - cad.dwg

"STD" STAND DESIGN SCHEDULE CONTINUED

DESIGN SCHEDULES NOTES:

1. DESIGN SCHEDULES SHOWN HEREIN ARE REFERENCED TO ALLOWABLE STRENGTH DESIGN (ASD) METHODOLOGY.
2. EMPTY CELLS DENOTES CONDITIONS NOT ALLOWED TO USE.
3. MAXIMUM CALCULATED FACE AREA SHALL BE EQUAL TO OR LESS THAN THE MAXIMUM ALLOWABLE FACE AREA FOR EACH CONFIGURATION.
4. REFERENCE ANCHOR SCHEDULE FOR ANCHOR TYPES LISTED HEREIN.

24" STAND DEPTH: MAX FACE AREA (1656in² - 6912in²), FRAME QUANTITY (3-6 FRAMES)

STAND CLEAR HEIGHT	MAX MEAN UNIT HEIGHT	MAX FACE AREA	UNIT TO FRAME RATIO: MAX FACE AREA : 6 FRAMES — ANCHOR TYPE: 1 OR 4 — MAX ALLOWABLE LATERAL LOAD	MAX ALLOWABLE UPLIFT	ANCHORS TYPE: 2 OR 3 — MAX ALLOWABLE LATERAL LOAD	MAX ALLOWABLE UPLIFT	MAX FACE AREA : 5 FRAMES — ANCHOR TYPE: 1 OR 4 — MAX ALLOWABLE LATERAL LOAD	MAX ALLOWABLE UPLIFT	ANCHORS TYPE: 2 OR 3 — MAX ALLOWABLE LATERAL LOAD	MAX ALLOWABLE UPLIFT	MAX FACE AREA : 4 FRAMES — ANCHOR TYPE: 1 OR 4 — MAX ALLOWABLE LATERAL LOAD	MAX ALLOWABLE UPLIFT	ANCHORS TYPE: 2 OR 3 — MAX ALLOWABLE LATERAL LOAD	MAX ALLOWABLE UPLIFT	MAX FACE AREA : 3 FRAMES — ANCHOR TYPE: 1 OR 4 — MAX ALLOWABLE LATERAL LOAD	MAX ALLOWABLE UPLIFT	ANCHORS TYPE: 2 OR 3 — MAX ALLOWABLE LATERAL LOAD	MAX ALLOWABLE UPLIFT	LOAD TRANSFER INFORMATION FOR USE WITH HOST STRUCTURE VERIFICATION ONLY — MAX. BASE MOMENT (M)	MAX. BASE SHEAR (V)	MAX. BASE UPLIFT (T)	MAX. BASE GRAVITY (C)
18 "	24 "	1656 in²	109.2 PSF	86.2 PSF	109.2 PSF	86.2 PSF	91.0 PSF	71.8 PSF	91.0 PSF	71.8 PSF	72.8 PSF	57.4 PSF	72.8 PSF	57.4 PSF	54.6 PSF	43.1 PSF	54.6 PSF	43.1 PSF	100.40 LB-FT	104.6 LB	359.2 LB	373.2 LB
24 "			85.5 PSF	67.5 PSF	85.5 PSF	67.5 PSF	71.2 PSF	56.2 PSF	71.2 PSF	56.2 PSF	57.0 PSF	45.0 PSF	57.0 PSF	45.0 PSF	42.7 PSF	33.7 PSF	42.7 PSF	33.7 PSF	100.40 LB-FT	81.9 LB	319.8 LB	362.5 LB
30 "			70.5 PSF	55.6 PSF	70.5 PSF	55.6 PSF	58.7 PSF	46.4 PSF	58.7 PSF	46.4 PSF	47.0 PSF	37.1 PSF	47.0 PSF	37.1 PSF	35.2 PSF	27.8 PSF	35.2 PSF	27.8 PSF	100.40 LB-FT	67.5 LB	295.5 LB	356.4 LB
36 "			60.1 PSF	47.4 PSF	60.1 PSF	47.4 PSF	50.0 PSF	39.5 PSF	50.0 PSF	39.5 PSF	40.0 PSF	31.6 PSF	40.0 PSF	31.6 PSF	30.0 PSF	23.7 PSF	30.0 PSF	23.7 PSF	100.40 LB-FT	57.6 LB	279.0 LB	352.5 LB
18 "	30 "	2790 in²	64.8 PSF	51.1 PSF	64.8 PSF	51.1 PSF	54.0 PSF	42.6 PSF	54.0 PSF	42.6 PSF	43.2 PSF	34.1 PSF	43.2 PSF	34.1 PSF	32.4 PSF	25.5 PSF	32.4 PSF	25.5 PSF	100.40 LB-FT	104.6 LB	385.3 LB	399.4 LB
24 "			50.7 PSF	40.0 PSF	50.7 PSF	40.0 PSF	42.3 PSF	33.4 PSF	42.3 PSF	33.4 PSF	33.8 PSF	26.7 PSF	33.8 PSF	26.7 PSF	25.3 PSF	20.0 PSF	25.3 PSF	20.0 PSF	100.40 LB-FT	81.9 LB	340.3 LB	383.0 LB
30 "			41.8 PSF	33.0 PSF	41.8 PSF	33.0 PSF	34.8 PSF	27.5 PSF	34.8 PSF	27.5 PSF	27.9 PSF	22.0 PSF	27.9 PSF	22.0 PSF	20.9 PSF	16.5 PSF	20.9 PSF	16.5 PSF	100.40 LB-FT	67.5 LB	312.4 LB	373.3 LB
36 "			35.6 PSF	28.1 PSF	35.6 PSF	28.1 PSF	29.7 PSF	23.4 PSF	29.7 PSF	23.4 PSF	23.7 PSF	18.7 PSF	23.7 PSF	18.7 PSF					100.40 LB-FT	57.6 LB	293.4 LB	333.1 LB
18 "	36 "	3780 in²	47.8 PSF	37.7 PSF	47.8 PSF	37.7 PSF	39.8 PSF	31.4 PSF	39.8 PSF	31.4 PSF	31.8 PSF	25.1 PSF	31.8 PSF	25.1 PSF	23.9 PSF	18.8 PSF	23.9 PSF	18.8 PSF	100.40 LB-FT	104.6 LB	411.5 LB	425.5 LB
24 "			37.4 PSF	29.5 PSF	37.4 PSF	29.5 PSF	31.2 PSF	24.6 PSF	31.2 PSF	24.6 PSF	24.9 PSF	19.7 PSF	24.9 PSF	19.7 PSF					100.40 LB-FT	81.9 LB	360.8 LB	369.8 LB
30 "			30.8 PSF	24.3 PSF	30.8 PSF	24.3 PSF	25.7 PSF	20.3 PSF	25.7 PSF	20.3 PSF	20.5 PSF	16.2 PSF	20.5 PSF	16.2 PSF					100.40 LB-FT	67.5 LB	329.3 LB	356.5 LB
36 "			26.3 PSF	20.7 PSF	26.3 PSF	20.7 PSF	21.9 PSF	17.3 PSF	21.9 PSF	17.3 PSF									100.40 LB-FT	57.6 LB	307.8 LB	327.3 LB
18 "	42 "	5040 in²	35.8 PSF	28.3 PSF	35.8 PSF	28.3 PSF	29.9 PSF	23.6 PSF	29.9 PSF	23.6 PSF	23.9 PSF	18.8 PSF	23.9 PSF	18.8 PSF					100.40 LB-FT	104.6 LB	437.7 LB	418.0 LB
24 "			28.1 PSF	22.1 PSF	28.1 PSF	22.1 PSF	23.4 PSF	18.4 PSF	23.4 PSF	18.4 PSF									100.40 LB-FT	81.9 LB	381.3 LB	370.0 LB
30 "			23.1 PSF	18.2 PSF	23.1 PSF	18.2 PSF													100.40 LB-FT	67.5 LB	346.2 LB	339.6 LB
36 "																						
18 "	48 "	6912 in²	26.1 PSF	20.6 PSF	26.1 PSF	20.6 PSF	21.8 PSF	17.2 PSF	21.8 PSF	17.2 PSF									100.40 LB-FT	104.6 LB	463.9 LB	423.9 LB
24 "			20.4 PSF	16.1 PSF	20.4 PSF	16.1 PSF													100.40 LB-FT	81.9 LB	401.8 LB	377.0 LB
30 "																						
36 "																						

36" STAND DEPTH: MAX FACE AREA (1656in² - 6912in²), FRAME QUANTITY (3-6 FRAMES)

STAND CLEAR HEIGHT	MAX MEAN UNIT HEIGHT	MAX FACE AREA	UNIT TO FRAME RATIO: MAX FACE AREA : 6 FRAMES — ANCHOR TYPE: 1 OR 4 — MAX ALLOWABLE LATERAL LOAD	MAX ALLOWABLE UPLIFT	ANCHORS TYPE: 2 OR 3 — MAX ALLOWABLE LATERAL LOAD	MAX ALLOWABLE UPLIFT	MAX FACE AREA : 5 FRAMES — ANCHOR TYPE: 1 OR 4 — MAX ALLOWABLE LATERAL LOAD	MAX ALLOWABLE UPLIFT	ANCHORS TYPE: 2 OR 3 — MAX ALLOWABLE LATERAL LOAD	MAX ALLOWABLE UPLIFT	MAX FACE AREA : 4 FRAMES — ANCHOR TYPE: 1 OR 4 — MAX ALLOWABLE LATERAL LOAD	MAX ALLOWABLE UPLIFT	ANCHORS TYPE: 2 OR 3 — MAX ALLOWABLE LATERAL LOAD	MAX ALLOWABLE UPLIFT	MAX FACE AREA : 3 FRAMES — ANCHOR TYPE: 1 OR 4 — MAX ALLOWABLE LATERAL LOAD	MAX ALLOWABLE UPLIFT	ANCHORS TYPE: 2 OR 3 — MAX ALLOWABLE LATERAL LOAD	MAX ALLOWABLE UPLIFT	LOAD TRANSFER INFORMATION FOR USE WITH HOST STRUCTURE VERIFICATION ONLY — MAX. BASE MOMENT (M)	MAX. BASE SHEAR (V)	MAX. BASE UPLIFT (T)	MAX. BASE GRAVITY (C)
18 "	24 "	1656 in²	102.1 PSF	80.6 PSF	102.1 PSF	80.6 PSF	85.1 PSF	67.2 PSF	85.1 PSF	67.2 PSF	68.1 PSF	53.7 PSF	68.1 PSF	53.7 PSF	51.0 PSF	40.3 PSF	51.0 PSF	40.3 PSF	100.40 LB-FT	97.9 LB	245.5 LB	268.1 LB
24 "			80.3 PSF	63.4 PSF	80.3 PSF	63.4 PSF	66.9 PSF	52.8 PSF	66.9 PSF	52.8 PSF	53.5 PSF	42.3 PSF	53.5 PSF	42.3 PSF	40.1 PSF	31.7 PSF	40.1 PSF	31.7 PSF	100.40 LB-FT	77.0 LB	216.4 LB	265.4 LB
30 "			66.6 PSF	52.5 PSF	66.6 PSF	52.5 PSF	55.5 PSF	43.8 PSF	55.5 PSF	43.8 PSF	44.4 PSF	35.0 PSF	44.4 PSF	35.0 PSF	33.3 PSF	26.2 PSF	33.3 PSF	26.2 PSF	100.40 LB-FT	63.8 LB	198.7 LB	264.3 LB
36 "			57.0 PSF	45.0 PSF	57.0 PSF	45.0 PSF	47.5 PSF	37.5 PSF	47.5 PSF	37.5 PSF	38.0 PSF	30.0 PSF	38.0 PSF	30.0 PSF	28.5 PSF	22.5 PSF	28.5 PSF	22.5 PSF	100.40 LB-FT	54.6 LB	186.7 LB	263.9 LB
18 "	30 "	2790 in²	60.6 PSF	47.8 PSF	60.6 PSF	47.8 PSF	50.5 PSF	39.8 PSF	50.5 PSF	39.8 PSF	40.4 PSF	31.9 PSF	40.4 PSF	31.9 PSF	30.3 PSF	23.9 PSF	30.3 PSF	23.9 PSF	100.40 LB-FT	97.9 LB	261.8 LB	284.4 LB
24 "			47.7 PSF	37.6 PSF	47.7 PSF	37.6 PSF	39.7 PSF	31.3 PSF	39.7 PSF	31.3 PSF	31.8 PSF	25.1 PSF	31.8 PSF	25.1 PSF	23.8 PSF	18.8 PSF	23.8 PSF	18.8 PSF	100.40 LB-FT	77.0 LB	229.3 LB	278.2 LB
30 "			39.5 PSF	31.2 PSF	39.5 PSF	31.2 PSF	32.9 PSF	26.0 PSF	32.9 PSF	26.0 PSF	26.3 PSF	20.8 PSF	26.3 PSF	20.8 PSF					100.40 LB-FT	63.8 LB	209.3 LB	241.2 LB
36 "			33.8 PSF	26.7 PSF	33.8 PSF	26.7 PSF	28.2 PSF	22.2 PSF	28.2 PSF	22.2 PSF	22.5 PSF	17.8 PSF	22.5 PSF	17.8 PSF					100.40 LB-FT	54.6 LB	195.8 LB	239.3 LB
18 "	36 "	3780 in²	44.7 PSF	35.3 PSF	44.7 PSF	35.3 PSF	37.2 PSF	29.4 PSF	37.2 PSF	29.4 PSF	29.8 PSF	23.5 PSF	29.8 PSF	23.5 PSF	22.3 PSF	17.6 PSF	22.3 PSF	17.6 PSF	100.40 LB-FT	97.9 LB	278.1 LB	300.7 LB
24 "			35.2 PSF	27.8 PSF	35.2 PSF	27.8 PSF	29.3 PSF	23.1 PSF	29.3 PSF	23.1 PSF	23.4 PSF	18.5 PSF	23.4 PSF	18.5 PSF					100.40 LB-FT	77.0 LB	242.1 LB	257.3 LB
30 "			29.1 PSF	23.0 PSF	29.1 PSF	23.0 PSF	24.3 PSF	19.1 PSF	24.3 PSF	19.1 PSF									100.40 LB-FT	63.8 LB	220.0 LB	231.6 LB
36 "			24.9 PSF	19.7 PSF	24.9 PSF	19.7 PSF	20.8 PSF	16.4 PSF	20.8 PSF	16.4 PSF									100.40 LB-FT	54.6 LB	204.9 LB	228.1 LB
18 "	42 "	5040 in²	33.5 PSF	26.5 PSF	33.5 PSF	26.5 PSF	27.9 PSF	22.0 PSF	27.9 PSF	22.0 PSF	22.3 PSF	17.6 PSF	22.3 PSF	17.6 PSF					100.40 LB-FT	97.9 LB	294.5 LB	283.3 LB
24 "			26.4 PSF	20.8 PSF	26.4 PSF	20.8 PSF	22.0 PSF	17.3 PSF	22.0 PSF	17.3 PSF									100.40 LB-FT	77.0 LB	255.0 LB	249.9 LB
30 "			21.8 PSF	17.2 PSF	21.8 PSF	17.2 PSF													100.40 LB-FT	63.8 LB	230.6 LB	228.7 LB
36 "																						
18 "	48 "	6912 in²	24.4 PSF	19.3 PSF	24.4 PSF	19.3 PSF	20.3 PSF	16.1 PSF	20.3 PSF	16.1 PSF									100.40 LB-FT	97.9 LB	310.8 LB	279.3 LB
24 "																						
30 "																						
36 "																						

24" STAND DEPTH: MAX FACE AREA (1104in² - 4608in²), FRAME QUANTITY (2-5 FRAMES)

STAND CLEAR HEIGHT	MAX MEAN UNIT HEIGHT	MAX FACE AREA	UNIT TO FRAME RATIO: MAX FACE AREA : 5 FRAMES — ANCHOR TYPE: 1 OR 4 — MAX ALLOWABLE LATERAL LOAD	MAX ALLOWABLE UPLIFT	ANCHORS TYPE: 2 OR 3 — MAX ALLOWABLE LATERAL LOAD	MAX ALLOWABLE UPLIFT	MAX FACE AREA : 4 FRAMES — ANCHOR TYPE: 1 OR 4 — MAX ALLOWABLE LATERAL LOAD	MAX ALLOWABLE UPLIFT	ANCHORS TYPE: 2 OR 3 — MAX ALLOWABLE LATERAL LOAD	MAX ALLOWABLE UPLIFT	MAX FACE AREA : 3 FRAMES — ANCHOR TYPE: 1 OR 4 — MAX ALLOWABLE LATERAL LOAD	MAX ALLOWABLE UPLIFT	ANCHORS TYPE: 2 OR 3 — MAX ALLOWABLE LATERAL LOAD	MAX ALLOWABLE UPLIFT	MAX FACE AREA : 2 FRAMES — ANCHOR TYPE: 1 OR 4 — MAX ALLOWABLE LATERAL LOAD	MAX ALLOWABLE UPLIFT	ANCHORS TYPE: 2 OR 3 — MAX ALLOWABLE LATERAL LOAD	MAX ALLOWABLE UPLIFT	LOAD TRANSFER INFORMATION FOR USE WITH HOST STRUCTURE VERIFICATION ONLY — MAX. BASE MOMENT (M)	MAX. BASE SHEAR (V)	MAX. BASE UPLIFT (T)	MAX. BASE GRAVITY (C)
18 "	24 "	1104 in²	136.5 PSF	107.7 PSF	136.5 PSF	107.7 PSF	109.2 PSF	86.2 PSF	109.2 PSF	86.2 PSF	81.9 PSF	64.6 PSF	81.9 PSF	64.6 PSF	54.6 PSF	43.1 PSF	54.6 PSF	43.1 PSF	100.40 LB-FT	104.6 LB	361.4 LB	373.2 LB
24 "			106.9 PSF	84.4 PSF	106.9 PSF	84.4 PSF	85.5 PSF	67.5 PSF	85.5 PSF	67.5 PSF	64.1 PSF	50.6 PSF	64.1 PSF	50.6 PSF	42.7 PSF	33.7 PSF	42.7 PSF	33.7 PSF	100.40 LB-FT	81.9 LB	322.1 LB	362.5 LB
30 "			88.1 PSF	69.6 PSF	88.1 PSF	69.6 PSF	70.5 PSF	55.6 PSF	70.5 PSF	55.6 PSF	52.8 PSF	41.7 PSF	52.8 PSF	41.7 PSF	35.2 PSF	27.8 PSF	35.2 PSF	27.8 PSF	100.40 LB-FT	67.5 LB	297.8 LB	356.4 LB
36 "			75.1 PSF	59.3 PSF	75.1 PSF	59.3 PSF	60.1 PSF	47.4 PSF	60.1 PSF	47.4 PSF	45.0 PSF	35.5 PSF	45.0 PSF	35.5 PSF	30.0 PSF	23.7 PSF	30.0 PSF	23.7 PSF	100.40 LB-FT	57.6 LB	281.2 LB	352.5 LB
18 "	30 "	1860 in²	81.0 PSF	63.9 PSF	81.0 PSF	63.9 PSF	64.8 PSF	51.1 PSF	64.8 PSF	51.1 PSF	48.6 PSF	38.3 PSF	48.6 PSF	38.3 PSF	32.4 PSF	25.5 PSF	32.4 PSF	25.5 PSF	100.40 LB-FT	104.6 LB	387.6 LB	399.4 LB
24 "			63.4 PSF	50.1 PSF	63.4 PSF	50.1 PSF	50.7 PSF	40.0 PSF	50.7 PSF	40.0 PSF	38.0 PSF	30.0 PSF	38.0 PSF	30.0 PSF	25.3 PSF	20.0 PSF	25.3 PSF	20.0 PSF	100.40 LB-FT	81.9 LB	342.6 LB	383.0 LB
30 "			52.3 PSF	41.3 PSF	52.3 PSF	41.3 PSF	41.8 PSF	33.0 PSF	41.8 PSF	33.0 PSF	31.3 PSF	24.7 PSF	31.3 PSF	24.7 PSF	20.9 PSF	16.5 PSF	20.9 PSF	16.5 PSF	100.40 LB-FT	67.5 LB	314.7 LB	373.3 LB
36 "			44.5 PSF	35.2 PSF	44.5 PSF	35.2 PSF	35.6 PSF	28.1 PSF	35.6 PSF	28.1 PSF	26.7 PSF	21.1 PSF	26.7 PSF	21.1 PSF					100.40 LB-FT	57.6 LB	295.7 LB	321.9 LB
18 "	36 "	2520 in²	59.8 PSF	47.2 PSF	59.8 PSF	47.2 PSF	47.8 PSF	37.7 PSF	47.8 PSF	37.7 PSF	35.8 PSF	28.3 PSF	35.8 PSF	28.3 PSF	23.9 PSF	18.8 PSF	23.9 PSF	18.8 PSF	100.40 LB-FT	104.6 LB	413.8 LB	425.5 LB
24 "			46.8 PSF	36.9 PSF	46.8 PSF	36.9 PSF	37.4 PSF	29.5 PSF	37.4 PSF	29.5 PSF	28.1 PSF	22.1 PSF	28.1 PSF	22.1 PSF					100.40 LB-FT	81.9 LB	363.1 LB	358.5 LB
30 "			38.6 PSF	30.4 PSF	38.6 PSF	30.4 PSF	30.8 PSF	24.3 PSF	30.8 PSF	24.3 PSF	23.1 PSF	18.2 PSF	23.1 PSF	18.2 PSF					100.40 LB-FT	67.5 LB	331.6 LB	345.2 LB
36 "			32.9 PSF	25.9 PSF	32.9 PSF	25.9 PSF	26.3 PSF	20.7 PSF	26.3 PSF	20.7 PSF									100.40 LB-FT	57.6 LB	310.1 LB	313.8 LB
18 "	42 "	3360 in²	44.8 PSF	35.4 PSF	44.8 PSF	35.4 PSF	35.8 PSF	28.3 PSF	35.8 PSF	28.3 PSF	26.9 PSF	21.2 PSF	26.9 PSF	21.2 PSF					100.40 LB-FT	104.6 LB	439.9 LB	406.7 LB
24 "			35.1 PSF	27.7 PSF	35.1 PSF	27.7 PSF	28.1 PSF	22.1 PSF	28.1 PSF	22.1 PSF	21.0 PSF	16.6 PSF	21.0 PSF	16.6 PSF					100.40 LB-FT	81.9 LB	383.5 LB	379.0 LB
30 "			28.9 PSF	22.8 PSF	28.9 PSF	22.8 PSF	23.1 PSF	18.2 PSF	23.1 PSF	18.2 PSF									100.40 LB-FT	67.5 LB	348.5 LB	339.6 LB
36 "			24.6 PSF	19.4 PSF	24.6 PSF	19.4 PSF													100.40 LB-FT	57.6 LB	324.5 LB	314.7 LB
18 "	48 "	4608 in²	32.7 PSF	25.8 PSF	32.7 PSF	25.8 PSF	26.1 PSF	20.6 PSF	26.1 PSF	20.6 PSF									100.40 LB-FT	104.6 LB	466.1 LB	410.4 LB
24 "			25.6 PSF	20.2 PSF	25.6 PSF	20.2 PSF	20.4 PSF	16.1 PSF	20.4 PSF	16.1 PSF									100.40 LB-FT	81.9 LB	404.0 LB	377.0 LB
30 "			21.1 PSF	16.6 PSF	21.1 PSF	16.6 PSF													100.40 LB-FT	67.5 LB	365.4 LB	343.0 LB
36 "																						

FRANK BENNARDO, P.E.
PE# 0046549 CA# 9885

FRANK L. BENNARDO LICENSE No PE0046549 STATE OF FLORIDA PROFESSIONAL ENGINEER

12/28/2023

DECEMBER 21, 2023

FL

FL 16921.1

ENGINEERING EXPRESS®
POSTAL ADDRESS:
2234 NORTH FEDERAL HWY #7664
BOCA RATON, FL 33431
ENGINEERINGEXPRESS.COM

PRECISION ALUMINUM PRODUCTS, INC.
1339 SW 1ST WAY
DEERFIELD BEACH, FL 33441
(954) 480-6919

ALUMINUM A/C STANDS
FLORIDA BUILDING CODE EIGHTH EDITION (2023)
FLORIDA STATEWIDE APPROVAL (FSA FL#16921.1)

REMARKS	DRWN	CHKD	DATE
PREV. SUBMITTAL (20-32768)	CSL	RWN	12/15/20
2023 FBC UPDATE & TECH. CHANGES	MRT	RWN	12/08/23

COPYRIGHT ENGINEERING EXPRESS®

23-69401

SCALE: NTS UNLESS NOTED

12/21/2023 1:55 PM MILTON c:\users\milton\engineering express\production - documents\projects\23-\23-69401 2023 product fbc update fl16921\work\2023 fbc\drawings & cad\23-69401c - fl16921.1 - cad.dwg

"STD" STAND DESIGN SCHEDULE CONTINUED

DESIGN SCHEDULES NOTES:

1. DESIGN SCHEDULES SHOWN HEREIN ARE REFERENCED TO ALLOWABLE STRENGTH DESIGN (ASD) METHODOLOGY.
2. EMPTY CELLS DENOTES CONDITIONS NOT ALLOWED TO USE.
3. MAXIMUM CALCULATED FACE AREA SHALL BE EQUAL TO OR LESS THAN THE MAXIMUM ALLOWABLE FACE AREA FOR EACH CONFIGURATION.
4. REFERENCE ANCHOR SCHEDULE FOR ANCHOR TYPES LISTED HEREIN.

36" STAND DEPTH: MAX FACE AREA (1104in² - 4608in²), FRAME QUANTITY (2-5 FRAMES)

STAND CLEAR HEIGHT	MAX MEAN UNIT HEIGHT	MAX FACE AREA	UNIT TO FRAME RATIO: MAX FACE AREA : 5 FRAMES, ANCHOR TYPE: 1 OR 4 — MAX ALLOWABLE LATERAL LOAD	MAX ALLOWABLE UPLIFT	ANCHORS TYPE: 2 OR 3 — MAX ALLOWABLE LATERAL LOAD	MAX ALLOWABLE UPLIFT	MAX FACE AREA : 4 FRAMES, ANCHOR TYPE: 1 OR 4 — MAX ALLOWABLE LATERAL LOAD	MAX ALLOWABLE UPLIFT	ANCHORS TYPE: 2 OR 3 — MAX ALLOWABLE LATERAL LOAD	MAX ALLOWABLE UPLIFT	MAX FACE AREA : 3 FRAMES, ANCHOR TYPE: 1 OR 4 — MAX ALLOWABLE LATERAL LOAD	MAX ALLOWABLE UPLIFT	ANCHORS TYPE: 2 OR 3 — MAX ALLOWABLE LATERAL LOAD	MAX ALLOWABLE UPLIFT	MAX FACE AREA : 2 FRAMES, ANCHOR TYPE: 1 OR 4 — MAX ALLOWABLE LATERAL LOAD	MAX ALLOWABLE UPLIFT	ANCHORS TYPE: 2 OR 3 — MAX ALLOWABLE LATERAL LOAD	MAX ALLOWABLE UPLIFT	LOAD TRANSFER INFORMATION FOR USE WITH HOST STRUCTURE VERIFICATION ONLY: MAX. BASE MOMENT (M)	MAX. BASE SHEAR (V)	MAX. BASE UPLIFT (T)	MAX. BASE GRAVITY (C)
18 "	24 "	1104 in²	127.7 PSF	100.8 PSF	127.7 PSF	100.8 PSF	102.1 PSF	80.6 PSF	102.1 PSF	80.6 PSF	76.6 PSF	60.4 PSF	76.6 PSF	60.4 PSF	51.0 PSF	40.3 PSF	51.0 PSF	40.3 PSF	100.40 LB-FT	97.9 LB	247.8 LB	268.1 LB
24 "			100.4 PSF	79.3 PSF	100.4 PSF	79.3 PSF	80.3 PSF	63.4 PSF	80.3 PSF	63.4 PSF	60.2 PSF	47.5 PSF	60.2 PSF	47.5 PSF	40.1 PSF	31.7 PSF	40.1 PSF	31.7 PSF	100.40 LB-FT	77.0 LB	218.7 LB	265.4 LB
30 "			83.2 PSF	65.7 PSF	83.2 PSF	65.7 PSF	66.6 PSF	52.5 PSF	66.6 PSF	52.5 PSF	49.9 PSF	39.4 PSF	49.9 PSF	39.4 PSF	33.3 PSF	26.2 PSF	33.3 PSF	26.2 PSF	100.40 LB-FT	63.8 LB	200.9 LB	264.3 LB
36 "			71.2 PSF	56.2 PSF	71.2 PSF	56.2 PSF	57.0 PSF	45.0 PSF	57.0 PSF	45.0 PSF	42.7 PSF	33.7 PSF	42.7 PSF	33.7 PSF	28.5 PSF	22.5 PSF	28.5 PSF	22.5 PSF	100.40 LB-FT	54.6 LB	188.9 LB	263.9 LB
18 "	30 "	1860 in²	75.8 PSF	59.8 PSF	75.8 PSF	59.8 PSF	60.6 PSF	47.8 PSF	60.6 PSF	47.8 PSF	45.4 PSF	35.9 PSF	45.4 PSF	35.9 PSF	30.3 PSF	23.9 PSF	30.3 PSF	23.9 PSF	100.40 LB-FT	97.9 LB	264.1 LB	284.4 LB
24 "			59.6 PSF	47.0 PSF	59.6 PSF	47.0 PSF	47.7 PSF	37.6 PSF	47.7 PSF	37.6 PSF	35.7 PSF	28.2 PSF	35.7 PSF	28.2 PSF	23.8 PSF	18.8 PSF	23.8 PSF	18.8 PSF	100.40 LB-FT	77.0 LB	231.5 LB	278.2 LB
30 "			49.4 PSF	39.0 PSF	49.4 PSF	39.0 PSF	39.5 PSF	31.2 PSF	39.5 PSF	31.2 PSF	29.6 PSF	23.4 PSF	29.6 PSF	23.4 PSF					100.40 LB-FT	63.8 LB	211.6 LB	229.9 LB
36 "			42.3 PSF	33.4 PSF	42.3 PSF	33.4 PSF	33.8 PSF	26.7 PSF	33.8 PSF	26.7 PSF	25.3 PSF	20.0 PSF	25.3 PSF	20.0 PSF					100.40 LB-FT	54.6 LB	198.0 LB	228.0 LB
18 "	36 "	2520 in²	55.9 PSF	44.1 PSF	55.9 PSF	44.1 PSF	44.7 PSF	35.3 PSF	44.7 PSF	35.3 PSF	33.5 PSF	26.5 PSF	33.5 PSF	26.5 PSF	22.3 PSF	17.6 PSF	22.3 PSF	17.6 PSF	100.40 LB-FT	97.9 LB	280.4 LB	300.7 LB
24 "			44.0 PSF	34.7 PSF	44.0 PSF	34.7 PSF	35.2 PSF	27.8 PSF	35.2 PSF	27.8 PSF	26.4 PSF	20.8 PSF	26.4 PSF	20.8 PSF					100.40 LB-FT	77.0 LB	244.4 LB	246.1 LB
30 "			36.4 PSF	28.7 PSF	36.4 PSF	28.7 PSF	29.1 PSF	23.0 PSF	29.1 PSF	23.0 PSF	21.8 PSF	17.2 PSF	21.8 PSF	17.2 PSF					100.40 LB-FT	63.8 LB	222.2 LB	240.6 LB
36 "			31.2 PSF	24.6 PSF	31.2 PSF	24.6 PSF	24.9 PSF	19.7 PSF	24.9 PSF	19.7 PSF									100.40 LB-FT	54.6 LB	207.1 LB	214.6 LB
18 "	42 "	3360 in²	41.9 PSF	33.1 PSF	41.9 PSF	33.1 PSF	33.5 PSF	26.5 PSF	33.5 PSF	26.5 PSF	25.1 PSF	19.8 PSF	25.1 PSF	19.8 PSF					100.40 LB-FT	97.9 LB	296.7 LB	272.0 LB
24 "			33.0 PSF	26.0 PSF	33.0 PSF	26.0 PSF	26.4 PSF	20.8 PSF	26.4 PSF	20.8 PSF									100.40 LB-FT	77.0 LB	257.2 LB	236.4 LB
30 "			27.3 PSF	21.5 PSF	27.3 PSF	21.5 PSF	21.8 PSF	17.2 PSF	21.8 PSF	17.2 PSF									100.40 LB-FT	63.8 LB	232.9 LB	228.7 LB
36 "			23.4 PSF	18.4 PSF	23.4 PSF	18.4 PSF													100.40 LB-FT	54.6 LB	216.2 LB	210.2 LB
18 "	48 "	4608 in²	30.5 PSF	24.1 PSF	30.5 PSF	24.1 PSF	24.4 PSF	19.3 PSF	24.4 PSF	19.3 PSF									100.40 LB-FT	97.9 LB	313.0 LB	265.8 LB
24 "			24.0 PSF	19.0 PSF	24.0 PSF	19.0 PSF													100.40 LB-FT	77.0 LB	270.0 LB	235.7 LB
30 "																						
36 "																						

24" STAND DEPTH: MAX FACE AREA (552in² - 2304in²), FRAME QUANTITY (2-3 FRAMES)

STAND CLEAR HEIGHT	MAX MEAN UNIT HEIGHT	MAX FACE AREA	UNIT TO FRAME RATIO: MAX FACE AREA : 3 FRAMES, ANCHOR TYPE: 1 OR 4 — MAX ALLOWABLE LATERAL LOAD	MAX ALLOWABLE UPLIFT	ANCHOR TYPE: 2 OR 3 — MAX ALLOWABLE LATERAL LOAD	MAX ALLOWABLE UPLIFT	MAX FACE AREA : 2 FRAMES, ANCHOR TYPE: 1 OR 4 — MAX ALLOWABLE LATERAL LOAD	MAX ALLOWABLE UPLIFT	ANCHOR TYPE: 2 OR 3 — MAX ALLOWABLE LATERAL LOAD	MAX ALLOWABLE UPLIFT	LOAD TRANSFER INFORMATION FOR USE WITH HOST STRUCTURE VERIFICATION ONLY: MAX. BASE MOMENT (M)	MAX. BASE SHEAR (V)	MAX. BASE UPLIFT (T)	MAX. BASE GRAVITY (C)
18 "	24 "	552 in²	163.8 PSF	129.3 PSF	163.8 PSF	129.3 PSF	109.2 PSF	86.2 PSF	109.2 PSF	86.2 PSF	100.40 LB-FT	104.6 LB	362.9 LB	305.7 LB
24 "			128.3 PSF	101.2 PSF	128.3 PSF	101.2 PSF	85.5 PSF	67.5 PSF	85.5 PSF	67.5 PSF	100.40 LB-FT	81.9 LB	323.6 LB	295.0 LB
30 "			105.7 PSF	83.5 PSF	105.7 PSF	83.5 PSF	70.5 PSF	55.6 PSF	70.5 PSF	55.6 PSF	100.40 LB-FT	67.5 LB	299.3 LB	288.9 LB
36 "			90.1 PSF	71.1 PSF	90.1 PSF	71.1 PSF	60.1 PSF	47.4 PSF	60.1 PSF	47.4 PSF	100.40 LB-FT	57.6 LB	282.7 LB	285.0 LB
18 "	30 "	930 in²	97.2 PSF	76.7 PSF	97.2 PSF	76.7 PSF	64.8 PSF	51.1 PSF	64.8 PSF	51.1 PSF	100.40 LB-FT	104.6 LB	389.1 LB	331.9 LB
24 "			76.1 PSF	60.1 PSF	76.1 PSF	60.1 PSF	50.7 PSF	40.0 PSF	50.7 PSF	40.0 PSF	100.40 LB-FT	81.9 LB	344.1 LB	315.5 LB
30 "			62.7 PSF	49.5 PSF	62.7 PSF	49.5 PSF	41.8 PSF	33.0 PSF	41.8 PSF	33.0 PSF	100.40 LB-FT	67.5 LB	316.2 LB	305.8 LB
36 "			53.5 PSF	42.2 PSF	53.5 PSF	42.2 PSF	35.6 PSF	28.1 PSF	35.6 PSF	28.1 PSF	100.40 LB-FT	57.6 LB	297.2 LB	299.4 LB
18 "	36 "	1260 in²	71.7 PSF	56.6 PSF	71.7 PSF	56.6 PSF	47.8 PSF	37.7 PSF	47.8 PSF	37.7 PSF	100.40 LB-FT	104.6 LB	415.3 LB	358.0 LB
24 "			56.2 PSF	44.3 PSF	56.2 PSF	44.3 PSF	37.4 PSF	29.5 PSF	37.4 PSF	29.5 PSF	100.40 LB-FT	81.9 LB	364.6 LB	336.0 LB
30 "			46.3 PSF	36.5 PSF	46.3 PSF	36.5 PSF	30.8 PSF	24.3 PSF	30.8 PSF	24.3 PSF	100.40 LB-FT	67.5 LB	333.1 LB	322.7 LB
36 "			39.5 PSF	31.1 PSF	39.5 PSF	31.1 PSF	26.3 PSF	20.7 PSF	26.3 PSF	20.7 PSF	100.40 LB-FT	57.6 LB	311.6 LB	313.8 LB
18 "	42 "	1680 in²	53.8 PSF	42.4 PSF	53.8 PSF	42.4 PSF	35.8 PSF	28.3 PSF	35.8 PSF	28.3 PSF	100.40 LB-FT	104.6 LB	441.4 LB	384.2 LB
24 "			42.1 PSF	33.2 PSF	42.1 PSF	33.2 PSF	28.1 PSF	22.1 PSF	28.1 PSF	22.1 PSF	100.40 LB-FT	81.9 LB	385.0 LB	356.5 LB
30 "			34.7 PSF	27.4 PSF	34.7 PSF	27.4 PSF	23.1 PSF	18.2 PSF	23.1 PSF	18.2 PSF	100.40 LB-FT	67.5 LB	350.0 LB	339.6 LB
36 "			29.6 PSF	23.3 PSF	29.6 PSF	23.3 PSF					100.40 LB-FT	57.6 LB	326.0 LB	305.7 LB
18 "	48 "	2304 in²	39.2 PSF	30.9 PSF	39.2 PSF	30.9 PSF	26.1 PSF	20.6 PSF	26.1 PSF	20.6 PSF	100.40 LB-FT	104.6 LB	467.6 LB	410.4 LB
24 "			30.7 PSF	24.2 PSF	30.7 PSF	24.2 PSF	20.4 PSF	16.1 PSF	20.4 PSF	16.1 PSF	100.40 LB-FT	81.9 LB	405.5 LB	377.0 LB
30 "			25.3 PSF	20.0 PSF	25.3 PSF	20.0 PSF					100.40 LB-FT	67.5 LB	366.9 LB	334.0 LB
36 "			21.6 PSF	17.0 PSF	21.6 PSF	17.0 PSF					100.40 LB-FT	57.6 LB	340.4 LB	320.1 LB

36" STAND DEPTH: MAX FACE AREA (552in² - 2304in²), FRAME QUANTITY (2-3 FRAMES)

STAND CLEAR HEIGHT	MAX MEAN UNIT HEIGHT	MAX FACE AREA	UNIT TO FRAME RATIO: MAX FACE AREA : 3 FRAMES, ANCHOR TYPE: 1 OR 4 — MAX ALLOWABLE LATERAL LOAD	MAX ALLOWABLE UPLIFT	ANCHOR TYPE: 2 OR 3 — MAX ALLOWABLE LATERAL LOAD	MAX ALLOWABLE UPLIFT	MAX FACE AREA : 2 FRAMES, ANCHOR TYPE: 1 OR 4 — MAX ALLOWABLE LATERAL LOAD	MAX ALLOWABLE UPLIFT	ANCHOR TYPE: 2 OR 3 — MAX ALLOWABLE LATERAL LOAD	MAX ALLOWABLE UPLIFT	LOAD TRANSFER INFORMATION FOR USE WITH HOST STRUCTURE VERIFICATION ONLY: MAX. BASE MOMENT (M)	MAX. BASE SHEAR (V)	MAX. BASE UPLIFT (T)	MAX. BASE GRAVITY (C)
18 "	24 "	552 in²	153.2 PSF	120.9 PSF	153.2 PSF	120.9 PSF	102.1 PSF	80.6 PSF	102.1 PSF	80.6 PSF	100.40 LB-FT	97.9 LB	249.3 LB	200.6 LB
24 "			120.5 PSF	95.1 PSF	120.5 PSF	95.1 PSF	80.3 PSF	63.4 PSF	80.3 PSF	63.4 PSF	100.40 LB-FT	77.0 LB	220.2 LB	197.9 LB
30 "			99.9 PSF	78.8 PSF	99.9 PSF	78.8 PSF	66.6 PSF	52.5 PSF	66.6 PSF	52.5 PSF	100.40 LB-FT	63.8 LB	202.4 LB	196.8 LB
36 "			85.5 PSF	67.5 PSF	85.5 PSF	67.5 PSF	57.0 PSF	45.0 PSF	57.0 PSF	45.0 PSF	100.40 LB-FT	54.6 LB	190.4 LB	196.4 LB
18 "	30 "	930 in²	90.9 PSF	71.8 PSF	90.9 PSF	71.8 PSF	60.6 PSF	47.8 PSF	60.6 PSF	47.8 PSF	100.40 LB-FT	97.9 LB	265.6 LB	216.9 LB
24 "			71.5 PSF	56.5 PSF	71.5 PSF	56.5 PSF	47.7 PSF	37.6 PSF	47.7 PSF	37.6 PSF	100.40 LB-FT	77.0 LB	233.0 LB	210.7 LB
30 "			59.3 PSF	46.8 PSF	59.3 PSF	46.8 PSF	39.5 PSF	31.2 PSF	39.5 PSF	31.2 PSF	100.40 LB-FT	63.8 LB	213.1 LB	207.4 LB
36 "			50.7 PSF	40.0 PSF	50.7 PSF	40.0 PSF	33.8 PSF	26.7 PSF	33.8 PSF	26.7 PSF	100.40 LB-FT	54.6 LB	199.5 LB	205.5 LB
18 "	36 "	1260 in²	67.1 PSF	53.0 PSF	67.1 PSF	53.0 PSF	44.7 PSF	35.3 PSF	44.7 PSF	35.3 PSF	100.40 LB-FT	97.9 LB	281.9 LB	233.2 LB
24 "			52.8 PSF	41.7 PSF	52.8 PSF	41.7 PSF	35.2 PSF	27.8 PSF	35.2 PSF	27.8 PSF	100.40 LB-FT	77.0 LB	245.9 LB	223.6 LB
30 "			43.7 PSF	34.5 PSF	43.7 PSF	34.5 PSF	29.1 PSF	23.0 PSF	29.1 PSF	23.0 PSF	100.40 LB-FT	63.8 LB	223.7 LB	218.1 LB
36 "			37.4 PSF	29.5 PSF	37.4 PSF	29.5 PSF	24.9 PSF	19.7 PSF	24.9 PSF	19.7 PSF	100.40 LB-FT	54.6 LB	208.6 LB	214.6 LB
18 "	42 "	1680 in²	50.3 PSF	39.7 PSF	50.3 PSF	39.7 PSF	33.5 PSF	26.5 PSF	33.5 PSF	26.5 PSF	100.40 LB-FT	97.9 LB	298.2 LB	249.5 LB
24 "			39.6 PSF	31.2 PSF	39.6 PSF	31.2 PSF	26.4 PSF	20.8 PSF	26.4 PSF	20.8 PSF	100.40 LB-FT	77.0 LB	258.7 LB	236.4 LB
30 "			32.8 PSF	25.9 PSF	32.8 PSF	25.9 PSF	21.8 PSF	17.2 PSF	21.8 PSF	17.2 PSF	100.40 LB-FT	63.8 LB	234.4 LB	228.7 LB
36 "			28.1 PSF	22.1 PSF	28.1 PSF	22.1 PSF					100.40 LB-FT	54.6 LB	217.7 LB	201.2 LB
18 "	48 "	2304 in²	36.7 PSF	28.9 PSF	36.7 PSF	28.9 PSF	24.4 PSF	19.3 PSF	24.4 PSF	19.3 PSF	100.40 LB-FT	97.9 LB	314.5 LB	265.8 LB
24 "			28.8 PSF	22.8 PSF	28.8 PSF	22.8 PSF					100.40 LB-FT	77.0 LB	271.5 LB	226.7 LB
30 "			23.9 PSF	18.8 PSF	23.9 PSF	18.8 PSF					100.40 LB-FT	63.8 LB	245.0 LB	216.9 LB
36 "			20.4 PSF	16.1 PSF	20.4 PSF	16.1 PSF					100.40 LB-FT	54.6 LB	226.9 LB	210.3 LB

FRANK BENNARDO, P.E.
PE# 0046549 CA# 9885

FRANK L. BENNARDO LICENSE No PE0046549 STATE OF FLORIDA PROFESSIONAL ENGINEER
12/28/2023

DECEMBER 21, 2023

FL

FL 16921.1

ENGINEERING EXPRESS®
POSTAL ADDRESS:
2234 NORTH FEDERAL HWY #7664
BOCA RATON, FL 33431
ENGINEERINGEXPRESS.COM

PRECISION ALUMINUM PRODUCTS, INC.
1339 SW 1ST WAY
DEERFIELD BEACH, FL 33441
(954) 480-6919

ALUMINUM A/C STANDS
FLORIDA BUILDING CODE EIGHTH EDITION (2023)
FLORIDA STATEWIDE APPROVAL (FSA FL#16921.1)

REMARKS	DRWN	CHKD	DATE
PREV. SUBMITTAL (20-32768)	CSL	RWN	12/15/20
2023 FBC UPDATE & TECH. CHANGES	MRT	RWN	12/08/23

COPYRIGHT ENGINEERING EXPRESS®

23-69401

SCALE: NTS UNLESS NOTED

12/21/2023 1:55 PM MILTON c:\users\milton\engineering express\production - documents\projects\23-\23-69401 2023 product fbc update fl16921\work\2023 fbc\drawings & cad\23-69401c - fl16921.1 - cad.dwg

"HD" STAND DESIGN SCHEDULE

DESIGN SCHEDULES NOTES:

1. DESIGN SCHEDULES SHOWN HEREIN ARE REFERENCED TO ALLOWABLE STRENGTH DESIGN (ASD) METHODOLOGY.
2. EMPTY CELLS DENOTES CONDITIONS NOT ALLOWED TO USE.
3. MAXIMUM CALCULATED FACE AREA SHALL BE EQUAL TO OR LESS THAN THE MAXIMUM ALLOWABLE FACE AREA FOR EACH CONFIGURATION.
4. REFERENCE ANCHOR SCHEDULE FOR ANCHOR TYPES LISTED HEREIN.

FRANK BENNARDO, P.E.
PE# 0046549 CA# 9885

FRANK L. BENNARDO LICENSE No PE0046549 STATE OF FLORIDA PROFESSIONAL ENGINEER

12/28/2023

DECEMBER 21, 2023

FL

24" STAND DEPTH: MAX FACE AREA (2760in² - 11520in²), FRAME QUANTITY (5-8 FRAMES)

UNIT TO FRAME RATIO

STAND CLEAR HEIGHT	MAX MEAN UNIT HEIGHT	MAX FACE AREA	MAX FACE AREA : 8 FRAMES				MAX FACE AREA : 7 FRAMES				MAX FACE AREA : 6 FRAMES				MAX FACE AREA : 5 FRAMES				LOAD TRANSFER INFORMATION FOR USE WITH HOST STRUCTURE VERIFICATION ONLY			
			ANCHOR TYPE: 1 OR 4		ANCHORS TYPE: 2 OR 3		ANCHOR TYPE: 1 OR 4		ANCHORS TYPE: 2 OR 3		ANCHOR TYPE: 1 OR 4		ANCHORS TYPE: 2 OR 3		ANCHOR TYPE: 1 OR 4		ANCHORS TYPE: 2 OR 3					
			MAX ALLOWABLE LATERAL LOAD	MAX ALLOWABLE UPLIFT	MAX ALLOWABLE LATERAL LOAD	MAX ALLOWABLE UPLIFT	MAX ALLOWABLE LATERAL LOAD	MAX ALLOWABLE UPLIFT	MAX ALLOWABLE LATERAL LOAD	MAX ALLOWABLE UPLIFT	MAX ALLOWABLE LATERAL LOAD	MAX ALLOWABLE UPLIFT	MAX ALLOWABLE LATERAL LOAD	MAX ALLOWABLE UPLIFT	MAX ALLOWABLE LATERAL LOAD	MAX ALLOWABLE UPLIFT	MAX ALLOWABLE LATERAL LOAD	MAX ALLOWABLE UPLIFT	MAX. BASE MOMENT (M)	MAX. BASE SHEAR (V)	MAX. BASE UPLIFT (T)	MAX. BASE GRAVITY (C)
18 "	24 "	2760 in²	200.0 PSF	157.8 PSF	171.4 PSF	135.3 PSF	176.3 PSF	139.2 PSF	150.0 PSF	118.4 PSF	151.1 PSF	119.3 PSF	128.7 PSF	101.6 PSF	125.9 PSF	99.4 PSF	107.4 PSF	84.7 PSF	247.00 LB-FT	241.4 LB	838.5 LB	684.6 LB
24 "			158.5 PSF	125.1 PSF	141.3 PSF	111.5 PSF	138.7 PSF	109.5 PSF	123.7 PSF	97.6 PSF	118.9 PSF	93.8 PSF	106.1 PSF	83.8 PSF	99.1 PSF	78.2 PSF	88.5 PSF	69.9 PSF	247.00 LB-FT	189.9 LB	753.3 LB	662.4 LB
30 "			130.6 PSF	103.1 PSF	130.6 PSF	103.1 PSF	114.3 PSF	90.2 PSF	114.3 PSF	90.2 PSF	98.0 PSF	77.3 PSF	98.0 PSF	77.3 PSF	81.6 PSF	64.4 PSF	81.6 PSF	64.4 PSF	245.70 LB-FT	156.5 LB	696.5 LB	647.8 LB
36 "			104.2 PSF	82.3 PSF	104.2 PSF	82.3 PSF	91.2 PSF	72.0 PSF	91.2 PSF	72.0 PSF	78.1 PSF	61.7 PSF	78.1 PSF	61.7 PSF	65.1 PSF	51.4 PSF	65.1 PSF	51.4 PSF	229.00 LB-FT	124.8 LB	615.3 LB	606.6 LB
18 "	30 "	4650 in²	119.6 PSF	94.4 PSF	100.1 PSF	79.1 PSF	104.6 PSF	82.6 PSF	87.7 PSF	69.2 PSF	89.7 PSF	70.8 PSF	75.2 PSF	59.4 PSF	74.7 PSF	59.0 PSF	62.7 PSF	49.5 PSF	247.00 LB-FT	241.4 LB	900.9 LB	745.0 LB
24 "			94.1 PSF	74.3 PSF	82.8 PSF	65.3 PSF	82.3 PSF	65.0 PSF	72.5 PSF	57.2 PSF	70.5 PSF	55.7 PSF	62.2 PSF	49.1 PSF	58.8 PSF	46.4 PSF	51.9 PSF	40.9 PSF	247.00 LB-FT	189.9 LB	800.7 LB	709.9 LB
30 "			77.5 PSF	61.2 PSF	77.5 PSF	61.2 PSF	67.8 PSF	53.5 PSF	67.8 PSF	53.5 PSF	58.1 PSF	45.9 PSF	58.1 PSF	45.9 PSF	48.4 PSF	38.2 PSF	48.4 PSF	38.2 PSF	245.70 LB-FT	156.5 LB	735.7 LB	687.0 LB
36 "			61.8 PSF	48.8 PSF	61.8 PSF	48.8 PSF	54.1 PSF	42.7 PSF	54.1 PSF	42.7 PSF	46.4 PSF	36.6 PSF	46.4 PSF	36.6 PSF	38.6 PSF	30.5 PSF	38.6 PSF	30.5 PSF	229.00 LB-FT	124.8 LB	646.5 LB	637.8 LB
18 "	36 "	6300 in²	88.3 PSF	69.7 PSF	72.8 PSF	57.5 PSF	77.2 PSF	61.0 PSF	63.7 PSF	50.3 PSF	66.2 PSF	52.2 PSF	54.7 PSF	43.1 PSF	55.1 PSF	43.5 PSF	45.6 PSF	36.0 PSF	247.00 LB-FT	241.4 LB	961.3 LB	805.3 LB
24 "			69.4 PSF	54.8 PSF	60.3 PSF	47.6 PSF	60.7 PSF	47.9 PSF	52.8 PSF	41.7 PSF	52.1 PSF	41.1 PSF	45.3 PSF	35.8 PSF	43.4 PSF	34.2 PSF	37.8 PSF	29.8 PSF	247.00 LB-FT	189.9 LB	848.2 LB	757.3 LB
30 "			57.2 PSF	45.1 PSF	57.2 PSF	45.1 PSF	50.0 PSF	39.5 PSF	50.0 PSF	39.5 PSF	42.9 PSF	33.8 PSF	42.9 PSF	33.8 PSF	35.7 PSF	28.2 PSF	35.7 PSF	28.2 PSF	245.70 LB-FT	156.5 LB	774.8 LB	726.1 LB
36 "			45.6 PSF	36.0 PSF	45.6 PSF	36.0 PSF	39.9 PSF	31.5 PSF	39.9 PSF	31.5 PSF	34.2 PSF	27.0 PSF	34.2 PSF	27.0 PSF	28.5 PSF	22.5 PSF	28.5 PSF	22.5 PSF	229.00 LB-FT	124.8 LB	677.7 LB	669.0 LB
18 "	42 "	8400 in²	65.8 PSF	52.0 PSF	53.8 PSF	42.5 PSF	57.6 PSF	45.5 PSF	47.1 PSF	37.2 PSF	49.4 PSF	39.0 PSF	40.4 PSF	31.9 PSF	41.2 PSF	32.5 PSF	33.7 PSF	26.6 PSF	246.30 LB-FT	240.7 LB	1016.2 LB	863.4 LB
24 "			52.1 PSF	41.1 PSF	44.7 PSF	35.3 PSF	45.5 PSF	35.9 PSF	39.1 PSF	30.9 PSF	39.0 PSF	30.8 PSF	33.5 PSF	26.5 PSF	32.5 PSF	25.7 PSF	28.0 PSF	22.1 PSF	247.00 LB-FT	189.9 LB	895.7 LB	804.8 LB
30 "			42.9 PSF	33.8 PSF	42.9 PSF	33.8 PSF	37.5 PSF	29.6 PSF	37.5 PSF	29.6 PSF	32.2 PSF	25.4 PSF	32.2 PSF	25.4 PSF	26.8 PSF	21.1 PSF	26.8 PSF	21.1 PSF	245.70 LB-FT	156.5 LB	813.9 LB	765.2 LB
36 "			34.2 PSF	27.0 PSF	34.2 PSF	27.0 PSF	29.9 PSF	23.6 PSF	29.9 PSF	23.6 PSF	25.6 PSF	20.2 PSF	25.6 PSF	20.2 PSF	21.4 PSF	16.9 PSF	21.4 PSF	16.9 PSF	229.00 LB-FT	124.8 LB	708.9 LB	700.2 LB
18 "	48 "	11520 in²	47.3 PSF	37.3 PSF	38.6 PSF	30.5 PSF	41.4 PSF	32.6 PSF	33.8 PSF	26.7 PSF	35.5 PSF	28.0 PSF	29.0 PSF	22.9 PSF	29.6 PSF	23.3 PSF	24.2 PSF	19.1 PSF	242.50 LB-FT	237.0 LB	1059.5 LB	911.5 LB
24 "			37.9 PSF	29.9 PSF	32.2 PSF	25.4 PSF	33.2 PSF	26.2 PSF	28.2 PSF	22.2 PSF	28.4 PSF	22.4 PSF	24.2 PSF	19.1 PSF	23.7 PSF	18.7 PSF	20.1 PSF	15.9 PSF	247.00 LB-FT	189.9 LB	943.2 LB	852.3 LB
30 "			31.3 PSF	24.7 PSF	31.3 PSF	24.7 PSF	27.3 PSF	21.6 PSF	27.3 PSF	21.6 PSF	23.4 PSF	18.5 PSF	23.4 PSF	18.5 PSF					245.70 LB-FT	156.5 LB	853.1 LB	781.9 LB
36 "			24.9 PSF	19.7 PSF	24.9 PSF	19.7 PSF	21.8 PSF	17.2 PSF	21.8 PSF	17.2 PSF									229.00 LB-FT	124.8 LB	740.2 LB	692.9 LB

36" STAND DEPTH: MAX FACE AREA (2760in² - 11520in²), FRAME QUANTITY (5-8 FRAMES)

UNIT TO FRAME RATIO

STAND CLEAR HEIGHT	MAX MEAN UNIT HEIGHT	MAX FACE AREA	MAX FACE AREA : 8 FRAMES				MAX FACE AREA : 7 FRAMES				MAX FACE AREA : 6 FRAMES				MAX FACE AREA : 5 FRAMES				LOAD TRANSFER INFORMATION FOR USE WITH HOST STRUCTURE VERIFICATION ONLY			
			ANCHOR TYPE: 1 OR 4		ANCHORS TYPE: 2 OR 3		ANCHOR TYPE: 1 OR 4		ANCHORS TYPE: 2 OR 3		ANCHOR TYPE: 1 OR 4		ANCHORS TYPE: 2 OR 3		ANCHOR TYPE: 1 OR 4		ANCHORS TYPE: 2 OR 3					
			MAX ALLOWABLE LATERAL LOAD	MAX ALLOWABLE UPLIFT	MAX ALLOWABLE LATERAL LOAD	MAX ALLOWABLE UPLIFT	MAX ALLOWABLE LATERAL LOAD	MAX ALLOWABLE UPLIFT	MAX ALLOWABLE LATERAL LOAD	MAX ALLOWABLE UPLIFT	MAX ALLOWABLE LATERAL LOAD	MAX ALLOWABLE UPLIFT	MAX ALLOWABLE LATERAL LOAD	MAX ALLOWABLE UPLIFT	MAX ALLOWABLE LATERAL LOAD	MAX ALLOWABLE UPLIFT	MAX ALLOWABLE LATERAL LOAD	MAX ALLOWABLE UPLIFT	MAX. BASE MOMENT (M)	MAX. BASE SHEAR (V)	MAX. BASE UPLIFT (T)	MAX. BASE GRAVITY (C)
18 "	24 "	2760 in²	188.0 PSF	148.4 PSF	172.8 PSF	136.4 PSF	164.5 PSF	129.9 PSF	151.3 PSF	119.4 PSF	141.0 PSF	111.3 PSF	129.7 PSF	102.4 PSF	117.5 PSF	92.7 PSF	108.2 PSF	85.4 PSF	247.00 LB-FT	225.2 LB	576.8 LB	441.3 LB
24 "			148.1 PSF	116.9 PSF	142.1 PSF	112.1 PSF	129.6 PSF	102.3 PSF	124.4 PSF	98.2 PSF	111.1 PSF	87.7 PSF	106.7 PSF	84.2 PSF	92.6 PSF	73.1 PSF	89.0 PSF	70.2 PSF	247.00 LB-FT	177.4 LB	510.6 LB	435.4 LB
30 "			123.1 PSF	97.1 PSF	123.1 PSF	97.1 PSF	107.7 PSF	85.0 PSF	107.7 PSF	85.0 PSF	92.3 PSF	72.8 PSF	92.3 PSF	72.8 PSF	76.9 PSF	60.7 PSF	76.9 PSF	60.7 PSF	247.00 LB-FT	147.4 LB	471.0 LB	433.8 LB
36 "			105.7 PSF	83.4 PSF	105.7 PSF	83.4 PSF	92.5 PSF	73.0 PSF	92.5 PSF	73.0 PSF	79.2 PSF	62.5 PSF	79.2 PSF	62.5 PSF	66.0 PSF	52.1 PSF	66.0 PSF	52.1 PSF	247.00 LB-FT	126.6 LB	444.7 LB	433.8 LB
18 "	30 "	4650 in²	111.6 PSF	88.1 PSF	101.5 PSF	80.1 PSF	97.6 PSF	77.1 PSF	88.8 PSF	70.1 PSF	83.7 PSF	66.0 PSF	76.2 PSF	60.2 PSF	69.7 PSF	55.0 PSF	63.6 PSF	50.2 PSF	247.00 LB-FT	225.2 LB	614.3 LB	478.8 LB
24 "			87.9 PSF	69.4 PSF	83.6 PSF	66.0 PSF	76.9 PSF	60.7 PSF	73.2 PSF	57.8 PSF	65.9 PSF	52.0 PSF	62.8 PSF	49.5 PSF	54.9 PSF	43.3 PSF	52.4 PSF	41.3 PSF	247.00 LB-FT	177.4 LB	540.2 LB	465.0 LB
30 "			73.0 PSF	57.6 PSF	73.0 PSF	57.6 PSF	63.9 PSF	50.4 PSF	63.9 PSF	50.4 PSF	54.8 PSF	43.2 PSF	54.8 PSF	43.2 PSF	45.6 PSF	36.0 PSF	45.6 PSF	36.0 PSF	247.00 LB-FT	147.4 LB	495.6 LB	458.4 LB
36 "			62.7 PSF	49.5 PSF	62.7 PSF	49.5 PSF	54.9 PSF	43.3 PSF	54.9 PSF	43.3 PSF	47.0 PSF	37.1 PSF	47.0 PSF	37.1 PSF	39.2 PSF	30.9 PSF	39.2 PSF	30.9 PSF	247.00 LB-FT	126.6 LB	465.8 LB	454.9 LB
18 "	36 "	6300 in²	82.3 PSF	65.0 PSF	74.1 PSF	58.5 PSF	72.0 PSF	56.9 PSF	64.9 PSF	51.2 PSF	61.7 PSF	48.7 PSF	55.7 PSF	43.9 PSF	51.4 PSF	40.6 PSF	46.4 PSF	36.6 PSF	247.00 LB-FT	225.2 LB	651.9 LB	516.4 LB
24 "			64.9 PSF	51.2 PSF	61.2 PSF	48.3 PSF	56.7 PSF	44.8 PSF	53.5 PSF	42.3 PSF	48.6 PSF	38.4 PSF	45.9 PSF	36.2 PSF	40.5 PSF	32.0 PSF	38.3 PSF	30.2 PSF	247.00 LB-FT	177.4 LB	569.8 LB	494.6 LB
30 "			53.9 PSF	42.5 PSF	53.9 PSF	42.5 PSF	47.1 PSF	37.2 PSF	47.1 PSF	37.2 PSF	40.4 PSF	31.9 PSF	40.4 PSF	31.9 PSF	33.7 PSF	26.6 PSF	33.7 PSF	26.6 PSF	247.00 LB-FT	147.4 LB	520.2 LB	482.9 LB
36 "			46.3 PSF	36.5 PSF	46.3 PSF	36.5 PSF	40.5 PSF	31.9 PSF	40.5 PSF	31.9 PSF	34.7 PSF	27.4 PSF	34.7 PSF	27.4 PSF	28.9 PSF	22.8 PSF	28.9 PSF	22.8 PSF	247.00 LB-FT	126.6 LB	486.9 LB	476.0 LB
18 "	42 "	8400 in²	61.7 PSF	48.7 PSF	55.0 PSF	43.4 PSF	54.0 PSF	42.6 PSF	48.2 PSF	38.0 PSF	46.3 PSF	36.5 PSF	41.3 PSF	32.6 PSF	38.6 PSF	30.4 PSF	34.5 PSF	27.2 PSF	247.00 LB-FT	225.2 LB	689.4 LB	553.9 LB
24 "			48.6 PSF	38.4 PSF	45.5 PSF	35.9 PSF	42.5 PSF	33.6 PSF	39.8 PSF	31.4 PSF	36.5 PSF	28.8 PSF	34.1 PSF	26.9 PSF	30.4 PSF	24.0 PSF	28.5 PSF	22.5 PSF	247.00 LB-FT	177.4 LB	599.3 LB	524.2 LB
30 "			40.4 PSF	31.9 PSF	40.4 PSF	31.9 PSF	35.3 PSF	27.9 PSF	35.3 PSF	27.9 PSF	30.3 PSF	23.9 PSF	30.3 PSF	23.9 PSF	25.2 PSF	19.9 PSF	25.2 PSF	19.9 PSF	247.00 LB-FT	147.4 LB	544.7 LB	507.5 LB
36 "			34.7 PSF	27.4 PSF	34.7 PSF	27.4 PSF	30.3 PSF	23.9 PSF	30.3 PSF	23.9 PSF	26.0 PSF	20.5 PSF	26.0 PSF	20.5 PSF	21.7 PSF	17.1 PSF	21.7 PSF	17.1 PSF	247.00 LB-FT	126.6 LB	508.0 LB	497.1 LB
18 "	48 "	11520 in²	45.0 PSF	35.5 PSF	39.7 PSF	31.3 PSF	39.4 PSF	31.1 PSF	34.8 PSF	27.4 PSF	33.7 PSF	26.6 PSF	29.8 PSF	23.5 PSF	28.1 PSF	22.2 PSF	24.9 PSF	19.6 PSF	247.00 LB-FT	225.2 LB	727.0 LB	591.5 LB
24 "			35.4 PSF	28.0 PSF	32.9 PSF	25.9 PSF	31.0 PSF	24.5 PSF	28.8 PSF	22.7 PSF	26.6 PSF	21.0 PSF	24.7 PSF	19.5 PSF	22.1 PSF	17.5 PSF	20.6 PSF	16.2 PSF	247.00 LB-FT	177.4 LB	628.9 LB	553.8 LB
30 "			29.4 PSF	23.2 PSF	29.4 PSF	23.2 PSF	25.8 PSF	20.3 PSF	25.8 PSF	20.3 PSF	22.1 PSF	17.4 PSF	22.1 PSF	17.4 PSF					247.00 LB-FT	147.4 LB	569.3 LB	509.6 LB
36 "			25.3 PSF	19.9 PSF	25.3 PSF	19.9 PSF	22.1 PSF	17.4 PSF	22.1 PSF	17.4 PSF									247.00 LB-FT	126.6 LB	529.1 LB	479.6 LB

24" STAND DEPTH: MAX FACE AREA (2208in² - 9216in²), FRAME QUANTITY (4-7 FRAMES)

UNIT TO FRAME RATIO

STAND CLEAR HEIGHT	MAX MEAN UNIT HEIGHT	MAX FACE AREA	MAX FACE AREA : 7 FRAMES				MAX FACE AREA : 6 FRAMES				MAX FACE AREA : 5 FRAMES				MAX FACE AREA : 4 FRAMES				LOAD TRANSFER INFORMATION FOR USE WITH HOST STRUCTURE VERIFICATION ONLY			
			ANCHOR TYPE: 1 OR 4		ANCHORS TYPE: 2 OR 3		ANCHOR TYPE: 1 OR 4		ANCHORS TYPE: 2 OR 3		ANCHOR TYPE: 1 OR 4		ANCHORS TYPE: 2 OR 3		ANCHOR TYPE: 1 OR 4		ANCHORS TYPE: 2 OR 3					
			MAX ALLOWABLE LATERAL LOAD	MAX ALLOWABLE UPLIFT	MAX ALLOWABLE LATERAL LOAD	MAX ALLOWABLE UPLIFT	MAX ALLOWABLE LATERAL LOAD	MAX ALLOWABLE UPLIFT	MAX ALLOWABLE LATERAL LOAD	MAX ALLOWABLE UPLIFT	MAX ALLOWABLE LATERAL LOAD	MAX ALLOWABLE UPLIFT	MAX ALLOWABLE LATERAL LOAD	MAX ALLOWABLE UPLIFT	MAX ALLOWABLE LATERAL LOAD	MAX ALLOWABLE UPLIFT	MAX ALLOWABLE LATERAL LOAD	MAX ALLOWABLE UPLIFT	MAX. BASE MOMENT (M)	MAX. BASE SHEAR (V)	MAX. BASE UPLIFT (T)	MAX. BASE GRAVITY (C)
18 "	24 "	2208 in²	200.0 PSF	157.8 PSF	187.4 PSF	147.9 PSF	188.9 PSF	149.1 PSF	160.7 PSF	126.9 PSF	157.4 PSF	124.3 PSF	134.0 PSF	105.8 PSF	125.9 PSF	99.4 PSF	107.4 PSF	84.7 PSF	247.00 LB-FT	241.4 LB	839.6 LB	684.6 LB
24 "			173.4 PSF	136.9 PSF	154.5 PSF	121.9 PSF	148.6 PSF	117.3 PSF	132.5 PSF	104.6 PSF	123.8 PSF	97.8 PSF	110.5 PSF	87.2 PSF	99.1 PSF	78.2 PSF	88.5 PSF	69.9 PSF	247.00 LB-FT	189.9 LB	754.5 LB	662.4 LB
30 "			142.9 PSF	112.8 PSF	142.9 PSF	112.8 PSF	122.5 PSF	96.7 PSF	122.5 PSF	96.7 PSF	102.0 PSF	80.6 PSF	102.0 PSF	80.6 PSF	81.6 PSF	64.4 PSF	81.6 PSF	64.4 PSF	245.70 LB-FT	156.5 LB	697.7 LB	647.8 LB
36 "			114.0 PSF	90.0 PSF	114.0 PSF	90.0 PSF	97.7 PSF	77.1 PSF	97.7 PSF	77.1 PSF	81.4 PSF	64.3 PSF	81.4 PSF	64.3 PSF	65.1 PSF	51.4 PSF	65.1 PSF	51.4 PSF	229.00 LB-FT	124.8 LB	616.5 LB	606.6 LB
18 "	30 "	3720 in²	130.8 PSF	103.3 PSF	109.5 PSF	86.4 PSF	112.1 PSF	88.5 PSF	93.9 PSF	74.1 PSF	93.4 PSF	73.7 PSF	78.3 PSF	61.8 PSF	74.7 PSF	59.0 PSF	62.7 PSF	49.5 PSF	247.00 LB-FT	241.4 LB	902.1 LB	745.0 LB
24 "			102.9 PSF	81.2 PSF	90.5 PSF	71.5 PSF	88.2 PSF	69.6 PSF	77.6 PSF	61.3 PSF	73.5 PSF	58.0 PSF	64.7 PSF	51.1 PSF	58.8 PSF	46.4 PSF	51.9 PSF	40.9 PSF	247.00 LB-FT	189.9 LB	802.0 LB	709.9 LB
30 "			84.8 PSF	66.9 PSF	84.8 PSF	66.9 PSF	72.7 PSF	57.4 PSF	72.7 PSF	57.4 PSF	60.5 PSF	47.8 PSF	60.5 PSF	47.8 PSF	48.4 PSF	38.2 PSF	48.4 PSF	38.2 PSF	245.70 LB-FT	156.5 LB	736.9 LB	687.0 LB
36 "			67.6 PSF	53.4 PSF	67.6 PSF	53.4 PSF	58.0 PSF	45.7 PSF	58.0 PSF	45.7 PSF	48.3 PSF	38.1 PSF	48.3 PSF	38.1 PSF	38.6 PSF	30.5 PSF	38.6 PSF	30.5 PSF	229.00 LB-FT	124.8 LB	647.7 LB	637.8 LB
18 "	36 "	5040 in²	96.5 PSF	76.2 PSF	79.6 PSF	62.8 PSF	82.7 PSF	65.3 PSF	68.3 PSF	53.9 PSF	68.9 PSF	54.4 PSF	56.9 PSF	44.9 PSF	55.1 PSF	43.5 PSF	45.6 PSF	36.0 PSF	247.00 LB-FT	241.4 LB	962.5 LB	805.3 LB
24 "			75.9 PSF	59.9 PSF	66.0 PSF	52.1 PSF	65.1 PSF	51.4 PSF	56.6 PSF	44.7 PSF	54.2 PSF	42.8 PSF	47.2 PSF	37.2 PSF	43.4 PSF	34.2 PSF	37.8 PSF	29.8 PSF	247.00 LB-FT	189.9 LB	849.4 LB	757.3 LB
30 "			62.6 PSF	49.4 PSF	62.6 PSF	49.4 PSF	53.6 PSF	42.3 PSF	53.6 PSF	42.3 PSF	44.7 PSF	35.3 PSF	44.7 PSF	35.3 PSF	35.7 PSF	28.2 PSF	35.7 PSF	28.2 PSF	245.70 LB-FT	156.5 LB	776.0 LB	726.1 LB
36 "			49.9 PSF	39.4 PSF	49.9 PSF	39.4 PSF	42.8 PSF	33.8 PSF	42.8 PSF	33.8 PSF	35.6 PSF	28.1 PSF	35.6 PSF	28.1 PSF	28.5 PSF	22.5 PSF	28.5 PSF	22.5 PSF	229.00 LB-FT	124.8 LB	678.9 LB	669.0 LB
18 "	42 "	6720 in²	72.0 PSF	56.8 PSF	58.8 PSF	46.4 PSF	61.7 PSF	48.7 PSF	50.4 PSF	39.8 PSF	51.5 PSF	40.6 PSF	42.1 PSF	33.2 PSF	41.2 PSF	32.5 PSF	33.7 PSF	26.6 PSF	246.30 LB-FT	240.7 LB	1017.0 LB	863.4 LB
24 "			56.9 PSF	44.9 PSF	48.9 PSF	38.6 PSF	48.8 PSF	38.5 PSF	41.9 PSF	33.1 PSF	40.7 PSF	32.1 PSF	34.9 PSF	27.6 PSF	32.5 PSF	25.7 PSF	28.0 PSF	22.1 PSF	247.00 LB-FT	189.9 LB	896.9 LB	804.8 LB
30 "			46.9 PSF	37.0 PSF	46.9 PSF	37.0 PSF	40.2 PSF	31.7 PSF	40.2 PSF	31.7 PSF	33.5 PSF	26.4 PSF	33.5 PSF	26.4 PSF	26.8 PSF	21.1 PSF	26.8 PSF	21.1 PSF	245.70 LB-FT	156.5 LB	815.1 LB	765.2 LB
36 "			37.4 PSF	29.5 PSF	37.4 PSF	29.5 PSF	32.1 PSF	25.3 PSF	32.1 PSF	25.3 PSF	26.7 PSF	21.1 PSF	26.7 PSF	21.1 PSF	21.4 PSF	16.9 PSF	21.4 PSF	16.9 PSF	229.00 LB-FT	124.8 LB	710.1 LB	700.2 LB
18 "	48 "	9216 in²	51.7 PSF	40.8 PSF	42.2 PSF	33.3 PSF	44.3 PSF	35.0 PSF	36.2 PSF	28.6 PSF	36.9 PSF	29.2 PSF	30.2 PSF	23.8 PSF	29.6 PSF	23.3 PSF	24.2 PSF	19.1 PSF	242.50 LB-FT	237.0 LB	1060.4 LB	911.5 LB
24 "			41.5 PSF	32.8 PSF	35.2 PSF	27.8 PSF	35.6 PSF	28.1 PSF	30.2 PSF	23.8 PSF	29.6 PSF	23.4 PSF	25.2 PSF	19.8 PSF	23.7 PSF	18.7 PSF	20.1 PSF	15.9 PSF	247.00 LB-FT	189.9 LB	944.4 LB	852.3 LB
30 "			34.2 PSF	27.0 PSF	34.2 PSF	27.0 PSF	29.3 PSF	23.1 PSF	29.3 PSF	23.1 PSF	24.4 PSF	19.3 PSF	24.4 PSF	19.3 PSF					245.70 LB-FT	156.5 LB	854.3 LB	777.4 LB
36 "			27.3 PSF	21.5 PSF	27.3 PSF	21.5 PSF	23.4 PSF	18.4 PSF	23.4 PSF	18.4 PSF									229.00 LB-FT	124.8 LB	741.4 LB	686.5 LB

FL 16921.1

ENGINEERING EXPRESS®
POSTAL ADDRESS:
2234 NORTH FEDERAL HWY #7664
BOCA RATON, FL 33431
ENGINEERINGEXPRESS.COM

PRECISION ALUMINUM PRODUCTS, INC.
1339 SW 1ST WAY
DEERFIELD BEACH, FL 33441
(954) 480-6919

ALUMINUM A/C STANDS
FLORIDA BUILDING CODE EIGHTH EDITION (2023)
FLORIDA STATEWIDE APPROVAL (FSA FL#16921.1)

REMARKS	DRWN	CHKD	DATE
PREV. SUBMITTAL (20-32768)	CSL	RWN	12/15/20
2023 FBC UPDATE & TECH. CHANGES	MRT	RWN	12/08/23

COPYRIGHT ENGINEERING EXPRESS®

23-69401

SCALE: NTS UNLESS NOTED

8 OF 18

12/21/2023 1:55 PM MILTON c:\users\milton\engineering express\production - documents\projects\23-\23-69401 2023 product fbc update fl16921\work\2023 fbc\drawings & cad\23-69401c - fl16921.1 - cad.dwg

"HD" STAND DESIGN SCHEDULE CONTINUED

DESIGN SCHEDULES NOTES:

1. DESIGN SCHEDULES SHOWN HEREIN ARE REFERENCED TO ALLOWABLE STRENGTH DESIGN (ASD) METHODOLOGY.
2. EMPTY CELLS DENOTES CONDITIONS NOT ALLOWED TO USE.
3. MAXIMUM CALCULATED FACE AREA SHALL BE EQUAL TO OR LESS THAN THE MAXIMUM ALLOWABLE FACE AREA FOR EACH CONFIGURATION.
4. REFERENCE ANCHOR SCHEDULE FOR ANCHOR TYPES LISTED HEREIN.

FRANK BENNARDO, P.E.
PE# 0046549 CA# 9885

FRANK L. BENNARDO LICENSE No PE0046549 STATE OF FLORIDA PROFESSIONAL ENGINEER

12/28/2023

DECEMBER 21, 2023

FL

36" STAND DEPTH: MAX FACE AREA (2208in² - 9216in²), FRAME QUANTITY (4-7 FRAMES)

STAND CLEAR HEIGHT	MAX MEAN UNIT HEIGHT	MAX FACE AREA	UNIT TO FRAME RATIO: MAX FACE AREA : 7 FRAMES, ANCHOR TYPE: 1 OR 4 — MAX ALLOWABLE LATERAL LOAD	MAX ALLOWABLE UPLIFT	ANCHORS TYPE: 2 OR 3 — MAX ALLOWABLE LATERAL LOAD	MAX ALLOWABLE UPLIFT	MAX FACE AREA : 6 FRAMES, ANCHOR TYPE: 1 OR 4 — MAX ALLOWABLE LATERAL LOAD	MAX ALLOWABLE UPLIFT	ANCHORS TYPE: 2 OR 3 — MAX ALLOWABLE LATERAL LOAD	MAX ALLOWABLE UPLIFT	MAX FACE AREA : 5 FRAMES, ANCHOR TYPE: 1 OR 4 — MAX ALLOWABLE LATERAL LOAD	MAX ALLOWABLE UPLIFT	ANCHORS TYPE: 2 OR 3 — MAX ALLOWABLE LATERAL LOAD	MAX ALLOWABLE UPLIFT	MAX FACE AREA : 4 FRAMES, ANCHOR TYPE: 1 OR 4 — MAX ALLOWABLE LATERAL LOAD	MAX ALLOWABLE UPLIFT	ANCHORS TYPE: 2 OR 3 — MAX ALLOWABLE LATERAL LOAD	MAX ALLOWABLE UPLIFT	LOAD TRANSFER INFORMATION FOR USE WITH HOST STRUCTURE VERIFICATION ONLY: MAX. BASE MOMENT (M)	MAX. BASE SHEAR (V)	MAX. BASE UPLIFT (T)	MAX. BASE GRAVITY (C)
18 "	24 "	2208 in²	200.0 PSF	157.8 PSF	188.9 PSF	149.1 PSF	176.3 PSF	139.1 PSF	162.0 PSF	127.9 PSF	146.9 PSF	115.9 PSF	135.1 PSF	106.7 PSF	117.5 PSF	92.7 PSF	108.2 PSF	85.4 PSF	247.00 LB-FT	225.2 LB	575.8 LB	441.3 LB
24 "			162.0 PSF	127.9 PSF	155.3 PSF	122.6 PSF	138.9 PSF	109.6 PSF	133.2 PSF	105.2 PSF	115.7 PSF	91.3 PSF	111.1 PSF	87.7 PSF	92.6 PSF	73.1 PSF	89.0 PSF	70.2 PSF	247.00 LB-FT	177.4 LB	511.8 LB	435.4 LB
30 "			134.6 PSF	106.3 PSF	134.6 PSF	106.3 PSF	115.4 PSF	91.1 PSF	115.4 PSF	91.1 PSF	96.1 PSF	75.9 PSF	96.1 PSF	75.9 PSF	76.9 PSF	60.7 PSF	76.9 PSF	60.7 PSF	247.00 LB-FT	147.4 LB	472.2 LB	433.8 LB
36 "			115.6 PSF	91.2 PSF	115.6 PSF	91.2 PSF	99.1 PSF	78.2 PSF	99.1 PSF	78.2 PSF	82.5 PSF	65.2 PSF	82.5 PSF	65.2 PSF	66.0 PSF	52.1 PSF	66.0 PSF	52.1 PSF	247.00 LB-FT	126.6 LB	445.9 LB	433.8 LB
18 "	30 "	3720 in²	122.0 PSF	96.3 PSF	111.0 PSF	87.6 PSF	104.6 PSF	82.6 PSF	95.2 PSF	75.1 PSF	87.2 PSF	68.8 PSF	79.4 PSF	62.6 PSF	69.7 PSF	55.0 PSF	63.6 PSF	50.2 PSF	247.00 LB-FT	225.2 LB	615.5 LB	478.8 LB
24 "			96.1 PSF	75.9 PSF	91.4 PSF	72.1 PSF	82.4 PSF	65.0 PSF	78.4 PSF	61.9 PSF	68.7 PSF	54.2 PSF	65.4 PSF	51.6 PSF	54.9 PSF	43.3 PSF	52.4 PSF	41.3 PSF	247.00 LB-FT	177.4 LB	541.4 LB	465.0 LB
30 "			79.9 PSF	63.0 PSF	79.9 PSF	63.0 PSF	68.5 PSF	54.0 PSF	68.5 PSF	54.0 PSF	57.0 PSF	45.0 PSF	57.0 PSF	45.0 PSF	45.6 PSF	36.0 PSF	45.6 PSF	36.0 PSF	247.00 LB-FT	147.4 LB	496.8 LB	458.4 LB
36 "			68.6 PSF	54.1 PSF	68.6 PSF	54.1 PSF	58.8 PSF	46.4 PSF	58.8 PSF	46.4 PSF	49.0 PSF	38.7 PSF	49.0 PSF	38.7 PSF	39.2 PSF	30.9 PSF	39.2 PSF	30.9 PSF	247.00 LB-FT	126.6 LB	467.0 LB	454.9 LB
18 "	36 "	5040 in²	90.1 PSF	71.1 PSF	81.1 PSF	64.0 PSF	77.2 PSF	60.9 PSF	69.5 PSF	54.9 PSF	64.3 PSF	50.8 PSF	58.0 PSF	45.8 PSF	51.4 PSF	40.6 PSF	46.4 PSF	36.6 PSF	247.00 LB-FT	225.2 LB	653.1 LB	516.4 LB
24 "			70.9 PSF	56.0 PSF	66.9 PSF	52.8 PSF	60.8 PSF	48.0 PSF	57.4 PSF	45.3 PSF	50.7 PSF	40.0 PSF	47.8 PSF	37.8 PSF	40.5 PSF	32.0 PSF	38.3 PSF	30.2 PSF	247.00 LB-FT	177.4 LB	571.0 LB	494.6 LB
30 "			58.9 PSF	46.5 PSF	58.9 PSF	46.5 PSF	50.5 PSF	39.9 PSF	50.5 PSF	39.9 PSF	42.1 PSF	33.2 PSF	42.1 PSF	33.2 PSF	33.7 PSF	26.6 PSF	33.7 PSF	26.6 PSF	247.00 LB-FT	147.4 LB	521.4 LB	482.9 LB
36 "			50.6 PSF	39.9 PSF	50.6 PSF	39.9 PSF	43.4 PSF	34.2 PSF	43.4 PSF	34.2 PSF	36.1 PSF	28.5 PSF	36.1 PSF	28.5 PSF	28.9 PSF	22.8 PSF	28.9 PSF	22.8 PSF	247.00 LB-FT	126.6 LB	488.1 LB	476.0 LB
18 "	42 "	6720 in²	67.5 PSF	53.3 PSF	60.2 PSF	47.5 PSF	57.9 PSF	45.7 PSF	51.6 PSF	40.7 PSF	48.2 PSF	38.1 PSF	43.0 PSF	34.0 PSF	38.6 PSF	30.4 PSF	34.5 PSF	27.2 PSF	247.00 LB-FT	225.2 LB	690.6 LB	553.9 LB
24 "			53.2 PSF	42.0 PSF	49.7 PSF	39.3 PSF	45.6 PSF	36.0 PSF	42.6 PSF	33.7 PSF	38.0 PSF	30.0 PSF	35.6 PSF	28.1 PSF	30.4 PSF	24.0 PSF	28.5 PSF	22.5 PSF	247.00 LB-FT	177.4 LB	600.5 LB	524.2 LB
30 "			44.2 PSF	34.9 PSF	44.2 PSF	34.9 PSF	37.9 PSF	29.9 PSF	37.9 PSF	29.9 PSF	31.6 PSF	24.9 PSF	31.6 PSF	24.9 PSF	25.2 PSF	19.9 PSF	25.2 PSF	19.9 PSF	247.00 LB-FT	147.4 LB	545.9 LB	507.5 LB
36 "			37.9 PSF	29.9 PSF	37.9 PSF	29.9 PSF	32.5 PSF	25.7 PSF	32.5 PSF	25.7 PSF	27.1 PSF	21.4 PSF	27.1 PSF	21.4 PSF	21.7 PSF	17.1 PSF	21.7 PSF	17.1 PSF	247.00 LB-FT	126.6 LB	509.2 LB	497.1 LB
18 "	48 "	9216 in²	49.2 PSF	38.9 PSF	43.4 PSF	34.3 PSF	42.2 PSF	33.3 PSF	37.2 PSF	29.4 PSF	35.2 PSF	27.7 PSF	31.1 PSF	24.5 PSF	28.1 PSF	22.2 PSF	24.9 PSF	19.6 PSF	247.00 LB-FT	225.2 LB	728.2 LB	591.5 LB
24 "			38.8 PSF	30.6 PSF	36.0 PSF	28.4 PSF	33.2 PSF	26.2 PSF	30.8 PSF	24.3 PSF	27.7 PSF	21.8 PSF	25.7 PSF	20.3 PSF	22.1 PSF	17.5 PSF	20.6 PSF	16.2 PSF	247.00 LB-FT	177.4 LB	630.1 LB	553.8 LB
30 "			32.2 PSF	25.4 PSF	32.2 PSF	25.4 PSF	27.6 PSF	21.8 PSF	27.6 PSF	21.8 PSF	23.0 PSF	18.1 PSF	23.0 PSF	18.1 PSF					247.00 LB-FT	147.4 LB	570.5 LB	505.1 LB
36 "			27.7 PSF	21.8 PSF	27.7 PSF	21.8 PSF	23.7 PSF	18.7 PSF	23.7 PSF	18.7 PSF									247.00 LB-FT	126.6 LB	530.3 LB	473.2 LB

24" STAND DEPTH: MAX FACE AREA (1656in² - 6912in²), FRAME QUANTITY (3-6 FRAMES)

STAND CLEAR HEIGHT	MAX MEAN UNIT HEIGHT	MAX FACE AREA	UNIT TO FRAME RATIO: MAX FACE AREA : 6 FRAMES, ANCHOR TYPE: 1 OR 4 — MAX ALLOWABLE LATERAL LOAD	MAX ALLOWABLE UPLIFT	ANCHORS TYPE: 2 OR 3 — MAX ALLOWABLE LATERAL LOAD	MAX ALLOWABLE UPLIFT	MAX FACE AREA : 5 FRAMES, ANCHOR TYPE: 1 OR 4 — MAX ALLOWABLE LATERAL LOAD	MAX ALLOWABLE UPLIFT	ANCHORS TYPE: 2 OR 3 — MAX ALLOWABLE LATERAL LOAD	MAX ALLOWABLE UPLIFT	MAX FACE AREA : 4 FRAMES, ANCHOR TYPE: 1 OR 4 — MAX ALLOWABLE LATERAL LOAD	MAX ALLOWABLE UPLIFT	ANCHORS TYPE: 2 OR 3 — MAX ALLOWABLE LATERAL LOAD	MAX ALLOWABLE UPLIFT	MAX FACE AREA : 3 FRAMES, ANCHOR TYPE: 1 OR 4 — MAX ALLOWABLE LATERAL LOAD	MAX ALLOWABLE UPLIFT	ANCHORS TYPE: 2 OR 3 — MAX ALLOWABLE LATERAL LOAD	MAX ALLOWABLE UPLIFT	LOAD TRANSFER INFORMATION FOR USE WITH HOST STRUCTURE VERIFICATION ONLY: MAX. BASE MOMENT (M)	MAX. BASE SHEAR (V)	MAX. BASE UPLIFT (T)	MAX. BASE GRAVITY (C)
18 "	24 "	1656 in²	200.0 PSF	157.8 PSF	200.0 PSF	157.8 PSF	200.0 PSF	157.8 PSF	178.5 PSF	140.9 PSF	167.9 PSF	132.6 PSF	142.9 PSF	112.8 PSF	125.9 PSF	99.4 PSF	107.4 PSF	84.7 PSF	247.00 LB-FT	241.4 LB	837.7 LB	684.6 LB
24 "			198.2 PSF	156.4 PSF	176.5 PSF	139.3 PSF	165.1 PSF	130.4 PSF	147.1 PSF	116.2 PSF	132.1 PSF	104.3 PSF	117.8 PSF	93.0 PSF	99.1 PSF	78.2 PSF	88.5 PSF	69.9 PSF	247.00 LB-FT	189.9 LB	756.1 LB	662.4 LB
30 "			163.3 PSF	128.9 PSF	163.3 PSF	128.9 PSF	136.1 PSF	107.4 PSF	136.1 PSF	107.4 PSF	108.9 PSF	85.9 PSF	108.9 PSF	85.9 PSF	81.6 PSF	64.4 PSF	81.6 PSF	64.4 PSF	245.70 LB-FT	156.5 LB	699.3 LB	647.8 LB
36 "			130.3 PSF	102.8 PSF	130.3 PSF	102.8 PSF	108.5 PSF	85.7 PSF	108.5 PSF	85.7 PSF	86.8 PSF	68.5 PSF	86.8 PSF	68.5 PSF	65.1 PSF	51.4 PSF	65.1 PSF	51.4 PSF	229.00 LB-FT	124.8 LB	618.1 LB	606.6 LB
18 "	30 "	2790 in²	149.5 PSF	118.0 PSF	125.1 PSF	98.7 PSF	124.6 PSF	98.3 PSF	104.3 PSF	82.3 PSF	99.7 PSF	78.7 PSF	83.5 PSF	65.9 PSF	74.7 PSF	59.0 PSF	62.7 PSF	49.5 PSF	247.00 LB-FT	241.4 LB	903.7 LB	745.0 LB
24 "			117.6 PSF	92.8 PSF	103.4 PSF	81.6 PSF	98.0 PSF	77.4 PSF	86.2 PSF	68.1 PSF	78.4 PSF	61.9 PSF	69.0 PSF	54.5 PSF	58.8 PSF	46.4 PSF	51.9 PSF	40.9 PSF	247.00 LB-FT	189.9 LB	803.6 LB	709.9 LB
30 "			96.9 PSF	76.5 PSF	96.9 PSF	76.5 PSF	80.7 PSF	63.7 PSF	80.7 PSF	63.7 PSF	64.6 PSF	51.0 PSF	64.6 PSF	51.0 PSF	48.4 PSF	38.2 PSF	48.4 PSF	38.2 PSF	245.70 LB-FT	156.5 LB	738.5 LB	687.0 LB
36 "			77.3 PSF	61.0 PSF	77.3 PSF	61.0 PSF	64.4 PSF	50.8 PSF	64.4 PSF	50.8 PSF	51.5 PSF	40.7 PSF	51.5 PSF	40.7 PSF	38.6 PSF	30.5 PSF	38.6 PSF	30.5 PSF	229.00 LB-FT	124.8 LB	649.3 LB	637.8 LB
18 "	36 "	3780 in²	110.3 PSF	87.1 PSF	90.9 PSF	71.8 PSF	91.9 PSF	72.6 PSF	75.8 PSF	59.9 PSF	73.5 PSF	58.0 PSF	60.7 PSF	47.9 PSF	55.1 PSF	43.5 PSF	45.6 PSF	36.0 PSF	247.00 LB-FT	241.4 LB	964.1 LB	805.3 LB
24 "			86.8 PSF	68.5 PSF	75.4 PSF	59.5 PSF	72.3 PSF	57.1 PSF	62.8 PSF	49.6 PSF	57.8 PSF	45.7 PSF	50.3 PSF	39.7 PSF	43.4 PSF	34.2 PSF	37.8 PSF	29.8 PSF	247.00 LB-FT	189.9 LB	851.1 LB	757.3 LB
30 "			71.5 PSF	56.4 PSF	71.5 PSF	56.4 PSF	59.6 PSF	47.0 PSF	59.6 PSF	47.0 PSF	47.7 PSF	37.6 PSF	47.7 PSF	37.6 PSF	35.7 PSF	28.2 PSF	35.7 PSF	28.2 PSF	245.70 LB-FT	156.5 LB	777.6 LB	726.1 LB
36 "			57.0 PSF	45.0 PSF	57.0 PSF	45.0 PSF	47.5 PSF	37.5 PSF	47.5 PSF	37.5 PSF	38.0 PSF	30.0 PSF	38.0 PSF	30.0 PSF	28.5 PSF	22.5 PSF	28.5 PSF	22.5 PSF	229.00 LB-FT	124.8 LB	680.5 LB	669.0 LB
18 "	42 "	5040 in²	82.2 PSF	64.9 PSF	67.2 PSF	53.0 PSF	68.6 PSF	54.1 PSF	56.0 PSF	44.2 PSF	54.9 PSF	43.3 PSF	44.9 PSF	35.4 PSF	41.2 PSF	32.5 PSF	33.7 PSF	26.6 PSF	246.30 LB-FT	240.7 LB	1018.2 LB	863.4 LB
24 "			65.1 PSF	51.4 PSF	55.8 PSF	44.1 PSF	54.2 PSF	42.8 PSF	46.5 PSF	36.7 PSF	43.4 PSF	34.2 PSF	37.3 PSF	29.4 PSF	32.5 PSF	25.7 PSF	28.0 PSF	22.1 PSF	247.00 LB-FT	189.9 LB	898.5 LB	804.8 LB
30 "			53.6 PSF	42.3 PSF	53.6 PSF	42.3 PSF	44.7 PSF	35.3 PSF	44.7 PSF	35.3 PSF	35.7 PSF	28.2 PSF	35.7 PSF	28.2 PSF	26.8 PSF	21.1 PSF	26.8 PSF	21.1 PSF	245.70 LB-FT	156.5 LB	816.7 LB	765.2 LB
36 "			42.8 PSF	33.8 PSF	42.8 PSF	33.8 PSF	35.6 PSF	28.1 PSF	35.6 PSF	28.1 PSF	28.5 PSF	22.5 PSF	28.5 PSF	22.5 PSF	21.4 PSF	16.9 PSF	21.4 PSF	16.9 PSF	229.00 LB-FT	124.8 LB	711.7 LB	700.2 LB
18 "	48 "	6912 in²	59.0 PSF	46.6 PSF	48.3 PSF	38.1 PSF	49.2 PSF	38.8 PSF	40.2 PSF	31.8 PSF	39.4 PSF	31.1 PSF	32.2 PSF	25.4 PSF	29.6 PSF	23.3 PSF	24.2 PSF	19.1 PSF	242.50 LB-FT	237.0 LB	1061.6 LB	911.5 LB
24 "			47.4 PSF	37.4 PSF	40.2 PSF	31.7 PSF	39.5 PSF	31.2 PSF	33.5 PSF	26.4 PSF	31.6 PSF	24.9 PSF	26.8 PSF	21.2 PSF	23.7 PSF	18.7 PSF	20.1 PSF	15.9 PSF	247.00 LB-FT	189.9 LB	946.0 LB	852.3 LB
30 "			39.1 PSF	30.8 PSF	39.1 PSF	30.8 PSF	32.6 PSF	25.7 PSF	32.6 PSF	25.7 PSF	26.0 PSF	20.5 PSF	26.0 PSF	20.5 PSF					245.70 LB-FT	156.5 LB	855.9 LB	770.6 LB
36 "			31.2 PSF	24.6 PSF	31.2 PSF	24.6 PSF	26.0 PSF	20.5 PSF	26.0 PSF	20.5 PSF	20.8 PSF	16.4 PSF	20.8 PSF	16.4 PSF					229.00 LB-FT	124.8 LB	743.0 LB	697.7 LB

36" STAND DEPTH: MAX FACE AREA (1656in² - 6912in²), FRAME QUANTITY (3-6 FRAMES)

STAND CLEAR HEIGHT	MAX MEAN UNIT HEIGHT	MAX FACE AREA	UNIT TO FRAME RATIO: MAX FACE AREA : 6 FRAMES, ANCHOR TYPE: 1 OR 4 — MAX ALLOWABLE LATERAL LOAD	MAX ALLOWABLE UPLIFT	ANCHORS TYPE: 2 OR 3 — MAX ALLOWABLE LATERAL LOAD	MAX ALLOWABLE UPLIFT	MAX FACE AREA : 5 FRAMES, ANCHOR TYPE: 1 OR 4 — MAX ALLOWABLE LATERAL LOAD	MAX ALLOWABLE UPLIFT	ANCHORS TYPE: 2 OR 3 — MAX ALLOWABLE LATERAL LOAD	MAX ALLOWABLE UPLIFT	MAX FACE AREA : 4 FRAMES, ANCHOR TYPE: 1 OR 4 — MAX ALLOWABLE LATERAL LOAD	MAX ALLOWABLE UPLIFT	ANCHORS TYPE: 2 OR 3 — MAX ALLOWABLE LATERAL LOAD	MAX ALLOWABLE UPLIFT	MAX FACE AREA : 3 FRAMES, ANCHOR TYPE: 1 OR 4 — MAX ALLOWABLE LATERAL LOAD	MAX ALLOWABLE UPLIFT	ANCHORS TYPE: 2 OR 3 — MAX ALLOWABLE LATERAL LOAD	MAX ALLOWABLE UPLIFT	LOAD TRANSFER INFORMATION FOR USE WITH HOST STRUCTURE VERIFICATION ONLY: MAX. BASE MOMENT (M)	MAX. BASE SHEAR (V)	MAX. BASE UPLIFT (T)	MAX. BASE GRAVITY (C)
18 "	24 "	1656 in²	200.0 PSF	157.8 PSF	200.0 PSF	157.8 PSF	195.9 PSF	154.6 PSF	179.9 PSF	142.1 PSF	156.7 PSF	123.7 PSF	144.1 PSF	113.7 PSF	117.5 PSF	92.7 PSF	108.2 PSF	85.4 PSF	247.00 LB-FT	225.2 LB	577.3 LB	441.3 LB
24 "			185.2 PSF	146.2 PSF	177.4 PSF	140.1 PSF	154.3 PSF	121.8 PSF	148.0 PSF	116.8 PSF	123.4 PSF	97.4 PSF	118.5 PSF	93.5 PSF	92.6 PSF	73.1 PSF	89.0 PSF	70.2 PSF	247.00 LB-FT	177.4 LB	513.4 LB	435.4 LB
30 "			153.8 PSF	121.4 PSF	153.8 PSF	121.4 PSF	128.2 PSF	101.2 PSF	128.2 PSF	101.2 PSF	102.5 PSF	80.9 PSF	102.5 PSF	80.9 PSF	76.9 PSF	60.7 PSF	76.9 PSF	60.7 PSF	247.00 LB-FT	147.4 LB	473.8 LB	433.8 LB
36 "			132.1 PSF	104.3 PSF	132.1 PSF	104.3 PSF	110.1 PSF	86.9 PSF	110.1 PSF	86.9 PSF	88.1 PSF	69.5 PSF	88.1 PSF	69.5 PSF	66.0 PSF	52.1 PSF	66.0 PSF	52.1 PSF	247.00 LB-FT	126.6 LB	447.5 LB	433.8 LB
18 "	30 "	2790 in²	139.5 PSF	110.1 PSF	126.8 PSF	100.1 PSF	116.2 PSF	91.7 PSF	105.7 PSF	83.4 PSF	93.0 PSF	73.4 PSF	84.6 PSF	66.8 PSF	69.7 PSF	55.0 PSF	63.6 PSF	50.2 PSF	247.00 LB-FT	225.2 LB	617.1 LB	478.8 LB
24 "			109.9 PSF	86.7 PSF	104.4 PSF	82.4 PSF	91.6 PSF	72.3 PSF	87.1 PSF	68.7 PSF	73.2 PSF	57.8 PSF	69.7 PSF	55.0 PSF	54.9 PSF	43.3 PSF	52.4 PSF	41.3 PSF	247.00 LB-FT	177.4 LB	543.0 LB	465.0 LB
30 "			91.3 PSF	72.1 PSF	91.3 PSF	72.1 PSF	76.1 PSF	60.0 PSF	76.1 PSF	60.0 PSF	60.8 PSF	48.0 PSF	60.8 PSF	48.0 PSF	45.6 PSF	36.0 PSF	45.6 PSF	36.0 PSF	247.00 LB-FT	147.4 LB	498.4 LB	458.4 LB
36 "			78.4 PSF	61.9 PSF	78.4 PSF	61.9 PSF	65.3 PSF	51.6 PSF	65.3 PSF	51.6 PSF	52.2 PSF	41.2 PSF	52.2 PSF	41.2 PSF	39.2 PSF	30.9 PSF	39.2 PSF	30.9 PSF	247.00 LB-FT	126.6 LB	468.6 LB	454.9 LB
18 "	36 "	3780 in²	102.9 PSF	81.3 PSF	92.6 PSF	73.1 PSF	85.8 PSF	67.7 PSF	77.2 PSF	60.9 PSF	68.6 PSF	54.2 PSF	61.8 PSF	48.8 PSF	51.4 PSF	40.6 PSF	46.4 PSF	36.6 PSF	247.00 LB-FT	225.2 LB	654.7 LB	516.4 LB
24 "			81.1 PSF	64.0 PSF	76.4 PSF	60.3 PSF	67.6 PSF	53.3 PSF	63.7 PSF	50.3 PSF	54.0 PSF	42.7 PSF	51.0 PSF	40.3 PSF	40.5 PSF	32.0 PSF	38.3 PSF	30.2 PSF	247.00 LB-FT	177.4 LB	572.6 LB	494.6 LB
30 "			67.4 PSF	53.2 PSF	67.4 PSF	53.2 PSF	56.1 PSF	44.3 PSF	56.1 PSF	44.3 PSF	44.9 PSF	35.4 PSF	44.9 PSF	35.4 PSF	33.7 PSF	26.6 PSF	33.7 PSF	26.6 PSF	247.00 LB-FT	147.4 LB	523.0 LB	482.9 LB
36 "			57.8 PSF	45.7 PSF	57.8 PSF	45.7 PSF	48.2 PSF	38.0 PSF	48.2 PSF	38.0 PSF	38.5 PSF	30.4 PSF	38.5 PSF	30.4 PSF	28.9 PSF	22.8 PSF	28.9 PSF	22.8 PSF	247.00 LB-FT	126.6 LB	489.7 LB	476.0 LB
18 "	42 "	5040 in²	77.2 PSF	60.9 PSF	68.7 PSF	54.3 PSF	64.3 PSF	50.8 PSF	57.3 PSF	45.2 PSF	51.4 PSF	40.6 PSF	45.9 PSF	36.2 PSF	38.6 PSF	30.4 PSF	34.5 PSF	27.2 PSF	247.00 LB-FT	225.2 LB	692.2 LB	553.9 LB
24 "			60.8 PSF	48.0 PSF	56.8 PSF	44.8 PSF	50.7 PSF	40.0 PSF	47.4 PSF	37.4 PSF	40.5 PSF	32.0 PSF	37.9 PSF	29.9 PSF	30.4 PSF	24.0 PSF	28.5 PSF	22.5 PSF	247.00 LB-FT	177.4 LB	602.1 LB	524.2 LB
30 "			50.5 PSF	39.9 PSF	50.5 PSF	39.9 PSF	42.1 PSF	33.2 PSF	42.1 PSF	33.2 PSF	33.7 PSF	26.6 PSF	33.7 PSF	26.6 PSF	25.2 PSF	19.9 PSF	25.2 PSF	19.9 PSF	247.00 LB-FT	147.4 LB	547.6 LB	507.5 LB
36 "			43.4 PSF	34.2 PSF	43.4 PSF	34.2 PSF	36.1 PSF	28.5 PSF	36.1 PSF	28.5 PSF	28.9 PSF	22.8 PSF	28.9 PSF	22.8 PSF	21.7 PSF	17.1 PSF	21.7 PSF	17.1 PSF	247.00 LB-FT	126.6 LB	510.8 LB	497.1 LB
18 "	48 "	6912 in²	56.3 PSF	44.4 PSF	49.6 PSF	39.2 PSF	46.9 PSF	37.0 PSF	41.4 PSF	32.6 PSF	37.5 PSF	29.6 PSF	33.1 PSF	26.1 PSF	28.1 PSF	22.2 PSF	24.9 PSF	19.6 PSF	247.00 LB-FT	225.2 LB	729.8 LB	591.5 LB
24 "			44.3 PSF	35.0 PSF	41.1 PSF	32.4 PSF	36.9 PSF	29.1 PSF	34.2 PSF	27.0 PSF	29.5 PSF	23.3 PSF	27.4 PSF	21.6 PSF	22.1 PSF	17.5 PSF	20.6 PSF	16.2 PSF	247.00 LB-FT	177.4 LB	631.7 LB	553.8 LB
30 "			36.8 PSF	29.1 PSF	36.8 PSF	29.1 PSF	30.7 PSF	24.2 PSF	30.7 PSF	24.2 PSF	24.5 PSF	19.4 PSF	24.5 PSF	19.4 PSF					247.00 LB-FT	147.4 LB	572.1 LB	498.4 LB
36 "			31.6 PSF	24.9 PSF	31.6 PSF	24.9 PSF	26.3 PSF	20.8 PSF	26.3 PSF	20.8 PSF	21.1 PSF	16.6 PSF	21.1 PSF	16.6 PSF					247.00 LB-FT	126.6 LB	531.9 LB	484.5 LB

FL 16921.1

ENGINEERING EXPRESS®
POSTAL ADDRESS:
2234 NORTH FEDERAL HWY #7664
BOCA RATON, FL 33431
ENGINEERINGEXPRESS.COM

PRECISION ALUMINUM PRODUCTS, INC.
1339 SW 1ST WAY
DEERFIELD BEACH, FL 33441
(954) 480-6919

ALUMINUM A/C STANDS
FLORIDA BUILDING CODE EIGHTH EDITION (2023)
FLORIDA STATEWIDE APPROVAL (FSA FL#16921.1)

REMARKS	DRWN	CHKD	DATE
PREV SUBMITTAL (20-32768)	CSL	RWN	12/15/20
2023 FBC UPDATE & TECH. CHANGES	MRT	RWN	12/08/23

COPYRIGHT ENGINEERING EXPRESS®

23-69401

SCALE: NTS UNLESS NOTED

12/21/2023 1:55 PM MILTON c:\users\milton\engineering express\production - documents\projects\23-\23-69401 2023 product fbc update fl16921\work\2023 fbc\drawings & cad\23-69401c - fl16921.1 - cad.dwg

"HD" STAND DESIGN SCHEDULE CONTINUED

DESIGN SCHEDULES NOTES:

1. DESIGN SCHEDULES SHOWN HEREIN ARE REFERENCED TO ALLOWABLE STRENGTH DESIGN (ASD) METHODOLOGY.
2. EMPTY CELLS DENOTES CONDITIONS NOT ALLOWED TO USE.
3. MAXIMUM CALCULATED FACE AREA SHALL BE EQUAL TO OR LESS THAN THE MAXIMUM ALLOWABLE FACE AREA FOR EACH CONFIGURATION.
4. REFERENCE ANCHOR SCHEDULE FOR ANCHOR TYPES LISTED HEREIN.

FRANK BENNARDO, P.E.
PE# 0046549 CA# 9885

FRANK L. BENNARDO LICENSE No PE0046549 STATE OF FLORIDA PROFESSIONAL ENGINEER
12/28/2023

DECEMBER 21, 2023

FL

24" STAND DEPTH: MAX FACE AREA (1104in² - 4608in²), FRAME QUANTITY (2-5 FRAMES)

STAND CLEAR HEIGHT	MAX MEAN UNIT HEIGHT	MAX FACE AREA	UNIT TO FRAME RATIO: MAX FACE AREA : 5 FRAMES — ANCHOR TYPE: 1 OR 4 — MAX ALLOWABLE LATERAL LOAD	MAX ALLOWABLE UPLIFT	ANCHORS TYPE: 2 OR 3 — MAX ALLOWABLE LATERAL LOAD	MAX ALLOWABLE UPLIFT	MAX FACE AREA : 4 FRAMES — ANCHOR TYPE: 1 OR 4 — MAX ALLOWABLE LATERAL LOAD	MAX ALLOWABLE UPLIFT	ANCHORS TYPE: 2 OR 3 — MAX ALLOWABLE LATERAL LOAD	MAX ALLOWABLE UPLIFT	MAX FACE AREA : 3 FRAMES — ANCHOR TYPE: 1 OR 4 — MAX ALLOWABLE LATERAL LOAD	MAX ALLOWABLE UPLIFT	ANCHORS TYPE: 2 OR 3 — MAX ALLOWABLE LATERAL LOAD	MAX ALLOWABLE UPLIFT	MAX FACE AREA : 2 FRAMES — ANCHOR TYPE: 1 OR 4 — MAX ALLOWABLE LATERAL LOAD	MAX ALLOWABLE UPLIFT	ANCHORS TYPE: 2 OR 3 — MAX ALLOWABLE LATERAL LOAD	MAX ALLOWABLE UPLIFT	LOAD TRANSFER INFORMATION FOR USE WITH HOST STRUCTURE VERIFICATION ONLY — MAX. BASE MOMENT (M)	MAX. BASE SHEAR (V)	MAX. BASE UPLIFT (T)	MAX. BASE GRAVITY (C)
18 "	24 "	1104 in²	200.0 PSF	157.8 PSF	200.0 PSF	157.8 PSF	200.0 PSF	157.8 PSF	200.0 PSF	157.8 PSF	188.9 PSF	149.1 PSF	160.7 PSF	126.9 PSF	125.9 PSF	99.4 PSF	107.4 PSF	84.7 PSF	247.00 LB-FT	241.4 LB	839.6 LB	684.6 LB
24 "			200.0 PSF	157.8 PSF	200.0 PSF	157.8 PSF	198.2 PSF	156.4 PSF	176.5 PSF	139.3 PSF	148.6 PSF	117.3 PSF	132.5 PSF	104.6 PSF	99.1 PSF	78.2 PSF	88.5 PSF	69.9 PSF	247.00 LB-FT	189.9 LB	756.1 LB	662.4 LB
30 "			200.0 PSF	157.8 PSF	200.0 PSF	157.8 PSF	163.3 PSF	128.9 PSF	163.3 PSF	128.9 PSF	122.5 PSF	96.7 PSF	122.5 PSF	96.7 PSF	81.6 PSF	64.4 PSF	81.6 PSF	64.4 PSF	245.70 LB-FT	156.5 LB	699.3 LB	647.8 LB
36 "			162.8 PSF	128.6 PSF	162.8 PSF	128.6 PSF	130.3 PSF	102.8 PSF	130.3 PSF	102.8 PSF	97.7 PSF	77.1 PSF	97.7 PSF	77.1 PSF	65.1 PSF	51.4 PSF	65.1 PSF	51.4 PSF	229.00 LB-FT	124.8 LB	620.3 LB	606.6 LB
18 "	30 "	1860 in²	186.9 PSF	147.5 PSF	156.3 PSF	123.4 PSF	149.5 PSF	118.0 PSF	125.1 PSF	98.7 PSF	112.1 PSF	88.5 PSF	93.9 PSF	74.1 PSF	74.7 PSF	59.0 PSF	62.7 PSF	49.5 PSF	247.00 LB-FT	241.4 LB	906.0 LB	745.0 LB
24 "			147.0 PSF	116.1 PSF	129.2 PSF	102.0 PSF	117.6 PSF	92.8 PSF	103.4 PSF	81.6 PSF	88.2 PSF	69.6 PSF	77.6 PSF	61.3 PSF	58.8 PSF	46.4 PSF	51.9 PSF	40.9 PSF	247.00 LB-FT	189.9 LB	805.8 LB	709.9 LB
30 "			121.1 PSF	95.6 PSF	121.1 PSF	95.6 PSF	96.9 PSF	76.5 PSF	96.9 PSF	76.5 PSF	72.7 PSF	57.4 PSF	72.7 PSF	57.4 PSF	48.4 PSF	38.2 PSF	48.4 PSF	38.2 PSF	245.70 LB-FT	156.5 LB	740.7 LB	687.0 LB
36 "			96.6 PSF	76.3 PSF	96.6 PSF	76.3 PSF	77.3 PSF	61.0 PSF	77.3 PSF	61.0 PSF	58.0 PSF	45.7 PSF	58.0 PSF	45.7 PSF	38.6 PSF	30.5 PSF	38.6 PSF	30.5 PSF	229.00 LB-FT	124.8 LB	651.5 LB	637.8 LB
18 "	36 "	2520 in²	137.9 PSF	108.9 PSF	113.6 PSF	89.7 PSF	110.3 PSF	87.1 PSF	90.9 PSF	71.8 PSF	82.7 PSF	65.3 PSF	68.3 PSF	53.9 PSF	55.1 PSF	43.5 PSF	45.6 PSF	36.0 PSF	247.00 LB-FT	241.4 LB	966.3 LB	805.3 LB
24 "			108.5 PSF	85.6 PSF	94.2 PSF	74.3 PSF	86.8 PSF	68.5 PSF	75.4 PSF	59.5 PSF	65.1 PSF	51.4 PSF	56.6 PSF	44.7 PSF	43.4 PSF	34.2 PSF	37.8 PSF	29.8 PSF	247.00 LB-FT	189.9 LB	853.3 LB	757.3 LB
30 "			89.4 PSF	70.6 PSF	89.4 PSF	70.6 PSF	71.5 PSF	56.4 PSF	71.5 PSF	56.4 PSF	53.6 PSF	42.3 PSF	53.6 PSF	42.3 PSF	35.7 PSF	28.2 PSF	35.7 PSF	28.2 PSF	245.70 LB-FT	156.5 LB	779.9 LB	726.1 LB
36 "			71.3 PSF	56.3 PSF	71.3 PSF	56.3 PSF	57.0 PSF	45.0 PSF	57.0 PSF	45.0 PSF	42.8 PSF	33.8 PSF	42.8 PSF	33.8 PSF	28.5 PSF	22.5 PSF	28.5 PSF	22.5 PSF	229.00 LB-FT	124.8 LB	682.8 LB	669.0 LB
18 "	42 "	3360 in²	102.8 PSF	81.1 PSF	83.9 PSF	66.3 PSF	82.2 PSF	64.9 PSF	67.2 PSF	53.0 PSF	61.7 PSF	48.7 PSF	50.4 PSF	39.8 PSF	41.2 PSF	32.5 PSF	33.7 PSF	26.6 PSF	246.30 LB-FT	240.7 LB	1019.9 LB	863.4 LB
24 "			81.4 PSF	64.2 PSF	69.7 PSF	55.0 PSF	65.1 PSF	51.4 PSF	55.8 PSF	44.1 PSF	48.8 PSF	38.5 PSF	41.9 PSF	33.1 PSF	32.5 PSF	25.7 PSF	28.0 PSF	22.1 PSF	247.00 LB-FT	189.9 LB	900.8 LB	804.8 LB
30 "			67.0 PSF	52.9 PSF	67.0 PSF	52.9 PSF	53.6 PSF	42.3 PSF	53.6 PSF	42.3 PSF	40.2 PSF	31.7 PSF	40.2 PSF	31.7 PSF	26.8 PSF	21.1 PSF	26.8 PSF	21.1 PSF	245.70 LB-FT	156.5 LB	819.0 LB	765.2 LB
36 "			53.5 PSF	42.2 PSF	53.5 PSF	42.2 PSF	42.8 PSF	33.8 PSF	42.8 PSF	33.8 PSF	32.1 PSF	25.3 PSF	32.1 PSF	25.3 PSF	21.4 PSF	16.9 PSF	21.4 PSF	16.9 PSF	229.00 LB-FT	124.8 LB	714.0 LB	700.2 LB
18 "	48 "	4608 in²	73.8 PSF	58.2 PSF	60.3 PSF	47.6 PSF	59.0 PSF	46.6 PSF	48.3 PSF	38.1 PSF	44.3 PSF	35.0 PSF	36.2 PSF	28.6 PSF	29.6 PSF	23.3 PSF	24.2 PSF	19.1 PSF	242.50 LB-FT	237.0 LB	1063.2 LB	911.5 LB
24 "			59.3 PSF	46.8 PSF	50.2 PSF	39.6 PSF	47.4 PSF	37.4 PSF	40.2 PSF	31.7 PSF	35.6 PSF	28.1 PSF	30.2 PSF	23.8 PSF	23.7 PSF	18.7 PSF	20.1 PSF	15.9 PSF	247.00 LB-FT	189.9 LB	948.3 LB	852.3 LB
30 "			48.9 PSF	38.6 PSF	48.9 PSF	38.6 PSF	39.1 PSF	30.8 PSF	39.1 PSF	30.8 PSF	29.3 PSF	23.1 PSF	29.3 PSF	23.1 PSF					245.70 LB-FT	156.5 LB	858.1 LB	759.4 LB
36 "			39.0 PSF	30.8 PSF	39.0 PSF	30.8 PSF	31.2 PSF	24.6 PSF	31.2 PSF	24.6 PSF	23.4 PSF	18.4 PSF	23.4 PSF	18.4 PSF					229.00 LB-FT	124.8 LB	745.2 LB	686.5 LB

36" STAND DEPTH: MAX FACE AREA (1104in² - 4608in²), FRAME QUANTITY (2-5 FRAMES)

STAND CLEAR HEIGHT	MAX MEAN UNIT HEIGHT	MAX FACE AREA	UNIT TO FRAME RATIO: MAX FACE AREA : 5 FRAMES — ANCHOR TYPE: 1 OR 4 — MAX ALLOWABLE LATERAL LOAD	MAX ALLOWABLE UPLIFT	ANCHORS TYPE: 2 OR 3 — MAX ALLOWABLE LATERAL LOAD	MAX ALLOWABLE UPLIFT	MAX FACE AREA : 4 FRAMES — ANCHOR TYPE: 1 OR 4 — MAX ALLOWABLE LATERAL LOAD	MAX ALLOWABLE UPLIFT	ANCHORS TYPE: 2 OR 3 — MAX ALLOWABLE LATERAL LOAD	MAX ALLOWABLE UPLIFT	MAX FACE AREA : 3 FRAMES — ANCHOR TYPE: 1 OR 4 — MAX ALLOWABLE LATERAL LOAD	MAX ALLOWABLE UPLIFT	ANCHORS TYPE: 2 OR 3 — MAX ALLOWABLE LATERAL LOAD	MAX ALLOWABLE UPLIFT	MAX FACE AREA : 2 FRAMES — ANCHOR TYPE: 1 OR 4 — MAX ALLOWABLE LATERAL LOAD	MAX ALLOWABLE UPLIFT	ANCHORS TYPE: 2 OR 3 — MAX ALLOWABLE LATERAL LOAD	MAX ALLOWABLE UPLIFT	LOAD TRANSFER INFORMATION FOR USE WITH HOST STRUCTURE VERIFICATION ONLY — MAX. BASE MOMENT (M)	MAX. BASE SHEAR (V)	MAX. BASE UPLIFT (T)	MAX. BASE GRAVITY (C)
18 "	24 "	1104 in²	200.0 PSF	157.8 PSF	200.0 PSF	157.8 PSF	200.0 PSF	157.8 PSF	200.0 PSF	157.8 PSF	176.3 PSF	139.1 PSF	162.0 PSF	127.9 PSF	117.5 PSF	92.7 PSF	108.2 PSF	85.4 PSF	247.00 LB-FT	225.2 LB	575.8 LB	441.3 LB
24 "			200.0 PSF	157.8 PSF	200.0 PSF	157.8 PSF	185.2 PSF	146.2 PSF	177.4 PSF	140.1 PSF	138.9 PSF	109.6 PSF	133.2 PSF	105.2 PSF	92.6 PSF	73.1 PSF	89.0 PSF	70.2 PSF	247.00 LB-FT	177.4 LB	513.4 LB	435.4 LB
30 "			192.3 PSF	151.8 PSF	192.3 PSF	151.8 PSF	153.8 PSF	121.4 PSF	153.8 PSF	121.4 PSF	115.4 PSF	91.1 PSF	115.4 PSF	91.1 PSF	76.9 PSF	60.7 PSF	76.9 PSF	60.7 PSF	247.00 LB-FT	147.4 LB	476.1 LB	433.8 LB
36 "			165.1 PSF	130.4 PSF	165.1 PSF	130.4 PSF	132.1 PSF	104.3 PSF	132.1 PSF	104.3 PSF	99.1 PSF	78.2 PSF	99.1 PSF	78.2 PSF	66.0 PSF	52.1 PSF	66.0 PSF	52.1 PSF	247.00 LB-FT	126.6 LB	449.8 LB	433.8 LB
18 "	30 "	1860 in²	174.4 PSF	137.6 PSF	158.3 PSF	125.0 PSF	139.5 PSF	110.1 PSF	126.8 PSF	100.1 PSF	104.6 PSF	82.6 PSF	95.2 PSF	75.1 PSF	69.7 PSF	55.0 PSF	63.6 PSF	50.2 PSF	247.00 LB-FT	225.2 LB	619.4 LB	478.8 LB
24 "			137.4 PSF	108.4 PSF	130.4 PSF	103.0 PSF	109.9 PSF	86.7 PSF	104.4 PSF	82.4 PSF	82.4 PSF	65.0 PSF	78.4 PSF	61.9 PSF	54.9 PSF	43.3 PSF	52.4 PSF	41.3 PSF	247.00 LB-FT	177.4 LB	545.2 LB	465.0 LB
30 "			114.1 PSF	90.1 PSF	114.1 PSF	90.1 PSF	91.3 PSF	72.1 PSF	91.3 PSF	72.1 PSF	68.5 PSF	54.0 PSF	68.5 PSF	54.0 PSF	45.6 PSF	36.0 PSF	45.6 PSF	36.0 PSF	247.00 LB-FT	147.4 LB	500.6 LB	458.4 LB
36 "			98.0 PSF	77.4 PSF	98.0 PSF	77.4 PSF	78.4 PSF	61.9 PSF	78.4 PSF	61.9 PSF	58.8 PSF	46.4 PSF	58.8 PSF	46.4 PSF	39.2 PSF	30.9 PSF	39.2 PSF	30.9 PSF	247.00 LB-FT	126.6 LB	470.9 LB	454.9 LB
18 "	36 "	2520 in²	128.7 PSF	101.6 PSF	115.7 PSF	91.3 PSF	102.9 PSF	81.3 PSF	92.6 PSF	73.1 PSF	77.2 PSF	60.9 PSF	69.5 PSF	54.9 PSF	51.4 PSF	40.6 PSF	46.4 PSF	36.6 PSF	247.00 LB-FT	225.2 LB	656.9 LB	516.4 LB
24 "			101.4 PSF	80.0 PSF	95.5 PSF	75.4 PSF	81.1 PSF	64.0 PSF	76.4 PSF	60.3 PSF	60.8 PSF	48.0 PSF	57.4 PSF	45.3 PSF	40.5 PSF	32.0 PSF	38.3 PSF	30.2 PSF	247.00 LB-FT	177.4 LB	574.8 LB	494.6 LB
30 "			84.2 PSF	66.5 PSF	84.2 PSF	66.5 PSF	67.4 PSF	53.2 PSF	67.4 PSF	53.2 PSF	50.5 PSF	39.9 PSF	50.5 PSF	39.9 PSF	33.7 PSF	26.6 PSF	33.7 PSF	26.6 PSF	247.00 LB-FT	147.4 LB	525.2 LB	482.9 LB
36 "			72.3 PSF	57.1 PSF	72.3 PSF	57.1 PSF	57.8 PSF	45.7 PSF	57.8 PSF	45.7 PSF	43.4 PSF	34.2 PSF	43.4 PSF	34.2 PSF	28.9 PSF	22.8 PSF	28.9 PSF	22.8 PSF	247.00 LB-FT	126.6 LB	492.0 LB	476.0 LB
18 "	42 "	3360 in²	96.5 PSF	76.2 PSF	85.9 PSF	67.8 PSF	77.2 PSF	60.9 PSF	68.7 PSF	54.3 PSF	57.9 PSF	45.7 PSF	51.6 PSF	40.7 PSF	38.6 PSF	30.4 PSF	34.5 PSF	27.2 PSF	247.00 LB-FT	225.2 LB	694.5 LB	553.9 LB
24 "			76.0 PSF	60.0 PSF	71.0 PSF	56.0 PSF	60.8 PSF	48.0 PSF	56.8 PSF	44.8 PSF	45.6 PSF	36.0 PSF	42.6 PSF	33.7 PSF	30.4 PSF	24.0 PSF	28.5 PSF	22.5 PSF	247.00 LB-FT	177.4 LB	604.4 LB	524.2 LB
30 "			63.2 PSF	49.8 PSF	63.2 PSF	49.8 PSF	50.5 PSF	39.9 PSF	50.5 PSF	39.9 PSF	37.9 PSF	29.9 PSF	37.9 PSF	29.9 PSF	25.2 PSF	19.9 PSF	25.2 PSF	19.9 PSF	247.00 LB-FT	147.4 LB	549.8 LB	507.5 LB
36 "			54.2 PSF	42.8 PSF	54.2 PSF	42.8 PSF	43.4 PSF	34.2 PSF	43.4 PSF	34.2 PSF	32.5 PSF	25.7 PSF	32.5 PSF	25.7 PSF	21.7 PSF	17.1 PSF	21.7 PSF	17.1 PSF	247.00 LB-FT	126.6 LB	513.1 LB	497.1 LB
18 "	48 "	4608 in²	70.4 PSF	55.5 PSF	62.0 PSF	48.9 PSF	56.3 PSF	44.4 PSF	49.6 PSF	39.2 PSF	42.2 PSF	33.3 PSF	37.2 PSF	29.4 PSF	28.1 PSF	22.2 PSF	24.9 PSF	19.6 PSF	247.00 LB-FT	225.2 LB	732.0 LB	591.5 LB
24 "			55.4 PSF	43.7 PSF	51.3 PSF	40.5 PSF	44.3 PSF	35.0 PSF	41.1 PSF	32.4 PSF	33.2 PSF	26.2 PSF	30.8 PSF	24.3 PSF	22.1 PSF	17.5 PSF	20.6 PSF	16.2 PSF	247.00 LB-FT	177.4 LB	634.0 LB	553.8 LB
30 "			46.0 PSF	36.3 PSF	46.0 PSF	36.3 PSF	36.8 PSF	29.1 PSF	36.8 PSF	29.1 PSF	27.6 PSF	21.8 PSF	27.6 PSF	21.8 PSF					247.00 LB-FT	147.4 LB	574.4 LB	487.1 LB
36 "			39.5 PSF	31.2 PSF	39.5 PSF	31.2 PSF	31.6 PSF	24.9 PSF	31.6 PSF	24.9 PSF	23.7 PSF	18.7 PSF	23.7 PSF	18.7 PSF					247.00 LB-FT	126.6 LB	534.2 LB	473.2 LB

24" STAND DEPTH: MAX FACE AREA (552in² - 2304in²), FRAME QUANTITY (2-3 FRAMES)

STAND CLEAR HEIGHT	MAX MEAN UNIT HEIGHT	MAX FACE AREA	UNIT TO FRAME RATIO: MAX FACE AREA : 3 FRAMES — ANCHOR TYPE: 1 OR 4 — MAX ALLOWABLE LATERAL LOAD	MAX ALLOWABLE UPLIFT	ANCHOR TYPE: 2 OR 3 — MAX ALLOWABLE LATERAL LOAD	MAX ALLOWABLE UPLIFT	MAX FACE AREA : 2 FRAMES — ANCHOR TYPE: 1 OR 4 — MAX ALLOWABLE LATERAL LOAD	MAX ALLOWABLE UPLIFT	ANCHOR TYPE: 2 OR 3 — MAX ALLOWABLE LATERAL LOAD	MAX ALLOWABLE UPLIFT	LOAD TRANSFER INFORMATION FOR USE WITH HOST STRUCTURE VERIFICATION ONLY — MAX. BASE MOMENT (M)	MAX. BASE SHEAR (V)	MAX. BASE UPLIFT (T)	MAX. BASE GRAVITY (C)
18 "	24 "	552 in²	200.0 PSF	157.8 PSF	200.0 PSF	157.8 PSF	200.0 PSF	157.8 PSF	200.0 PSF	157.8 PSF	196.10 LB-FT	191.6 LB	667.1 LB	503.7 LB
24 "			200.0 PSF	157.8 PSF	200.0 PSF	157.8 PSF	198.2 PSF	156.4 PSF	176.5 PSF	139.3 PSF	247.00 LB-FT	189.9 LB	756.1 LB	594.9 LB
30 "			200.0 PSF	157.8 PSF	200.0 PSF	157.8 PSF	163.3 PSF	128.9 PSF	163.3 PSF	128.9 PSF	245.70 LB-FT	156.5 LB	699.3 LB	580.3 LB
36 "			195.4 PSF	154.3 PSF	195.4 PSF	154.3 PSF	130.3 PSF	102.8 PSF	130.3 PSF	102.8 PSF	229.00 LB-FT	124.8 LB	621.8 LB	539.1 LB
18 "	30 "	930 in²	200.0 PSF	157.8 PSF	187.5 PSF	148.0 PSF	149.5 PSF	118.0 PSF	125.1 PSF	98.7 PSF	247.00 LB-FT	241.4 LB	903.7 LB	677.5 LB
24 "			176.4 PSF	139.3 PSF	155.0 PSF	122.3 PSF	117.6 PSF	92.8 PSF	103.4 PSF	81.6 PSF	247.00 LB-FT	189.9 LB	807.3 LB	642.4 LB
30 "			145.4 PSF	114.8 PSF	145.4 PSF	114.8 PSF	96.9 PSF	76.5 PSF	96.9 PSF	76.5 PSF	245.70 LB-FT	156.5 LB	742.2 LB	619.5 LB
36 "			116.0 PSF	91.5 PSF	116.0 PSF	91.5 PSF	77.3 PSF	61.0 PSF	77.3 PSF	61.0 PSF	229.00 LB-FT	124.8 LB	653.0 LB	570.3 LB
18 "	36 "	1260 in²	165.5 PSF	130.7 PSF	136.3 PSF	107.6 PSF	110.3 PSF	87.1 PSF	90.9 PSF	71.8 PSF	247.00 LB-FT	241.4 LB	967.8 LB	737.8 LB
24 "			130.2 PSF	102.8 PSF	112.9 PSF	89.2 PSF	86.8 PSF	68.5 PSF	75.4 PSF	59.5 PSF	247.00 LB-FT	189.9 LB	854.8 LB	689.8 LB
30 "			107.3 PSF	84.7 PSF	107.3 PSF	84.7 PSF	71.5 PSF	56.4 PSF	71.5 PSF	56.4 PSF	245.70 LB-FT	156.5 LB	781.4 LB	658.6 LB
36 "			85.6 PSF	67.6 PSF	85.6 PSF	67.6 PSF	57.0 PSF	45.0 PSF	57.0 PSF	45.0 PSF	229.00 LB-FT	124.8 LB	684.3 LB	601.5 LB
18 "	42 "	1680 in²	123.3 PSF	97.3 PSF	100.7 PSF	79.5 PSF	82.2 PSF	64.9 PSF	67.2 PSF	53.0 PSF	245.60 LB-FT	240.0 LB	1021.0 LB	793.8 LB
24 "			97.6 PSF	77.1 PSF	83.7 PSF	66.0 PSF	65.1 PSF	51.4 PSF	55.8 PSF	44.1 PSF	247.00 LB-FT	189.9 LB	902.3 LB	737.3 LB
30 "			80.5 PSF	63.5 PSF	80.5 PSF	63.5 PSF	53.6 PSF	42.3 PSF	53.6 PSF	42.3 PSF	245.70 LB-FT	156.5 LB	820.5 LB	697.8 LB
36 "			64.2 PSF	50.7 PSF	64.2 PSF	50.7 PSF	42.8 PSF	33.8 PSF	42.8 PSF	33.8 PSF	229.00 LB-FT	124.8 LB	715.5 LB	632.7 LB
18 "	48 "	2304 in²	88.5 PSF	69.9 PSF	72.3 PSF	57.1 PSF	59.0 PSF	46.6 PSF	48.3 PSF	38.1 PSF	241.80 LB-FT	236.3 LB	1064.3 LB	841.8 LB
24 "			71.2 PSF	56.2 PSF	60.3 PSF	47.6 PSF	47.4 PSF	37.4 PSF	40.2 PSF	31.7 PSF	247.00 LB-FT	189.9 LB	949.8 LB	784.8 LB
30 "			58.7 PSF	46.3 PSF	58.7 PSF	46.3 PSF	39.1 PSF	30.8 PSF	39.1 PSF	30.8 PSF	245.70 LB-FT	156.5 LB	859.6 LB	736.9 LB
36 "			46.8 PSF	36.9 PSF	46.8 PSF	36.9 PSF	31.2 PSF	24.6 PSF	31.2 PSF	24.6 PSF	229.00 LB-FT	124.8 LB	746.7 LB	664.0 LB

FL 16921.1

ENGINEERING EXPRESS®
POSTAL ADDRESS:
2234 NORTH FEDERAL HWY #7664
BOCA RATON, FL 33431
ENGINEERINGEXPRESS.COM

PRECISION ALUMINUM PRODUCTS, INC.
1339 SW 1ST WAY
DEERFIELD BEACH, FL 33441
(954) 480-6919

ALUMINUM A/C STANDS
FLORIDA BUILDING CODE EIGHTH EDITION (2023)
FLORIDA STATEWIDE APPROVAL (FSA FL#16921.1)

REMARKS	DRWN	CHKD	DATE
PREV. SUBMITTAL (20-32768)	CSL	RWN	12/15/20
2023 FBC UPDATE & TECH. CHANGES	MRT	RWN	12/08/23

COPYRIGHT ENGINEERING EXPRESS®

23-69401

SCALE: NTS UNLESS NOTED

12/21/2023 1:55 PM MILTON c:\users\milton\engineering express\production - documents\projects\23-\23-69401 2023 product fbc update fl16921\work\2023 fbc\drawings & cad\23-69401c - fl16921.1 - cad.dwg

"HD" STAND DESIGN SCHEDULE CONTINUED

DESIGN SCHEDULES NOTES:

1. DESIGN SCHEDULES SHOWN HEREIN ARE REFERENCED TO ALLOWABLE STRENGTH DESIGN (ASD) METHODOLOGY.

2. EMPTY CELLS DENOTES CONDITIONS NOT ALLOWED TO USE.

3. MAXIMUM CALCULATED FACE AREA SHALL BE EQUAL TO OR LESS THAN THE MAXIMUM ALLOWABLE FACE AREA FOR EACH CONFIGURATION.

4. REFERENCE ANCHOR SCHEDULE FOR ANCHOR TYPES LISTED HEREIN.

36" STAND DEPTH: MAX FACE AREA (552in² - 2304in²), FRAME QUANTITY (2-3 FRAMES)

STAND CLEAR HEIGHT	MAX MEAN UNIT HEIGHT	MAX FACE AREA	UNIT TO FRAME RATIO: MAX FACE AREA : 3 FRAMES, ANCHOR TYPE: 1 OR 4 — MAX ALLOWABLE LATERAL LOAD	MAX ALLOWABLE UPLIFT	ANCHOR TYPE: 2 OR 3 — MAX ALLOWABLE LATERAL LOAD	MAX ALLOWABLE UPLIFT	MAX FACE AREA : 2 FRAMES, ANCHOR TYPE: 1 OR 4 — MAX ALLOWABLE LATERAL LOAD	MAX ALLOWABLE UPLIFT	ANCHOR TYPE: 2 OR 3 — MAX ALLOWABLE LATERAL LOAD	MAX ALLOWABLE UPLIFT	LOAD TRANSFER INFORMATION FOR USE WITH HOST STRUCTURE VERIFICATION ONLY: MAX. BASE MOMENT (M)	MAX. BASE SHEAR (V)	MAX. BASE UPLIFT (T)	MAX. BASE GRAVITY (C)
18 "	24 "	552 in²	200.0 PSF	157.8 PSF	200.0 PSF	157.8 PSF	200.0 PSF	157.8 PSF	200.0 PSF	157.8 PSF	210.20 LB-FT	191.6 LB	491.4 LB	328.0 LB
24 "			200.0 PSF	157.8 PSF	200.0 PSF	157.8 PSF	185.2 PSF	146.2 PSF	177.4 PSF	140.1 PSF	247.00 LB-FT	177.4 LB	513.4 LB	367.9 LB
30 "			200.0 PSF	157.8 PSF	200.0 PSF	157.8 PSF	153.8 PSF	121.4 PSF	153.8 PSF	121.4 PSF	247.00 LB-FT	147.4 LB	473.8 LB	366.3 LB
36 "			198.2 PSF	156.4 PSF	198.2 PSF	156.4 PSF	132.1 PSF	104.3 PSF	132.1 PSF	104.3 PSF	247.00 LB-FT	126.6 LB	451.3 LB	366.3 LB
18 "	30 "	930 in²	200.0 PSF	157.8 PSF	189.9 PSF	149.9 PSF	139.5 PSF	110.1 PSF	126.8 PSF	100.1 PSF	247.00 LB-FT	225.2 LB	617.1 LB	411.3 LB
24 "			164.8 PSF	130.1 PSF	156.5 PSF	123.5 PSF	109.9 PSF	86.7 PSF	104.4 PSF	82.4 PSF	247.00 LB-FT	177.4 LB	546.7 LB	397.5 LB
30 "			137.0 PSF	108.1 PSF	137.0 PSF	108.1 PSF	91.3 PSF	72.1 PSF	91.3 PSF	72.1 PSF	247.00 LB-FT	147.4 LB	502.1 LB	390.9 LB
36 "			117.6 PSF	92.8 PSF	117.6 PSF	92.8 PSF	78.4 PSF	61.9 PSF	78.4 PSF	61.9 PSF	247.00 LB-FT	126.6 LB	472.4 LB	387.4 LB
18 "	36 "	1260 in²	154.4 PSF	121.9 PSF	138.8 PSF	109.5 PSF	102.9 PSF	81.3 PSF	92.6 PSF	73.1 PSF	247.00 LB-FT	225.2 LB	658.4 LB	448.9 LB
24 "			121.7 PSF	96.0 PSF	114.5 PSF	90.4 PSF	81.1 PSF	64.0 PSF	76.4 PSF	60.3 PSF	247.00 LB-FT	177.4 LB	576.3 LB	427.1 LB
30 "			101.1 PSF	79.8 PSF	101.1 PSF	79.8 PSF	67.4 PSF	53.2 PSF	67.4 PSF	53.2 PSF	247.00 LB-FT	147.4 LB	526.7 LB	415.4 LB
36 "			86.8 PSF	68.5 PSF	86.8 PSF	68.5 PSF	57.8 PSF	45.7 PSF	57.8 PSF	45.7 PSF	247.00 LB-FT	126.6 LB	493.5 LB	408.5 LB
18 "	42 "	1680 in²	115.8 PSF	91.4 PSF	103.0 PSF	81.3 PSF	77.2 PSF	60.9 PSF	68.7 PSF	54.3 PSF	247.00 LB-FT	225.2 LB	696.0 LB	486.4 LB
24 "			91.2 PSF	72.0 PSF	85.2 PSF	67.2 PSF	60.8 PSF	48.0 PSF	56.8 PSF	44.8 PSF	247.00 LB-FT	177.4 LB	605.9 LB	456.7 LB
30 "			75.8 PSF	59.8 PSF	75.8 PSF	59.8 PSF	50.5 PSF	39.9 PSF	50.5 PSF	39.9 PSF	247.00 LB-FT	147.4 LB	551.3 LB	440.0 LB
36 "			65.1 PSF	51.4 PSF	65.1 PSF	51.4 PSF	43.4 PSF	34.2 PSF	43.4 PSF	34.2 PSF	247.00 LB-FT	126.6 LB	514.6 LB	429.6 LB
18 "	48 "	2304 in²	84.4 PSF	66.6 PSF	74.4 PSF	58.7 PSF	56.3 PSF	44.4 PSF	49.6 PSF	39.2 PSF	247.00 LB-FT	225.2 LB	733.5 LB	524.0 LB
24 "			66.5 PSF	52.5 PSF	61.6 PSF	48.6 PSF	44.3 PSF	35.0 PSF	41.1 PSF	32.4 PSF	247.00 LB-FT	177.4 LB	635.5 LB	486.3 LB
30 "			55.3 PSF	43.6 PSF	55.3 PSF	43.6 PSF	36.8 PSF	29.1 PSF	36.8 PSF	29.1 PSF	247.00 LB-FT	147.4 LB	575.9 LB	464.6 LB
36 "			47.4 PSF	37.4 PSF	47.4 PSF	37.4 PSF	31.6 PSF	24.9 PSF	31.6 PSF	24.9 PSF	247.00 LB-FT	126.6 LB	535.7 LB	450.7 LB

"XHD" STAND DESIGN SCHEDULE

24" STAND DEPTH: MAX FACE AREA (2760in² - 11520in²), FRAME QUANTITY (5-8 FRAMES)

STAND CLEAR HEIGHT	MAX MEAN UNIT HEIGHT	MAX FACE AREA	UNIT TO FRAME RATIO: MAX FACE AREA : 8 FRAMES, ANCHOR TYPE: 1 OR 4 — MAX ALLOWABLE LATERAL LOAD	MAX ALLOWABLE UPLIFT	ANCHORS TYPE: 2 OR 3 — MAX ALLOWABLE LATERAL LOAD	MAX ALLOWABLE UPLIFT	MAX FACE AREA : 7 FRAMES, ANCHOR TYPE: 1 OR 4 — MAX ALLOWABLE LATERAL LOAD	MAX ALLOWABLE UPLIFT	ANCHORS TYPE: 2 OR 3 — MAX ALLOWABLE LATERAL LOAD	MAX ALLOWABLE UPLIFT	MAX FACE AREA : 6 FRAMES, ANCHOR TYPE: 1 OR 4 — MAX ALLOWABLE LATERAL LOAD	MAX ALLOWABLE UPLIFT	ANCHORS TYPE: 2 OR 3 — MAX ALLOWABLE LATERAL LOAD	MAX ALLOWABLE UPLIFT	MAX FACE AREA : 5 FRAMES, ANCHOR TYPE: 1 OR 4 — MAX ALLOWABLE LATERAL LOAD	MAX ALLOWABLE UPLIFT	ANCHORS TYPE: 2 OR 3 — MAX ALLOWABLE LATERAL LOAD	MAX ALLOWABLE UPLIFT	LOAD TRANSFER INFORMATION FOR USE WITH HOST STRUCTURE VERIFICATION ONLY: MAX. BASE MOMENT (M)	MAX. BASE SHEAR (V)	MAX. BASE UPLIFT (T)	MAX. BASE GRAVITY (C)
18 "	24 "	2760 in²	200.0 PSF	157.8 PSF	200.0 PSF	157.8 PSF	200.0 PSF	157.8 PSF	200.0 PSF	157.8 PSF	200.0 PSF	157.8 PSF	200.0 PSF	157.8 PSF	181.6 PSF	143.4 PSF	167.8 PSF	132.5 PSF	311.90 LB-FT	348.1 LB	1209.7 LB	1032.5 LB
24 "			200.0 PSF	157.8 PSF	200.0 PSF	157.8 PSF	197.5 PSF	155.9 PSF	197.4 PSF	155.9 PSF	169.3 PSF	133.6 PSF	169.3 PSF	133.6 PSF	141.0 PSF	111.3 PSF	141.0 PSF	111.3 PSF	311.90 LB-FT	270.4 LB	1076.3 LB	990.8 LB
30 "			184.9 PSF	145.9 PSF	184.9 PSF	145.9 PSF	161.7 PSF	127.7 PSF	161.7 PSF	127.7 PSF	138.6 PSF	109.4 PSF	138.6 PSF	109.4 PSF	115.5 PSF	91.2 PSF	115.5 PSF	91.2 PSF	311.90 LB-FT	221.4 LB	991.4 LB	965.7 LB
36 "			156.7 PSF	123.7 PSF	156.7 PSF	123.7 PSF	137.1 PSF	108.2 PSF	137.1 PSF	108.2 PSF	117.5 PSF	92.7 PSF	117.5 PSF	92.7 PSF	97.9 PSF	77.3 PSF	97.9 PSF	77.3 PSF	311.90 LB-FT	187.7 LB	931.9 LB	948.8 LB
18 "	30 "	4650 in²	172.5 PSF	136.1 PSF	155.3 PSF	122.6 PSF	150.9 PSF	119.1 PSF	135.9 PSF	107.3 PSF	129.3 PSF	102.1 PSF	116.6 PSF	92.0 PSF	107.8 PSF	85.1 PSF	97.3 PSF	76.8 PSF	311.90 LB-FT	348.1 LB	1305.2 LB	1119.5 LB
24 "			133.9 PSF	105.7 PSF	131.2 PSF	103.5 PSF	117.2 PSF	92.5 PSF	114.8 PSF	90.7 PSF	100.4 PSF	79.3 PSF	98.5 PSF	77.8 PSF	83.7 PSF	66.1 PSF	82.2 PSF	64.9 PSF	311.90 LB-FT	270.4 LB	1145.9 LB	1058.4 LB
30 "			109.7 PSF	86.6 PSF	109.7 PSF	86.6 PSF	96.0 PSF	75.8 PSF	96.0 PSF	75.8 PSF	82.3 PSF	64.9 PSF	82.3 PSF	64.9 PSF	68.5 PSF	54.1 PSF	68.5 PSF	54.1 PSF	311.90 LB-FT	221.4 LB	1046.8 LB	1021.0 LB
36 "			93.0 PSF	73.4 PSF	93.0 PSF	73.4 PSF	81.3 PSF	64.2 PSF	81.3 PSF	64.2 PSF	69.7 PSF	55.0 PSF	69.7 PSF	55.0 PSF	58.1 PSF	45.8 PSF	58.1 PSF	45.8 PSF	311.90 LB-FT	187.7 LB	978.8 LB	995.8 LB
18 "	36 "	6300 in²	127.3 PSF	100.5 PSF	112.0 PSF	88.4 PSF	111.4 PSF	87.9 PSF	98.0 PSF	77.4 PSF	95.4 PSF	75.3 PSF	84.1 PSF	66.4 PSF	79.5 PSF	62.8 PSF	70.1 PSF	55.4 PSF	311.90 LB-FT	348.1 LB	1392.2 LB	1206.5 LB
24 "			98.9 PSF	78.0 PSF	94.9 PSF	74.9 PSF	86.5 PSF	68.3 PSF	83.1 PSF	65.6 PSF	74.1 PSF	58.5 PSF	71.3 PSF	56.3 PSF	61.8 PSF	48.8 PSF	59.5 PSF	46.9 PSF	311.90 LB-FT	270.4 LB	1213.5 LB	1126.0 LB
30 "			81.0 PSF	63.9 PSF	81.0 PSF	63.9 PSF	70.8 PSF	55.9 PSF	70.8 PSF	55.9 PSF	60.7 PSF	47.9 PSF	60.7 PSF	47.9 PSF	50.6 PSF	39.9 PSF	50.6 PSF	39.9 PSF	311.90 LB-FT	221.4 LB	1102.1 LB	1076.4 LB
36 "			68.6 PSF	54.1 PSF	68.6 PSF	54.1 PSF	60.0 PSF	47.4 PSF	60.0 PSF	47.4 PSF	51.4 PSF	40.6 PSF	51.4 PSF	40.6 PSF	42.9 PSF	33.8 PSF	42.9 PSF	33.8 PSF	311.90 LB-FT	187.7 LB	1025.8 LB	1042.7 LB
18 "	42 "	8400 in²	95.4 PSF	75.3 PSF	82.1 PSF	64.8 PSF	83.5 PSF	65.9 PSF	71.8 PSF	56.7 PSF	71.6 PSF	56.5 PSF	61.6 PSF	48.6 PSF	59.6 PSF	47.1 PSF	51.4 PSF	40.6 PSF	311.90 LB-FT	348.1 LB	1479.3 LB	1293.6 LB
24 "			74.1 PSF	58.5 PSF	69.8 PSF	55.1 PSF	64.9 PSF	51.2 PSF	61.1 PSF	48.2 PSF	55.6 PSF	43.9 PSF	52.4 PSF	41.4 PSF	46.3 PSF	36.6 PSF	43.7 PSF	34.5 PSF	311.90 LB-FT	270.4 LB	1281.2 LB	1193.6 LB
30 "			60.7 PSF	47.9 PSF	60.7 PSF	47.9 PSF	53.1 PSF	41.9 PSF	53.1 PSF	41.9 PSF	45.5 PSF	35.9 PSF	45.5 PSF	35.9 PSF	37.9 PSF	29.9 PSF	37.9 PSF	29.9 PSF	311.90 LB-FT	221.4 LB	1157.5 LB	1131.8 LB
36 "			51.4 PSF	40.6 PSF	51.4 PSF	40.6 PSF	45.0 PSF	35.5 PSF	45.0 PSF	35.5 PSF	38.6 PSF	30.4 PSF	38.6 PSF	30.4 PSF	32.1 PSF	25.4 PSF	32.1 PSF	25.4 PSF	311.90 LB-FT	187.7 LB	1072.7 LB	1089.6 LB
18 "	48 "	11520 in²	69.6 PSF	54.9 PSF	58.5 PSF	46.2 PSF	60.9 PSF	48.1 PSF	51.2 PSF	40.4 PSF	52.2 PSF	41.2 PSF	43.9 PSF	34.7 PSF	43.5 PSF	34.3 PSF	36.6 PSF	28.9 PSF	311.90 LB-FT	348.1 LB	1566.3 LB	1380.6 LB
24 "			54.0 PSF	42.7 PSF	49.9 PSF	39.4 PSF	47.3 PSF	37.3 PSF	43.7 PSF	34.5 PSF	40.5 PSF	32.0 PSF	37.5 PSF	29.6 PSF	33.8 PSF	26.6 PSF	31.3 PSF	24.7 PSF	311.90 LB-FT	270.4 LB	1348.8 LB	1261.2 LB
30 "			44.2 PSF	34.9 PSF	43.6 PSF	34.4 PSF	38.7 PSF	30.6 PSF	38.2 PSF	30.1 PSF	33.2 PSF	26.2 PSF	32.7 PSF	25.8 PSF	27.6 PSF	21.8 PSF	27.3 PSF	21.5 PSF	311.90 LB-FT	221.4 LB	1212.9 LB	1187.1 LB
36 "			37.5 PSF	29.6 PSF	37.5 PSF	29.6 PSF	32.8 PSF	25.9 PSF	32.8 PSF	25.9 PSF	28.1 PSF	22.2 PSF	28.1 PSF	22.2 PSF	23.4 PSF	18.5 PSF	23.4 PSF	18.5 PSF	311.90 LB-FT	187.7 LB	1119.6 LB	1136.6 LB

36" STAND DEPTH: MAX FACE AREA (2760in² - 11520in²), FRAME QUANTITY (5-8 FRAMES)

STAND CLEAR HEIGHT	MAX MEAN UNIT HEIGHT	MAX FACE AREA	UNIT TO FRAME RATIO: MAX FACE AREA : 8 FRAMES, ANCHOR TYPE: 1 OR 4 — MAX ALLOWABLE LATERAL LOAD	MAX ALLOWABLE UPLIFT	ANCHORS TYPE: 2 OR 3 — MAX ALLOWABLE LATERAL LOAD	MAX ALLOWABLE UPLIFT	MAX FACE AREA : 7 FRAMES, ANCHOR TYPE: 1 OR 4 — MAX ALLOWABLE LATERAL LOAD	MAX ALLOWABLE UPLIFT	ANCHORS TYPE: 2 OR 3 — MAX ALLOWABLE LATERAL LOAD	MAX ALLOWABLE UPLIFT	MAX FACE AREA : 6 FRAMES, ANCHOR TYPE: 1 OR 4 — MAX ALLOWABLE LATERAL LOAD	MAX ALLOWABLE UPLIFT	ANCHORS TYPE: 2 OR 3 — MAX ALLOWABLE LATERAL LOAD	MAX ALLOWABLE UPLIFT	MAX FACE AREA : 5 FRAMES, ANCHOR TYPE: 1 OR 4 — MAX ALLOWABLE LATERAL LOAD	MAX ALLOWABLE UPLIFT	ANCHORS TYPE: 2 OR 3 — MAX ALLOWABLE LATERAL LOAD	MAX ALLOWABLE UPLIFT	LOAD TRANSFER INFORMATION FOR USE WITH HOST STRUCTURE VERIFICATION ONLY: MAX. BASE MOMENT (M)	MAX. BASE SHEAR (V)	MAX. BASE UPLIFT (T)	MAX. BASE GRAVITY (C)
18 "	24 "	2760 in²	200.0 PSF	157.8 PSF	200.0 PSF	157.8 PSF	200.0 PSF	157.8 PSF	200.0 PSF	157.8 PSF	200.0 PSF	157.8 PSF	200.0 PSF	157.8 PSF	171.3 PSF	135.3 PSF	171.3 PSF	135.3 PSF	311.90 LB-FT	328.5 LB	839.1 LB	686.6 LB
24 "			200.0 PSF	157.8 PSF	200.0 PSF	157.8 PSF	187.7 PSF	148.2 PSF	187.7 PSF	148.2 PSF	160.9 PSF	127.0 PSF	160.9 PSF	127.0 PSF	134.0 PSF	105.8 PSF	134.0 PSF	105.8 PSF	311.90 LB-FT	256.9 LB	743.6 LB	675.0 LB
30 "			176.7 PSF	139.5 PSF	176.7 PSF	139.5 PSF	154.6 PSF	122.0 PSF	154.6 PSF	122.0 PSF	132.5 PSF	104.6 PSF	132.5 PSF	104.6 PSF	110.4 PSF	87.2 PSF	110.4 PSF	87.2 PSF	311.90 LB-FT	211.7 LB	682.4 LB	669.0 LB
36 "			150.5 PSF	118.8 PSF	150.5 PSF	118.8 PSF	131.6 PSF	103.9 PSF	131.6 PSF	103.9 PSF	112.8 PSF	89.1 PSF	112.8 PSF	89.1 PSF	94.0 PSF	74.2 PSF	94.0 PSF	74.2 PSF	311.90 LB-FT	180.2 LB	639.1 LB	665.4 LB
18 "	30 "	4650 in²	162.7 PSF	128.5 PSF	162.7 PSF	128.5 PSF	142.4 PSF	112.4 PSF	142.4 PSF	112.4 PSF	122.0 PSF	96.3 PSF	122.0 PSF	96.3 PSF	101.7 PSF	80.3 PSF	101.7 PSF	80.3 PSF	311.90 LB-FT	328.5 LB	902.3 LB	741.4 LB
24 "			127.3 PSF	100.5 PSF	127.3 PSF	100.5 PSF	111.4 PSF	87.9 PSF	111.4 PSF	87.9 PSF	95.5 PSF	75.3 PSF	95.5 PSF	75.3 PSF	79.5 PSF	62.8 PSF	79.5 PSF	62.8 PSF	311.90 LB-FT	256.9 LB	788.4 LB	717.9 LB
30 "			104.9 PSF	82.8 PSF	104.9 PSF	82.8 PSF	91.7 PSF	72.4 PSF	91.7 PSF	72.4 PSF	78.6 PSF	62.1 PSF	78.6 PSF	62.1 PSF	65.5 PSF	51.7 PSF	65.5 PSF	51.7 PSF	311.90 LB-FT	211.7 LB	717.6 LB	704.3 LB
36 "			89.3 PSF	70.5 PSF	89.3 PSF	70.5 PSF	78.1 PSF	61.7 PSF	78.1 PSF	61.7 PSF	66.9 PSF	52.8 PSF	66.9 PSF	52.8 PSF	55.8 PSF	44.0 PSF	55.8 PSF	44.0 PSF	311.90 LB-FT	180.2 LB	669.1 LB	695.4 LB
18 "	36 "	6300 in²	120.1 PSF	94.8 PSF	120.1 PSF	94.8 PSF	105.1 PSF	82.9 PSF	105.1 PSF	82.9 PSF	90.1 PSF	71.1 PSF	90.1 PSF	71.1 PSF	75.0 PSF	59.2 PSF	75.0 PSF	59.2 PSF	311.90 LB-FT	328.5 LB	957.0 LB	796.1 LB
24 "			93.9 PSF	74.2 PSF	93.9 PSF	74.2 PSF	82.2 PSF	64.9 PSF	82.2 PSF	64.9 PSF	70.4 PSF	55.6 PSF	70.4 PSF	55.6 PSF	58.7 PSF	46.3 PSF	58.7 PSF	46.3 PSF	311.90 LB-FT	256.9 LB	831.3 LB	760.7 LB
30 "			77.4 PSF	61.1 PSF	77.4 PSF	61.1 PSF	67.7 PSF	53.4 PSF	67.7 PSF	53.4 PSF	58.0 PSF	45.8 PSF	58.0 PSF	45.8 PSF	48.3 PSF	38.2 PSF	48.3 PSF	38.2 PSF	311.90 LB-FT	211.7 LB	752.9 LB	739.5 LB
36 "			65.9 PSF	52.0 PSF	65.9 PSF	52.0 PSF	57.6 PSF	45.5 PSF	57.6 PSF	45.5 PSF	49.4 PSF	39.0 PSF	49.4 PSF	39.0 PSF	41.2 PSF	32.5 PSF	41.2 PSF	32.5 PSF	311.90 LB-FT	180.2 LB	699.2 LB	725.5 LB
18 "	42 "	8400 in²	90.1 PSF	71.1 PSF	89.0 PSF	70.2 PSF	78.8 PSF	62.2 PSF	77.9 PSF	61.5 PSF	67.5 PSF	53.3 PSF	66.8 PSF	52.7 PSF	56.3 PSF	44.4 PSF	55.7 PSF	44.0 PSF	311.90 LB-FT	328.5 LB	1011.8 LB	850.9 LB
24 "			70.4 PSF	55.6 PSF	70.4 PSF	55.6 PSF	61.6 PSF	48.6 PSF	61.6 PSF	48.6 PSF	52.8 PSF	41.7 PSF	52.8 PSF	41.7 PSF	44.0 PSF	34.7 PSF	44.0 PSF	34.7 PSF	311.90 LB-FT	256.9 LB	874.1 LB	803.5 LB
30 "			58.0 PSF	45.8 PSF	58.0 PSF	45.8 PSF	50.8 PSF	40.1 PSF	50.8 PSF	40.1 PSF	43.5 PSF	34.3 PSF	43.5 PSF	34.3 PSF	36.2 PSF	28.6 PSF	36.2 PSF	28.6 PSF	311.90 LB-FT	211.7 LB	788.2 LB	774.8 LB
36 "			49.4 PSF	39.0 PSF	49.4 PSF	39.0 PSF	43.2 PSF	34.1 PSF	43.2 PSF	34.1 PSF	37.0 PSF	29.2 PSF	37.0 PSF	29.2 PSF	30.9 PSF	24.4 PSF	30.9 PSF	24.4 PSF	311.90 LB-FT	180.2 LB	729.2 LB	755.5 LB
18 "	48 "	11520 in²	65.7 PSF	51.8 PSF	63.8 PSF	50.4 PSF	57.4 PSF	45.3 PSF	55.9 PSF	44.1 PSF	49.2 PSF	38.9 PSF	47.9 PSF	37.8 PSF	41.0 PSF	32.4 PSF	40.0 PSF	31.5 PSF	311.90 LB-FT	328.5 LB	1066.5 LB	905.6 LB
24 "			51.3 PSF	40.5 PSF	51.3 PSF	40.5 PSF	44.9 PSF	35.5 PSF	44.9 PSF	35.5 PSF	38.5 PSF	30.4 PSF	38.5 PSF	30.4 PSF	32.1 PSF	25.3 PSF	32.1 PSF	25.3 PSF	311.90 LB-FT	256.9 LB	916.9 LB	846.4 LB
30 "			42.3 PSF	33.4 PSF	42.3 PSF	33.4 PSF	37.0 PSF	29.2 PSF	37.0 PSF	29.2 PSF	31.7 PSF	25.0 PSF	31.7 PSF	25.0 PSF	26.4 PSF	20.8 PSF	26.4 PSF	20.8 PSF	311.90 LB-FT	211.7 LB	823.5 LB	810.1 LB
36 "			36.0 PSF	28.4 PSF	36.0 PSF	28.4 PSF	31.5 PSF	24.9 PSF	31.5 PSF	24.9 PSF	27.0 PSF	21.3 PSF	27.0 PSF	21.3 PSF	22.5 PSF	17.7 PSF	22.5 PSF	17.7 PSF	311.90 LB-FT	180.2 LB	759.3 LB	785.6 LB

FRANK BENNARDO, P.E.
PE# 0046549 CA# 9885

FRANK L. BENNARDO LICENSE No PE0046549 STATE OF FLORIDA PROFESSIONAL ENGINEER

12/28/2023

DECEMBER 21, 2023

FL

FL 16921.1

ENGINEERING EXPRESS®
POSTAL ADDRESS:
2234 NORTH FEDERAL HWY #7664
BOCA RATON, FL 33431
ENGINEERINGEXPRESS.COM

PRECISION ALUMINUM PRODUCTS, INC.
1339 SW 1ST WAY
DEERFIELD BEACH, FL 33441
(954) 480-6919

ALUMINUM A/C STANDS
FLORIDA BUILDING CODE EIGHTH EDITION (2023)
FLORIDA STATEWIDE APPROVAL (FSA FL# 16921.1)

REMARKS	DRWN	CHKD	DATE
PREV. SUBMITTAL (20-32768)	CSL	RWN	12/15/20
2023 FBC UPDATE & TECH. CHANGES	MRT	RWN	12/08/23
-	-	-	-
-	-	-	-
-	-	-	-

COPYRIGHT ENGINEERING EXPRESS®

23-69401

SCALE: NTS UNLESS NOTED

11 OF 18

12/21/2023 1:55 PM MILTON c:\users\milton\engineering express\production - documents\projects\23-\23-69401 2023 product fbc update fl16921\work\2023 fbc\drawings & cad\23-69401c - fl16921.1 - cad.dwg

"XHD" STAND DESIGN SCHEDULE CONTINUED

DESIGN SCHEDULES NOTES:

1. DESIGN SCHEDULES SHOWN HEREIN ARE REFERENCED TO ALLOWABLE STRENGTH DESIGN (ASD) METHODOLOGY.
2. EMPTY CELLS DENOTES CONDITIONS NOT ALLOWED TO USE.
3. MAXIMUM CALCULATED FACE AREA SHALL BE EQUAL TO OR LESS THAN THE MAXIMUM ALLOWABLE FACE AREA FOR EACH CONFIGURATION.
4. REFERENCE ANCHOR SCHEDULE FOR ANCHOR TYPES LISTED HEREIN.

FRANK BENNARDO, P.E.
PE# 0046549 CA# 9885

FRANK L. BENNARDO LICENSE No PE0046549 STATE OF FLORIDA PROFESSIONAL ENGINEER

12/28/2023

DECEMBER 21, 2023

FL

24" STAND DEPTH: MAX FACE AREA (2208in² - 9216in²), FRAME QUANTITY (4-7 FRAMES)

STAND CLEAR HEIGHT	MAX MEAN UNIT HEIGHT	MAX FACE AREA	UNIT TO FRAME RATIO																LOAD TRANSFER INFORMATION FOR USE WITH HOST STRUCTURE VERIFICATION ONLY			
			MAX FACE AREA : 7 FRAMES				MAX FACE AREA : 6 FRAMES				MAX FACE AREA : 5 FRAMES				MAX FACE AREA : 4 FRAMES							
			ANCHOR TYPE: 1 OR 4		ANCHORS TYPE: 2 OR 3		ANCHOR TYPE: 1 OR 4		ANCHORS TYPE: 2 OR 3		ANCHOR TYPE: 1 OR 4		ANCHORS TYPE: 2 OR 3		ANCHOR TYPE: 1 OR 4		ANCHORS TYPE: 2 OR 3					
			MAX ALLOWABLE LATERAL LOAD	MAX ALLOWABLE UPLIFT	MAX ALLOWABLE LATERAL LOAD	MAX ALLOWABLE UPLIFT	MAX ALLOWABLE LATERAL LOAD	MAX ALLOWABLE UPLIFT	MAX ALLOWABLE LATERAL LOAD	MAX ALLOWABLE UPLIFT	MAX ALLOWABLE LATERAL LOAD	MAX ALLOWABLE UPLIFT	MAX ALLOWABLE LATERAL LOAD	MAX ALLOWABLE UPLIFT	MAX ALLOWABLE LATERAL LOAD	MAX ALLOWABLE UPLIFT	MAX ALLOWABLE LATERAL LOAD	MAX ALLOWABLE UPLIFT	MAX. BASE MOMENT (M)	MAX. BASE SHEAR (V)	MAX. BASE UPLIFT (T)	MAX. BASE GRAVITY (C)
18 "	24 "	2208 in²	200.0 PSF	157.8 PSF	200.0 PSF	157.8 PSF	200.0 PSF	157.8 PSF	200.0 PSF	157.8 PSF	200.0 PSF	157.8 PSF	200.0 PSF	157.8 PSF	181.6 PSF	143.4 PSF	167.8 PSF	132.5 PSF	311.90 LB-FT	348.1 LB	1209.7 LB	1032.5 LB
24 "			200.0 PSF	157.8 PSF	200.0 PSF	157.8 PSF	200.0 PSF	157.8 PSF	200.0 PSF	157.8 PSF	176.3 PSF	139.2 PSF	176.3 PSF	139.2 PSF	141.0 PSF	111.3 PSF	141.0 PSF	111.3 PSF	311.90 LB-FT	270.4 LB	1074.4 LB	990.8 LB
30 "			200.0 PSF	157.8 PSF	200.0 PSF	157.8 PSF	173.3 PSF	136.8 PSF	173.3 PSF	136.8 PSF	144.4 PSF	114.0 PSF	144.4 PSF	114.0 PSF	115.5 PSF	91.2 PSF	115.5 PSF	91.2 PSF	311.90 LB-FT	221.4 LB	990.4 LB	965.7 LB
36 "			171.3 PSF	135.3 PSF	171.3 PSF	135.3 PSF	146.9 PSF	115.9 PSF	146.9 PSF	115.9 PSF	122.4 PSF	96.6 PSF	122.4 PSF	96.6 PSF	97.9 PSF	77.3 PSF	97.9 PSF	77.3 PSF	311.90 LB-FT	187.7 LB	933.1 LB	948.8 LB
18 "	30 "	3720 in²	188.6 PSF	148.9 PSF	169.8 PSF	134.0 PSF	161.7 PSF	127.6 PSF	145.6 PSF	114.9 PSF	134.7 PSF	106.3 PSF	121.4 PSF	95.9 PSF	107.8 PSF	85.1 PSF	97.3 PSF	76.8 PSF	311.90 LB-FT	348.1 LB	1306.4 LB	1119.5 LB
24 "			146.5 PSF	115.7 PSF	143.4 PSF	113.2 PSF	125.6 PSF	99.1 PSF	123.0 PSF	97.1 PSF	104.6 PSF	82.6 PSF	102.6 PSF	81.0 PSF	83.7 PSF	66.1 PSF	82.2 PSF	64.9 PSF	311.90 LB-FT	270.4 LB	1147.1 LB	1058.4 LB
30 "			120.0 PSF	94.7 PSF	120.0 PSF	94.7 PSF	102.8 PSF	81.2 PSF	102.8 PSF	81.2 PSF	85.7 PSF	67.6 PSF	85.7 PSF	67.6 PSF	68.5 PSF	54.1 PSF	68.5 PSF	54.1 PSF	311.90 LB-FT	221.4 LB	1048.0 LB	1021.0 LB
36 "			101.7 PSF	80.3 PSF	101.7 PSF	80.3 PSF	87.1 PSF	68.8 PSF	87.1 PSF	68.8 PSF	72.6 PSF	57.3 PSF	72.6 PSF	57.3 PSF	58.1 PSF	45.8 PSF	58.1 PSF	45.8 PSF	311.90 LB-FT	187.7 LB	980.0 LB	995.8 LB
18 "	36 "	5040 in²	139.2 PSF	109.9 PSF	122.4 PSF	96.6 PSF	119.3 PSF	94.2 PSF	105.0 PSF	82.9 PSF	99.4 PSF	78.5 PSF	87.6 PSF	69.1 PSF	79.5 PSF	62.8 PSF	70.1 PSF	55.4 PSF	311.90 LB-FT	348.1 LB	1393.4 LB	1206.5 LB
24 "			108.1 PSF	85.4 PSF	103.8 PSF	81.9 PSF	92.7 PSF	73.2 PSF	89.0 PSF	70.3 PSF	77.2 PSF	61.0 PSF	74.2 PSF	58.6 PSF	61.8 PSF	48.8 PSF	59.5 PSF	46.9 PSF	311.90 LB-FT	270.4 LB	1214.7 LB	1126.0 LB
30 "			88.5 PSF	69.9 PSF	88.5 PSF	69.9 PSF	75.9 PSF	59.9 PSF	75.9 PSF	59.9 PSF	63.2 PSF	49.9 PSF	63.2 PSF	49.9 PSF	50.6 PSF	39.9 PSF	50.6 PSF	39.9 PSF	311.90 LB-FT	221.4 LB	1103.3 LB	1076.4 LB
36 "			75.0 PSF	59.2 PSF	75.0 PSF	59.2 PSF	64.3 PSF	50.8 PSF	64.3 PSF	50.8 PSF	53.6 PSF	42.3 PSF	53.6 PSF	42.3 PSF	42.9 PSF	33.8 PSF	42.9 PSF	33.8 PSF	311.90 LB-FT	187.7 LB	1027.0 LB	1042.7 LB
18 "	42 "	6720 in²	104.4 PSF	82.4 PSF	89.7 PSF	70.8 PSF	89.5 PSF	70.6 PSF	77.0 PSF	60.7 PSF	74.6 PSF	58.8 PSF	64.2 PSF	50.7 PSF	59.6 PSF	47.1 PSF	51.4 PSF	40.6 PSF	311.90 LB-FT	348.1 LB	1480.5 LB	1293.6 LB
24 "			81.1 PSF	64.0 PSF	76.3 PSF	60.3 PSF	69.5 PSF	54.9 PSF	65.5 PSF	51.7 PSF	57.9 PSF	45.7 PSF	54.6 PSF	43.1 PSF	46.3 PSF	36.6 PSF	43.7 PSF	34.5 PSF	311.90 LB-FT	270.4 LB	1282.4 LB	1193.6 LB
30 "			66.4 PSF	52.4 PSF	66.4 PSF	52.4 PSF	56.9 PSF	44.9 PSF	56.9 PSF	44.9 PSF	47.4 PSF	37.4 PSF	47.4 PSF	37.4 PSF	37.9 PSF	29.9 PSF	37.9 PSF	29.9 PSF	311.90 LB-FT	221.4 LB	1158.7 LB	1131.8 LB
36 "			56.3 PSF	44.4 PSF	56.3 PSF	44.4 PSF	48.2 PSF	38.1 PSF	48.2 PSF	38.1 PSF	40.2 PSF	31.7 PSF	40.2 PSF	31.7 PSF	32.1 PSF	25.4 PSF	32.1 PSF	25.4 PSF	311.90 LB-FT	187.7 LB	1073.9 LB	1089.6 LB
18 "	48 "	9216 in²	76.1 PSF	60.1 PSF	64.0 PSF	50.5 PSF	65.2 PSF	51.5 PSF	54.9 PSF	43.3 PSF	54.3 PSF	42.9 PSF	45.8 PSF	36.1 PSF	43.5 PSF	34.3 PSF	36.6 PSF	28.9 PSF	311.90 LB-FT	348.1 LB	1567.5 LB	1380.6 LB
24 "			59.1 PSF	46.7 PSF	54.6 PSF	43.1 PSF	50.7 PSF	40.0 PSF	46.8 PSF	37.0 PSF	42.2 PSF	33.3 PSF	39.1 PSF	30.8 PSF	33.8 PSF	26.6 PSF	31.3 PSF	24.7 PSF	311.90 LB-FT	270.4 LB	1350.0 LB	1261.2 LB
30 "			48.4 PSF	38.2 PSF	47.7 PSF	37.6 PSF	41.5 PSF	32.7 PSF	40.9 PSF	32.3 PSF	34.6 PSF	27.3 PSF	34.1 PSF	26.9 PSF	27.6 PSF	21.8 PSF	27.3 PSF	21.5 PSF	311.90 LB-FT	221.4 LB	1214.1 LB	1187.1 LB
36 "			41.0 PSF	32.4 PSF	41.0 PSF	32.4 PSF	35.1 PSF	27.7 PSF	35.1 PSF	27.7 PSF	29.3 PSF	23.1 PSF	29.3 PSF	23.1 PSF	23.4 PSF	18.5 PSF	23.4 PSF	18.5 PSF	311.90 LB-FT	187.7 LB	1120.8 LB	1136.6 LB

36" STAND DEPTH: MAX FACE AREA (2208in² - 9216in²), FRAME QUANTITY (4-7 FRAMES)

STAND CLEAR HEIGHT	MAX MEAN UNIT HEIGHT	MAX FACE AREA	UNIT TO FRAME RATIO																LOAD TRANSFER INFORMATION FOR USE WITH HOST STRUCTURE VERIFICATION ONLY			
			MAX FACE AREA : 7 FRAMES				MAX FACE AREA : 6 FRAMES				MAX FACE AREA : 5 FRAMES				MAX FACE AREA : 4 FRAMES							
			ANCHOR TYPE: 1 OR 4		ANCHORS TYPE: 2 OR 3		ANCHOR TYPE: 1 OR 4		ANCHORS TYPE: 2 OR 3		ANCHOR TYPE: 1 OR 4		ANCHORS TYPE: 2 OR 3		ANCHOR TYPE: 1 OR 4		ANCHORS TYPE: 2 OR 3					
			MAX ALLOWABLE LATERAL LOAD	MAX ALLOWABLE UPLIFT	MAX ALLOWABLE LATERAL LOAD	MAX ALLOWABLE UPLIFT	MAX ALLOWABLE LATERAL LOAD	MAX ALLOWABLE UPLIFT	MAX ALLOWABLE LATERAL LOAD	MAX ALLOWABLE UPLIFT	MAX ALLOWABLE LATERAL LOAD	MAX ALLOWABLE UPLIFT	MAX ALLOWABLE LATERAL LOAD	MAX ALLOWABLE UPLIFT	MAX ALLOWABLE LATERAL LOAD	MAX ALLOWABLE UPLIFT	MAX ALLOWABLE LATERAL LOAD	MAX ALLOWABLE UPLIFT	MAX. BASE MOMENT (M)	MAX. BASE SHEAR (V)	MAX. BASE UPLIFT (T)	MAX. BASE GRAVITY (C)
18 "	24 "	2208 in²	200.0 PSF	157.8 PSF	200.0 PSF	157.8 PSF	200.0 PSF	157.8 PSF	200.0 PSF	157.8 PSF	200.0 PSF	157.8 PSF	200.0 PSF	157.8 PSF	171.3 PSF	135.3 PSF	171.3 PSF	135.3 PSF	311.90 LB-FT	328.5 LB	839.1 LB	686.6 LB
24 "			200.0 PSF	157.8 PSF	200.0 PSF	157.8 PSF	200.0 PSF	157.8 PSF	200.0 PSF	157.8 PSF	167.6 PSF	132.3 PSF	167.6 PSF	132.3 PSF	134.0 PSF	105.8 PSF	134.0 PSF	105.8 PSF	311.90 LB-FT	256.9 LB	741.7 LB	675.0 LB
30 "			193.3 PSF	152.6 PSF	193.3 PSF	152.6 PSF	165.6 PSF	130.8 PSF	165.6 PSF	130.8 PSF	138.0 PSF	109.0 PSF	138.0 PSF	109.0 PSF	110.4 PSF	87.2 PSF	110.4 PSF	87.2 PSF	311.90 LB-FT	211.7 LB	683.6 LB	669.0 LB
36 "			164.6 PSF	129.9 PSF	164.6 PSF	129.9 PSF	141.0 PSF	111.3 PSF	141.0 PSF	111.3 PSF	117.5 PSF	92.8 PSF	117.5 PSF	92.8 PSF	94.0 PSF	74.2 PSF	94.0 PSF	74.2 PSF	311.90 LB-FT	180.2 LB	640.3 LB	665.4 LB
18 "	30 "	3720 in²	178.0 PSF	140.5 PSF	178.0 PSF	140.5 PSF	152.5 PSF	120.4 PSF	152.5 PSF	120.4 PSF	127.1 PSF	100.3 PSF	127.1 PSF	100.3 PSF	101.7 PSF	80.3 PSF	101.7 PSF	80.3 PSF	311.90 LB-FT	328.5 LB	903.5 LB	741.4 LB
24 "			139.2 PSF	109.9 PSF	139.2 PSF	109.9 PSF	119.3 PSF	94.2 PSF	119.3 PSF	94.2 PSF	99.4 PSF	78.5 PSF	99.4 PSF	78.5 PSF	79.5 PSF	62.8 PSF	79.5 PSF	62.8 PSF	311.90 LB-FT	256.9 LB	789.7 LB	717.9 LB
30 "			114.7 PSF	90.5 PSF	114.7 PSF	90.5 PSF	98.3 PSF	77.6 PSF	98.3 PSF	77.6 PSF	81.9 PSF	64.7 PSF	81.9 PSF	64.7 PSF	65.5 PSF	51.7 PSF	65.5 PSF	51.7 PSF	311.90 LB-FT	211.7 LB	718.8 LB	704.3 LB
36 "			97.7 PSF	77.1 PSF	97.7 PSF	77.1 PSF	83.7 PSF	66.1 PSF	83.7 PSF	66.1 PSF	69.7 PSF	55.0 PSF	69.7 PSF	55.0 PSF	55.8 PSF	44.0 PSF	55.8 PSF	44.0 PSF	311.90 LB-FT	180.2 LB	670.3 LB	695.4 LB
18 "	36 "	5040 in²	131.4 PSF	103.7 PSF	131.4 PSF	103.7 PSF	112.6 PSF	88.9 PSF	112.6 PSF	88.9 PSF	93.8 PSF	74.1 PSF	93.8 PSF	74.1 PSF	75.0 PSF	59.2 PSF	75.0 PSF	59.2 PSF	311.90 LB-FT	328.5 LB	958.2 LB	796.1 LB
24 "			102.7 PSF	81.1 PSF	102.7 PSF	81.1 PSF	88.1 PSF	69.5 PSF	88.1 PSF	69.5 PSF	73.4 PSF	57.9 PSF	73.4 PSF	57.9 PSF	58.7 PSF	46.3 PSF	58.7 PSF	46.3 PSF	311.90 LB-FT	256.9 LB	832.5 LB	760.7 LB
30 "			84.6 PSF	66.8 PSF	84.6 PSF	66.8 PSF	72.5 PSF	57.3 PSF	72.5 PSF	57.3 PSF	60.4 PSF	47.7 PSF	60.4 PSF	47.7 PSF	48.3 PSF	38.2 PSF	48.3 PSF	38.2 PSF	311.90 LB-FT	211.7 LB	754.1 LB	739.5 LB
36 "			72.1 PSF	56.9 PSF	72.1 PSF	56.9 PSF	61.8 PSF	48.8 PSF	61.8 PSF	48.8 PSF	51.5 PSF	40.6 PSF	51.5 PSF	40.6 PSF	41.2 PSF	32.5 PSF	41.2 PSF	32.5 PSF	311.90 LB-FT	180.2 LB	700.4 LB	725.5 LB
18 "	42 "	6720 in²	98.5 PSF	77.8 PSF	97.3 PSF	76.8 PSF	84.4 PSF	66.6 PSF	83.4 PSF	65.9 PSF	70.3 PSF	55.5 PSF	69.6 PSF	54.9 PSF	56.3 PSF	44.4 PSF	55.7 PSF	44.0 PSF	311.90 LB-FT	328.5 LB	1013.0 LB	850.9 LB
24 "			77.0 PSF	60.8 PSF	77.0 PSF	60.8 PSF	66.0 PSF	52.1 PSF	66.0 PSF	52.1 PSF	55.0 PSF	43.4 PSF	55.0 PSF	43.4 PSF	44.0 PSF	34.7 PSF	44.0 PSF	34.7 PSF	311.90 LB-FT	256.9 LB	875.3 LB	803.5 LB
30 "			63.5 PSF	50.1 PSF	63.5 PSF	50.1 PSF	54.4 PSF	42.9 PSF	54.4 PSF	42.9 PSF	45.3 PSF	35.8 PSF	45.3 PSF	35.8 PSF	36.2 PSF	28.6 PSF	36.2 PSF	28.6 PSF	311.90 LB-FT	211.7 LB	789.4 LB	774.8 LB
36 "			54.0 PSF	42.7 PSF	54.0 PSF	42.7 PSF	46.3 PSF	36.6 PSF	46.3 PSF	36.6 PSF	38.6 PSF	30.5 PSF	38.6 PSF	30.5 PSF	30.9 PSF	24.4 PSF	30.9 PSF	24.4 PSF	311.90 LB-FT	180.2 LB	730.4 LB	755.5 LB
18 "	48 "	9216 in²	71.8 PSF	56.7 PSF	69.8 PSF	55.1 PSF	61.5 PSF	48.6 PSF	59.8 PSF	47.2 PSF	51.3 PSF	40.5 PSF	49.9 PSF	39.4 PSF	41.0 PSF	32.4 PSF	40.0 PSF	31.5 PSF	311.90 LB-FT	328.5 LB	1067.7 LB	905.6 LB
24 "			56.2 PSF	44.3 PSF	56.2 PSF	44.3 PSF	48.1 PSF	38.0 PSF	48.1 PSF	38.0 PSF	40.1 PSF	31.7 PSF	40.1 PSF	31.7 PSF	32.1 PSF	25.3 PSF	32.1 PSF	25.3 PSF	311.90 LB-FT	256.9 LB	918.2 LB	846.4 LB
30 "			46.3 PSF	36.5 PSF	46.3 PSF	36.5 PSF	39.6 PSF	31.3 PSF	39.6 PSF	31.3 PSF	33.0 PSF	26.1 PSF	33.0 PSF	26.1 PSF	26.4 PSF	20.8 PSF	26.4 PSF	20.8 PSF	311.90 LB-FT	211.7 LB	824.7 LB	810.1 LB
36 "			39.4 PSF	31.1 PSF	39.4 PSF	31.1 PSF	33.8 PSF	26.6 PSF	33.8 PSF	26.6 PSF	28.1 PSF	22.2 PSF	28.1 PSF	22.2 PSF	22.5 PSF	17.7 PSF	22.5 PSF	17.7 PSF	311.90 LB-FT	180.2 LB	760.5 LB	785.6 LB

24" STAND DEPTH: MAX FACE AREA (1656in² - 6912in²), FRAME QUANTITY (3-6 FRAMES)

STAND CLEAR HEIGHT	MAX MEAN UNIT HEIGHT	MAX FACE AREA	UNIT TO FRAME RATIO																LOAD TRANSFER INFORMATION FOR USE WITH HOST STRUCTURE VERIFICATION ONLY			
			MAX FACE AREA : 6 FRAMES				MAX FACE AREA : 5 FRAMES				MAX FACE AREA : 4 FRAMES				MAX FACE AREA : 3 FRAMES							
			ANCHOR TYPE: 1 OR 4		ANCHORS TYPE: 2 OR 3		ANCHOR TYPE: 1 OR 4		ANCHORS TYPE: 2 OR 3		ANCHOR TYPE: 1 OR 4		ANCHORS TYPE: 2 OR 3		ANCHOR TYPE: 1 OR 4		ANCHORS TYPE: 2 OR 3					
			MAX ALLOWABLE LATERAL LOAD	MAX ALLOWABLE UPLIFT	MAX ALLOWABLE LATERAL LOAD	MAX ALLOWABLE UPLIFT	MAX ALLOWABLE LATERAL LOAD	MAX ALLOWABLE UPLIFT	MAX ALLOWABLE LATERAL LOAD	MAX ALLOWABLE UPLIFT	MAX ALLOWABLE LATERAL LOAD	MAX ALLOWABLE UPLIFT	MAX ALLOWABLE LATERAL LOAD	MAX ALLOWABLE UPLIFT	MAX ALLOWABLE LATERAL LOAD	MAX ALLOWABLE UPLIFT	MAX ALLOWABLE LATERAL LOAD	MAX ALLOWABLE UPLIFT	MAX. BASE MOMENT (M)	MAX. BASE SHEAR (V)	MAX. BASE UPLIFT (T)	MAX. BASE GRAVITY (C)
18 "	24 "	1656 in²	200.0 PSF	157.8 PSF	200.0 PSF	157.8 PSF	200.0 PSF	157.8 PSF	200.0 PSF	157.8 PSF	200.0 PSF	157.8 PSF	200.0 PSF	157.8 PSF	181.6 PSF	143.4 PSF	167.8 PSF	132.5 PSF	311.90 LB-FT	348.1 LB	1209.7 LB	1032.5 LB
24 "			200.0 PSF	157.8 PSF	200.0 PSF	157.8 PSF	200.0 PSF	157.8 PSF	200.0 PSF	157.8 PSF	188.1 PSF	148.5 PSF	188.1 PSF	148.5 PSF	141.0 PSF	111.3 PSF	141.0 PSF	111.3 PSF	311.90 LB-FT	270.4 LB	1075.5 LB	990.8 LB
30 "			200.0 PSF	157.8 PSF	200.0 PSF	157.8 PSF	192.6 PSF	152.0 PSF	192.6 PSF	152.0 PSF	154.0 PSF	121.6 PSF	154.0 PSF	121.6 PSF	115.5 PSF	91.2 PSF	115.5 PSF	91.2 PSF	311.90 LB-FT	221.4 LB	991.9 LB	965.7 LB
36 "			195.8 PSF	154.6 PSF	195.8 PSF	154.6 PSF	163.2 PSF	128.8 PSF	163.2 PSF	128.8 PSF	130.5 PSF	103.0 PSF	130.5 PSF	103.0 PSF	97.9 PSF	77.3 PSF	97.9 PSF	77.3 PSF	311.90 LB-FT	187.7 LB	934.7 LB	948.8 LB
18 "	30 "	2790 in²	200.0 PSF	157.8 PSF	193.9 PSF	153.1 PSF	179.6 PSF	141.8 PSF	161.7 PSF	127.6 PSF	143.7 PSF	113.4 PSF	129.5 PSF	102.2 PSF	107.8 PSF	85.1 PSF	97.3 PSF	76.8 PSF	311.90 LB-FT	348.1 LB	1305.8 LB	1119.5 LB
24 "			167.4 PSF	132.2 PSF	163.8 PSF	129.3 PSF	139.5 PSF	110.1 PSF	136.6 PSF	107.8 PSF	111.6 PSF	88.1 PSF	109.4 PSF	86.4 PSF	83.7 PSF	66.1 PSF	82.2 PSF	64.9 PSF	311.90 LB-FT	270.4 LB	1148.7 LB	1058.4 LB
30 "			137.1 PSF	108.3 PSF	137.1 PSF	108.3 PSF	114.3 PSF	90.2 PSF	114.3 PSF	90.2 PSF	91.4 PSF	72.2 PSF	91.4 PSF	72.2 PSF	68.5 PSF	54.1 PSF	68.5 PSF	54.1 PSF	311.90 LB-FT	221.4 LB	1049.6 LB	1021.0 LB
36 "			116.2 PSF	91.7 PSF	116.2 PSF	91.7 PSF	96.8 PSF	76.4 PSF	96.8 PSF	76.4 PSF	77.5 PSF	61.1 PSF	77.5 PSF	61.1 PSF	58.1 PSF	45.8 PSF	58.1 PSF	45.8 PSF	311.90 LB-FT	187.7 LB	981.6 LB	995.8 LB
18 "	36 "	3780 in²	159.1 PSF	125.6 PSF	139.8 PSF	110.4 PSF	132.6 PSF	104.7 PSF	116.6 PSF	92.0 PSF	106.1 PSF	83.7 PSF	93.4 PSF	73.7 PSF	79.5 PSF	62.8 PSF	70.1 PSF	55.4 PSF	311.90 LB-FT	348.1 LB	1395.1 LB	1206.5 LB
24 "			123.6 PSF	97.6 PSF	118.6 PSF	93.6 PSF	103.0 PSF	81.3 PSF	98.9 PSF	78.0 PSF	82.4 PSF	65.0 PSF	79.2 PSF	62.5 PSF	61.8 PSF	48.8 PSF	59.5 PSF	46.9 PSF	311.90 LB-FT	270.4 LB	1216.4 LB	1126.0 LB
30 "			101.2 PSF	79.9 PSF	101.2 PSF	79.9 PSF	84.3 PSF	66.6 PSF	84.3 PSF	66.6 PSF	67.5 PSF	53.2 PSF	67.5 PSF	53.2 PSF	50.6 PSF	39.9 PSF	50.6 PSF	39.9 PSF	311.90 LB-FT	221.4 LB	1104.9 LB	1076.4 LB
36 "			85.8 PSF	67.7 PSF	85.8 PSF	67.7 PSF	71.5 PSF	56.4 PSF	71.5 PSF	56.4 PSF	57.2 PSF	45.1 PSF	57.2 PSF	45.1 PSF	42.9 PSF	33.8 PSF	42.9 PSF	33.8 PSF	311.90 LB-FT	187.7 LB	1028.6 LB	1042.7 LB
18 "	42 "	5040 in²	119.3 PSF	94.2 PSF	102.5 PSF	80.9 PSF	99.4 PSF	78.5 PSF	85.5 PSF	67.5 PSF	79.5 PSF	62.8 PSF	68.4 PSF	54.0 PSF	59.6 PSF	47.1 PSF	51.4 PSF	40.6 PSF	311.90 LB-FT	348.1 LB	1482.1 LB	1293.6 LB
24 "			92.7 PSF	73.2 PSF	87.2 PSF	68.8 PSF	77.2 PSF	61.0 PSF	72.7 PSF	57.4 PSF	61.8 PSF	48.8 PSF	58.2 PSF	46.0 PSF	46.3 PSF	36.6 PSF	43.7 PSF	34.5 PSF	311.90 LB-FT	270.4 LB	1284.0 LB	1193.6 LB
30 "			75.9 PSF	59.9 PSF	75.9 PSF	59.9 PSF	63.2 PSF	49.9 PSF	63.2 PSF	49.9 PSF	50.6 PSF	39.9 PSF	50.6 PSF	39.9 PSF	37.9 PSF	29.9 PSF	37.9 PSF	29.9 PSF	311.90 LB-FT	221.4 LB	1160.3 LB	1131.8 LB
36 "			64.3 PSF	50.8 PSF	64.3 PSF	50.8 PSF	53.6 PSF	42.3 PSF	53.6 PSF	42.3 PSF	42.9 PSF	33.8 PSF	42.9 PSF	33.8 PSF	32.1 PSF	25.4 PSF	32.1 PSF	25.4 PSF	311.90 LB-FT	187.7 LB	1075.5 LB	1089.6 LB
18 "	48 "	6912 in²	87.0 PSF	68.7 PSF	73.1 PSF	57.7 PSF	72.5 PSF	57.2 PSF	60.9 PSF	48.1 PSF	58.0 PSF	45.8 PSF	48.8 PSF	38.5 PSF	43.5 PSF	34.3 PSF	36.6 PSF	28.9 PSF	311.90 LB-FT	348.1 LB	1569.1 LB	1380.6 LB
24 "			67.6 PSF	53.3 PSF	62.4 PSF	49.2 PSF	56.3 PSF	44.4 PSF	52.0 PSF	41.1 PSF	45.0 PSF	35.5 PSF	41.6 PSF	32.9 PSF	33.8 PSF	26.6 PSF	31.3 PSF	24.7 PSF	311.90 LB-FT	270.4 LB	1351.6 LB	1261.2 LB
30 "			55.3 PSF	43.7 PSF	54.5 PSF	43.0 PSF	46.1 PSF	36.4 PSF	45.4 PSF	35.8 PSF	36.9 PSF	29.1 PSF	36.4 PSF	28.7 PSF	27.6 PSF	21.8 PSF	27.3 PSF	21.5 PSF	311.90 LB-FT	221.4 LB	1215.7 LB	1187.1 LB
36 "			46.9 PSF	37.0 PSF	46.9 PSF	37.0 PSF	39.1 PSF	30.8 PSF	39.1 PSF	30.8 PSF	31.2 PSF	24.7 PSF	31.2 PSF	24.7 PSF	23.4 PSF	18.5 PSF	23.4 PSF	18.5 PSF	311.90 LB-FT	187.7 LB	1122.4 LB	1136.6 LB

FL 16921.1

ENGINEERING EXPRESS®
POSTAL ADDRESS:
2234 NORTH FEDERAL HWY #7664
BOCA RATON, FL 33431
ENGINEERINGEXPRESS.COM

PRECISION ALUMINUM PRODUCTS, INC.
1339 SW 1ST WAY
DEERFIELD BEACH, FL 33441
(954) 480-6919

ALUMINUM A/C STANDS
FLORIDA BUILDING CODE EIGHTH EDITION (2023)
FLORIDA STATEWIDE APPROVAL (FSA FL#16921.1)

REMARKS	DRWN	CHKD	DATE
PREV. SUBMITTAL (20-32768)	CSL	RWN	12/15/20
2023 FBC UPDATE & TECH. CHANGES	MRT	RWN	12/08/23

COPYRIGHT ENGINEERING EXPRESS®

23-69401

SCALE: NTS UNLESS NOTED

12/21/2023 1:55 PM MILTON c:\users\milton\engineering express\production - documents\projects\23-\23-69401 2023 product fbc update fl16921\work\2023 fbc\drawings & cad\23-69401c - fl16921.1 - cad.dwg

"XHD" STAND DESIGN SCHEDULE CONTINUED

DESIGN SCHEDULES NOTES:

1. DESIGN SCHEDULES SHOWN HEREIN ARE REFERENCED TO ALLOWABLE STRENGTH DESIGN (ASD) METHODOLOGY.
2. EMPTY CELLS DENOTES CONDITIONS NOT ALLOWED TO USE.
3. MAXIMUM CALCULATED FACE AREA SHALL BE EQUAL TO OR LESS THAN THE MAXIMUM ALLOWABLE FACE AREA FOR EACH CONFIGURATION.
4. REFERENCE ANCHOR SCHEDULE FOR ANCHOR TYPES LISTED HEREIN.

FRANK BENNARDO, P.E.
PE# 0046549 CA# 9885

FRANK L. BENNARDO LICENSE No PE0046549 STATE OF FLORIDA PROFESSIONAL ENGINEER

12/28/2023

DECEMBER 21, 2023

FL

36" STAND DEPTH: MAX FACE AREA (1656in² - 6912in²), FRAME QUANTITY (3-6 FRAMES)

UNIT TO FRAME RATIO

STAND CLEAR HEIGHT	MAX MEAN UNIT HEIGHT	MAX FACE AREA	MAX FACE AREA : 6 FRAMES				MAX FACE AREA : 5 FRAMES				MAX FACE AREA : 4 FRAMES				MAX FACE AREA : 3 FRAMES				LOAD TRANSFER INFORMATION FOR USE WITH HOST STRUCTURE VERIFICATION ONLY			
			ANCHOR TYPE: 1 OR 4		ANCHORS TYPE: 2 OR 3		ANCHOR TYPE: 1 OR 4		ANCHORS TYPE: 2 OR 3		ANCHOR TYPE: 1 OR 4		ANCHORS TYPE: 2 OR 3		ANCHOR TYPE: 1 OR 4		ANCHORS TYPE: 2 OR 3					
			MAX ALLOWABLE LATERAL LOAD	MAX ALLOWABLE UPLIFT	MAX ALLOWABLE LATERAL LOAD	MAX ALLOWABLE UPLIFT	MAX ALLOWABLE LATERAL LOAD	MAX ALLOWABLE UPLIFT	MAX ALLOWABLE LATERAL LOAD	MAX ALLOWABLE UPLIFT	MAX ALLOWABLE LATERAL LOAD	MAX ALLOWABLE UPLIFT	MAX ALLOWABLE LATERAL LOAD	MAX ALLOWABLE UPLIFT	MAX ALLOWABLE LATERAL LOAD	MAX ALLOWABLE UPLIFT	MAX ALLOWABLE LATERAL LOAD	MAX ALLOWABLE UPLIFT	MAX. BASE MOMENT (M)	MAX. BASE SHEAR (V)	MAX. BASE UPLIFT (T)	MAX. BASE GRAVITY (C)
18 "	24 "	1656 in²	200.0 PSF	157.8 PSF	200.0 PSF	157.8 PSF	200.0 PSF	157.8 PSF	200.0 PSF	157.8 PSF	200.0 PSF	157.8 PSF	200.0 PSF	157.8 PSF	171.3 PSF	135.3 PSF	171.3 PSF	135.3 PSF	311.90 LB-FT	328.5 LB	839.1 LB	686.6 LB
24 "			200.0 PSF	157.8 PSF	200.0 PSF	157.8 PSF	200.0 PSF	157.8 PSF	200.0 PSF	157.8 PSF	178.7 PSF	141.1 PSF	178.7 PSF	141.1 PSF	134.0 PSF	105.8 PSF	134.0 PSF	105.8 PSF	311.90 LB-FT	256.9 LB	742.8 LB	675.0 LB
30 "			200.0 PSF	157.8 PSF	200.0 PSF	157.8 PSF	184.1 PSF	145.3 PSF	184.1 PSF	145.3 PSF	147.2 PSF	116.2 PSF	147.2 PSF	116.2 PSF	110.4 PSF	87.2 PSF	110.4 PSF	87.2 PSF	311.90 LB-FT	211.7 LB	682.9 LB	669.0 LB
36 "			188.1 PSF	148.5 PSF	188.1 PSF	148.5 PSF	156.7 PSF	123.7 PSF	156.7 PSF	123.7 PSF	125.4 PSF	99.0 PSF	125.4 PSF	99.0 PSF	94.0 PSF	74.2 PSF	94.0 PSF	74.2 PSF	311.90 LB-FT	180.2 LB	641.9 LB	665.4 LB
18 "	30 "	2790 in²	200.0 PSF	157.8 PSF	200.0 PSF	157.8 PSF	169.5 PSF	133.8 PSF	169.5 PSF	133.8 PSF	135.6 PSF	107.0 PSF	135.6 PSF	107.0 PSF	101.7 PSF	80.3 PSF	101.7 PSF	80.3 PSF	311.90 LB-FT	328.5 LB	902.8 LB	741.4 LB
24 "			159.1 PSF	125.6 PSF	159.1 PSF	125.6 PSF	132.6 PSF	104.7 PSF	132.6 PSF	104.7 PSF	106.1 PSF	83.7 PSF	106.1 PSF	83.7 PSF	79.5 PSF	62.8 PSF	79.5 PSF	62.8 PSF	311.90 LB-FT	256.9 LB	791.3 LB	717.9 LB
30 "			131.1 PSF	103.5 PSF	131.1 PSF	103.5 PSF	109.2 PSF	86.2 PSF	109.2 PSF	86.2 PSF	87.4 PSF	69.0 PSF	87.4 PSF	69.0 PSF	65.5 PSF	51.7 PSF	65.5 PSF	51.7 PSF	311.90 LB-FT	211.7 LB	720.5 LB	704.3 LB
36 "			111.6 PSF	88.1 PSF	111.6 PSF	88.1 PSF	93.0 PSF	73.4 PSF	93.0 PSF	73.4 PSF	74.4 PSF	58.7 PSF	74.4 PSF	58.7 PSF	55.8 PSF	44.0 PSF	55.8 PSF	44.0 PSF	311.90 LB-FT	180.2 LB	671.9 LB	695.4 LB
18 "	36 "	3780 in²	150.1 PSF	118.5 PSF	150.1 PSF	118.5 PSF	125.1 PSF	98.8 PSF	125.1 PSF	98.8 PSF	100.1 PSF	79.0 PSF	100.1 PSF	79.0 PSF	75.0 PSF	59.2 PSF	75.0 PSF	59.2 PSF	311.90 LB-FT	328.5 LB	959.8 LB	796.1 LB
24 "			117.4 PSF	92.7 PSF	117.4 PSF	92.7 PSF	97.9 PSF	77.2 PSF	97.9 PSF	77.2 PSF	78.3 PSF	61.8 PSF	78.3 PSF	61.8 PSF	58.7 PSF	46.3 PSF	58.7 PSF	46.3 PSF	311.90 LB-FT	256.9 LB	834.1 LB	760.7 LB
30 "			96.7 PSF	76.4 PSF	96.7 PSF	76.4 PSF	80.6 PSF	63.6 PSF	80.6 PSF	63.6 PSF	64.5 PSF	50.9 PSF	64.5 PSF	50.9 PSF	48.3 PSF	38.2 PSF	48.3 PSF	38.2 PSF	311.90 LB-FT	211.7 LB	755.7 LB	739.5 LB
36 "			82.4 PSF	65.0 PSF	82.4 PSF	65.0 PSF	68.6 PSF	54.2 PSF	68.6 PSF	54.2 PSF	54.9 PSF	43.3 PSF	54.9 PSF	43.3 PSF	41.2 PSF	32.5 PSF	41.2 PSF	32.5 PSF	311.90 LB-FT	180.2 LB	702.0 LB	725.5 LB
18 "	42 "	5040 in²	112.6 PSF	88.9 PSF	111.1 PSF	87.7 PSF	93.8 PSF	74.1 PSF	92.7 PSF	73.1 PSF	75.0 PSF	59.2 PSF	74.2 PSF	58.6 PSF	56.3 PSF	44.4 PSF	55.7 PSF	44.0 PSF	311.90 LB-FT	328.5 LB	1014.6 LB	850.9 LB
24 "			88.1 PSF	69.5 PSF	88.1 PSF	69.5 PSF	73.4 PSF	57.9 PSF	73.4 PSF	57.9 PSF	58.7 PSF	46.3 PSF	58.7 PSF	46.3 PSF	44.0 PSF	34.7 PSF	44.0 PSF	34.7 PSF	311.90 LB-FT	256.9 LB	876.9 LB	803.5 LB
30 "			72.5 PSF	57.3 PSF	72.5 PSF	57.3 PSF	60.4 PSF	47.7 PSF	60.4 PSF	47.7 PSF	48.3 PSF	38.2 PSF	48.3 PSF	38.2 PSF	36.2 PSF	28.6 PSF	36.2 PSF	28.6 PSF	311.90 LB-FT	211.7 LB	791.0 LB	774.8 LB
36 "			61.8 PSF	48.8 PSF	61.8 PSF	48.8 PSF	51.5 PSF	40.6 PSF	51.5 PSF	40.6 PSF	41.2 PSF	32.5 PSF	41.2 PSF	32.5 PSF	30.9 PSF	24.4 PSF	30.9 PSF	24.4 PSF	311.90 LB-FT	180.2 LB	732.0 LB	755.5 LB
18 "	48 "	6912 in²	82.1 PSF	64.8 PSF	79.7 PSF	62.9 PSF	68.4 PSF	54.0 PSF	66.5 PSF	52.5 PSF	54.7 PSF	43.2 PSF	53.2 PSF	42.0 PSF	41.0 PSF	32.4 PSF	40.0 PSF	31.5 PSF	311.90 LB-FT	328.5 LB	1069.3 LB	905.6 LB
24 "			64.2 PSF	50.7 PSF	64.2 PSF	50.7 PSF	53.5 PSF	42.2 PSF	53.5 PSF	42.2 PSF	42.8 PSF	33.8 PSF	42.8 PSF	33.8 PSF	32.1 PSF	25.3 PSF	32.1 PSF	25.3 PSF	311.90 LB-FT	256.9 LB	919.8 LB	846.4 LB
30 "			52.9 PSF	41.7 PSF	52.9 PSF	41.7 PSF	44.1 PSF	34.8 PSF	44.1 PSF	34.8 PSF	35.2 PSF	27.8 PSF	35.2 PSF	27.8 PSF	26.4 PSF	20.8 PSF	26.4 PSF	20.8 PSF	311.90 LB-FT	211.7 LB	826.3 LB	810.1 LB
36 "			45.0 PSF	35.5 PSF	45.0 PSF	35.5 PSF	37.5 PSF	29.6 PSF	37.5 PSF	29.6 PSF	30.0 PSF	23.7 PSF	30.0 PSF	23.7 PSF	22.5 PSF	17.7 PSF	22.5 PSF	17.7 PSF	311.90 LB-FT	180.2 LB	762.1 LB	785.6 LB

24" STAND DEPTH: MAX FACE AREA (1104in² - 4608in²), FRAME QUANTITY (2-5 FRAMES)

UNIT TO FRAME RATIO

STAND CLEAR HEIGHT	MAX MEAN UNIT HEIGHT	MAX FACE AREA	MAX FACE AREA : 5 FRAMES				MAX FACE AREA : 4 FRAMES				MAX FACE AREA : 3 FRAMES				MAX FACE AREA : 2 FRAMES				LOAD TRANSFER INFORMATION FOR USE WITH HOST STRUCTURE VERIFICATION ONLY			
			ANCHOR TYPE: 1 OR 4		ANCHORS TYPE: 2 OR 3		ANCHOR TYPE: 1 OR 4		ANCHORS TYPE: 2 OR 3		ANCHOR TYPE: 1 OR 4		ANCHORS TYPE: 2 OR 3		ANCHOR TYPE: 1 OR 4		ANCHORS TYPE: 2 OR 3					
			MAX ALLOWABLE LATERAL LOAD	MAX ALLOWABLE UPLIFT	MAX ALLOWABLE LATERAL LOAD	MAX ALLOWABLE UPLIFT	MAX ALLOWABLE LATERAL LOAD	MAX ALLOWABLE UPLIFT	MAX ALLOWABLE LATERAL LOAD	MAX ALLOWABLE UPLIFT	MAX ALLOWABLE LATERAL LOAD	MAX ALLOWABLE UPLIFT	MAX ALLOWABLE LATERAL LOAD	MAX ALLOWABLE UPLIFT	MAX ALLOWABLE LATERAL LOAD	MAX ALLOWABLE UPLIFT	MAX ALLOWABLE LATERAL LOAD	MAX ALLOWABLE UPLIFT	MAX. BASE MOMENT (M)	MAX. BASE SHEAR (V)	MAX. BASE UPLIFT (T)	MAX. BASE GRAVITY (C)
18 "	24 "	1104 in²	200.0 PSF	157.8 PSF	200.0 PSF	157.8 PSF	200.0 PSF	157.8 PSF	200.0 PSF	157.8 PSF	200.0 PSF	157.8 PSF	200.0 PSF	157.8 PSF	181.6 PSF	143.4 PSF	167.8 PSF	132.5 PSF	311.90 LB-FT	348.1 LB	1209.7 LB	1032.5 LB
24 "			200.0 PSF	157.8 PSF	200.0 PSF	157.8 PSF	200.0 PSF	157.8 PSF	200.0 PSF	157.8 PSF	200.0 PSF	157.8 PSF	200.0 PSF	157.8 PSF	141.0 PSF	111.3 PSF	141.0 PSF	111.3 PSF	311.90 LB-FT	270.4 LB	1069.9 LB	990.8 LB
30 "			200.0 PSF	157.8 PSF	200.0 PSF	157.8 PSF	200.0 PSF	157.8 PSF	200.0 PSF	157.8 PSF	173.3 PSF	136.8 PSF	173.3 PSF	136.8 PSF	115.5 PSF	91.2 PSF	115.5 PSF	91.2 PSF	311.90 LB-FT	221.4 LB	990.4 LB	965.7 LB
36 "			200.0 PSF	157.8 PSF	200.0 PSF	157.8 PSF	195.8 PSF	154.6 PSF	195.8 PSF	154.6 PSF	146.9 PSF	115.9 PSF	146.9 PSF	115.9 PSF	97.9 PSF	77.3 PSF	97.9 PSF	77.3 PSF	311.90 LB-FT	187.7 LB	934.7 LB	948.8 LB
18 "	30 "	1860 in²	200.0 PSF	157.8 PSF	200.0 PSF	157.8 PSF	200.0 PSF	157.8 PSF	193.9 PSF	153.1 PSF	161.7 PSF	127.6 PSF	145.6 PSF	114.9 PSF	107.8 PSF	85.1 PSF	97.3 PSF	76.8 PSF	311.90 LB-FT	348.1 LB	1304.3 LB	1119.5 LB
24 "			200.0 PSF	157.8 PSF	200.0 PSF	157.8 PSF	167.4 PSF	132.2 PSF	163.8 PSF	129.3 PSF	125.6 PSF	99.1 PSF	123.0 PSF	97.1 PSF	83.7 PSF	66.1 PSF	82.2 PSF	64.9 PSF	311.90 LB-FT	270.4 LB	1148.7 LB	1058.4 LB
30 "			171.4 PSF	135.3 PSF	171.4 PSF	135.3 PSF	137.1 PSF	108.3 PSF	137.1 PSF	108.3 PSF	102.8 PSF	81.2 PSF	102.8 PSF	81.2 PSF	68.5 PSF	54.1 PSF	68.5 PSF	54.1 PSF	311.90 LB-FT	221.4 LB	1051.8 LB	1021.0 LB
36 "			145.3 PSF	114.7 PSF	145.3 PSF	114.7 PSF	116.2 PSF	91.7 PSF	116.2 PSF	91.7 PSF	87.1 PSF	68.8 PSF	87.1 PSF	68.8 PSF	58.1 PSF	45.8 PSF	58.1 PSF	45.8 PSF	311.90 LB-FT	187.7 LB	983.9 LB	995.8 LB
18 "	36 "	2520 in²	198.9 PSF	157.0 PSF	174.7 PSF	137.9 PSF	159.1 PSF	125.6 PSF	139.8 PSF	110.4 PSF	119.3 PSF	94.2 PSF	105.0 PSF	82.9 PSF	79.5 PSF	62.8 PSF	70.1 PSF	55.4 PSF	311.90 LB-FT	348.1 LB	1397.3 LB	1206.5 LB
24 "			154.5 PSF	122.0 PSF	148.1 PSF	116.9 PSF	123.6 PSF	97.6 PSF	118.6 PSF	93.6 PSF	92.7 PSF	73.2 PSF	89.0 PSF	70.3 PSF	61.8 PSF	48.8 PSF	59.5 PSF	46.9 PSF	311.90 LB-FT	270.4 LB	1218.6 LB	1126.0 LB
30 "			126.5 PSF	99.9 PSF	126.5 PSF	99.9 PSF	101.2 PSF	79.9 PSF	101.2 PSF	79.9 PSF	75.9 PSF	59.9 PSF	75.9 PSF	59.9 PSF	50.6 PSF	39.9 PSF	50.6 PSF	39.9 PSF	311.90 LB-FT	221.4 LB	1107.2 LB	1076.4 LB
36 "			107.2 PSF	84.6 PSF	107.2 PSF	84.6 PSF	85.8 PSF	67.7 PSF	85.8 PSF	67.7 PSF	64.3 PSF	50.8 PSF	64.3 PSF	50.8 PSF	42.9 PSF	33.8 PSF	42.9 PSF	33.8 PSF	311.90 LB-FT	187.7 LB	1030.8 LB	1042.7 LB
18 "	42 "	3360 in²	149.2 PSF	117.7 PSF	128.1 PSF	101.1 PSF	119.3 PSF	94.2 PSF	102.5 PSF	80.9 PSF	89.5 PSF	70.6 PSF	77.0 PSF	60.7 PSF	59.6 PSF	47.1 PSF	51.4 PSF	40.6 PSF	311.90 LB-FT	348.1 LB	1484.3 LB	1293.6 LB
24 "			115.9 PSF	91.5 PSF	109.0 PSF	86.0 PSF	92.7 PSF	73.2 PSF	87.2 PSF	68.8 PSF	69.5 PSF	54.9 PSF	65.5 PSF	51.7 PSF	46.3 PSF	36.6 PSF	43.7 PSF	34.5 PSF	311.90 LB-FT	270.4 LB	1286.2 LB	1193.6 LB
30 "			94.9 PSF	74.9 PSF	94.9 PSF	74.9 PSF	75.9 PSF	59.9 PSF	75.9 PSF	59.9 PSF	56.9 PSF	44.9 PSF	56.9 PSF	44.9 PSF	37.9 PSF	29.9 PSF	37.9 PSF	29.9 PSF	311.90 LB-FT	221.4 LB	1162.6 LB	1131.8 LB
36 "			80.4 PSF	63.5 PSF	80.4 PSF	63.5 PSF	64.3 PSF	50.8 PSF	64.3 PSF	50.8 PSF	48.2 PSF	38.1 PSF	48.2 PSF	38.1 PSF	32.1 PSF	25.4 PSF	32.1 PSF	25.4 PSF	311.90 LB-FT	187.7 LB	1077.8 LB	1089.6 LB
18 "	48 "	4608 in²	108.7 PSF	85.8 PSF	91.3 PSF	72.1 PSF	87.0 PSF	68.7 PSF	73.1 PSF	57.7 PSF	65.2 PSF	51.5 PSF	54.9 PSF	43.3 PSF	43.5 PSF	34.3 PSF	36.6 PSF	28.9 PSF	311.90 LB-FT	348.1 LB	1571.4 LB	1380.6 LB
24 "			84.5 PSF	66.7 PSF	77.9 PSF	61.5 PSF	67.6 PSF	53.3 PSF	62.4 PSF	49.2 PSF	50.7 PSF	40.0 PSF	46.8 PSF	37.0 PSF	33.8 PSF	26.6 PSF	31.3 PSF	24.7 PSF	311.90 LB-FT	270.4 LB	1353.8 LB	1261.2 LB
30 "			69.2 PSF	54.6 PSF	68.1 PSF	53.7 PSF	55.3 PSF	43.7 PSF	54.5 PSF	43.0 PSF	41.5 PSF	32.7 PSF	40.9 PSF	32.3 PSF	27.6 PSF	21.8 PSF	27.3 PSF	21.5 PSF	311.90 LB-FT	221.4 LB	1217.9 LB	1187.1 LB
36 "			58.6 PSF	46.3 PSF	58.6 PSF	46.3 PSF	46.9 PSF	37.0 PSF	46.9 PSF	37.0 PSF	35.1 PSF	27.7 PSF	35.1 PSF	27.7 PSF	23.4 PSF	18.5 PSF	23.4 PSF	18.5 PSF	311.90 LB-FT	187.7 LB	1124.7 LB	1136.6 LB

36" STAND DEPTH: MAX FACE AREA (1104in² - 4608in²), FRAME QUANTITY (2-5 FRAMES)

UNIT TO FRAME RATIO

STAND CLEAR HEIGHT	MAX MEAN UNIT HEIGHT	MAX FACE AREA	MAX FACE AREA : 5 FRAMES				MAX FACE AREA : 4 FRAMES				MAX FACE AREA : 3 FRAMES				MAX FACE AREA : 2 FRAMES				LOAD TRANSFER INFORMATION FOR USE WITH HOST STRUCTURE VERIFICATION ONLY			
			ANCHOR TYPE: 1 OR 4		ANCHORS TYPE: 2 OR 3		ANCHOR TYPE: 1 OR 4		ANCHORS TYPE: 2 OR 3		ANCHOR TYPE: 1 OR 4		ANCHORS TYPE: 2 OR 3		ANCHOR TYPE: 1 OR 4		ANCHORS TYPE: 2 OR 3					
			MAX ALLOWABLE LATERAL LOAD	MAX ALLOWABLE UPLIFT	MAX ALLOWABLE LATERAL LOAD	MAX ALLOWABLE UPLIFT	MAX ALLOWABLE LATERAL LOAD	MAX ALLOWABLE UPLIFT	MAX ALLOWABLE LATERAL LOAD	MAX ALLOWABLE UPLIFT	MAX ALLOWABLE LATERAL LOAD	MAX ALLOWABLE UPLIFT	MAX ALLOWABLE LATERAL LOAD	MAX ALLOWABLE UPLIFT	MAX ALLOWABLE LATERAL LOAD	MAX ALLOWABLE UPLIFT	MAX ALLOWABLE LATERAL LOAD	MAX ALLOWABLE UPLIFT	MAX. BASE MOMENT (M)	MAX. BASE SHEAR (V)	MAX. BASE UPLIFT (T)	MAX. BASE GRAVITY (C)
18 "	24 "	1104 in²	200.0 PSF	157.8 PSF	200.0 PSF	157.8 PSF	200.0 PSF	157.8 PSF	200.0 PSF	157.8 PSF	200.0 PSF	157.8 PSF	200.0 PSF	157.8 PSF	171.3 PSF	135.3 PSF	171.3 PSF	135.3 PSF	311.90 LB-FT	328.5 LB	839.1 LB	686.6 LB
24 "			200.0 PSF	157.8 PSF	200.0 PSF	157.8 PSF	200.0 PSF	157.8 PSF	200.0 PSF	157.8 PSF	200.0 PSF	157.8 PSF	200.0 PSF	157.8 PSF	134.0 PSF	105.8 PSF	134.0 PSF	105.8 PSF	311.90 LB-FT	256.9 LB	740.4 LB	675.0 LB
30 "			200.0 PSF	157.8 PSF	200.0 PSF	157.8 PSF	200.0 PSF	157.8 PSF	200.0 PSF	157.8 PSF	165.6 PSF	130.8 PSF	165.6 PSF	130.8 PSF	110.4 PSF	87.2 PSF	110.4 PSF	87.2 PSF	311.90 LB-FT	211.7 LB	681.4 LB	669.0 LB
36 "			200.0 PSF	157.8 PSF	200.0 PSF	157.8 PSF	188.1 PSF	148.5 PSF	188.1 PSF	148.5 PSF	141.0 PSF	111.3 PSF	141.0 PSF	111.3 PSF	94.0 PSF	74.2 PSF	94.0 PSF	74.2 PSF	311.90 LB-FT	180.2 LB	641.9 LB	665.4 LB
18 "	30 "	1860 in²	200.0 PSF	157.8 PSF	200.0 PSF	157.8 PSF	200.0 PSF	157.8 PSF	200.0 PSF	157.8 PSF	152.5 PSF	120.4 PSF	152.5 PSF	120.4 PSF	101.7 PSF	80.3 PSF	101.7 PSF	80.3 PSF	311.90 LB-FT	328.5 LB	901.3 LB	741.4 LB
24 "			198.9 PSF	157.0 PSF	198.9 PSF	157.0 PSF	159.1 PSF	125.6 PSF	159.1 PSF	125.6 PSF	119.3 PSF	94.2 PSF	119.3 PSF	94.2 PSF	79.5 PSF	62.8 PSF	79.5 PSF	62.8 PSF	311.90 LB-FT	256.9 LB	793.5 LB	717.9 LB
30 "			163.9 PSF	129.4 PSF	163.9 PSF	129.4 PSF	131.1 PSF	103.5 PSF	131.1 PSF	103.5 PSF	98.3 PSF	77.6 PSF	98.3 PSF	77.6 PSF	65.5 PSF	51.7 PSF	65.5 PSF	51.7 PSF	311.90 LB-FT	211.7 LB	722.7 LB	704.3 LB
36 "			139.5 PSF	110.1 PSF	139.5 PSF	110.1 PSF	111.6 PSF	88.1 PSF	111.6 PSF	88.1 PSF	83.7 PSF	66.1 PSF	83.7 PSF	66.1 PSF	55.8 PSF	44.0 PSF	55.8 PSF	44.0 PSF	311.90 LB-FT	180.2 LB	674.2 LB	695.4 LB
18 "	36 "	2520 in²	187.7 PSF	148.2 PSF	187.7 PSF	148.2 PSF	150.1 PSF	118.5 PSF	150.1 PSF	118.5 PSF	112.6 PSF	88.9 PSF	112.6 PSF	88.9 PSF	75.0 PSF	59.2 PSF	75.0 PSF	59.2 PSF	311.90 LB-FT	328.5 LB	962.1 LB	796.1 LB
24 "			146.8 PSF	115.9 PSF	146.8 PSF	115.9 PSF	117.4 PSF	92.7 PSF	117.4 PSF	92.7 PSF	88.1 PSF	69.5 PSF	88.1 PSF	69.5 PSF	58.7 PSF	46.3 PSF	58.7 PSF	46.3 PSF	311.90 LB-FT	256.9 LB	836.3 LB	760.7 LB
30 "			120.9 PSF	95.5 PSF	120.9 PSF	95.5 PSF	96.7 PSF	76.4 PSF	96.7 PSF	76.4 PSF	72.5 PSF	57.3 PSF	72.5 PSF	57.3 PSF	48.3 PSF	38.2 PSF	48.3 PSF	38.2 PSF	311.90 LB-FT	211.7 LB	758.0 LB	739.5 LB
36 "			103.0 PSF	81.3 PSF	103.0 PSF	81.3 PSF	82.4 PSF	65.0 PSF	82.4 PSF	65.0 PSF	61.8 PSF	48.8 PSF	61.8 PSF	48.8 PSF	41.2 PSF	32.5 PSF	41.2 PSF	32.5 PSF	311.90 LB-FT	180.2 LB	704.2 LB	725.5 LB
18 "	42 "	3360 in²	140.7 PSF	111.1 PSF	138.8 PSF	109.6 PSF	112.6 PSF	88.9 PSF	111.1 PSF	87.7 PSF	84.4 PSF	66.6 PSF	83.4 PSF	65.9 PSF	56.3 PSF	44.4 PSF	55.7 PSF	44.0 PSF	311.90 LB-FT	328.5 LB	1016.8 LB	850.9 LB
24 "			110.1 PSF	86.9 PSF	110.1 PSF	86.9 PSF	88.1 PSF	69.5 PSF	88.1 PSF	69.5 PSF	66.0 PSF	52.1 PSF	66.0 PSF	52.1 PSF	44.0 PSF	34.7 PSF	44.0 PSF	34.7 PSF	311.90 LB-FT	256.9 LB	879.2 LB	803.5 LB
30 "			90.7 PSF	71.6 PSF	90.7 PSF	71.6 PSF	72.5 PSF	57.3 PSF	72.5 PSF	57.3 PSF	54.4 PSF	42.9 PSF	54.4 PSF	42.9 PSF	36.2 PSF	28.6 PSF	36.2 PSF	28.6 PSF	311.90 LB-FT	211.7 LB	793.3 LB	774.8 LB
36 "			77.2 PSF	61.0 PSF	77.2 PSF	61.0 PSF	61.8 PSF	48.8 PSF	61.8 PSF	48.8 PSF	46.3 PSF	36.6 PSF	46.3 PSF	36.6 PSF	30.9 PSF	24.4 PSF	30.9 PSF	24.4 PSF	311.90 LB-FT	180.2 LB	734.3 LB	755.5 LB
18 "	48 "	4608 in²	102.6 PSF	81.0 PSF	99.6 PSF	78.6 PSF	82.1 PSF	64.8 PSF	79.7 PSF	62.9 PSF	61.5 PSF	48.6 PSF	59.8 PSF	47.2 PSF	41.0 PSF	32.4 PSF	40.0 PSF	31.5 PSF	311.90 LB-FT	328.5 LB	1071.6 LB	905.6 LB
24 "			80.3 PSF	63.4 PSF	80.3 PSF	63.4 PSF	64.2 PSF	50.7 PSF	64.2 PSF	50.7 PSF	48.1 PSF	38.0 PSF	48.1 PSF	38.0 PSF	32.1 PSF	25.3 PSF	32.1 PSF	25.3 PSF	311.90 LB-FT	256.9 LB	922.0 LB	846.4 LB
30 "			66.1 PSF	52.2 PSF	66.1 PSF	52.2 PSF	52.9 PSF	41.7 PSF	52.9 PSF	41.7 PSF	39.6 PSF	31.3 PSF	39.6 PSF	31.3 PSF	26.4 PSF	20.8 PSF	26.4 PSF	20.8 PSF	311.90 LB-FT	211.7 LB	828.6 LB	810.1 LB
36 "			56.3 PSF	44.4 PSF	56.3 PSF	44.4 PSF	45.0 PSF	35.5 PSF	45.0 PSF	35.5 PSF	33.8 PSF	26.6 PSF	33.8 PSF	26.6 PSF	22.5 PSF	17.7 PSF	22.5 PSF	17.7 PSF	311.90 LB-FT	180.2 LB	764.3 LB	785.6 LB

FL 16921.1

ENGINEERING EXPRESS®
POSTAL ADDRESS:
2234 NORTH FEDERAL HWY #7664
BOCA RATON, FL 33431
ENGINEERINGEXPRESS.COM

PRECISION ALUMINUM PRODUCTS, INC.
1339 SW 1ST WAY
DEERFIELD BEACH, FL 33441
(954) 480-6919

ALUMINUM A/C STANDS
FLORIDA BUILDING CODE EIGHTH EDITION (2023)
FLORIDA STATEWIDE APPROVAL (FSA FL# 16921.1)

REMARKS	DRWN	CHKD	DATE
PREV. SUBMITTAL (20-32768)	CSL	RWN	12/15/20
2023 FBC UPDATE & TECH. CHANGES	MRT	RWN	12/08/23

COPYRIGHT ENGINEERING EXPRESS®

23-69401

SCALE: NTS UNLESS NOTED

12/21/2023 1:55 PM MILTON c:\users\milton\engineering express\production - documents\projects\23-123-69401 2023 product fbc update fl16921\work\2023 fbc\drawings & cad\23-69401c - fl16921.1 - cad.dwg

"XHD" STAND DESIGN SCHEDULE CONTINUED

DESIGN SCHEDULES NOTES:

1. DESIGN SCHEDULES SHOWN HEREIN ARE REFERENCED TO ALLOWABLE STRENGTH DESIGN (ASD) METHODOLOGY.

2. EMPTY CELLS DENOTES CONDITIONS NOT ALLOWED TO USE.

3. MAXIMUM CALCULATED FACE AREA SHALL BE EQUAL TO OR LESS THAN THE MAXIMUM ALLOWABLE FACE AREA FOR EACH CONFIGURATION.

4. REFERENCE ANCHOR SCHEDULE FOR ANCHOR TYPES LISTED HEREIN.

24" STAND DEPTH: MAX FACE AREA (552in² - 2304in²), FRAME QUANTITY (2-3 FRAMES)

STAND CLEAR HEIGHT	MAX MEAN UNIT HEIGHT	MAX FACE AREA	UNIT TO FRAME RATIO: MAX FACE AREA : 3 FRAMES, ANCHOR TYPE: 1 OR 4 — MAX ALLOWABLE LATERAL LOAD	MAX ALLOWABLE UPLIFT	ANCHOR TYPE: 2 OR 3 — MAX ALLOWABLE LATERAL LOAD	MAX ALLOWABLE UPLIFT	MAX FACE AREA : 2 FRAMES, ANCHOR TYPE: 1 OR 4 — MAX ALLOWABLE LATERAL LOAD	MAX ALLOWABLE UPLIFT	ANCHOR TYPE: 2 OR 3 — MAX ALLOWABLE LATERAL LOAD	MAX ALLOWABLE UPLIFT	LOAD TRANSFER INFORMATION FOR USE WITH HOST STRUCTURE VERIFICATION ONLY: MAX. BASE MOMENT (M)	MAX. BASE SHEAR (V)	MAX. BASE UPLIFT (T)	MAX. BASE GRAVITY (C)
18 "	24 "	552 in²	200.0 PSF	157.8 PSF	200.0 PSF	157.8 PSF	200.0 PSF	157.8 PSF	200.0 PSF	157.8 PSF	171.70 LB-FT	191.6 LB	667.1 LB	556.2 LB
24 "			200.0 PSF	157.8 PSF	200.0 PSF	157.8 PSF	200.0 PSF	157.8 PSF	200.0 PSF	157.8 PSF	221.00 LB-FT	191.6 LB	762.9 LB	652.1 LB
30 "			200.0 PSF	157.8 PSF	200.0 PSF	157.8 PSF	200.0 PSF	157.8 PSF	200.0 PSF	157.8 PSF	269.90 LB-FT	191.6 LB	858.8 LB	747.9 LB
36 "			200.0 PSF	157.8 PSF	200.0 PSF	157.8 PSF	195.8 PSF	154.6 PSF	195.8 PSF	154.6 PSF	311.90 LB-FT	187.7 LB	934.7 LB	828.8 LB
18 "	30 "	930 in²	200.0 PSF	157.8 PSF	200.0 PSF	157.8 PSF	200.0 PSF	157.8 PSF	193.9 PSF	153.1 PSF	289.30 LB-FT	322.9 LB	1212.4 LB	935.7 LB
24 "			200.0 PSF	157.8 PSF	200.0 PSF	157.8 PSF	167.4 PSF	132.2 PSF	163.8 PSF	129.3 PSF	311.90 LB-FT	270.4 LB	1148.7 LB	938.4 LB
30 "			200.0 PSF	157.8 PSF	200.0 PSF	157.8 PSF	137.1 PSF	108.3 PSF	137.1 PSF	108.3 PSF	311.90 LB-FT	221.4 LB	1049.6 LB	901.0 LB
36 "			174.3 PSF	137.6 PSF	174.3 PSF	137.6 PSF	116.2 PSF	91.7 PSF	116.2 PSF	91.7 PSF	311.90 LB-FT	187.7 LB	985.4 LB	875.8 LB
18 "	36 "	1260 in²	200.0 PSF	157.8 PSF	200.0 PSF	157.8 PSF	159.1 PSF	125.6 PSF	139.8 PSF	110.4 PSF	311.90 LB-FT	348.1 LB	1395.1 LB	1086.5 LB
24 "			185.4 PSF	146.4 PSF	177.7 PSF	140.3 PSF	123.6 PSF	97.6 PSF	118.6 PSF	93.6 PSF	311.90 LB-FT	270.4 LB	1220.1 LB	1006.0 LB
30 "			151.8 PSF	119.9 PSF	151.8 PSF	119.9 PSF	101.2 PSF	79.9 PSF	101.2 PSF	79.9 PSF	311.90 LB-FT	221.4 LB	1108.7 LB	956.4 LB
36 "			128.7 PSF	101.6 PSF	128.7 PSF	101.6 PSF	85.8 PSF	67.7 PSF	85.8 PSF	67.7 PSF	311.90 LB-FT	187.7 LB	1032.3 LB	922.7 LB
18 "	42 "	1680 in²	179.0 PSF	141.3 PSF	153.6 PSF	121.3 PSF	119.3 PSF	94.2 PSF	102.5 PSF	80.9 PSF	311.90 LB-FT	348.1 LB	1485.8 LB	1173.6 LB
24 "			139.0 PSF	109.8 PSF	130.7 PSF	103.2 PSF	92.7 PSF	73.2 PSF	87.2 PSF	68.8 PSF	311.90 LB-FT	270.4 LB	1287.7 LB	1073.6 LB
30 "			113.9 PSF	89.9 PSF	113.8 PSF	89.9 PSF	75.9 PSF	59.9 PSF	75.9 PSF	59.9 PSF	311.90 LB-FT	221.4 LB	1164.1 LB	1011.8 LB
36 "			96.5 PSF	76.2 PSF	96.5 PSF	76.2 PSF	64.3 PSF	50.8 PSF	64.3 PSF	50.8 PSF	311.90 LB-FT	187.7 LB	1079.3 LB	969.6 LB
18 "	48 "	2304 in²	130.5 PSF	103.0 PSF	109.5 PSF	86.5 PSF	87.0 PSF	68.7 PSF	73.1 PSF	57.7 PSF	311.90 LB-FT	348.1 LB	1572.9 LB	1260.6 LB
24 "			101.4 PSF	80.0 PSF	93.5 PSF	73.8 PSF	67.6 PSF	53.3 PSF	62.4 PSF	49.2 PSF	311.90 LB-FT	270.4 LB	1355.3 LB	1141.2 LB
30 "			83.0 PSF	65.5 PSF	81.6 PSF	64.4 PSF	55.3 PSF	43.7 PSF	54.5 PSF	43.0 PSF	311.90 LB-FT	221.4 LB	1219.4 LB	1067.1 LB
36 "			70.3 PSF	55.5 PSF	70.3 PSF	55.5 PSF	46.9 PSF	37.0 PSF	46.9 PSF	37.0 PSF	311.90 LB-FT	187.7 LB	1126.2 LB	1016.6 LB

36" STAND DEPTH: MAX FACE AREA (552in² - 2304in²), FRAME QUANTITY (2-3 FRAMES)

STAND CLEAR HEIGHT	MAX MEAN UNIT HEIGHT	MAX FACE AREA	UNIT TO FRAME RATIO: MAX FACE AREA : 3 FRAMES, ANCHOR TYPE: 1 OR 4 — MAX ALLOWABLE LATERAL LOAD	MAX ALLOWABLE UPLIFT	ANCHOR TYPE: 2 OR 3 — MAX ALLOWABLE LATERAL LOAD	MAX ALLOWABLE UPLIFT	MAX FACE AREA : 2 FRAMES, ANCHOR TYPE: 1 OR 4 — MAX ALLOWABLE LATERAL LOAD	MAX ALLOWABLE UPLIFT	ANCHOR TYPE: 2 OR 3 — MAX ALLOWABLE LATERAL LOAD	MAX ALLOWABLE UPLIFT	LOAD TRANSFER INFORMATION FOR USE WITH HOST STRUCTURE VERIFICATION ONLY: MAX. BASE MOMENT (M)	MAX. BASE SHEAR (V)	MAX. BASE UPLIFT (T)	MAX. BASE GRAVITY (C)
18 "	24 "	552 in²	200.0 PSF	157.8 PSF	200.0 PSF	157.8 PSF	200.0 PSF	157.8 PSF	200.0 PSF	157.8 PSF	181.90 LB-FT	191.6 LB	491.4 LB	380.5 LB
24 "			200.0 PSF	157.8 PSF	200.0 PSF	157.8 PSF	200.0 PSF	157.8 PSF	200.0 PSF	157.8 PSF	232.60 LB-FT	191.6 LB	555.3 LB	444.4 LB
30 "			200.0 PSF	157.8 PSF	200.0 PSF	157.8 PSF	200.0 PSF	157.8 PSF	200.0 PSF	157.8 PSF	282.30 LB-FT	191.6 LB	619.2 LB	508.3 LB
36 "			200.0 PSF	157.8 PSF	200.0 PSF	157.8 PSF	188.1 PSF	148.5 PSF	188.1 PSF	148.5 PSF	311.90 LB-FT	180.2 LB	641.9 LB	545.4 LB
18 "	30 "	930 in²	200.0 PSF	157.8 PSF	200.0 PSF	157.8 PSF	200.0 PSF	157.8 PSF	200.0 PSF	157.8 PSF	306.60 LB-FT	322.9 LB	889.5 LB	612.8 LB
24 "			200.0 PSF	157.8 PSF	200.0 PSF	157.8 PSF	159.1 PSF	125.6 PSF	159.1 PSF	125.6 PSF	311.90 LB-FT	256.9 LB	791.3 LB	597.9 LB
30 "			196.6 PSF	155.2 PSF	196.6 PSF	155.2 PSF	131.1 PSF	103.5 PSF	131.1 PSF	103.5 PSF	311.90 LB-FT	211.7 LB	724.2 LB	584.3 LB
36 "			167.4 PSF	132.2 PSF	167.4 PSF	132.2 PSF	111.6 PSF	88.1 PSF	111.6 PSF	88.1 PSF	311.90 LB-FT	180.2 LB	675.7 LB	575.4 LB
18 "	36 "	1260 in²	200.0 PSF	157.8 PSF	200.0 PSF	157.8 PSF	150.1 PSF	118.5 PSF	150.1 PSF	118.5 PSF	311.90 LB-FT	328.5 LB	959.8 LB	676.1 LB
24 "			176.2 PSF	139.1 PSF	176.2 PSF	139.1 PSF	117.4 PSF	92.7 PSF	117.4 PSF	92.7 PSF	311.90 LB-FT	256.9 LB	837.8 LB	640.7 LB
30 "			145.1 PSF	114.6 PSF	145.1 PSF	114.6 PSF	96.7 PSF	76.4 PSF	96.7 PSF	76.4 PSF	311.90 LB-FT	211.7 LB	759.5 LB	619.5 LB
36 "			123.6 PSF	97.6 PSF	123.6 PSF	97.6 PSF	82.4 PSF	65.0 PSF	82.4 PSF	65.0 PSF	311.90 LB-FT	180.2 LB	705.7 LB	605.5 LB
18 "	42 "	1680 in²	168.9 PSF	133.3 PSF	166.5 PSF	131.5 PSF	112.6 PSF	88.9 PSF	111.1 PSF	87.7 PSF	311.90 LB-FT	328.5 LB	1018.3 LB	730.9 LB
24 "			132.1 PSF	104.3 PSF	132.1 PSF	104.3 PSF	88.1 PSF	69.5 PSF	88.1 PSF	69.5 PSF	311.90 LB-FT	256.9 LB	880.7 LB	683.5 LB
30 "			108.8 PSF	85.9 PSF	108.8 PSF	85.9 PSF	72.5 PSF	57.3 PSF	72.5 PSF	57.3 PSF	311.90 LB-FT	211.7 LB	794.8 LB	654.8 LB
36 "			92.7 PSF	73.2 PSF	92.7 PSF	73.2 PSF	61.8 PSF	48.8 PSF	61.8 PSF	48.8 PSF	311.90 LB-FT	180.2 LB	735.8 LB	635.5 LB
18 "	48 "	2304 in²	123.1 PSF	97.2 PSF	119.5 PSF	94.3 PSF	82.1 PSF	64.8 PSF	79.7 PSF	62.9 PSF	311.90 LB-FT	328.5 LB	1073.1 LB	785.6 LB
24 "			96.3 PSF	76.0 PSF	96.3 PSF	76.0 PSF	64.2 PSF	50.7 PSF	64.2 PSF	50.7 PSF	311.90 LB-FT	256.9 LB	923.5 LB	726.4 LB
30 "			79.3 PSF	62.6 PSF	79.3 PSF	62.6 PSF	52.9 PSF	41.7 PSF	52.9 PSF	41.7 PSF	311.90 LB-FT	211.7 LB	830.1 LB	690.1 LB
36 "			67.6 PSF	53.3 PSF	67.6 PSF	53.3 PSF	45.0 PSF	35.5 PSF	45.0 PSF	35.5 PSF	311.90 LB-FT	180.2 LB	765.8 LB	665.6 LB

"FIXED HD" STAND DESIGN SCHEDULE

48" STAND DEPTH: MAX FACE AREA (2760in² - 11520in²), FRAME QUANTITY (5-8 FRAMES)

STAND CLEAR HEIGHT	MAX MEAN UNIT HEIGHT	MAX FACE AREA	UNIT TO FRAME RATIO: MAX FACE AREA : 8 FRAMES, ANCHOR TYPE: 1 OR 4 — MAX ALLOWABLE LATERAL LOAD	MAX ALLOWABLE UPLIFT	ANCHORS TYPE: 2 OR 3 — MAX ALLOWABLE LATERAL LOAD	MAX ALLOWABLE UPLIFT	MAX FACE AREA : 7 FRAMES, ANCHOR TYPE: 1 OR 4 — MAX ALLOWABLE LATERAL LOAD	MAX ALLOWABLE UPLIFT	ANCHORS TYPE: 2 OR 3 — MAX ALLOWABLE LATERAL LOAD	MAX ALLOWABLE UPLIFT	MAX FACE AREA : 6 FRAMES, ANCHOR TYPE: 1 OR 4 — MAX ALLOWABLE LATERAL LOAD	MAX ALLOWABLE UPLIFT	ANCHORS TYPE: 2 OR 3 — MAX ALLOWABLE LATERAL LOAD	MAX ALLOWABLE UPLIFT	MAX FACE AREA : 5 FRAMES, ANCHOR TYPE: 1 OR 4 — MAX ALLOWABLE LATERAL LOAD	MAX ALLOWABLE UPLIFT	ANCHORS TYPE: 2 OR 3 — MAX ALLOWABLE LATERAL LOAD	MAX ALLOWABLE UPLIFT	LOAD TRANSFER INFORMATION FOR USE WITH HOST STRUCTURE VERIFICATION ONLY: MAX. BASE MOMENT (M)	MAX. BASE SHEAR (V)	MAX. BASE UPLIFT (T)	MAX. BASE GRAVITY (C)
18 "	24 "	2760 in²	200.0 PSF	157.8 PSF	200.0 PSF	157.8 PSF	193.7 PSF	152.9 PSF	193.7 PSF	152.9 PSF	166.0 PSF	131.0 PSF	166.0 PSF	131.0 PSF	138.3 PSF	109.2 PSF	138.3 PSF	109.2 PSF	247.00 LB-FT	265.2 LB	558.0 LB	374.0 LB
24 "			172.8 PSF	136.4 PSF	172.8 PSF	136.4 PSF	151.2 PSF	119.4 PSF	151.2 PSF	119.4 PSF	129.6 PSF	102.3 PSF	129.6 PSF	102.3 PSF	108.0 PSF	85.2 PSF	108.0 PSF	85.2 PSF	247.00 LB-FT	207.0 LB	485.8 LB	373.3 LB
30 "			142.1 PSF	112.2 PSF	142.1 PSF	112.2 PSF	124.3 PSF	98.1 PSF	124.3 PSF	98.1 PSF	106.6 PSF	84.1 PSF	106.6 PSF	84.1 PSF	88.8 PSF	70.1 PSF	88.8 PSF	70.1 PSF	247.00 LB-FT	170.2 LB	439.6 LB	373.6 LB
36 "			120.8 PSF	95.4 PSF	120.8 PSF	95.4 PSF	105.7 PSF	83.4 PSF	105.7 PSF	83.4 PSF	90.6 PSF	71.5 PSF	90.6 PSF	71.5 PSF	75.5 PSF	59.6 PSF	75.5 PSF	59.6 PSF	247.00 LB-FT	144.7 LB	407.9 LB	374.0 LB
18 "	30 "	4650 in²	131.4 PSF	103.7 PSF	131.4 PSF	103.7 PSF	114.9 PSF	90.7 PSF	114.9 PSF	90.7 PSF	98.5 PSF	77.8 PSF	98.5 PSF	77.8 PSF	82.1 PSF	64.8 PSF	82.1 PSF	64.8 PSF	247.00 LB-FT	265.2 LB	593.1 LB	407.2 LB
24 "			102.5 PSF	80.9 PSF	102.5 PSF	80.9 PSF	89.7 PSF	70.8 PSF	89.7 PSF	70.8 PSF	76.9 PSF	60.7 PSF	76.9 PSF	60.7 PSF	64.1 PSF	50.6 PSF	64.1 PSF	50.6 PSF	247.00 LB-FT	207.0 LB	511.7 LB	399.2 LB
30 "			84.3 PSF	66.6 PSF	84.3 PSF	66.6 PSF	73.8 PSF	58.2 PSF	73.8 PSF	58.2 PSF	63.2 PSF	49.9 PSF	63.2 PSF	49.9 PSF	52.7 PSF	41.6 PSF	52.7 PSF	41.6 PSF	247.00 LB-FT	170.2 LB	460.9 LB	394.9 LB
36 "			71.7 PSF	56.6 PSF	71.7 PSF	56.6 PSF	62.7 PSF	49.5 PSF	62.7 PSF	49.5 PSF	53.8 PSF	42.4 PSF	53.8 PSF	42.4 PSF	44.8 PSF	35.3 PSF	44.8 PSF	35.3 PSF	247.00 LB-FT	144.7 LB	426.0 LB	392.1 LB
18 "	36 "	6300 in²	96.9 PSF	76.5 PSF	96.9 PSF	76.5 PSF	84.8 PSF	67.0 PSF	84.8 PSF	67.0 PSF	72.7 PSF	57.4 PSF	72.7 PSF	57.4 PSF	60.6 PSF	47.8 PSF	60.6 PSF	47.8 PSF	247.00 LB-FT	265.2 LB	626.3 LB	440.3 LB
24 "			75.7 PSF	59.7 PSF	75.7 PSF	59.7 PSF	66.2 PSF	52.3 PSF	66.2 PSF	52.3 PSF	56.7 PSF	44.8 PSF	56.7 PSF	44.8 PSF	47.3 PSF	37.3 PSF	47.3 PSF	37.3 PSF	247.00 LB-FT	207.0 LB	537.6 LB	425.1 LB
30 "			62.2 PSF	49.1 PSF	62.2 PSF	49.1 PSF	54.4 PSF	43.0 PSF	54.4 PSF	43.0 PSF	46.7 PSF	36.8 PSF	46.7 PSF	36.8 PSF	38.9 PSF	30.7 PSF	38.9 PSF	30.7 PSF	247.00 LB-FT	170.2 LB	482.2 LB	416.1 LB
36 "			52.9 PSF	41.8 PSF	52.9 PSF	41.8 PSF	46.3 PSF	36.5 PSF	46.3 PSF	36.5 PSF	39.7 PSF	31.3 PSF	39.7 PSF	31.3 PSF	33.0 PSF	26.1 PSF	33.0 PSF	26.1 PSF	247.00 LB-FT	144.7 LB	444.1 LB	410.2 LB
18 "	42 "	8400 in²	72.7 PSF	57.4 PSF	72.7 PSF	57.4 PSF	63.6 PSF	50.2 PSF	63.6 PSF	50.2 PSF	54.5 PSF	43.0 PSF	54.5 PSF	43.0 PSF	45.4 PSF	35.8 PSF	45.4 PSF	35.8 PSF	247.00 LB-FT	265.2 LB	659.4 LB	473.5 LB
24 "			56.7 PSF	44.8 PSF	56.7 PSF	44.8 PSF	49.6 PSF	39.2 PSF	49.6 PSF	39.2 PSF	42.5 PSF	33.6 PSF	42.5 PSF	33.6 PSF	35.4 PSF	28.0 PSF	35.4 PSF	28.0 PSF	247.00 LB-FT	207.0 LB	563.5 LB	451.0 LB
30 "			46.7 PSF	36.8 PSF	46.7 PSF	36.8 PSF	40.8 PSF	32.2 PSF	40.8 PSF	32.2 PSF	35.0 PSF	27.6 PSF	35.0 PSF	27.6 PSF	29.1 PSF	23.0 PSF	29.1 PSF	23.0 PSF	247.00 LB-FT	170.2 LB	503.5 LB	437.4 LB
36 "			39.7 PSF	31.3 PSF	39.7 PSF	31.3 PSF	34.7 PSF	27.4 PSF	34.7 PSF	27.4 PSF	29.7 PSF	23.5 PSF	29.7 PSF	23.5 PSF	24.8 PSF	19.5 PSF	24.8 PSF	19.5 PSF	247.00 LB-FT	144.7 LB	462.2 LB	428.3 LB
18 "	48 "	11520 in²	53.0 PSF	41.8 PSF	53.0 PSF	41.8 PSF	46.4 PSF	36.6 PSF	46.4 PSF	36.6 PSF	39.7 PSF	31.4 PSF	39.7 PSF	31.4 PSF	33.1 PSF	26.1 PSF	33.1 PSF	26.1 PSF	247.00 LB-FT	265.2 LB	692.6 LB	506.6 LB
24 "			41.4 PSF	32.6 PSF	41.4 PSF	32.6 PSF	36.2 PSF	28.6 PSF	36.2 PSF	28.6 PSF	31.0 PSF	24.5 PSF	31.0 PSF	24.5 PSF	25.8 PSF	20.4 PSF	25.8 PSF	20.4 PSF	247.00 LB-FT	207.0 LB	589.4 LB	476.9 LB
30 "			34.0 PSF	26.8 PSF	34.0 PSF	26.8 PSF	29.7 PSF	23.5 PSF	29.7 PSF	23.5 PSF	25.5 PSF	20.1 PSF	25.5 PSF	20.1 PSF	21.2 PSF	16.8 PSF	21.2 PSF	16.8 PSF	247.00 LB-FT	170.2 LB	524.7 LB	458.7 LB
36 "			28.9 PSF	22.8 PSF	28.9 PSF	22.8 PSF	25.3 PSF	20.0 PSF	25.3 PSF	20.0 PSF	21.7 PSF	17.1 PSF	21.7 PSF	17.1 PSF					247.00 LB-FT	144.7 LB	480.2 LB	423.9 LB

FRANK BENNARDO, P.E.
PE# 0046549 CA# 9885

FRANK L. BENNARDO LICENSE No PE0046549 STATE OF FLORIDA PROFESSIONAL ENGINEER

12/28/2023

DECEMBER 21, 2023

FL

FL 16921.1

ENGINEERING EXPRESS®
POSTAL ADDRESS:
2234 NORTH FEDERAL HWY #7664
BOCA RATON, FL 33431
ENGINEERINGEXPRESS.COM

PRECISION ALUMINUM PRODUCTS, INC.
1339 SW 1ST WAY
DEERFIELD BEACH, FL 33441
(954) 480-6919

ALUMINUM A/C STANDS
FLORIDA BUILDING CODE EIGHTH EDITION (2023)
FLORIDA STATEWIDE APPROVAL (FSA FL# 16921.1)

REMARKS	DRWN	CHKD	DATE
PREV. SUBMITTAL (20-32768)	CSL	RWN	12/15/20
2023 FBC UPDATE & TECH. CHANGES	MRT	RWN	12/08/23

COPYRIGHT ENGINEERING EXPRESS®

23-69401

SCALE: NTS UNLESS NOTED

12/21/2023 1:55 PM MILTON c:\users\milton\engineering express\production - documents\projects\23-\23-69401 2023 product fbc update fl16921\work\2023 fbc\drawings & cad\23-69401c - fl16921.1 - cad.dwg

"FIXED HD" STAND DESIGN SCHEDULE CONTINUED

DESIGN SCHEDULES NOTES:

1. DESIGN SCHEDULES SHOWN HEREIN ARE REFERENCED TO ALLOWABLE STRENGTH DESIGN (ASD) METHODOLOGY.
2. EMPTY CELLS DENOTES CONDITIONS NOT ALLOWED TO USE.
3. MAXIMUM CALCULATED FACE AREA SHALL BE EQUAL TO OR LESS THAN THE MAXIMUM ALLOWABLE FACE AREA FOR EACH CONFIGURATION.
4. REFERENCE ANCHOR SCHEDULE FOR ANCHOR TYPES LISTED HEREIN.

FRANK BENNARDO, P.E.
PE# 0046549 CA# 9885

FRANK L. BENNARDO LICENSE No PE0046549 STATE OF FLORIDA PROFESSIONAL ENGINEER

12/28/2023

DECEMBER 21, 2023

FL

48" STAND DEPTH: MAX FACE AREA (2208in² - 9216in²), FRAME QUANTITY (4-7 FRAMES)

STAND CLEAR HEIGHT	MAX MEAN UNIT HEIGHT	MAX FACE AREA	UNIT TO FRAME RATIO																LOAD TRANSFER INFORMATION FOR USE WITH HOST STRUCTURE VERIFICATION ONLY			
			MAX FACE AREA : 7 FRAMES				MAX FACE AREA : 6 FRAMES				MAX FACE AREA : 5 FRAMES				MAX FACE AREA : 4 FRAMES							
			ANCHOR TYPE: 1 OR 4		ANCHORS TYPE: 2 OR 3		ANCHOR TYPE: 1 OR 4		ANCHORS TYPE: 2 OR 3		ANCHOR TYPE: 1 OR 4		ANCHORS TYPE: 2 OR 3		ANCHOR TYPE: 1 OR 4		ANCHORS TYPE: 2 OR 3					
			MAX ALLOWABLE LATERAL LOAD	MAX ALLOWABLE UPLIFT	MAX ALLOWABLE LATERAL LOAD	MAX ALLOWABLE UPLIFT	MAX ALLOWABLE LATERAL LOAD	MAX ALLOWABLE UPLIFT	MAX ALLOWABLE LATERAL LOAD	MAX ALLOWABLE UPLIFT	MAX ALLOWABLE LATERAL LOAD	MAX ALLOWABLE UPLIFT	MAX ALLOWABLE LATERAL LOAD	MAX ALLOWABLE UPLIFT	MAX ALLOWABLE LATERAL LOAD	MAX ALLOWABLE UPLIFT	MAX ALLOWABLE LATERAL LOAD	MAX ALLOWABLE UPLIFT	MAX. BASE MOMENT (M)	MAX. BASE SHEAR (V)	MAX. BASE UPLIFT (T)	MAX. BASE GRAVITY (C)
18 "	24 "	2208 in²	200.0 PSF	157.8 PSF	200.0 PSF	157.8 PSF	200.0 PSF	157.8 PSF	200.0 PSF	157.8 PSF	172.9 PSF	136.5 PSF	172.9 PSF	136.5 PSF	138.3 PSF	109.2 PSF	138.3 PSF	109.2 PSF	247.00 LB-FT	265.2 LB	556.0 LB	374.0 LB
24 "			189.0 PSF	149.2 PSF	189.0 PSF	149.2 PSF	162.0 PSF	127.9 PSF	162.0 PSF	127.9 PSF	135.0 PSF	106.6 PSF	135.0 PSF	106.6 PSF	108.0 PSF	85.2 PSF	108.0 PSF	85.2 PSF	247.00 LB-FT	207.0 LB	487.0 LB	373.3 LB
30 "			155.4 PSF	122.7 PSF	155.4 PSF	122.7 PSF	133.2 PSF	105.2 PSF	133.2 PSF	105.2 PSF	111.0 PSF	87.6 PSF	111.0 PSF	87.6 PSF	88.8 PSF	70.1 PSF	88.8 PSF	70.1 PSF	247.00 LB-FT	170.2 LB	440.8 LB	373.6 LB
36 "			132.1 PSF	104.3 PSF	132.1 PSF	104.3 PSF	113.3 PSF	89.4 PSF	113.3 PSF	89.4 PSF	94.4 PSF	74.5 PSF	94.4 PSF	74.5 PSF	75.5 PSF	59.6 PSF	75.5 PSF	59.6 PSF	247.00 LB-FT	144.7 LB	409.1 LB	374.0 LB
18 "	30 "	3720 in²	143.7 PSF	113.4 PSF	143.7 PSF	113.4 PSF	123.2 PSF	97.2 PSF	123.2 PSF	97.2 PSF	102.6 PSF	81.0 PSF	102.6 PSF	81.0 PSF	82.1 PSF	64.8 PSF	82.1 PSF	64.8 PSF	247.00 LB-FT	265.2 LB	594.3 LB	407.2 LB
24 "			112.2 PSF	88.5 PSF	112.2 PSF	88.5 PSF	96.1 PSF	75.9 PSF	96.1 PSF	75.9 PSF	80.1 PSF	63.2 PSF	80.1 PSF	63.2 PSF	64.1 PSF	50.6 PSF	64.1 PSF	50.6 PSF	247.00 LB-FT	207.0 LB	512.9 LB	399.2 LB
30 "			92.2 PSF	72.8 PSF	92.2 PSF	72.8 PSF	79.0 PSF	62.4 PSF	79.0 PSF	62.4 PSF	65.9 PSF	52.0 PSF	65.9 PSF	52.0 PSF	52.7 PSF	41.6 PSF	52.7 PSF	41.6 PSF	247.00 LB-FT	170.2 LB	462.1 LB	394.9 LB
36 "			78.4 PSF	61.9 PSF	78.4 PSF	61.9 PSF	67.2 PSF	53.0 PSF	67.2 PSF	53.0 PSF	56.0 PSF	44.2 PSF	56.0 PSF	44.2 PSF	44.8 PSF	35.3 PSF	44.8 PSF	35.3 PSF	247.00 LB-FT	144.7 LB	427.2 LB	392.1 LB
18 "	36 "	5040 in²	106.0 PSF	83.7 PSF	106.0 PSF	83.7 PSF	90.9 PSF	71.7 PSF	90.9 PSF	71.7 PSF	75.7 PSF	59.8 PSF	75.7 PSF	59.8 PSF	60.6 PSF	47.8 PSF	60.6 PSF	47.8 PSF	247.00 LB-FT	265.2 LB	627.5 LB	440.3 LB
24 "			82.8 PSF	65.3 PSF	82.8 PSF	65.3 PSF	70.9 PSF	56.0 PSF	70.9 PSF	56.0 PSF	59.1 PSF	46.7 PSF	59.1 PSF	46.7 PSF	47.3 PSF	37.3 PSF	47.3 PSF	37.3 PSF	247.00 LB-FT	207.0 LB	538.8 LB	425.1 LB
30 "			68.1 PSF	53.7 PSF	68.1 PSF	53.7 PSF	58.3 PSF	46.0 PSF	58.3 PSF	46.0 PSF	48.6 PSF	38.4 PSF	48.6 PSF	38.4 PSF	38.9 PSF	30.7 PSF	38.9 PSF	30.7 PSF	247.00 LB-FT	170.2 LB	483.4 LB	416.1 LB
36 "			57.9 PSF	45.7 PSF	57.9 PSF	45.7 PSF	49.6 PSF	39.1 PSF	49.6 PSF	39.1 PSF	41.3 PSF	32.6 PSF	41.3 PSF	32.6 PSF	33.0 PSF	26.1 PSF	33.0 PSF	26.1 PSF	247.00 LB-FT	144.7 LB	445.3 LB	410.2 LB
18 "	42 "	6720 in²	79.5 PSF	62.8 PSF	79.5 PSF	62.8 PSF	68.2 PSF	53.8 PSF	68.2 PSF	53.8 PSF	56.8 PSF	44.8 PSF	56.8 PSF	44.8 PSF	45.4 PSF	35.8 PSF	45.4 PSF	35.8 PSF	247.00 LB-FT	265.2 LB	660.6 LB	473.5 LB
24 "			62.1 PSF	49.0 PSF	62.1 PSF	49.0 PSF	53.2 PSF	42.0 PSF	53.2 PSF	42.0 PSF	44.3 PSF	35.0 PSF	44.3 PSF	35.0 PSF	35.4 PSF	28.0 PSF	35.4 PSF	28.0 PSF	247.00 LB-FT	207.0 LB	564.7 LB	451.0 LB
30 "			51.0 PSF	40.3 PSF	51.0 PSF	40.3 PSF	43.7 PSF	34.5 PSF	43.7 PSF	34.5 PSF	36.4 PSF	28.8 PSF	36.4 PSF	28.8 PSF	29.1 PSF	23.0 PSF	29.1 PSF	23.0 PSF	247.00 LB-FT	170.2 LB	504.7 LB	437.4 LB
36 "			43.4 PSF	34.2 PSF	43.4 PSF	34.2 PSF	37.2 PSF	29.3 PSF	37.2 PSF	29.3 PSF	31.0 PSF	24.4 PSF	31.0 PSF	24.4 PSF	24.8 PSF	19.5 PSF	24.8 PSF	19.5 PSF	247.00 LB-FT	144.7 LB	463.4 LB	428.3 LB
18 "	48 "	9216 in²	58.0 PSF	45.8 PSF	58.0 PSF	45.8 PSF	49.7 PSF	39.2 PSF	49.7 PSF	39.2 PSF	41.4 PSF	32.7 PSF	41.4 PSF	32.7 PSF	33.1 PSF	26.1 PSF	33.1 PSF	26.1 PSF	247.00 LB-FT	265.2 LB	693.8 LB	506.6 LB
24 "			45.2 PSF	35.7 PSF	45.2 PSF	35.7 PSF	38.8 PSF	30.6 PSF	38.8 PSF	30.6 PSF	32.3 PSF	25.5 PSF	32.3 PSF	25.5 PSF	25.8 PSF	20.4 PSF	25.8 PSF	20.4 PSF	247.00 LB-FT	207.0 LB	590.6 LB	476.9 LB
30 "			37.2 PSF	29.4 PSF	37.2 PSF	29.4 PSF	31.9 PSF	25.2 PSF	31.9 PSF	25.2 PSF	26.6 PSF	21.0 PSF	26.6 PSF	21.0 PSF	21.2 PSF	16.8 PSF	21.2 PSF	16.8 PSF	247.00 LB-FT	170.2 LB	525.9 LB	458.7 LB
36 "			31.6 PSF	25.0 PSF	31.6 PSF	25.0 PSF	27.1 PSF	21.4 PSF	27.1 PSF	21.4 PSF	22.6 PSF	17.8 PSF	22.6 PSF	17.8 PSF					247.00 LB-FT	144.7 LB	481.5 LB	419.4 LB

48" STAND DEPTH: MAX FACE AREA (1656in² - 6912in²), FRAME QUANTITY (3-6 FRAMES)

STAND CLEAR HEIGHT	MAX MEAN UNIT HEIGHT	MAX FACE AREA	UNIT TO FRAME RATIO																LOAD TRANSFER INFORMATION FOR USE WITH HOST STRUCTURE VERIFICATION ONLY			
			MAX FACE AREA : 6 FRAMES				MAX FACE AREA : 5 FRAMES				MAX FACE AREA : 4 FRAMES				MAX FACE AREA : 3 FRAMES							
			ANCHOR TYPE: 1 OR 4		ANCHORS TYPE: 2 OR 3		ANCHOR TYPE: 1 OR 4		ANCHORS TYPE: 2 OR 3		ANCHOR TYPE: 1 OR 4		ANCHORS TYPE: 2 OR 3		ANCHOR TYPE: 1 OR 4		ANCHORS TYPE: 2 OR 3					
			MAX ALLOWABLE LATERAL LOAD	MAX ALLOWABLE UPLIFT	MAX ALLOWABLE LATERAL LOAD	MAX ALLOWABLE UPLIFT	MAX ALLOWABLE LATERAL LOAD	MAX ALLOWABLE UPLIFT	MAX ALLOWABLE LATERAL LOAD	MAX ALLOWABLE UPLIFT	MAX ALLOWABLE LATERAL LOAD	MAX ALLOWABLE UPLIFT	MAX ALLOWABLE LATERAL LOAD	MAX ALLOWABLE UPLIFT	MAX ALLOWABLE LATERAL LOAD	MAX ALLOWABLE UPLIFT	MAX ALLOWABLE LATERAL LOAD	MAX ALLOWABLE UPLIFT	MAX. BASE MOMENT (M)	MAX. BASE SHEAR (V)	MAX. BASE UPLIFT (T)	MAX. BASE GRAVITY (C)
18 "	24 "	1656 in²	200.0 PSF	157.8 PSF	200.0 PSF	157.8 PSF	200.0 PSF	157.8 PSF	200.0 PSF	157.8 PSF	184.5 PSF	145.6 PSF	184.5 PSF	145.6 PSF	138.3 PSF	109.2 PSF	138.3 PSF	109.2 PSF	247.00 LB-FT	265.2 LB	557.2 LB	374.0 LB
24 "			200.0 PSF	157.8 PSF	200.0 PSF	157.8 PSF	180.0 PSF	142.1 PSF	180.0 PSF	142.1 PSF	144.0 PSF	113.7 PSF	144.0 PSF	113.7 PSF	108.0 PSF	85.2 PSF	108.0 PSF	85.2 PSF	247.00 LB-FT	207.0 LB	486.4 LB	373.3 LB
30 "			177.6 PSF	140.2 PSF	177.6 PSF	140.2 PSF	148.0 PSF	116.8 PSF	148.0 PSF	116.8 PSF	118.4 PSF	93.5 PSF	118.4 PSF	93.5 PSF	88.8 PSF	70.1 PSF	88.8 PSF	70.1 PSF	247.00 LB-FT	170.2 LB	442.4 LB	373.6 LB
36 "			151.0 PSF	119.2 PSF	151.0 PSF	119.2 PSF	125.8 PSF	99.3 PSF	125.8 PSF	99.3 PSF	100.7 PSF	79.5 PSF	100.7 PSF	79.5 PSF	75.5 PSF	59.6 PSF	75.5 PSF	59.6 PSF	247.00 LB-FT	144.7 LB	410.7 LB	374.0 LB
18 "	30 "	2790 in²	164.2 PSF	129.6 PSF	164.2 PSF	129.6 PSF	136.8 PSF	108.0 PSF	136.8 PSF	108.0 PSF	109.5 PSF	86.4 PSF	109.5 PSF	86.4 PSF	82.1 PSF	64.8 PSF	82.1 PSF	64.8 PSF	247.00 LB-FT	265.2 LB	595.9 LB	407.2 LB
24 "			128.2 PSF	101.2 PSF	128.2 PSF	101.2 PSF	106.8 PSF	84.3 PSF	106.8 PSF	84.3 PSF	85.4 PSF	67.4 PSF	85.4 PSF	67.4 PSF	64.1 PSF	50.6 PSF	64.1 PSF	50.6 PSF	247.00 LB-FT	207.0 LB	514.5 LB	399.2 LB
30 "			105.4 PSF	83.2 PSF	105.4 PSF	83.2 PSF	87.8 PSF	69.3 PSF	87.8 PSF	69.3 PSF	70.3 PSF	55.5 PSF	70.3 PSF	55.5 PSF	52.7 PSF	41.6 PSF	52.7 PSF	41.6 PSF	247.00 LB-FT	170.2 LB	463.7 LB	394.9 LB
36 "			89.6 PSF	70.7 PSF	89.6 PSF	70.7 PSF	74.7 PSF	58.9 PSF	74.7 PSF	58.9 PSF	59.7 PSF	47.1 PSF	59.7 PSF	47.1 PSF	44.8 PSF	35.3 PSF	44.8 PSF	35.3 PSF	247.00 LB-FT	144.7 LB	428.8 LB	392.1 LB
18 "	36 "	3780 in²	121.2 PSF	95.7 PSF	121.2 PSF	95.7 PSF	101.0 PSF	79.7 PSF	101.0 PSF	79.7 PSF	80.8 PSF	63.8 PSF	80.8 PSF	63.8 PSF	60.6 PSF	47.8 PSF	60.6 PSF	47.8 PSF	247.00 LB-FT	265.2 LB	629.1 LB	440.3 LB
24 "			94.6 PSF	74.7 PSF	94.6 PSF	74.7 PSF	78.8 PSF	62.2 PSF	78.8 PSF	62.2 PSF	63.1 PSF	49.8 PSF	63.1 PSF	49.8 PSF	47.3 PSF	37.3 PSF	47.3 PSF	37.3 PSF	247.00 LB-FT	207.0 LB	540.4 LB	425.1 LB
30 "			77.8 PSF	61.4 PSF	77.8 PSF	61.4 PSF	64.8 PSF	51.2 PSF	64.8 PSF	51.2 PSF	51.8 PSF	40.9 PSF	51.8 PSF	40.9 PSF	38.9 PSF	30.7 PSF	38.9 PSF	30.7 PSF	247.00 LB-FT	170.2 LB	485.0 LB	416.1 LB
36 "			66.1 PSF	52.2 PSF	66.1 PSF	52.2 PSF	55.1 PSF	43.5 PSF	55.1 PSF	43.5 PSF	44.1 PSF	34.8 PSF	44.1 PSF	34.8 PSF	33.0 PSF	26.1 PSF	33.0 PSF	26.1 PSF	247.00 LB-FT	144.7 LB	446.9 LB	410.2 LB
18 "	42 "	5040 in²	90.9 PSF	71.7 PSF	90.9 PSF	71.7 PSF	75.7 PSF	59.8 PSF	75.7 PSF	59.8 PSF	60.6 PSF	47.8 PSF	60.6 PSF	47.8 PSF	45.4 PSF	35.8 PSF	45.4 PSF	35.8 PSF	247.00 LB-FT	265.2 LB	662.2 LB	473.5 LB
24 "			70.9 PSF	56.0 PSF	70.9 PSF	56.0 PSF	59.1 PSF	46.7 PSF	59.1 PSF	46.7 PSF	47.3 PSF	37.3 PSF	47.3 PSF	37.3 PSF	35.4 PSF	28.0 PSF	35.4 PSF	28.0 PSF	247.00 LB-FT	207.0 LB	566.3 LB	451.0 LB
30 "			58.3 PSF	46.0 PSF	58.3 PSF	46.0 PSF	48.6 PSF	38.4 PSF	48.6 PSF	38.4 PSF	38.9 PSF	30.7 PSF	38.9 PSF	30.7 PSF	29.1 PSF	23.0 PSF	29.1 PSF	23.0 PSF	247.00 LB-FT	170.2 LB	506.3 LB	437.4 LB
36 "			49.6 PSF	39.1 PSF	49.6 PSF	39.1 PSF	41.3 PSF	32.6 PSF	41.3 PSF	32.6 PSF	33.0 PSF	26.1 PSF	33.0 PSF	26.1 PSF	24.8 PSF	19.5 PSF	24.8 PSF	19.5 PSF	247.00 LB-FT	144.7 LB	465.0 LB	428.3 LB
18 "	48 "	6912 in²	66.3 PSF	52.3 PSF	66.3 PSF	52.3 PSF	55.2 PSF	43.6 PSF	55.2 PSF	43.6 PSF	44.2 PSF	34.8 PSF	44.2 PSF	34.8 PSF	33.1 PSF	26.1 PSF	33.1 PSF	26.1 PSF	247.00 LB-FT	265.2 LB	695.4 LB	506.6 LB
24 "			51.7 PSF	40.8 PSF	51.7 PSF	40.8 PSF	43.1 PSF	34.0 PSF	43.1 PSF	34.0 PSF	34.5 PSF	27.2 PSF	34.5 PSF	27.2 PSF	25.8 PSF	20.4 PSF	25.8 PSF	20.4 PSF	247.00 LB-FT	207.0 LB	592.2 LB	476.9 LB
30 "			42.5 PSF	33.6 PSF	42.5 PSF	33.6 PSF	35.4 PSF	28.0 PSF	35.4 PSF	28.0 PSF	28.3 PSF	22.4 PSF	28.3 PSF	22.4 PSF	21.2 PSF	16.8 PSF	21.2 PSF	16.8 PSF	247.00 LB-FT	170.2 LB	527.5 LB	458.7 LB
36 "			36.1 PSF	28.5 PSF	36.1 PSF	28.5 PSF	30.1 PSF	23.8 PSF	30.1 PSF	23.8 PSF	24.1 PSF	19.0 PSF	24.1 PSF	19.0 PSF					247.00 LB-FT	144.7 LB	483.1 LB	412.7 LB

48" STAND DEPTH: MAX FACE AREA (1104in² - 4608in²), FRAME QUANTITY (2-5 FRAMES)

STAND CLEAR HEIGHT	MAX MEAN UNIT HEIGHT	MAX FACE AREA	UNIT TO FRAME RATIO																LOAD TRANSFER INFORMATION FOR USE WITH HOST STRUCTURE VERIFICATION ONLY			
			MAX FACE AREA : 5 FRAMES				MAX FACE AREA : 4 FRAMES				MAX FACE AREA : 3 FRAMES				MAX FACE AREA : 2 FRAMES							
			ANCHOR TYPE: 1 OR 4		ANCHORS TYPE: 2 OR 3		ANCHOR TYPE: 1 OR 4		ANCHORS TYPE: 2 OR 3		ANCHOR TYPE: 1 OR 4		ANCHORS TYPE: 2 OR 3		ANCHOR TYPE: 1 OR 4		ANCHORS TYPE: 2 OR 3					
			MAX ALLOWABLE LATERAL LOAD	MAX ALLOWABLE UPLIFT	MAX ALLOWABLE LATERAL LOAD	MAX ALLOWABLE UPLIFT	MAX ALLOWABLE LATERAL LOAD	MAX ALLOWABLE UPLIFT	MAX ALLOWABLE LATERAL LOAD	MAX ALLOWABLE UPLIFT	MAX ALLOWABLE LATERAL LOAD	MAX ALLOWABLE UPLIFT	MAX ALLOWABLE LATERAL LOAD	MAX ALLOWABLE UPLIFT	MAX ALLOWABLE LATERAL LOAD	MAX ALLOWABLE UPLIFT	MAX ALLOWABLE LATERAL LOAD	MAX ALLOWABLE UPLIFT	MAX. BASE MOMENT (M)	MAX. BASE SHEAR (V)	MAX. BASE UPLIFT (T)	MAX. BASE GRAVITY (C)
18 "	24 "	1104 in²	200.0 PSF	157.8 PSF	200.0 PSF	157.8 PSF	200.0 PSF	157.8 PSF	200.0 PSF	157.8 PSF	200.0 PSF	157.8 PSF	200.0 PSF	157.8 PSF	138.3 PSF	109.2 PSF	138.3 PSF	109.2 PSF	247.00 LB-FT	265.2 LB	551.5 LB	374.0 LB
24 "			200.0 PSF	157.8 PSF	200.0 PSF	157.8 PSF	200.0 PSF	157.8 PSF	200.0 PSF	157.8 PSF	162.0 PSF	127.9 PSF	162.0 PSF	127.9 PSF	108.0 PSF	85.2 PSF	108.0 PSF	85.2 PSF	247.00 LB-FT	207.0 LB	484.9 LB	373.3 LB
30 "			200.0 PSF	157.8 PSF	200.0 PSF	157.8 PSF	177.6 PSF	140.2 PSF	177.6 PSF	140.2 PSF	133.2 PSF	105.2 PSF	133.2 PSF	105.2 PSF	88.8 PSF	70.1 PSF	88.8 PSF	70.1 PSF	247.00 LB-FT	170.2 LB	442.4 LB	373.6 LB
36 "			188.8 PSF	149.0 PSF	188.8 PSF	149.0 PSF	151.0 PSF	119.2 PSF	151.0 PSF	119.2 PSF	113.3 PSF	89.4 PSF	113.3 PSF	89.4 PSF	75.5 PSF	59.6 PSF	75.5 PSF	59.6 PSF	247.00 LB-FT	144.7 LB	412.9 LB	374.0 LB
18 "	30 "	1860 in²	200.0 PSF	157.8 PSF	200.0 PSF	157.8 PSF	164.2 PSF	129.6 PSF	164.2 PSF	129.6 PSF	123.2 PSF	97.2 PSF	123.2 PSF	97.2 PSF	82.1 PSF	64.8 PSF	82.1 PSF	64.8 PSF	247.00 LB-FT	265.2 LB	595.9 LB	407.2 LB
24 "			160.3 PSF	126.5 PSF	160.3 PSF	126.5 PSF	128.2 PSF	101.2 PSF	128.2 PSF	101.2 PSF	96.1 PSF	75.9 PSF	96.1 PSF	75.9 PSF	64.1 PSF	50.6 PSF	64.1 PSF	50.6 PSF	247.00 LB-FT	207.0 LB	516.8 LB	399.2 LB
30 "			131.8 PSF	104.0 PSF	131.8 PSF	104.0 PSF	105.4 PSF	83.2 PSF	105.4 PSF	83.2 PSF	79.0 PSF	62.4 PSF	79.0 PSF	62.4 PSF	52.7 PSF	41.6 PSF	52.7 PSF	41.6 PSF	247.00 LB-FT	170.2 LB	465.9 LB	394.9 LB
36 "			112.0 PSF	88.4 PSF	112.0 PSF	88.4 PSF	89.6 PSF	70.7 PSF	89.6 PSF	70.7 PSF	67.2 PSF	53.0 PSF	67.2 PSF	53.0 PSF	44.8 PSF	35.3 PSF	44.8 PSF	35.3 PSF	247.00 LB-FT	144.7 LB	431.0 LB	392.1 LB
18 "	36 "	2520 in²	151.5 PSF	119.6 PSF	151.5 PSF	119.6 PSF	121.2 PSF	95.7 PSF	121.2 PSF	95.7 PSF	90.9 PSF	71.7 PSF	90.9 PSF	71.7 PSF	60.6 PSF	47.8 PSF	60.6 PSF	47.8 PSF	247.00 LB-FT	265.2 LB	631.3 LB	440.3 LB
24 "			118.3 PSF	93.4 PSF	118.3 PSF	93.4 PSF	94.6 PSF	74.7 PSF	94.6 PSF	74.7 PSF	70.9 PSF	56.0 PSF	70.9 PSF	56.0 PSF	47.3 PSF	37.3 PSF	47.3 PSF	37.3 PSF	247.00 LB-FT	207.0 LB	542.7 LB	425.1 LB
30 "			97.3 PSF	76.8 PSF	97.3 PSF	76.8 PSF	77.8 PSF	61.4 PSF	77.8 PSF	61.4 PSF	58.3 PSF	46.0 PSF	58.3 PSF	46.0 PSF	38.9 PSF	30.7 PSF	38.9 PSF	30.7 PSF	247.00 LB-FT	170.2 LB	487.2 LB	416.1 LB
36 "			82.7 PSF	65.3 PSF	82.7 PSF	65.3 PSF	66.1 PSF	52.2 PSF	66.1 PSF	52.2 PSF	49.6 PSF	39.1 PSF	49.6 PSF	39.1 PSF	33.0 PSF	26.1 PSF	33.0 PSF	26.1 PSF	247.00 LB-FT	144.7 LB	449.1 LB	410.2 LB
18 "	42 "	3360 in²	113.6 PSF	89.7 PSF	113.6 PSF	89.7 PSF	90.9 PSF	71.7 PSF	90.9 PSF	71.7 PSF	68.2 PSF	53.8 PSF	68.2 PSF	53.8 PSF	45.4 PSF	35.8 PSF	45.4 PSF	35.8 PSF	247.00 LB-FT	265.2 LB	664.5 LB	473.5 LB
24 "			88.7 PSF	70.0 PSF	88.7 PSF	70.0 PSF	70.9 PSF	56.0 PSF	70.9 PSF	56.0 PSF	53.2 PSF	42.0 PSF	53.2 PSF	42.0 PSF	35.4 PSF	28.0 PSF	35.4 PSF	28.0 PSF	247.00 LB-FT	207.0 LB	568.5 LB	451.0 LB
30 "			72.9 PSF	57.6 PSF	72.9 PSF	57.6 PSF	58.3 PSF	46.0 PSF	58.3 PSF	46.0 PSF	43.7 PSF	34.5 PSF	43.7 PSF	34.5 PSF	29.1 PSF	23.0 PSF	29.1 PSF	23.0 PSF	247.00 LB-FT	170.2 LB	508.5 LB	437.4 LB
36 "			62.0 PSF	48.9 PSF	62.0 PSF	48.9 PSF	49.6 PSF	39.1 PSF	49.6 PSF	39.1 PSF	37.2 PSF	29.3 PSF	37.2 PSF	29.3 PSF	24.8 PSF	19.5 PSF	24.8 PSF	19.5 PSF	247.00 LB-FT	144.7 LB	467.2 LB	428.3 LB
18 "	48 "	4608 in²	82.8 PSF	65.4 PSF	82.8 PSF	65.4 PSF	66.3 PSF	52.3 PSF	66.3 PSF	52.3 PSF	49.7 PSF	39.2 PSF	49.7 PSF	39.2 PSF	33.1 PSF	26.1 PSF	33.1 PSF	26.1 PSF	247.00 LB-FT	265.2 LB	697.6 LB	506.6 LB
24 "			64.7 PSF	51.0 PSF	64.7 PSF	51.0 PSF	51.7 PSF	40.8 PSF	51.7 PSF	40.8 PSF	38.8 PSF	30.6 PSF	38.8 PSF	30.6 PSF	25.8 PSF	20.4 PSF	25.8 PSF	20.4 PSF	247.00 LB-FT	207.0 LB	594.4 LB	476.9 LB
30 "			53.2 PSF	42.0 PSF	53.2 PSF	42.0 PSF	42.5 PSF	33.6 PSF	42.5 PSF	33.6 PSF	31.9 PSF	25.2 PSF	31.9 PSF	25.2 PSF	21.2 PSF	16.8 PSF	21.2 PSF	16.8 PSF	247.00 LB-FT	170.2 LB	529.8 LB	458.7 LB
36 "			45.2 PSF	35.7 PSF	45.2 PSF	35.7 PSF	36.1 PSF	28.5 PSF	36.1 PSF	28.5 PSF	27.1 PSF	21.4 PSF	27.1 PSF	21.4 PSF					247.00 LB-FT	144.7 LB	485.3 LB	401.4 LB

FL 16921.1

ENGINEERING EXPRESS®
POSTAL ADDRESS:
2234 NORTH FEDERAL HWY #7664
BOCA RATON, FL 33431
ENGINEERINGEXPRESS.COM

PRECISION ALUMINUM PRODUCTS, INC.
1339 SW 1ST WAY
DEERFIELD BEACH, FL 33441
(954) 480-6919

ALUMINUM A/C STANDS
FLORIDA BUILDING CODE EIGHTH EDITION (2023)
FLORIDA STATEWIDE APPROVAL (FSA FL# 16921.1)

REMARKS	DRWN	CHKD	DATE
PREV. SUBMITTAL (20-32768)	CSL	RWN	12/15/20
2023 FBC UPDATE & TECH. CHANGES	MRT	RWN	12/08/23

COPYRIGHT ENGINEERING EXPRESS®

23-69401

SCALE: NTS UNLESS NOTED

12/21/2023 1:55 PM MILTON c:\users\milton\engineering express\production - documents\projects\23-\23-69401 2023 product fbc update fl16921\work\2023 fbc\drawings & cad\23-69401c - fl16921.1 - cad.dwg

"FIXED HD" STAND DESIGN SCHEDULE CONTINUED

48" STAND DEPTH: MAX FACE AREA (552in² - 2304in²), FRAME QUANTITY (2-3 FRAMES)

STAND CLEAR HEIGHT	MAX MEAN UNIT HEIGHT	MAX FACE AREA	UNIT TO FRAME RATIO — MAX FACE AREA : 3 FRAMES — ANCHOR TYPE: 1 OR 4 — MAX ALLOWABLE LATERAL LOAD	MAX ALLOWABLE UPLIFT	ANCHOR TYPE: 2 OR 3 — MAX ALLOWABLE LATERAL LOAD	MAX ALLOWABLE UPLIFT	MAX FACE AREA : 2 FRAMES — ANCHOR TYPE: 1 OR 4 — MAX ALLOWABLE LATERAL LOAD	MAX ALLOWABLE UPLIFT	ANCHOR TYPE: 2 OR 3 — MAX ALLOWABLE LATERAL LOAD	MAX ALLOWABLE UPLIFT	LOAD TRANSFER INFORMATION FOR USE WITH HOST STRUCTURE VERIFICATION ONLY — MAX. BASE MOMENT (M)	MAX. BASE SHEAR (V)	MAX. BASE UPLIFT (T)	MAX. BASE GRAVITY (C)
18 "	24 "	552 in²	200.0 PSF	157.8 PSF	200.0 PSF	157.8 PSF	200.0 PSF	157.8 PSF	200.0 PSF	157.8 PSF	178.50 LB-FT	191.6 LB	403.6 LB	240.2 LB
24 "			200.0 PSF	157.8 PSF	200.0 PSF	157.8 PSF	200.0 PSF	157.8 PSF	200.0 PSF	157.8 PSF	228.70 LB-FT	191.6 LB	451.5 LB	288.1 LB
30 "			200.0 PSF	157.8 PSF	200.0 PSF	157.8 PSF	177.6 PSF	140.2 PSF	177.6 PSF	140.2 PSF	247.00 LB-FT	170.2 LB	442.4 LB	306.1 LB
18 "	30 "	690 in²	200.0 PSF	157.8 PSF	200.0 PSF	157.8 PSF	200.0 PSF	157.8 PSF	200.0 PSF	157.8 PSF	223.20 LB-FT	239.5 LB	537.2 LB	313.3 LB
24 "			192.3 PSF	151.8 PSF	192.3 PSF	151.8 PSF	128.2 PSF	101.2 PSF	128.2 PSF	101.2 PSF	247.00 LB-FT	207.0 LB	518.3 LB	331.7 LB
30 "			158.1 PSF	124.8 PSF	158.1 PSF	124.8 PSF	105.4 PSF	83.2 PSF	105.4 PSF	83.2 PSF	247.00 LB-FT	170.2 LB	467.4 LB	327.4 LB
36 "			134.5 PSF	106.1 PSF	134.5 PSF	106.1 PSF	89.6 PSF	70.7 PSF	89.6 PSF	70.7 PSF	247.00 LB-FT	144.7 LB	432.5 LB	324.6 LB
18 "	36 "	1116 in²	200.0 PSF	157.8 PSF	200.0 PSF	157.8 PSF	136.8 PSF	108.0 PSF	136.8 PSF	108.0 PSF	247.00 LB-FT	265.2 LB	629.1 LB	372.8 LB
24 "			141.9 PSF	112.0 PSF	141.9 PSF	112.0 PSF	94.6 PSF	74.7 PSF	94.6 PSF	74.7 PSF	247.00 LB-FT	207.0 LB	544.2 LB	357.6 LB
30 "			116.7 PSF	92.1 PSF	116.7 PSF	92.1 PSF	77.8 PSF	61.4 PSF	77.8 PSF	61.4 PSF	247.00 LB-FT	170.2 LB	488.7 LB	348.6 LB
36 "			99.2 PSF	78.3 PSF	99.2 PSF	78.3 PSF	66.1 PSF	52.2 PSF	66.1 PSF	52.2 PSF	247.00 LB-FT	144.7 LB	450.6 LB	342.7 LB
18 "	42 "	1470 in²	155.8 PSF	123.0 PSF	155.8 PSF	123.0 PSF	103.9 PSF	82.0 PSF	103.9 PSF	82.0 PSF	247.00 LB-FT	265.2 LB	666.0 LB	406.0 LB
24 "			106.4 PSF	84.0 PSF	106.4 PSF	84.0 PSF	70.9 PSF	56.0 PSF	70.9 PSF	56.0 PSF	247.00 LB-FT	207.0 LB	570.0 LB	383.5 LB
30 "			87.5 PSF	69.1 PSF	87.5 PSF	69.1 PSF	58.3 PSF	46.0 PSF	58.3 PSF	46.0 PSF	247.00 LB-FT	170.2 LB	510.0 LB	369.9 LB
36 "			74.4 PSF	58.7 PSF	74.4 PSF	58.7 PSF	49.6 PSF	39.1 PSF	49.6 PSF	39.1 PSF	247.00 LB-FT	144.7 LB	468.7 LB	360.8 LB
18 "	48 "	1920 in²	119.3 PSF	94.2 PSF	119.3 PSF	94.2 PSF	79.5 PSF	62.8 PSF	79.5 PSF	62.8 PSF	247.00 LB-FT	265.2 LB	699.1 LB	439.1 LB
24 "			77.6 PSF	61.3 PSF	77.6 PSF	61.3 PSF	51.7 PSF	40.8 PSF	51.7 PSF	40.8 PSF	247.00 LB-FT	207.0 LB	595.9 LB	409.4 LB
30 "			63.8 PSF	50.4 PSF	63.8 PSF	50.4 PSF	42.5 PSF	33.6 PSF	42.5 PSF	33.6 PSF	247.00 LB-FT	170.2 LB	531.3 LB	391.2 LB
36 "			54.2 PSF	42.8 PSF	54.2 PSF	42.8 PSF	36.1 PSF	28.5 PSF	36.1 PSF	28.5 PSF	247.00 LB-FT	144.7 LB	486.8 LB	378.9 LB

DESIGN SCHEDULES NOTES:

1. DESIGN SCHEDULES SHOWN HEREIN ARE REFERENCED TO ALLOWABLE STRENGTH DESIGN (ASD) METHODOLOGY.

2. EMPTY CELLS DENOTES CONDITIONS NOT ALLOWED TO USE.

3. MAXIMUM CALCULATED FACE AREA SHALL BE EQUAL TO OR LESS THAN THE MAXIMUM ALLOWABLE FACE AREA FOR EACH CONFIGURATION.

4. REFERENCE ANCHOR SCHEDULE FOR ANCHOR TYPES LISTED HEREIN.

"HD CUSTOM CROSS-BRACE" STAND DESIGN SCHEDULE

24" STAND DEPTH:

MAX UNIT DIMENSIONS (W x D x H)	STAND CLEAR HEIGHT	UNIT TO FRAME RATIO — (1) UNIT: (3) FRAMES — ANCHOR TYPE: 1 OR 4 — MAX ALLOWABLE LATERAL LOAD	MAX ALLOWABLE UPLIFT	ANCHORS TYPE: 2 OR 3 — MAX ALLOWABLE LATERAL LOAD	MAX ALLOWABLE UPLIFT	(2) UNITS: (5) FRAMES — ANCHOR TYPE: 1 OR 4 — MAX ALLOWABLE LATERAL LOAD	MAX ALLOWABLE UPLIFT	ANCHORS TYPE: 2 OR 3 — MAX ALLOWABLE LATERAL LOAD	MAX ALLOWABLE UPLIFT	(3) UNITS: (6) FRAMES — ANCHOR TYPE: 1 OR 4 — MAX ALLOWABLE LATERAL LOAD	MAX ALLOWABLE UPLIFT	ANCHORS TYPE: 2 OR 3 — MAX ALLOWABLE LATERAL LOAD	MAX ALLOWABLE UPLIFT	LOAD TRANSFER INFORMATION FOR USE WITH HOST STRUCTURE VERIFICATION ONLY — MAX. BASE MOMENT (M)	MAX. BASE SHEAR (V)	MAX. BASE UPLIFT (T)	MAX. BASE GRAVITY (C)
52" WIDTH 49" DEPTH 72" HEIGHT	18 "	71.7 PSF	56.6 PSF	57.6 PSF	45.5 PSF	59.7 PSF	47.2 PSF	48.0 PSF	37.0 PSF	47.8 PSF	37.7 PSF	38.4 PSF	30.3 PSF	181.00 LB-FT	310.70 LB	1642.3 LB	1606.9 LB
	24 "	60.9 PSF	48.1 PSF	49.5 PSF	39.1 PSF	50.8 PSF	40.1 PSF	41.2 PSF	32.6 PSF	40.6 PSF	32.1 PSF	33.0 PSF	26.1 PSF	196.50 LB-FT	264.3 LB	1526.8 LB	1534.7 LB
	30 "	63.5 PSF	50.1 PSF	52.2 PSF	41.2 PSF	52.9 PSF	41.8 PSF	43.5 PSF	34.3 PSF	42.3 PSF	33.4 PSF	34.8 PSF	27.5 PSF	247.00 LB-FT	275.3 LB	1733.2 LB	1726.3 LB
	36 "	54.3 PSF	42.9 PSF	47.0 PSF	37.1 PSF	45.3 PSF	35.7 PSF	39.2 PSF	30.9 PSF	36.2 PSF	28.6 PSF	31.4 PSF	24.8 PSF	247.00 LB-FT	235.6 LB	1599.7 LB	1570.0 LB

36" STAND DEPTH:

MAX UNIT DIMENSIONS (W x D x H)	STAND CLEAR HEIGHT	UNIT TO FRAME RATIO — (1) UNIT: (3) FRAMES — ANCHOR TYPE: 1 OR 4 — MAX ALLOWABLE LATERAL LOAD	MAX ALLOWABLE UPLIFT	ANCHORS TYPE: 2 OR 3 — MAX ALLOWABLE LATERAL LOAD	MAX ALLOWABLE UPLIFT	(2) UNITS: (5) FRAMES — ANCHOR TYPE: 1 OR 4 — MAX ALLOWABLE LATERAL LOAD	MAX ALLOWABLE UPLIFT	ANCHORS TYPE: 2 OR 3 — MAX ALLOWABLE LATERAL LOAD	MAX ALLOWABLE UPLIFT	(3) UNITS: (6) FRAMES — ANCHOR TYPE: 1 OR 4 — MAX ALLOWABLE LATERAL LOAD	MAX ALLOWABLE UPLIFT	ANCHORS TYPE: 2 OR 3 — MAX ALLOWABLE LATERAL LOAD	MAX ALLOWABLE UPLIFT	LOAD TRANSFER INFORMATION FOR USE WITH HOST STRUCTURE VERIFICATION ONLY — MAX. BASE MOMENT (M)	MAX. BASE SHEAR (V)	MAX. BASE UPLIFT (T)	MAX. BASE GRAVITY (C)
52" WIDTH 49" DEPTH 72" HEIGHT	18 "	78.9 PSF	62.3 PSF	63.0 PSF	49.7 PSF	65.8 PSF	51.9 PSF	52.5 PSF	41.5 PSF	52.6 PSF	41.5 PSF	42.0 PSF	33.2 PSF	215.30 LB-FT	343.4 LB	1257.0 LB	1216.7 LB
	24 "	66.3 PSF	52.4 PSF	53.6 PSF	42.3 PSF	55.3 PSF	43.6 PSF	44.7 PSF	35.3 PSF	44.2 PSF	34.9 PSF	35.8 PSF	28.2 PSF	229.80 LB-FT	288.7 LB	1151.2 LB	1157.6 LB
	30 "	59.5 PSF	47.0 PSF	58.0 PSF	45.8 PSF	49.6 PSF	39.1 PSF	48.3 PSF	38.2 PSF	39.6 PSF	31.3 PSF	38.7 PSF	30.5 PSF	247.00 LB-FT	257.9 LB	1116.3 LB	1085.7 LB
	36 "	51.1 PSF	40.3 PSF	51.1 PSF	40.3 PSF	42.6 PSF	33.6 PSF	41.6 PSF	33.6 PSF	34.0 PSF	26.9 PSF	34.0 PSF	26.9 PSF	247.00 LB-FT	221.5 LB	1030.9 LB	1031.6 LB

24"-36" STAND DEPTH (SPECIAL MINI-SPLIT OPTION):

UNIT DIMENSIONS (W x D x H)	STAND CLEAR HEIGHT	UNIT TO FRAME RATIO — (1) UNIT: (3) FRAMES — ANCHOR TYPE: 1 OR 4 — MAX ALLOWABLE LATERAL LOAD	MAX ALLOWABLE UPLIFT	ANCHORS TYPE: 2 OR 3 — MAX ALLOWABLE LATERAL LOAD	MAX ALLOWABLE UPLIFT	(2) UNITS: (4) FRAMES — ANCHOR TYPE: 1 OR 4 — MAX ALLOWABLE LATERAL LOAD	MAX ALLOWABLE UPLIFT	ANCHORS TYPE: 2 OR 3 — MAX ALLOWABLE LATERAL LOAD	MAX ALLOWABLE UPLIFT	(3) UNITS: (5) FRAMES — ANCHOR TYPE: 1 OR 4 — MAX ALLOWABLE LATERAL LOAD	MAX ALLOWABLE UPLIFT	ANCHORS TYPE: 2 OR 3 — MAX ALLOWABLE LATERAL LOAD	MAX ALLOWABLE UPLIFT	LOAD TRANSFER INFORMATION FOR USE WITH HOST STRUCTURE VERIFICATION ONLY — MAX. BASE MOMENT (M)	MAX. BASE SHEAR (V)	MAX. BASE UPLIFT (T)	MAX. BASE GRAVITY (C)
30" MAX. WIDTH 12" MIN. DEPTH 55" MAX. HEIGHT	18 "	82.5 PSF	65.1 PSF	82.5 PSF	65.1 PSF	82.5 PSF	65.1 PSF	82.5 PSF	65.1 PSF	82.5 PSF	65.1 PSF	79.2 PSF	62.5 PSF	199.70 LB-FT	341.5 LB	1420.2 LB	1585.0 LB
	24 "	82.5 PSF	65.1 PSF	82.5 PSF	65.1 PSF	82.5 PSF	65.1 PSF	80.5 PSF	63.6 PSF	82.5 PSF	65.1 PSF	67.2 PSF	53.0 PSF	212.80 LB-FT	286.2 LB	1330.4 LB	1510.4 LB
	30 "	82.5 PSF	65.1 PSF	82.5 PSF	65.1 PSF	82.5 PSF	65.1 PSF	82.5 PSF	65.1 PSF	80.0 PSF	63.2 PSF	71.1 PSF	56.1 PSF	247.00 LB-FT	275.3 LB	1422.0 LB	1599.6 LB
	36 "	82.5 PSF	65.1 PSF	82.5 PSF	65.1 PSF	82.2 PSF	64.9 PSF	76.3 PSF	60.2 PSF	68.5 PSF	54.1 PSF	63.6 PSF	50.2 PSF	247.00 LB-FT	235.6 LB	1335.3 LB	1521.6 LB

24"-36" STAND DEPTH (SPECIAL MINI-SPLIT OPTION) SCHEDULE NOTE: SEE DETAIL 1/16 FOR MINI-SPLIT UNIT TO STAND ATTACHMENT

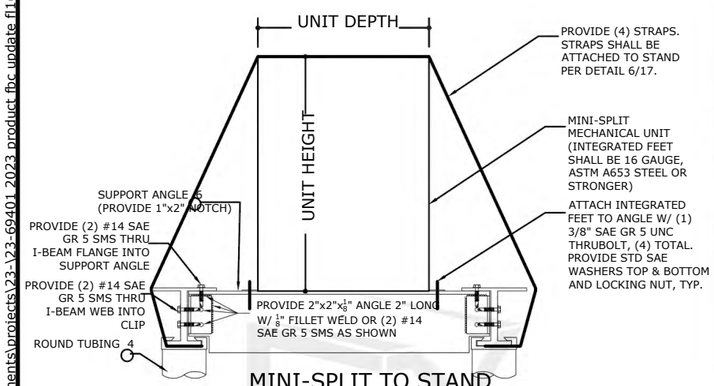

MINI-SPLIT TO STAND ATTACHMENT DETAIL

DETAIL 1/16 NOTES:
1. THE INSTALLER SHALL ENSURE INTEGRATED FEET OF MINI-SPLIT UNIT IS 16 GAUGE THICK MIN, ASTM 653 STEEL OR STRONGER.
2. INTEGRATED FEET HOLES SHALL ENSURE 3/4" MINIMUM EDGE DISTANCE TO ANY INTEGRATED FEET EDGE FOR EACH 3/8" Ø ANCHOR.
3. IF THE INSTALLER IS UNABLE TO VERIFY THESE REQUIREMENTS, THE BUILDING OFFICIAL SHALL REQUIRE A SITE-SPECIFIC EVALUATION TO ENSURE TIEDOWN STABILITY.

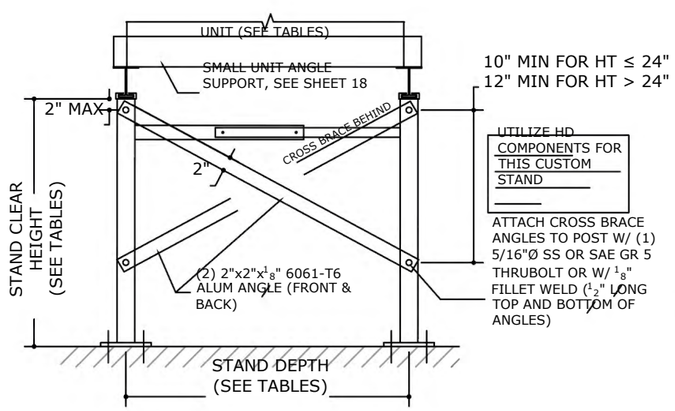

HD CUSTOM CROSS-BRACE ASSEMBLY ALLOWABLE CONFIGURATIONS:

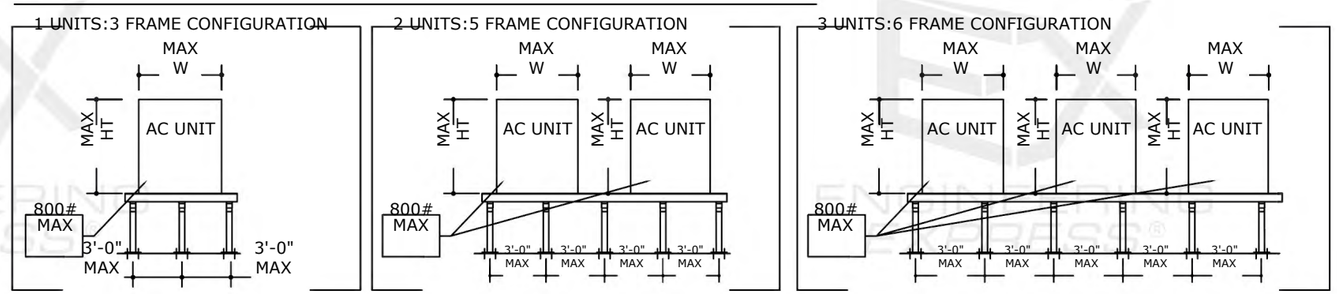

FRANK BENNARDO, P.E.
PE# 0046549 CA# 9885

FRANK L. BENNARDO LICENSE No PE0046549 STATE OF FLORIDA PROFESSIONAL ENGINEER

12/28/2023

DECEMBER 21, 2023

FL

FL 16921.1

ENGINEERING EXPRESS®
POSTAL ADDRESS:
2234 NORTH FEDERAL HWY #7664
BOCA RATON, FL 33431
ENGINEERINGEXPRESS.COM

PRECISION ALUMINUM PRODUCTS, INC.
1339 SW 1ST WAY
DEERFIELD BEACH, FL 33441
(954) 480-6919

ALUMINUM A/C STANDS
FLORIDA BUILDING CODE EIGHTH EDITION (2023)
FLORIDA STATEWIDE APPROVAL (FSA FL#16921.1)

REMARKS	DRWN	CHKD	DATE
PREV. SUBMITTAL (20-32768)	CSL	RWN	12/15/20
2023 FBC UPDATE & TECH. CHANGES	MRT	RWN	12/08/23

COPYRIGHT ENGINEERING EXPRESS®

23-69401

SCALE: NTS UNLESS NOTED

16 OF 18

12/21/2023 1:55 PM MILTON c:\users\milton\engineering express\production - documents\projects\23-\23-69401 2023 product fbc update fl16921\work\2023 fbc\drawings & cad\23-69401c - fl16921.1 - cad.dwg

FRANK BENNARDO, P.E.
PE# 0046549 CA# 9885

FRANK L. BENNARDO LICENSE No PE0046549 STATE OF FLORIDA PROFESSIONAL ENGINEER

12/28/2023

DECEMBER 21, 2023

FL

FL 16921.1

FRAME ASSEMBLY & UNIT TIE-DOWN DETAILS:

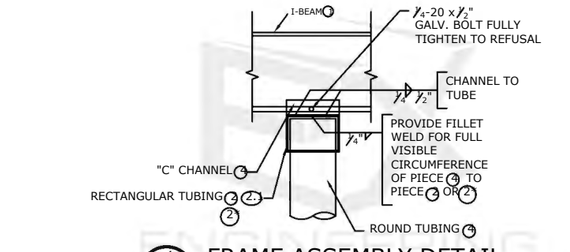

1/17 FRAME ASSEMBLY DETAIL

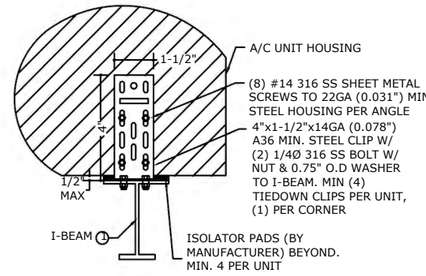

2/17 A/C UNIT TIE-DOWN DETAIL

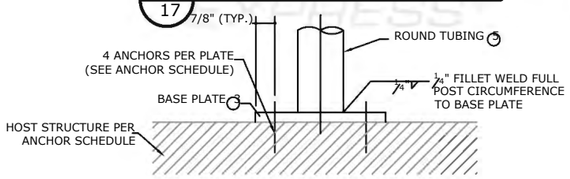

3/17 BASE PLATE DETAIL

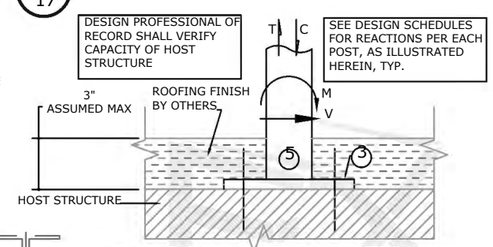

4/17 BASEPLATE REACTIONS

FOR ILLUSTRATIVE PURPOSES ONLY

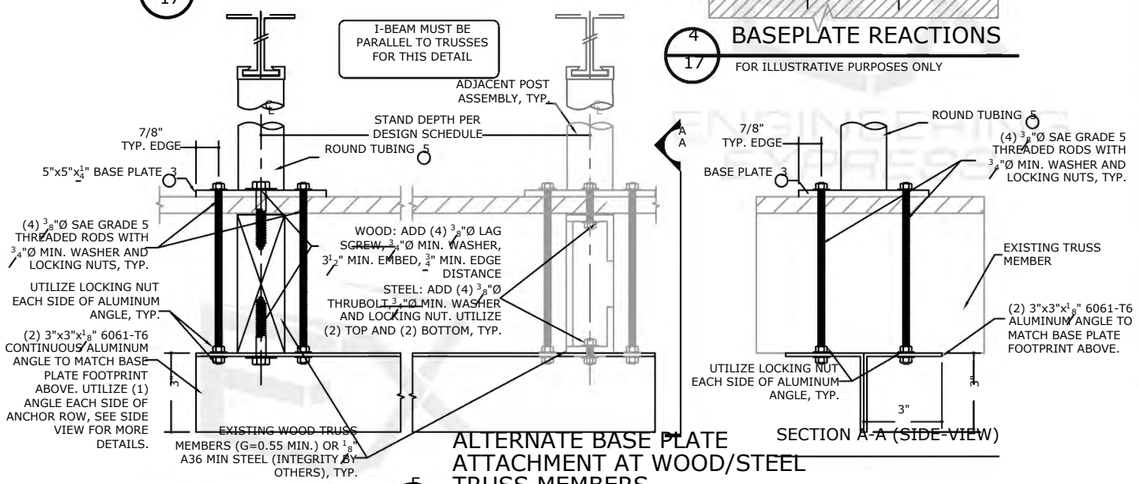

ALTERNATE BASE PLATE ATTACHMENT AT WOOD/STEEL TRUSS MEMBERS

SECTION A-A (SIDE-VIEW)

5/17 FOR USE AS AN ALTERNATE ATTACHMENT METHOD FOR ALL ANCHOR TYPES ON DESIGN SCHEDULE TABLES. SITE SPECIFIC DESIGN RECOMMENDED.

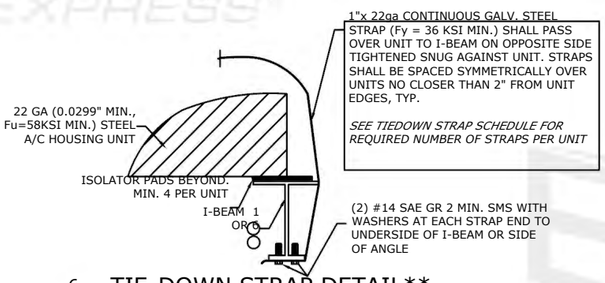

6/17 TIE-DOWN STRAP DETAIL**

NTS

SHALL BE USED **IN COMBINATION WITH ANY A/C UNIT TIE-DOWN DETAIL ON THIS SHEET

TIEDOWN STRAP SCHEDULE

MAX UNIT HEIGHT (in)	MIN UNIT DEPTH (in)	MAX LATERAL PRESSURE (psf)	NO. OF STRAPS REQUIRED (PER UNIT)
UP TO 24	12-19	UP TO 80	0
		UP TO 120	0
		UP TO 200	2
	20	UP TO 80	0
		UP TO 120	0
		UP TO 200	0
UP TO 30	12-19	UP TO 80	0
		UP TO 120	2
		UP TO 200	2
	20	UP TO 80	0
		UP TO 120	0
		UP TO 200	0
UP TO 36	12-19	UP TO 80	0
		UP TO 120	2
		UP TO 200	3
	20	UP TO 80	0
		UP TO 120	0
		UP TO 200	2
UP TO 40	14-23	UP TO 80	0
		UP TO 120	2
		UP TO 200	3
	24	UP TO 80	0
		UP TO 120	2
		UP TO 200	3
UP TO 48	16-23	UP TO 80	3
		UP TO 120	4
		UP TO 200	S
	24	UP TO 80	0
		UP TO 120	2
		UP TO 200	4
UP TO S4	16-23	UP TO 80	4
		UP TO 120	S
		UP TO 200	6
	24	UP TO 80	2
		UP TO 120	3
		UP TO 200	S
UP TO 60	SITE SPECIFIC DESIGN REQUIRED		

TIEDOWN STRAP SCHEDULE NOTE:
SEE DETAIL 1/16 FOR SPECIAL TIEDOWN CONFIGURATION FOR MINI-SPLIT UNITS WITH 30" MAX. WIDTH, 12" MIN. DEPTH & 55" MAX. HEIGHT.

ANCHOR SCHEDULE

FOR USE WITH DETAIL 3 ON THIS SHEET ONLY

ANCHOR TYPE	HOST STRUCTURE	ANCHOR DESCRIPTION
1	STEEL	(4) 3/8"Ø SAE GRADE 2 GALVANIZED BOLTS W/ NUT & 3/4"Ø MIN. WASHER, TO STRUCTURAL A36 STEEL MEMBERS (3/16" MIN HOST THICKNESS)
2	CONCRETE (3KSI MIN.)	(4) 3/8"Ø DEWALT SCREW-BOLT+ CONCRETE ANCHORS OR EQUIVALENT WITH 2-1/2" EMBEDMENT & 3" MIN EDGE DISTANCE, SPACING PER THE FOLLOWING = (BASE PLATE WIDTH - 1.75").
2A **	CONCRETE (5KSI MIN.)	(4) 1/2"Ø DEWALT MINI DROPIN CONCRETE ANCHORS WITH 1" EMBEDMENT & 6" MIN EDGE DISTANCE, SPACING PER THE FOLLOWING = (BASE PLATE WIDTH - 1.75").
2B **	CONCRETE (5KSI MIN.)	(4) 3/8"Ø DEWALT MINI DROPIN CONCRETE ANCHORS WITH 3/4" EMBEDMENT & 6" MIN EDGE DISTANCE, SPACING PER THE FOLLOWING = (BASE PLATE WIDTH - 1.75").
3	WOOD	SEE DETAIL 5/17: USE DETAIL 3/17 FOR GROUND MOUNT ONLY WHEN APPROVED BY EOR/BUILDING OFFICIAL (SEE NOTES BELOW). (4)-3/8Ø LAG SCREWS w/WASHER, 2-1/2" THREAD PENETRATION, 2" EDGE DISTANCE.
4	STEEL	(4) 5/16" SAE GRADE 5 SHEET METAL SCREWS WITH 5/8"Ø MIN. WASHER TO STRUCTURAL A36 STEEL MEMBERS (3/16" MIN HOST THICKNESS)

ANCHOR OPTION 2A NOTE
FOR ANCHOR OPTION 2A, MAXIMUM ALLOWABLE PRESSURES LISTED IN DESIGN SCHEDULES (ANCHOR TYPE: 2 OR 3) SHALL BE MULTIPLIED BY THE FOLLOWING FACTORS:

STD STAND = 0.50
HD STAND & HD CUSTOM BRACE STAND = 0.50
XHD STAND = 0.65
FIXED-HD = 0.60

ANCHOR OPTION 2B NOTE
FOR ANCHOR OPTION 2B, MAXIMUM ALLOWABLE PRESSURES LISTED IN DESIGN SCHEDULES (ANCHOR TYPE: 2 OR 3) SHALL BE MULTIPLIED BY THE FOLLOWING FACTORS:

STD STAND = 0.50
HD STAND & HD CUSTOM BRACE STAND = 0.50
XHD STAND = 0.50
FIXED-HD = 0.50

THE CONNECTION OF THE AC STAND TO THE SUPPORTING HOST STRUCTURE IS ASSUMED TO BE A RIGID CONNECTION. THE INSTALLER SHALL ENSURE THAT ANY ROTATION OF THE SUPPORTING HOST STRUCTURE IS STRICTLY PREVENTED. IN ADDITION, THE INSTALLER SHALL ENSURE THE HOST STRUCTURE CAN ADEQUATELY SUPPORT THE REACTIONS PROVIDED IN THIS APPROVAL.

IF THE INSTALLER IS UNABLE TO VERIFY THESE REQUIREMENTS, THE BUILDING OFFICIAL SHALL REQUIRE A SITE SPECIFIC EVALUATION TO ENSURE STAND STABILITY.

ANCHOR NOTES:

1. ANCHORS SHALL BE INSTALLED IN ACCORDANCE WITH MANUFACTURERS' RECOMMENDATIONS.
2. ENSURE MINIMUM EDGE DISTANCE AS NOTED IN ANCHOR SCHEDULE FOR EACH ANCHOR.
3. ALL CONCRETE SUBSTRATE SHALL HAVE MINIMUM COMPRESSIVE STRENGTH OF 3000 PSI, U.N.O. CONCRETE SUBSTRATE THICKNESS SHALL BE GREATER THAN OR EQUAL TO 1.5xANCHOR EMBEDMENT. INSTALL CONCRETE ANCHORS TO UN-CRACKED CONCRETE ONLY.
4. MINIMUM EMBEDMENT SHALL BE AS NOTED IN ANCHOR SCHEDULE. MINIMUM EMBEDMENT AND EDGE DISTANCE EXCLUDES ROOFING FINISHES.
5. WHERE EXISTING STRUCTURE IS WOOD TRUSSES, EXISTING CONDITIONS MAY VARY. FIELD VERIFY THAT FASTENERS ARE INTO ADEQUATE WOOD TRUSS MEMBERS, NOT INTO PLYWOOD.

ENGINEERING EXPRESS®
POSTAL ADDRESS:
2234 NORTH FEDERAL HWY #7664
BOCA RATON, FL 33431
ENGINEERINGEXPRESS.COM

PRECISION ALUMINUM PRODUCTS, INC.
1339 SW 1ST WAY
DEERFIELD BEACH, FL 33441
(954) 480-6919

ALUMINUM A/C STANDS
FLORIDA BUILDING CODE EIGHTH EDITION (2023)
FLORIDA STATEWIDE APPROVAL (FSA FL# 16921.1)

REMARKS	DRWN	CHKD	DATE
PREV. SUBMITTAL (20-32768)	CSL	RWN	12/15/20
2023 FBC UPDATE & TECH. CHANGES	MRT	RWN	12/08/23

COPYRIGHT ENGINEERING EXPRESS®

23-69401

SCALE: NTS UNLESS NOTED

12/21/2023 1:56 PM MILTON c:\users\milton\engineering express\production - documents\projects\23-\23-69401 2023 product fbc update fl16921\work\2023 fbc\drawings & cad\23-69401c - fl16921.1 - cad.dwg

12/21/2023 1:56 PM MILTON c:\users\milton\engineering express\production - documents\projects\23-\23-69401 2023 product fbc update fl16921\work\2023 fbc\drawings & cad\23-69401c - fl16921.1 - cad.dwg

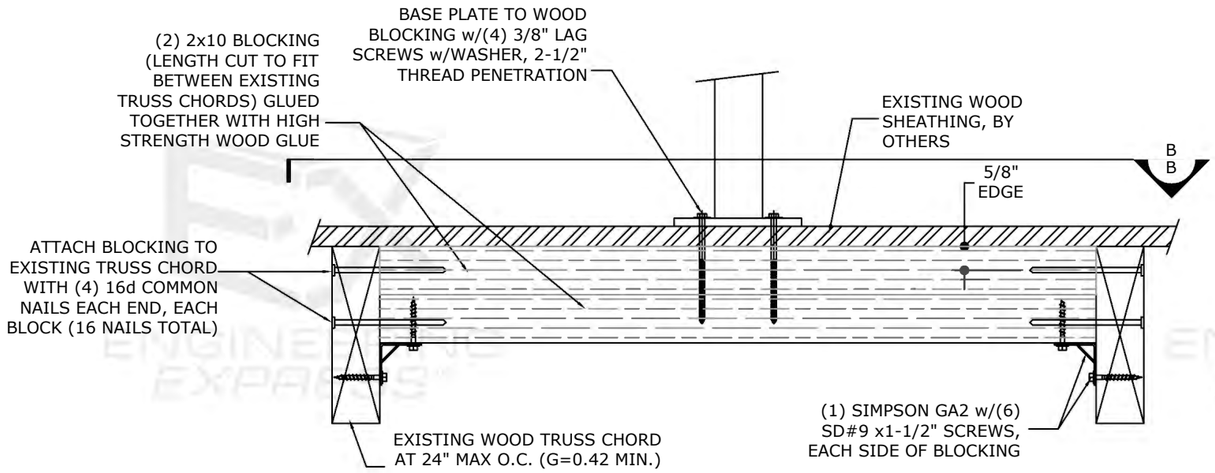

SECTION A-A (SECTION-VIEW)

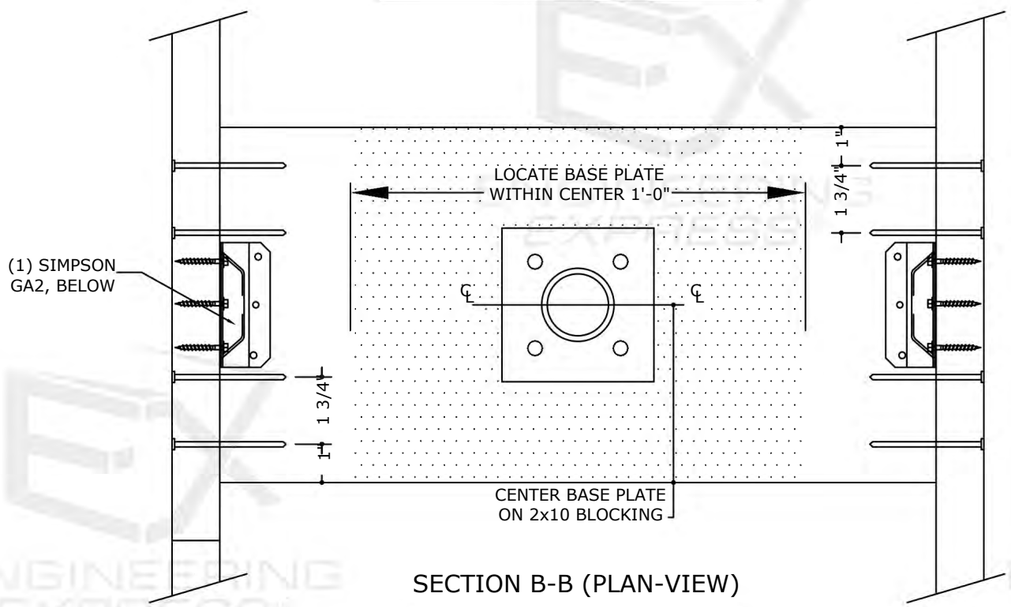

SECTION B-B (PLAN-VIEW)

ALTERNATE BASE PLATE ATTACHMENT AT WOOD TRUSS MEMBERS

1/18

FOR USE AS AN ALTERNATE ATTACHMENT METHOD FOR TO WOOD

NOTE: USE OF THIS DETAIL (1/18) IS RESTRICTED TO FOLLOWING:

- ONLY APPLICABLE FOR THE FOLLOWING STAND TYPES: STD, HD, FIXED-HD
- LIMITED TO 60% OF THE ALLOWABLE DESIGN PRESSURE LISTED IS THE DESIGN TABLES.

EXAMPLE:	MAX ALLOWABLE LATERAL LOAD PER DESIGN SCHEDULES	= 95 PSF	
	MAX ALLOWABLE UPLIFT LOAD PER DESIGN SCHEDULE	= 70 PSF	
	MAX ALLOWABLE LATERAL LOAD PER DETAIL (1/18)	= 95 PSF x (0.60)	= 57 PSF
	MAX ALLOWABLE UPLIFT LOAD PER DETAIL (1/18)	= 70 PSF x (0.60)	= 42 PSF

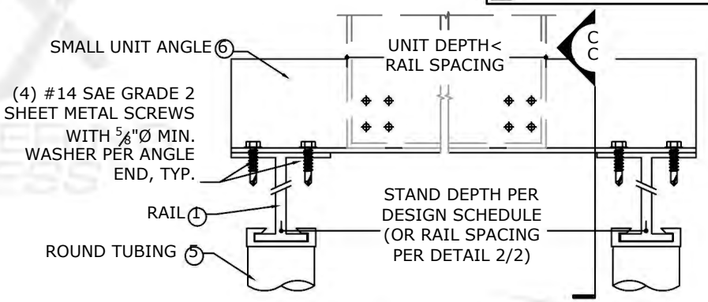

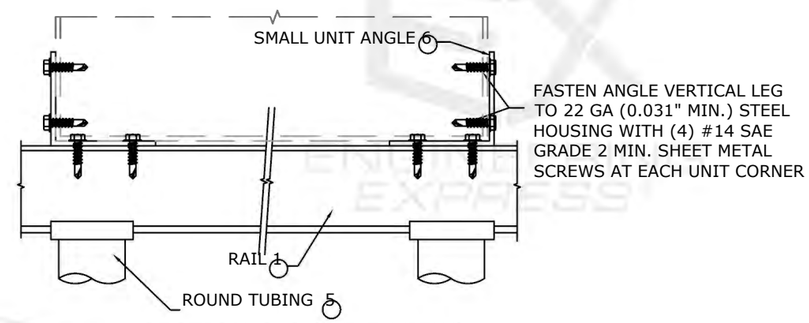

SECTION C-C (SIDE-VIEW)

SMALL UNIT ANGLE ATTACHMENT DETAIL

2/18

NTS

THE CONNECTION OF THE AC STAND TO THE SUPPORTING HOST STRUCTURE IS ASSUMED TO BE A RIGID CONNECTION. THE INSTALLER SHALL ENSURE THAT ANY ROTATION OF THE SUPPORTING HOST STRUCTURE IS STRICTLY PREVENTED. IN ADDITION, THE INSTALLER SHALL ENSURE THE HOST STRUCTURE CAN ADEQUATELY SUPPORT THE REACTIONS PROVIDED IN THIS APPROVAL.

IF THE INSTALLER IS UNABLE TO VERIFY THESE REQUIREMENTS, THE BUILDING OFFICIAL SHALL REQUIRE A SITE SPECIFIC EVALUATION TO ENSURE STAND STABILITY.

FRANK BENNARDO, P.E.
PE# 0046549 CA# 9885

FRANK L. BENNARDO LICENSE No PE0046549 STATE OF FLORIDA PROFESSIONAL ENGINEER

12/28/2023

DECEMBER 21, 2023

FL

FL 16921.1

ENGINEERING EXPRESS®
POSTAL ADDRESS:
2234 NORTH FEDERAL HWY #7664
BOCA RATON, FL 33431
ENGINEERINGEXPRESS.COM

PRECISION ALUMINUM PRODUCTS, INC.
1339 SW 1ST WAY
DEERFIELD BEACH, FL 33441
(954) 480-6919

ALUMINUM A/C STANDS
FLORIDA BUILDING CODE EIGHTH EDITION (2023)
FLORIDA STATEWIDE APPROVAL (FSA FL# 16921.1)

REMARKS	DRWN	CHKD	DATE
PREV. SUBMITTAL (20-32768)	CSL	RWN	12/15/20
2023 FBC UPDATE & TECH. CHANGES	MRT	RWN	12/08/23

COPYRIGHT ENGINEERING EXPRESS®

23-69401

SCALE: NTS UNLESS NOTED

SET-UP MANUAL

JACOBSEN
HOMES

600 PACKARD COURT
SAFETY HARBOR, FLORIDA 34695
(727) 726-1138

NOTICE

These specifications and drawing are original, proprietary, and confidential materials of Jacobsen Manufacturing, Inc. Such materials are provided to the recipient for specific purposes and must be kept confidential and secret from others.

SU-00-0000
01/01/09

MANUFACTURED HOME SET-UP

*SITE PREPARATION
(A.) BLOCKING
(B.) LEVELING
(C.) ASSEMBLY AND CLOSE-UP
*TIEDOWNS (SEE SET-UP MANUAL ADDENDUM)
*ELECTRICAL CONNECTIONS
*PLUMBING CONNECTIONS
*A.C. CONNECTIONS
*ON SITE VENT CONNECTIONS
*MISCELLANEOUS DETAILS

SITE PREPARATION

IF YOU ARE GOING TO LIVE IN A PARK, YOUR HOME SITE WILL BE READY OR BE PREPARED FOR YOUR HOME. IF YOU INTEND TO INSTALL YOUR HOME ON YOUR OWN LOT (NOT IN A PARK), SOME SITE PREPARATION WILL BE NECESSARY.

ALL DRAINAGE (AT THE INSTALLATION SITE) MUST BE DIVERTED AWAY FROM THE HOME AND MUST SLOPE A MINIMUM OF 1/2" PER FOOT AWAY FROM THE FOUNDATION OR SKIRTING FOR THE FIRST 10'.

THE SITE MUST BE GRADED TO PROVIDE FOR STORM RUN-OFF. SPECIAL CARE MUST BE TAKEN WITH THE AREA DIRECTLY BELOW YOUR HOME TO PREVENT WATER FROM PONDING AND/OR PUDDLING UNDER YOUR HOME AND SUPPORTS. IF THE SPACE UNDER THE HOME IS TO BE ENCLOSED WITH SKIRTING OR OTHER MATERIALS, A VAPOR RETARDER (I.E. POLY...) MUST BE INSTALLED TO COVER THE GROUND UNDER THE HOME (SHALL BE 6 MIL. AND ALL SEAMS TO OVERLAP 12" MIN.)

REPAIR ANY TEARS OR VOIDS IN THE RETARDER BY PATCHING WITH LIKE MATERIAL, MAINTAINING A MINIMUM 12" OVERLAP AND SEALING JOINTS WITH DUCT TAPE OR MASTIC.

PIER SUPPORTS MUST BE PLACED ON UNDISTURBED SOIL (ALL GRASS AND ORGANIC MATERIAL MUST BE REMOVED) OR FILL WHICH IS COMPACTED OR FULLY SETTLED (SEE SU-4.1, DETAIL 'A' AND DETAIL 'B'). IN AREAS THAT ARE SUSCEPTIBLE TO FROST, PIER SUPPORTS MUST BE BELOW THE FROST LINE.

OPTIONAL: PIERS MAY BE PLACED ON CONCRETE RIBBONS
6" X 16" X LENGTH OF HOME MINUS 18",
REINFORCED WITH WELDED WIRE MESH.

(A.) BLOCKING

UNLIKE A STANDARD HOUSE, YOUR MANUFACTURED HOUSE DOES NOT NEED A FOUNDATION TO SUPPORT IT COMPLETELY AROUND ITS PERIMETER. THE STEEL FRAME OR CHASSIS USED FOR TRANSPORTATION ALSO SUPPORTS THE HOME AT ITS HOME SITE. THE STEEL FRAME MUST BE SUPPORTED (SEE SU-01-0003 & 0004) TO PREVENT YOUR HOME FROM SAGGING, AND TO KEEP IT LEVEL. NOTE: ADDITIONAL PIERS ARE REQUIRED AT ALL RIDGE BEAM SUPPORT COLUMNS (EXCEPT AT THE FRAME HEADER), SHEARWALLS, AND AROUND THE PERIMETER OF YOUR HOME. CHECK FOR THE APPROPRIATE DETAILS FOUND IN THIS AND THE SET-UP MANUAL ADDENDUM FOR SPECIFICS FOR EACH TYPE OF ADDITIONAL BLOCKING REQUIRED. SPECIFIC BLOCKING LABELS ARE FOUND ON THE EXTERIOR SIDES OF YOUR HOME.

MAXIMUM HEIGHT OF A PIER IS DETERMINED BY THE TYPE OF PIER USED, CHECK THE APPROPRIATE DETAILS FOR THE PROPER CONSTRUCTION OF EACH DIFFERENT TYPE OF PIER. (ALSO SEE TIE-DOWN REQUIREMENTS TO DETERMINE MAXIMUM HEIGHT FROM GROUND.)

ALL SUPPORTING STRUCTURES NOT LISTED OR SHOWN IN THIS MANUAL OR SET-UP MANUAL ADDENDUM MUST BE APPROVED BY A REGISTERED PROFESSIONAL ENGINEER.

(B.) LEVELING

PROPER BLOCKING SEQUENCE IS ESSENTIAL IN THE LEVELING OF YOUR HOME. (SEE BLOCKING DETAILS ON SU-01-0002 ,0003, & 0004) FOR THE RECOMMENDED BLOCKING SEQUENCE, TAKING CARE TO CHECK YOUR LEVEL BETWEEN EACH STEP AND SUPPORT. RECOMMENDED LEVEL IS A 48" CARPENTER'S LEVEL. (SEE ACCEPTABLE LEVELING GUIDE BELOW)

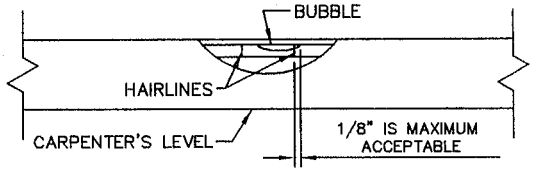

SPECIAL NOTE FOR ALL HOMES SET IN FLORIDA

CHECK FLORIDA STATUTE 15C FOR ANY LIMITAIONS THAT MAY AFFECT THESE INSTRUCTIONS.

JACOBSEN HOMES
P.O. BOX 368
SAFETY HARBOR, FLORIDA 34695
PHONE (727) 726-1138

NOTICE:
THESE SPECIFICATIONS AND DRAWINGS ARE ORIGINAL, PROPRIETARY, AND CONFIDENTIAL MATERIALS OF JACOBSEN MANUFACTURING INC. SUCH MATERIALS ARE PROVIDED TO THE RECIPIENT FOR SPECIFIC PURPOSES AND MUST BE KEPT CONFIDENTIAL AND SECRET FROM OTHERS.

DRAWN BY: O.A.	DATE: 11-21-06	REV. LETTER: B (10-08-08)
DRAWING TITLE: MANUFACTURED HOME SET-UP		
DRAWING NUMBER: SU-01-0001		

DETAILS "A" AND "B"

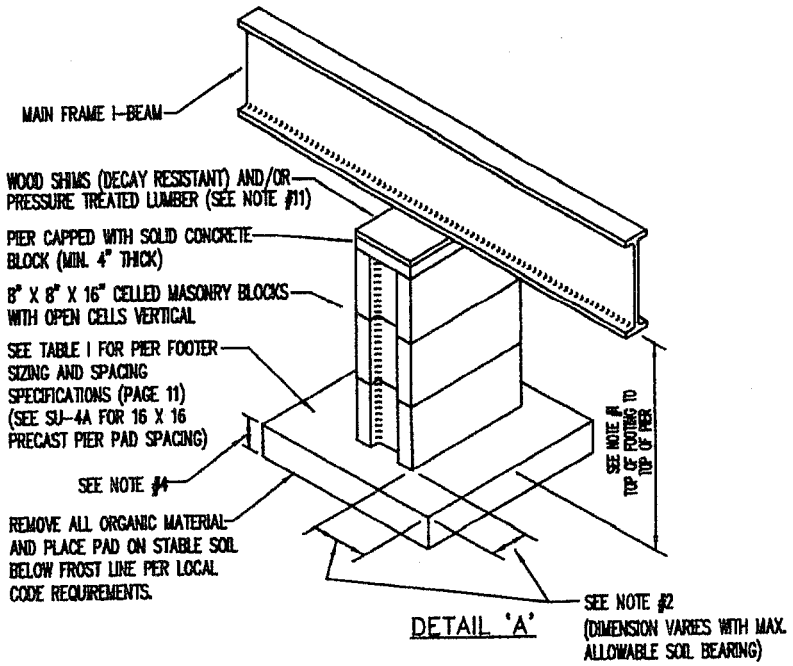

DETAIL 'A'

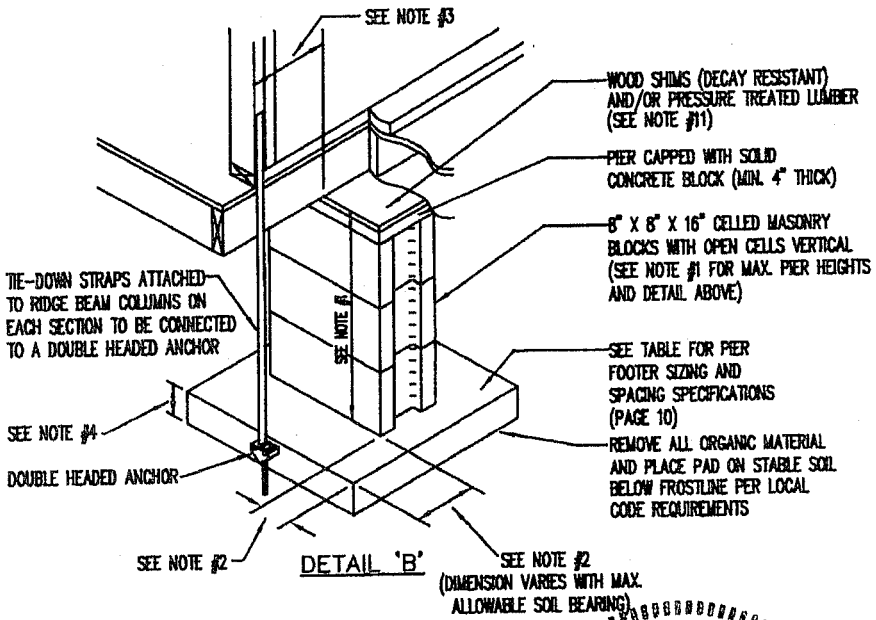

DETAIL 'B'

NOTES:

1. 36" MAX. SINGLE STACKED FOR HOLLOW BLOCKS AT I-BEAMS. 54" MAX. PIER BLOCK DRY STACKED AT PERIMETER & MATING LINE. (PIER SYSTEMS ANY TALLER MUST BE APPROVED BY A LICENSED ARCHITECT OR ENGINEER)
2. MAXIMUM PIER/PAD PROJECTION: SEE OTHER DETAILS
3. ALL PIERS MUST BE CENTERED ON FOOTERS MUST BE WITHIN 1/2" OF PLUMB PER 3285 STANDARDS.
4. MARRIAGE WALL OPENING PIERS TO BE WITHIN 6" OF OPENING ON EITHER SIDE OF COLUMN. (WHEN REQUIRED FOOTER SIZE PREVENTS A SINGLE STACKED PIER FROM MEETING THIS, USE A DOUBLE STACKED PIER. GOOD UP TO 28 X 28 FOOTER.)
5. MINIMUM PIER PAD THICKNESS:
   A. 4" MIN. FOR PRECAST UNITS UP TO 16" X 16"
   B. FOR CAST IN PLACE FOOTINGS ON 2000 PSF SOIL (MAX.) THE MIN. THICKNESS IS MAX. FOOTING DIMENSION DIVIDED BY 4.(BUT NOT LESS THAN 6")
6. ALL FOOTING CONCRETE TO HAVE COMPRESSIVE STRENGTH. (fc') = 3000 PSI (MIN.)
7. PLACE 6 MIL POLY ON GROUND PRIOR TO POURING FOOTING CONCRETE. (ALL SEAMS TO OVERLAP 12" MIN.)
8. PIERS SUPPORTING THE I-BEAMS TO BE WITHIN 24" OF BOTH ENDS AND NO MORE THAN 10' O.C.
9. PIERS MAY BE OFFSET UP TO 6" IN EITHER DIRECTION ALONG THE I-BEAMS TO ALLOW FOR PLUMBING, ELECTRICAL, ETC.
10. FOOTING CONSTRUCTION MUST COMPLY WITH LOCAL BUILDING CODES.
11. WOOD SHIMS, WHEN REQUIRED ARE TO BE USED IN PAIRS INSTALLED IN OPPOSITE DIRECTIONS AND FITTED TIGHT BETWEEN THE I-BEAM AND PIER CAP. SHIMS MUST BE MIN. 4" LONG BY 6" WIDE AND NO MORE THAN 1" IN THICKNESS.

ENGINEER APPROVAL:

JOHN C. DEGEN LICENSE No 45484 STATE OF FLORIDA PROFESSIONAL ENGINEER

12/15/08

DAPIA APPROVAL:

APPROVED BY NTA INC. Revised Dec 17,2008

FEDERAL MANUFACTURED HOME CONSTRUCTION AND SAFETY STANDARDS

JACOBSEN HOMES

P.O. BOX 368
SAFETY HARBOR, FLORIDA 34695
PHONE (727) 726-1138

NOTICE:
THESE SPECIFICATIONS AND DRAWINGS ARE ORIGINAL, PROPRIETARY, AND CONFIDENTIAL MATERIALS OF JACOBSEN MANUFACTURING INC. SUCH MATERIALS ARE PROVIDED TO THE RECIPIENT FOR SPECIFIC PURPOSES AND MUST BE KEPT CONFIDENTIAL AND SECRET FROM OTHERS.

DRAWN BY: O.A.	DATE: 09-07-93		REV. LETTER: A
DRAWING TITLE: DETAILS "A" & "B"			(12-15-08)
DRAWING NUMBER: SU-01-0001.1			

MOBILE HOME SET-UP

NOTES:

1. JACKS TO BE RATED AT 5 TONS.
2. ALWAYS USE A SUPPORT UNDER JACKS.
3. FOLLOW BLOCKING INSTRUCTIONS.
4. FOR MULTIPLE WIDES SET HEAVY SECTION FIRST.

BLOCKING SEQUENCE

1. LOCATE HOME ON SITE AND LEVEL AS CLOSE AS POSSIBLE USING HITCH JACK.
2. SET SUPPORTS (BLOCKS #1) UNDER BOTH I-BEAMS JUST FORWARD OF THE FRONT SPRING HANGERS.
3. SET SUPPORTS (BLOCKS #2) UNDER BOTH I-BEAMS JUST BEHIND THE REAR SPRING HANGERS.
4. LOCATE SUPPORTS (BLOCKS #3) MAXIMUM 24" BEHIND THE FRONT CROSSMEMBER.
5. LOCATE SUPPORTS (BLOCKS #4) MAXIMUM 24" FROM THE END OF THE HOME.
6. ADDITIONAL SUPPORTS (BLOCKS #5) MAY BE NECESSARY BETWEEN 1 & 3 AND 2 & 4, IF THEY ARE NEEDED THEY SHOULD BE SPACED EQUALLY, MAXIMUM SPACING 10'-0".
7. IF YOUR HOME HAS 4 AXLES ADD BLOCKING BETWEEN THE MIDDLE SET OF AXLES.
8. FOR SINGLE WIDES BLOCKING IS COMPLETE.
9. FOR MULTIPLE WIDES REMOVE ALL SHIPPING BATTENS AND VISQUEEN AND SET LIGHT SECTION(S) AS CLOSE AS POSSIBLE TO THE ALREADY SET HEAVY SECTION.
10. JACK THE LIGHT SECTION(S) TO THE HEAVY SECTION USING JACKS AND COME-ALONGS.
11. FOLLOW BLOCKING SEQUENCES 1 THRU 7.

NOTES:

1. THESE FOUNDATION SPECIFICATIONS HAVE NOT BEEN DESIGNED FOR FLOOD-RESISTANT SPECIFICATIONS.
2. PERIODIC RELEVELING MAY BE NECESSARY BECAUSE OF THE WEIGHT OF THE HOME AND SETTLING THAT MAY OCCUR.

JACOBSEN HOMES
P.O. BOX 368
SAFETY HARBOR, FLORIDA 34695
PHONE (727) 726-1138

NOTICE:
THESE SPECIFICATIONS AND DRAWINGS ARE ORIGINAL, PROPRIETARY, AND CONFIDENTIAL MATERIALS OF JACOBSEN MANUFACTURING INC. SUCH MATERIALS ARE PROVIDED TO THE RECIPIENT FOR SPECIFIC PURPOSES AND MUST BE KEPT CONFIDENTIAL AND SECRET FROM OTHERS.

DRAWN BY: O.A.	DATE: 06-06-94	REV. LETTER: A (09-30-08)
DRAWING TITLE: MOBILE HOME SET-UP #2		
DRAWING NUMBER: SU-01-0002		

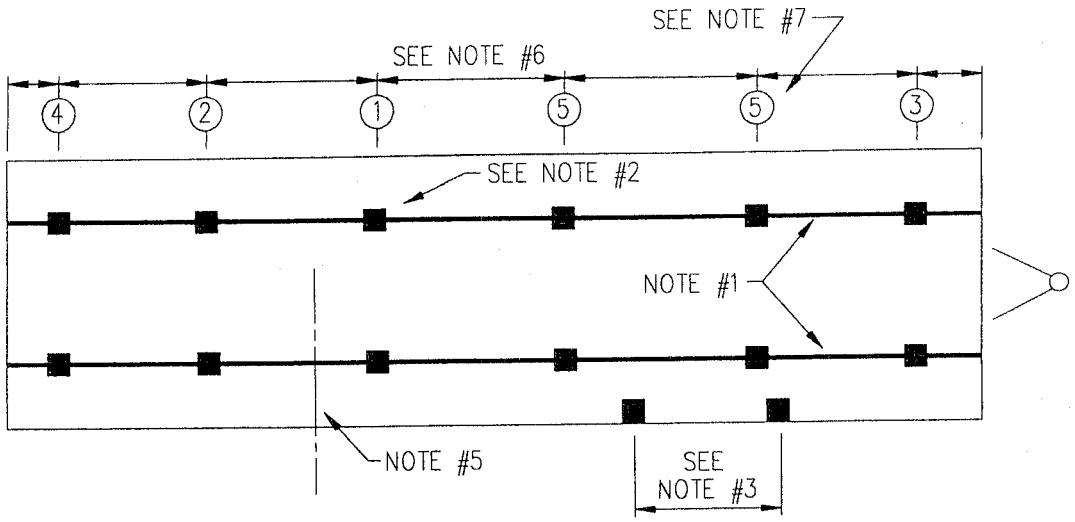

TYPICAL SINGLE WIDE BLOCKING

(SEE SU-01-0004 FOR NOTES)

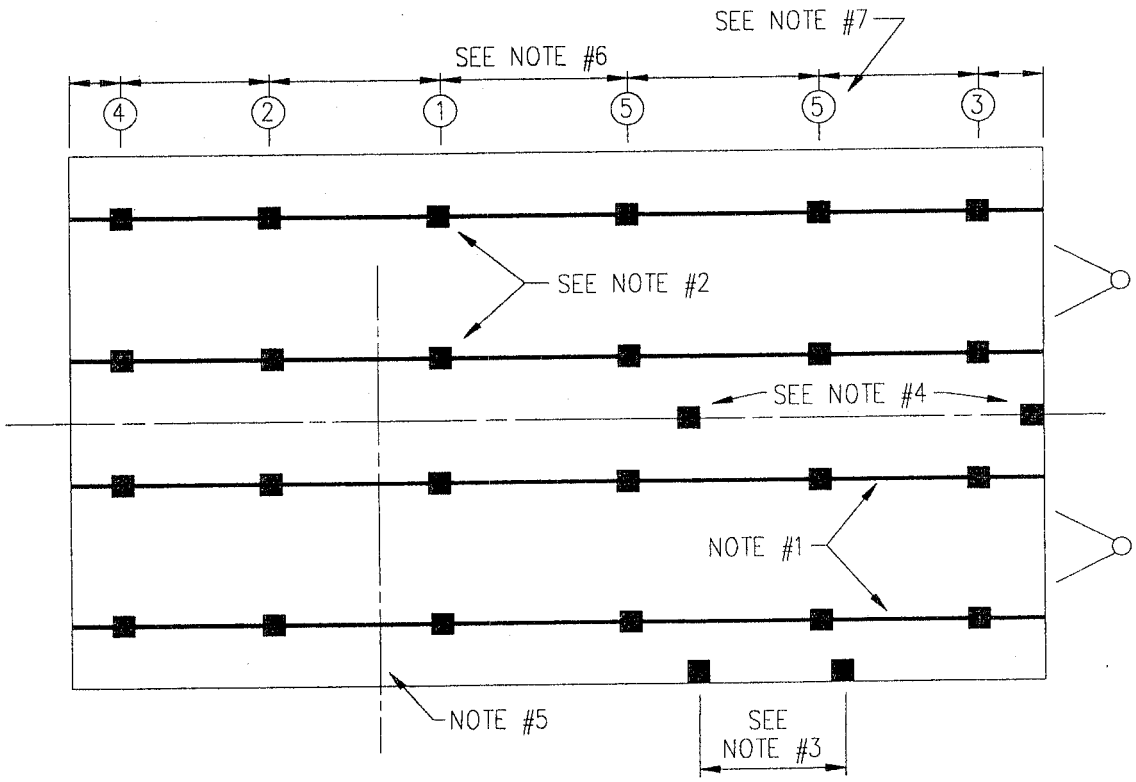

TYPICAL DOUBLE WIDE BLOCKING

(SEE SU-01-0004 FOR NOTES)

JACOBSEN HOMES

P.O. BOX 368
SAFETY HARBOR, FLORIDA 34695
PHONE (727) 726-1138

NOTICE:
THESE SPECIFICATIONS AND DRAWINGS ARE ORIGINAL, PROPRIETARY, AND CONFIDENTIAL MATERIALS OF JACOBSEN MANUFACTURING INC. SUCH MATERIALS ARE PROVIDED TO THE RECIPIENT FOR SPECIFIC PURPOSES AND MUST BE KEPT CONFIDENTIAL AND SECRET FROM OTHERS.

DRAWN BY: S.A.	DATE: 6-6-94	REV. LETTER: —
DRAWING TITLE: DOUBLE WIDE BLOCKING		
DRAWING NUMBER: SU-01-0003		

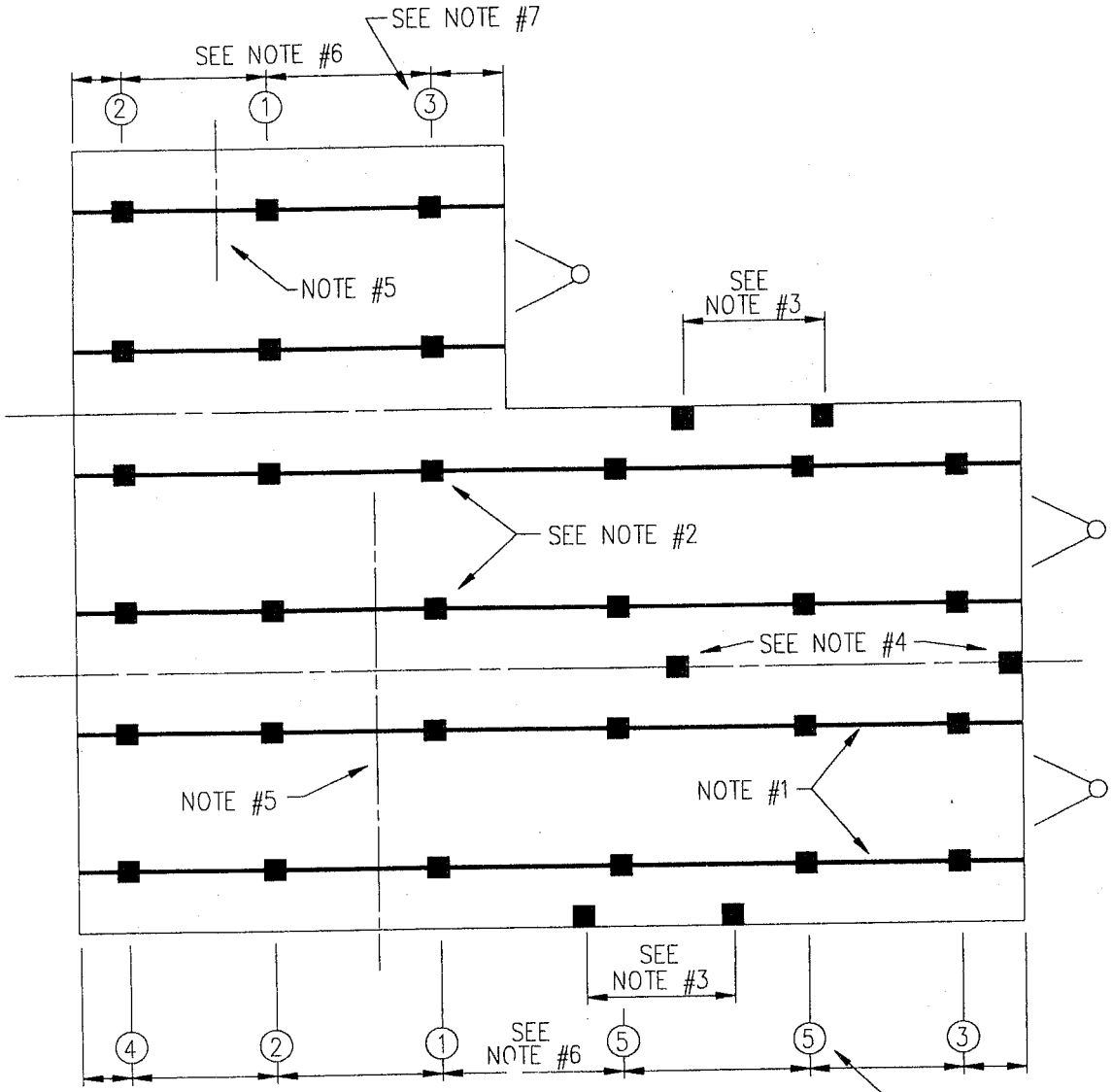

TYPICAL TRIPLE WIDE BLOCKING

NOTES

#1-MAIN FRAME I-BEAMS
#2-LOCATE PIERS UNDER FRAME I-BEAMS
#3-LOCATE PIERS UNDER CLOSEST FLOOR JOIST EACH SIDE OF OPENINGS 48" AND LARGER. (I.E.-RECESSED ENTRIES AND SL. GL. DRS.) SEE TABLE FOR PIER FOOTER SIZING PAGE 10.
#4-LOCATE PIERS UNDER MARRIAGE WALL PERIMETER JOISTS WITHIN 6" OF EACH SIDE OF OPENINGS. 48" & LARGER AND RIDGE BEAM COLUMNS. SEE TABLE FOR PIER FOOTER SIZING SU-01-0030 AND SEE DETAIL 'B', SU-01-0010.
#5-AXLE ASSEMBLY CENTER LINE
#6-SEE TABLE I FOR PIER FOOTER SIZING AND PIER SPACING INFORMATION SU-01-0040, AND DETAIL 'A' SU-01-0010.
#7 ;CKING SEQUENCE NUMBERS, SEE SU-01-0002 FOR PROPER BLOCKING PROCEDURES.

JACOBSEN HOMES
P.O. BOX 368
SAFETY HARBOR, FLORIDA 34695
PHONE (727) 726-1138

NOTICE:
THESE SPECIFICATIONS AND DRAWINGS ARE ORIGINAL, PROPRIETARY, AND CONFIDENTIAL MATERIALS OF JACOBSEN MANUFACTURING INC. SUCH MATERIALS ARE PROVIDED TO THE RECIPIENT FOR SPECIFIC PURPOSES AND MUST BE KEPT CONFIDENTIAL AND SECRET FROM OTHERS.

DRAWN BY: S.A.	DATE: 6-6-94	REV. LETTER: —
DRAWING TITLE: TRIPLE WIDE BLOCKING		
DRAWING NUMBER: SU-01-0004		

ADDITIONAL PERIMETER BLOCKING

(THIS BLOCKING IS IN ADDITION TO BLOCKING REQUIRED IN THIS MANUAL)

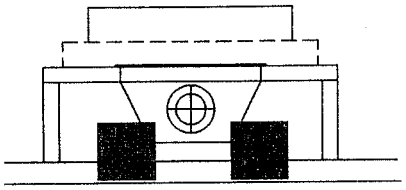

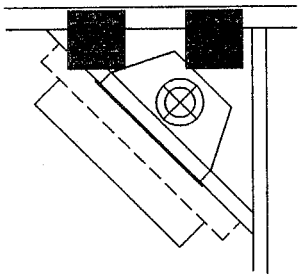

TYP. FIREPLACES ON SIDEWALL OR MARRIAGE WALL

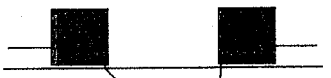

UNDER EACH SIDE OF ALL EXTERIOR DOORS LOCATED ON SIDEWALLS

2 OR MORE 46 1/2" WINDOWS
PIERS REQUIRED AT EACH END
AND BETWEEN EACH OPENING

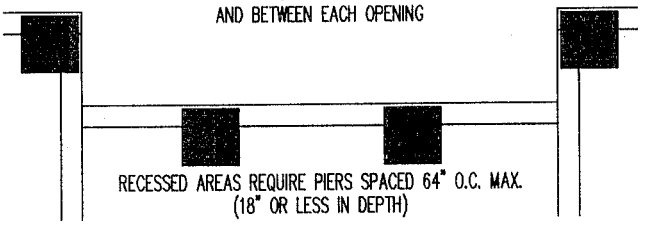

RECESSED AREAS REQUIRE PIERS SPACED 64" O.C. MAX.
(18" OR LESS IN DEPTH)

EACH END OF RECESSED AREAS

HOST BEAM NOTE

PERIMETER BLOCKING REQUIRED AT 48" O.C. MAX.

RECESSED AREAS W/SIDE BAY REQUIRE PIERS SPACED 64" O.C. MAX.
THIS ALSO APPLIES TO ALL ENDWALL BAY WINDOWS
UNLESS SUPPORTED BY A FRAME MEMBER

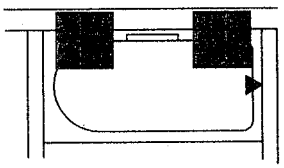

54" OR 60" TUB AT SIDEWALL OR MARRIAGE WALL

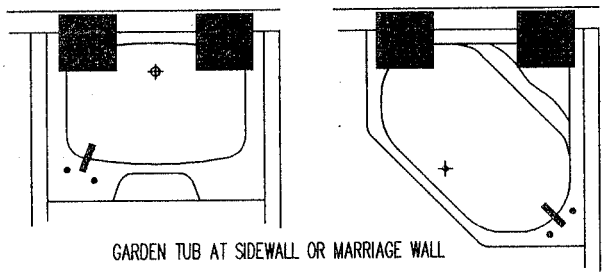

GARDEN TUB AT SIDEWALL OR MARRIAGE WALL

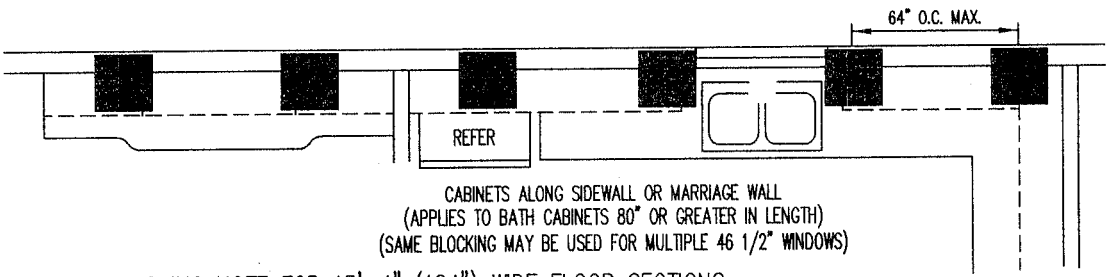

CABINETS ALONG SIDEWALL OR MARRIAGE WALL
(APPLIES TO BATH CABINETS 80" OR GREATER IN LENGTH)
(SAME BLOCKING MAY BE USED FOR MULTIPLE 46 1/2" WINDOWS)

SPECIAL BLOCKING NOTE FOR 15'-4" (184") WIDE FLOOR SECTIONS

PERIMETER BLOCKING IS REQUIRED (MARRIAGE AND SIDEWALLS) 64" ON CENTER MAX. SPACING
NOTE: LEVEL FLOOR SYSTEM FIRST (SIDEWALL TO SIDEWALL OR MARRIAGE WALL) BEFORE INSTALLING PERIMETER BLOCKS

NOTES:
1. ADDITIONAL BLOCKING REQUIRED AS INDICATED ABOVE (USE 16" X 16" PIER PADS).
2. LOCATE BLOCKING UNDER PERIMETER JOIST OR WITHIN 8" OF END OF 16" O.C. JOISTS.
3. COLUMN PIERS ARE IN ADDITION TO REQUIRED PIERS UNDER FULL-HEIGHT MATING WALLS.
4. PERIMETER BLOCKING IS REQUIRED UNDER TILE FLOORS (MARRIAGE & SIDEWALLS) 64" O.C. MAX..
5. PIERS USED FOR PERIMETER SUPPORT MUST BE INSTALLED WITH THE LONG DIMENSION PARALLEL TO THE PERIMETER RAIL.
6. WHEN PERIMETER BLOCKING IS REQUIRED ANY MATING LINE OPEN SPAN GREATER THAN 10', MUST HAVE INTERMEDIATE PIERS PLACED AT MAX. 10' O.C. EXCEPT 15'-4" WIDE, SEE SPECIAL NOTE.

JACOBSEN HOMES
P.O. BOX 368
SAFETY HARBOR, FLORIDA 34695
PHONE (813) 726-1138

NOTICE:
THESE SPECIFICATIONS AND DRAWINGS ARE ORIGINAL, PROPRIETARY, AND CONFIDENTIAL MATERIALS OF JACOBSEN MANUFACTURING INC. SUCH MATERIALS ARE PROVIDED TO THE RECIPIENT FOR SPECIFIC PURPOSES AND MUST BE KEPT CONFIDENTIAL AND SECRET FROM OTHERS.

DRAWN BY: O.A.	DATE: 4-12-00		REV. LETTER: C
DRAWING TITLE: ADDITIONAL BLOCKING			
DRAWING NUMBER: SU-01-0005			(09-30-08)

BLOCKING (PIER) LABELS

LOCATE THESE LABELS AND CHECK THE APPROPRIATE MANUAL FOR PROPER INSTALLATION OF BLOCKING AND PIERS..

SHEARWALL PIER LOCATIONS

SEE SET-UP ADDENDUM FOR SPECIFICS

COLUMN PIER LOCATION

SEE SET-UP MANUAL FOR SPECIFICS

(LOCATE THESE PIERS AT THE MARRIAGE LINE)

BOTTOM OF EXTERIOR SIDING AT SIDEWALL

SPECIFIC PERIMETER PIER LOCATION

SEE SET-UP MANUAL FOR SPECIFICS

GENERAL PERIMETER BLOCKING 64" O.C. MAX.

(SEE SET-MANUAL FOR SPECIFICS)

BOTTOM OF EXTERIOR SIDING AT SIDEWALL

NOTES:

1. THIS IS INCLUDED IN THE HOME OWNERS PACKAGE.

JACOBSEN HOMES

P.O. BOX 368
SAFETY HARBOR, FLORIDA 34695
PHONE (727) 726-1138

NOTICE:
THESE SPECIFICATIONS AND DRAWINGS ARE ORIGINAL, PROPRIETARY, AND CONFIDENTIAL MATERIALS OF JACOBSEN MANUFACTURING INC. SUCH MATERIALS ARE PROVIDED TO THE RECIPIENT FOR SPECIFIC PURPOSES AND MUST BE KEPT CONFIDENTIAL AND SECRET FROM OTHERS.

DRAWN BY: M.T.	DATE: 05-20-06	REV. LETTER: —
DRAWING TITLE: BLOCKING (PIER) LABELS		
DRAWING NUMBER: SU-01-0006		

ADDITIONAL RECESSED PORCH BLOCKING

(THIS BLOCKING IS IN ADDITION TO BLOCKING REQUIRED IN THIS MANUAL)

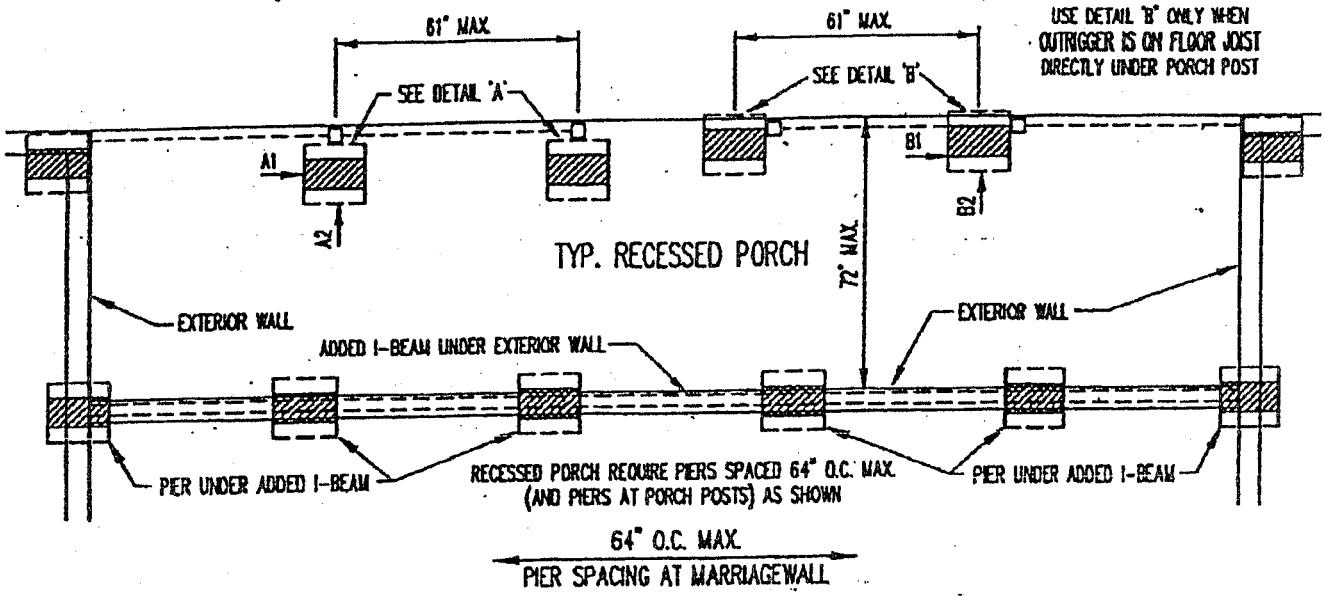

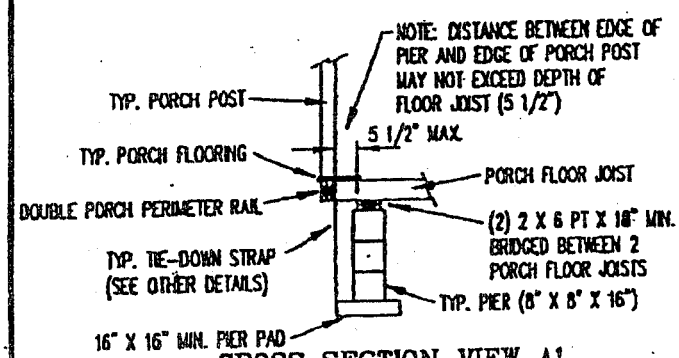

CROSS SECTION VIEW A1

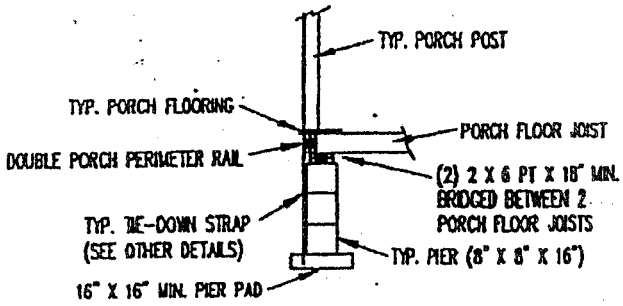

CROSS SECTION VIEW B1

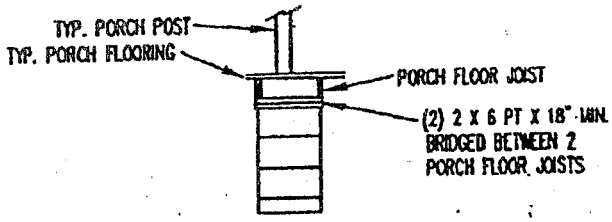

LONGITUDINAL VIEW A2

DETAIL 'A'

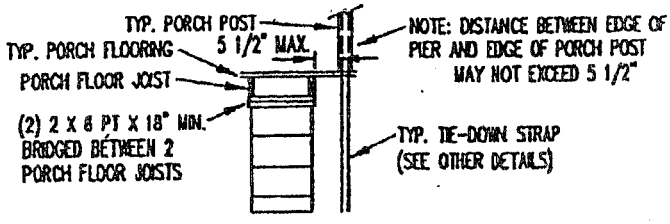

LONGITUDINAL VIEW B2

DETAIL 'B'

NOTES:

NOTES:

1. ADDITIONAL BLOCKING REQUIRED AS INDICATED ABOVE (USE 16" X 16" PIER PADS ON 1000 PSF SOIL CAPACITY)
2. LOCATE BLOCKING UNDER PERIMETER JOIST OR WITHIN 5 1/2" OF END OF 16" O.C. JOISTS
3. PERIMETER BLOCKING IS REQUIRED UNDER PORCH AT EACH POST (61" O.C. MAX.)
4. ADDITIONAL BLOCKING REQUIRED AS INDICATED ABOVE UNDER CENTER OF ADDED I-BEAM (64" O.C. MAX.)
5. SEE OTHER DETAILS FOR OTHER REQUIRED BLOCKING LOCATIONS
6. ADDED I-BEAM AT PORCH/EXTERIOR WALL MAY DIFFER IN SIZE FROM MAIN HOUSE I-BEAM.

ENGINEER APPROVAL:

JOHN A. DEDEN CERTIFICATE No. 0045484 STATE OF FLORIDA REGISTERED ENGINEER

12/10/06

DAPIA APPROVAL:

APPROVED BY NTA INC. Dec 13, 2006

FEDERAL MANUFACTURED HOME CONSTRUCTION AND SAFETY STANDARDS

JACOBSEN HOMES

P.O. BOX 368
SAFETY HARBOR, FLORIDA 34695
PHONE (813) 726-1138

NOTICE:
THESE SPECIFICATIONS AND DRAWINGS ARE ORIGINAL, PROPRIETARY, AND CONFIDENTIAL MATERIALS OF JACOBSEN MANUFACTURING INC. SUCH MATERIALS ARE PROVIDED TO THE RECIPIENT FOR SPECIFIC PURPOSES AND MUST BE KEPT CONFIDENTIAL AND SECRET FROM OTHERS.

DRAWN BY: R.R.	DATE: 11-28-06	REV. LETTER: —	
DRAWING TITLE: ADDITIONAL RECESSED PORCH BLOCKING			
DRAWING NUMBER: SU-01-0007			

ATTACHMENT TO HOST BEAM

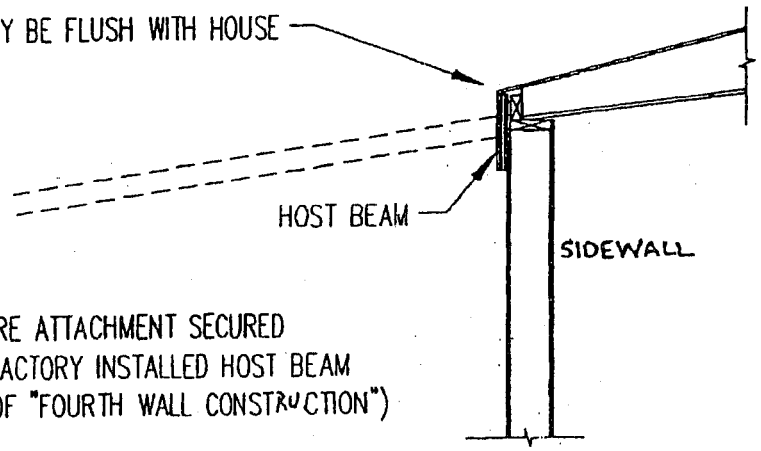

STRUCTURE ATTACHMENT SECURED
DIRECTLY TO FACTORY INSTALLED HOST BEAM
(THIS IS IN LIEU OF "FOURTH WALL CONSTRUCTION")

STRUCTURE ATTACHMENT INSTALLED ON-SITE
BY OTHERS AND MUST MEET LOCAL CODES

PERIMETER BLOCKING ON-SITE 48" O.C. MAX.

DESIGN MEETS FBC AND ASCE FOR 140MPH (3 SEC. GUSTS)
EXP. B LOADING FOR PARTIALLY ENCLOSED STRUCTURES

REF. PG. 07-0050, 07-0051

ALSO MEETS
WINDZONE III
EXPOSURE C
20 PSF ROOF
10 PSF D.L.

NDS01

REF. CALCS.

ENGINEER APPROVAL:

JOHN U. DUEDEN
CERTIFICATE
No. 0050464
1/11/07
STATE OF
FLORIDA
REGISTERED ENGINEER

DAPIA APPROVAL:

APPROVED BY
NTA INC.
Jan 20,2007
FEDERAL MANUFACTURED HOME
CONSTRUCTION AND SAFETY STANDARDS

NOTES:

1. HOST BEAM INSTALLATION IS FOR ON-SITE STRUCTURE ATTACHMENT:
   20' WIDE MAX. WIND ZONE 2 OR 120MPH EXP. B SITES,
   16' WIDE MAX. WIND ZONE 3 OR 140MPH EXP. B SITES
2. MIN. BRACKET LOAD CAPACITY FOR VERTICAL TIE-DOWNS IS
   2450# WIND ZONE 2, 2960# WIND ZONE 3
3. WALL FRAMING IS 2 X 6 SPF @ 16" O.C.
4. 48" O.C. PERIMETER BLOCKING REQUIRED ON HOST BEAM SIDE OF HOUSE

JACOBSEN HOMES
P.O. BOX 368
SAFETY HARBOR, FLORIDA 34695
PHONE (727) 726-1138

NOTICE:
THESE SPECIFICATIONS AND DRAWINGS ARE ORIGINAL, PROPRIETARY, AND CONFIDENTIAL MATERIALS OF JACOBSEN MANUFACTURING INC. SUCH MATERIALS ARE PROVIDED TO THE RECIPIENT FOR SPECIFIC PURPOSES AND MUST BE KEPT CONFIDENTIAL AND SECRET FROM OTHERS.

DRAWN BY: D.M.T.	DATE: 01-10-07	REV. LETTER: —
DRAWING TITLE: ATT. TO HOST BEAM		
DRAWING NUMBER: SU-01-0008		

BLOCKING FOR TEMPORARY SET

SINGLE WIDE UNIT

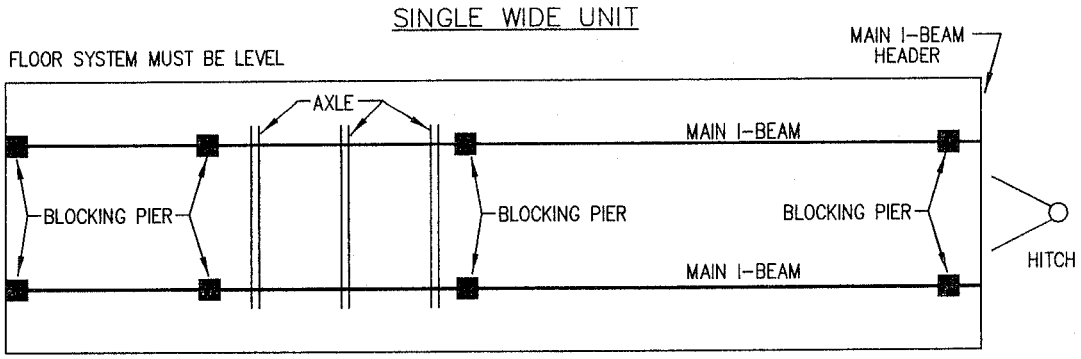

TEMPORARY BLOCKING IS REQUIRED ON HOMES LOCATED AT THE DEALERS LOT OR PARKED AT HOME SITE FOR ANY PERIOD OF TIME.

BLOCKING PIERS ARE TO BE LOCATED UNDER MAIN I-BEAM AT THE REAR, AT THE HITCH, IN BACK OF AND IN THE FRONT OF AXLE AREA.

MULTI-WIDE UNITS

BLOCK EACH UNIT OF MULTI-WIDE HOME IN SAME MANNER

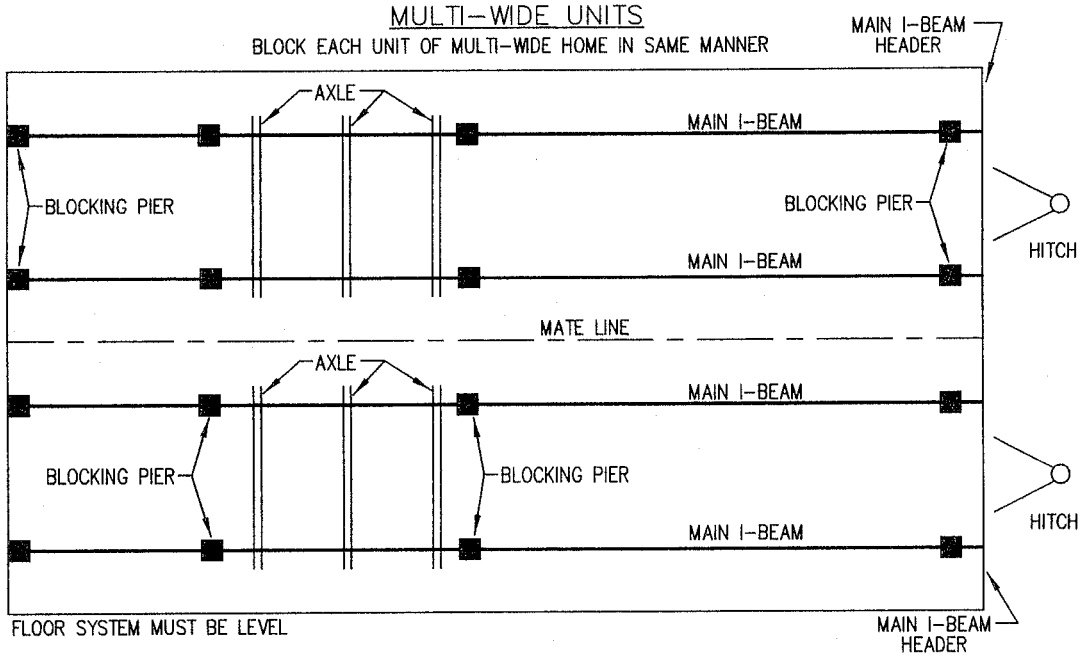

TEMPORARY BLOCKING IS REQUIRED ON HOMES LOCATED AT THE DEALERS LOT OR PARKED AT HOME SITE FOR ANY PERIOD OF TIME.

BLOCKING PIERS ARE TO BE LOCATED UNDER MAIN I-BEAM AT THE REAR, AT THE HITCH, IN BACK OF AND IN THE FRONT OF AXLE AREA.

15'-4" (184") WIDTH UNIT REQUIRES PERIMETER BLOCKING 96" O.C AT SIDEWALL AND MARRIAGE WALL.

JACOBSEN HOMES

P.O. BOX 368
SAFETY HARBOR, FLORIDA 34695
PHONE (727) 726-1138

NOTICE:
THESE SPECIFICATIONS AND DRAWINGS ARE ORIGINAL, PROPRIETARY, AND CONFIDENTIAL MATERIALS OF JACOBSEN MANUFACTURING INC. SUCH MATERIALS ARE PROVIDED TO THE RECIPIENT FOR SPECIFIC PURPOSES AND MUST BE KEPT CONFIDENTIAL AND SECRET FROM OTHERS.

DRAWN BY: D.M.T.	DATE: 10-10-08	REV. LETTER: —
DRAWING TITLE: TEMP. BLOCKING		
DRAWING NUMBER: SU-01-0009		

BLOCKING NOTE

HORIZONTAL OFFSETS FROM THE TOP TO THE BOTTOM OF THE PIER MUST NOT EXCEED 1/2". (THIS APPLIES TO ALL BLOCKING.)

JACOBSEN HOMES
P.O. BOX 368
SAFETY HARBOR, FLORIDA 34695
PHONE (727) 726-1138

NOTICE:
THESE SPECIFICATIONS AND DRAWINGS ARE ORIGINAL, PROPRIETARY, AND CONFIDENTIAL MATERIALS OF JACOBSEN MANUFACTURING INC. SUCH MATERIALS ARE PROVIDED TO THE RECIPIENT FOR SPECIFIC PURPOSES AND MUST BE KEPT CONFIDENTIAL AND SECRET FROM OTHERS.

DRAWN BY: O.A.	DATE: 10-17-08	REV. LETTER: —
DRAWING TITLE: BLOCKING NOTE		
DRAWING NUMBER: SU-01-0010		

16" X 16" PIER FOOTER SPACINGS*

MAXIMUM I-BEAM PIER SPACING

FLOOR WIDTH	MAXIMUM PIER SPACING (SOIL BEARING CAPACITY)					
	1000 (PSF)	1500 (PSF)	2000 (PSF)	2500 (PSF)	3000 (PSF)	3500 (PSF)
120" WIDE FLOOR	39"	62"	86"	110"	134"	157"
144" WIDE FLOOR	33"	53"	73"	93"	113"	133"
160" WIDE FLOOR	30"	48"	66"	85"	103"	121"
184" WIDE FLOOR	26"	42"	58"	74"	90"	107"
MIN. PIER CAPACITY	1778 LBS.	2667 LBS.	3556 LBS.	4444 LBS.	5333 LBS.	6222 LBS.

NOTE: ALL UNIT WIDTHS INCLUDES A 6" OVERHANG ON BOTH SIDES MAXIMUM.

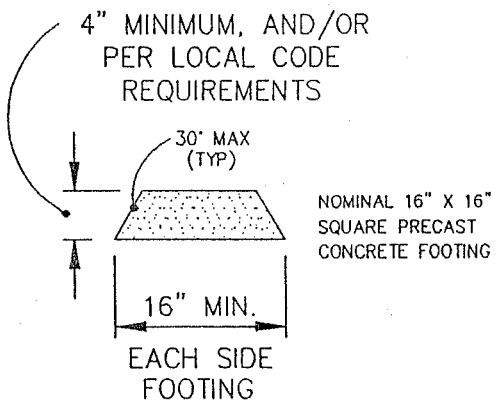

TYPICAL PIER FOOTER

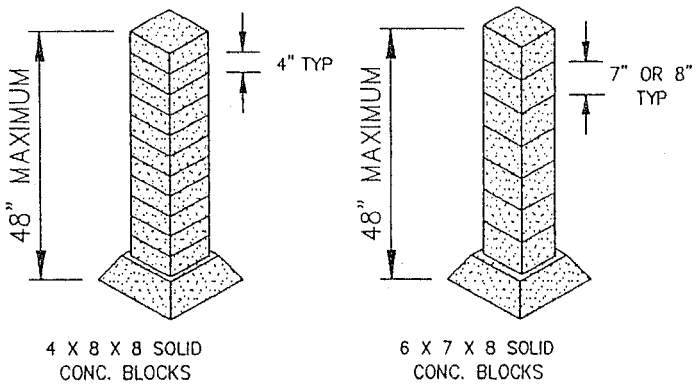

TYPICAL PIER CONFIGURATIONS
(THE CAPACITY OF THESE PIERS EXCEEDS MIN. REQUIRED)

CONCRETE NOTES

1. ALL FOOTINGS CONCRETE TO HAVE fc' = 3000 PSI MIN AT 28 DAYS;
2. ALL SOLID CONCRETE BLOCKS TO HAVE fm' = 1500 PSI MIN;
3. CENTER ALL PIERS ON FOOTINGS

WINDZONE III
(110 MPH)
ALL EXPOSURES
20 PSF ROOF
10 PSF D.L.

REF. CALCS. CWA-95.01 -95.02

ENGINEER APPROVAL: GARY STILWELL REGISTERED No. 910334 STATE OF INDIANA PROFESSIONAL ENGINEER 2/10/99

DAPIA APPROVAL: APPROVED BY NTA INC. FEDERAL MANUFACTURED HOME CONSTRUCTION AND SAFETY STANDARDS MAR 01 1999

NOTES:

1. REFER TO OTHER DETAILS FOR ADDITIONAL PIER FOOTER SIZES AND SPACINGS.
2. START I-BEAM PIER SPACING 1/2 THE ALLOWABLE SPACING FROM EACH END OF THE HOME AT EACH I-BEAM, AND MAXIMUM SPACING SHOWN IN THE CHART ABOVE FOR FULL LENGTH OF HOME.
3. SEE OTHER DETAILS FOR PIER REQUIREMENTS AND MAXIMUM OPENINGS AT MATING LINE OF MULTIPLE WIDE HOMES.
4. SEE OTHER DETAILS FOR TIE-DOWN REQUIREMENTS.

JACOBSEN HOMES
P.O. BOX 368
SAFETY HARBOR, FLORIDA 34695
PHONE (727) 726-1138

NOTICE: THESE SPECIFICATIONS AND DRAWINGS ARE ORIGINAL, PROPRIETARY, AND CONFIDENTIAL MATERIALS OF JACOBSEN MANUFACTURING INC. SUCH MATERIALS ARE PROVIDED TO THE RECIPIENT FOR SPECIFIC PURPOSES AND MUST BE KEPT CONFIDENTIAL AND SECRET FROM OTHERS.

DRAWN BY: M.T.	DATE: 2-8-99	REV. LETTER: B
DRAWING TITLE: 16" x 16" PIER SPACING		
DRAWING NUMBER: SU-01-0020		

ALTERNATE MAIN BEAM PIERS

(8" x 8" x 16" HOLLOW CONCRETE MASONRY BLOCKS)
(NO MORTAR OR GROUT REQUIRED)

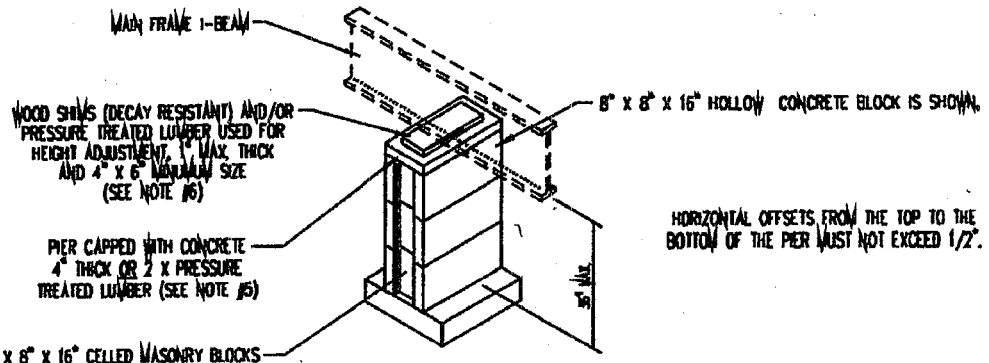

SINGLE STACK BLOCK PIER

(PERPENDICULAR TO MAIN BEAM)
8,000 LBS. MAX. CAPACITY-SEE NOTE #1

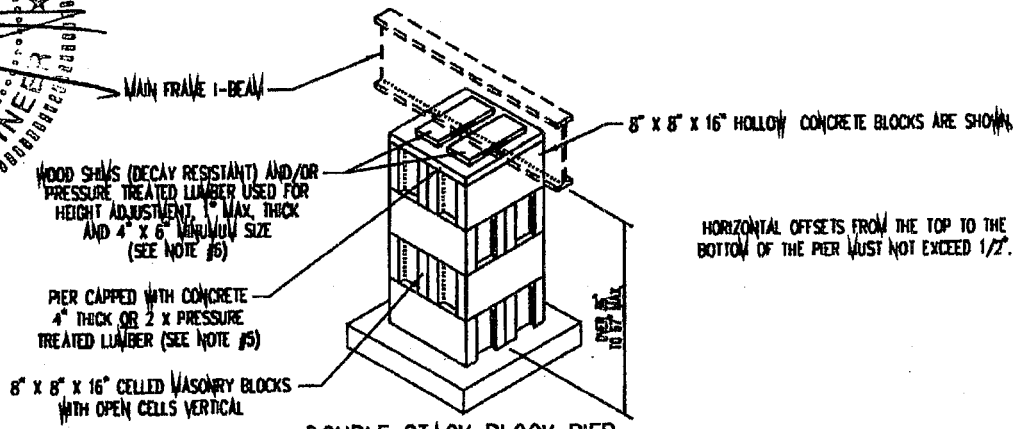

DOUBLE STACK BLOCK PIER

16,000 LBS. CAPACITY
(SEE NOTE #1 & #2)

JOHN C. DOEDEN
LICENSE
No 45484
10/15/08
STATE OF
FLORIDA
PROFESSIONAL ENGINEER

FLOOR WIDTH MAX.	MAXIMUM I-BEAM PIER SPACING (CONTROLLED BY PIER LOAD CAPACITIES)			
	48" O.C.	72" O.C.	96" O.C.	120" O.C.
144" WIDE FLOOR	2428 LBS.	3488 LBS.	4548 LBS.	5608 LBS.
160" WIDE FLOOR	2661 LBS.	3838 LBS.	5014 LBS.	6191 LBS.
184" WIDE FLOOR	2961 LBS.	4288 LBS.	5615 LBS.	6941 LBS.

PIER LOADS INCLUDE WEIGHT OF PIER UP TO 250# – ADD DIFFERENCE WHEN PIER WEIGHT IS GREATER.

WINDZONE III
(110 MPH)
ALL EXPOSURES
20 PSF ROOF
10 PSF D.L.

NOTE: UNIT WIDTHS INCLUDES A 6" OVERHANG ON BOTH SIDES MAXIMUM.
(CHECK PIER PAD LOAD CAPACITIES BASED ON SOIL BEARING PSF)

REF. CALCS.

ENGINEER APPROVAL:

DAPIA APPROVAL:

APPROVED BY
NTA INC.
Revised
Oct 17,2008
FEDERAL MANUFACTURED HOME CONSTRUCTION AND SAFETY STANDARDS

NOTES:

1. SEE SU-01-0020 FOR PIER SPACING WHEN USING 16" X 16" PIER PADS. WHEN USING 16" X 16" MIN. PIER PADS OTHER THAN CONCRETE THEY MUST BE LISTED AND CERTIFIED TO EXCEED OR BE EQUAL IN MIN. PIER CAPACITY.
2. WHEN USING PIER PADS THEY MUST BE LISTED & CERTIFIED TO EXCEED OR EQUAL MIN. PIER CAPACITY.
3. START I-BEAM PIER SPACING 24" FROM EACH END OF THE HOME AT EACH I-BEAM AND MAXIMUM SPACING SHOWN IN THE CHART ABOVE FOR FULL LENGTH OF HOME.
4. ANY PIER HEIGHTS ABOVE 67" MUST BE DESIGNED BY A P.E. OR ARCHITECT.
5. CAPS MUST BE SAME LENGTH AND WIDTH AS THE PIERS ON WHICH THEY REST.
6. HARDWOOD PLATES NO THICKER THAN 1 1/2" OR 2 OR 4 INCH NOMINAL SOLID CONCRETE BLOCK MAY BE USED TO FILL ANY REMAINING VERTICAL GAPS.

JACOBSEN HOMES
P.O. BOX 368
SAFETY HARBOR, FLORIDA 34695
PHONE (727) 726-1138

NOTICE:
THESE SPECIFICATIONS AND DRAWINGS ARE ORIGINAL, PROPRIETARY, AND CONFIDENTIAL MATERIALS OF JACOBSEN MANUFACTURING INC. SUCH MATERIALS ARE PROVIDED TO THE RECIPIENT FOR SPECIFIC PURPOSES AND MUST BE KEPT CONFIDENTIAL AND SECRET FROM OTHERS.

DRAWN BY: O.A.	DATE: 2-8-99		REV. LETTER: B
DRAWING TITLE: ALT. MAIN BEAM PIERS			(10-08-08)
DRAWING NUMBER: SU-01-0021			

MINIMUM HOME SET HEIGHT

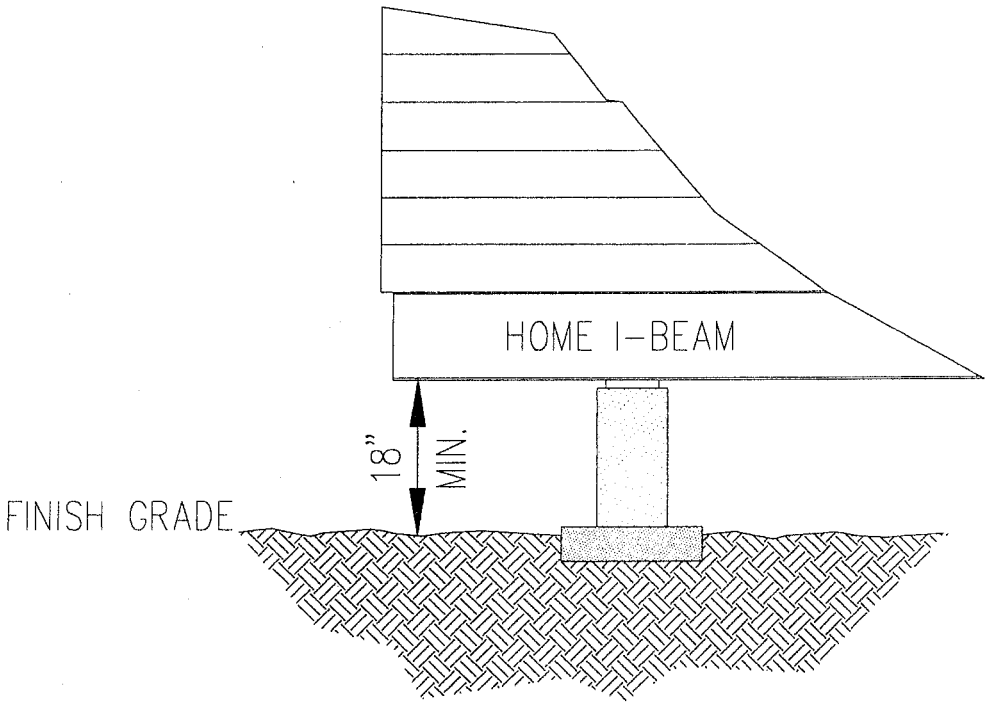

NOTES:

WHERE THE GRADE IS SLOPED, 25% OF THE LOWEST MEMBER OF THE MAIN FRAME MAY BE SET BELOW 18"; HOWEVER, UNDER NO CIRCUMSTANCES MAY THE BOTTOM OF THE I-BEAM BE SET BELOW 12" FROM THE FINISHED GRADE.

JACOBSEN HOMES
P.O. BOX 368
SAFETY HARBOR, FLORIDA 34695
PHONE (727) 726-1138

NOTICE:
THESE SPECIFICATIONS AND DRAWINGS ARE ORIGINAL, PROPRIETARY, AND CONFIDENTIAL MATERIALS OF JACOBSEN MANUFACTURING INC. SUCH MATERIALS ARE PROVIDED TO THE RECIPIENT FOR SPECIFIC PURPOSES AND MUST BE KEPT CONFIDENTIAL AND SECRET FROM OTHERS.

DRAWN BY: B.E.M.	DATE: 2-11-99	REV. LETTER:
DRAWING TITLE: MIN. HOME SET HEIGHT		
DRAWING NUMBER: SU-01-0022		

16" X 16" PIER FOOTER SPACINGS*
(MIN. 256 SQ.IN)

MAXIMUM I-BEAM PIER SPACING

FLOOR WIDTH	MAXIMUM PIER SPACING (SOIL BEARING CAPACITY)					
	1000 (PSF)	1500 (PSF)	2000 (PSF)	2500 (PSF)	3000 (PSF)	3500 (PSF)
120" WIDE FLOOR**	39"	62 1/2"	86 1/2"	110"	SEE NOTE #4	SEE NOTE #4
144" WIDE FLOOR**	33"	53"	73 1/2"	93 1/2"	113 1/2"	SEE NOTE #4
160" WIDE FLOOR**	30"	48 1/2"	66 1/2"	85"	103"	SEE NOTE #4
184" WIDE FLOOR**	26 1/2"	42 1/2"	58 1/2"	74 1/2"	90 1/2"	107"
MIN. PIER CAPACITY	1778 LBS	2667 LBS	3556 LBS	4444 LBS	5333 LBS	6222 LBS

18 1/2" X 18 1/2" PIER FOOTER SPACINGS*
(MIN. 342 1/4 SQ.IN)

MAXIMUM I-BEAM PIER SPACING

FLOOR WIDTH	MAXIMUM PIER SPACING (SOIL BEARING CAPACITY)					
	1000 (PSF)	1500 (PSF)	2000 (PSF)	2500 (PSF)	3000 (PSF)	3500 (PSF)
120" WIDE FLOOR**	54 1/2"	86"	117 1/2"	SEE NOTE #4	SEE NOTE #4	SEE NOTE #4
144" WIDE FLOOR**	46"	73"	100"	SEE NOTE #4	SEE NOTE #4	SEE NOTE #4
160" WIDE FLOOR**	42"	66 1/2"	90 1/2	115"	SEE NOTE #4	SEE NOTE #4
184" WIDE FLOOR**	37"	58 1/2"	79 1/2"	101"	SEE NOTE #4	SEE NOTE #4
MIN. PIER CAPACITY	2377 LBS.	3565 LBS.	4753 LBS.	5942 LBS.	7130 LBS.	8319 LBS.

NOTE: UNIT WIDTHS WITH ** INCLUDES A 6" OVERHANG ON BOTH SIDES MAXIMUM.

FOR TYPICAL PIERS SEE PAGE SU-01-0021

10/3/01

NOTES:

1. PRE-FABRICATED PIER PADS MAY BE USED AS AN ALTERNATE TO THE CONCRETE FOOTINGS SPECIFIED IN THE JACOBSEN HOMES SET-UP MANUAL.
2. THE PRE-FABRICATED PIER PADS ARE TO BE INSTALLED PER THE MANUFACTURERS INSTALLATION INSTRUCTIONS AND MEET THE MINIMUM PIER CAPACITIES SHOWN ABOVE.
3. ALL OTHER REQUIREMENTS ARE TO BE ADHERED TO AS SPECIFIED IN THE JACOBSEN HOMES INSTALLATION INSTRUCTIONS.
4. MAX. PIER SPACING 8' FOR UNITS WITH 8" I-BEAMS / 10' FOR UNITS WITH 10" OR 12" I-BEAMS (24" MAX. FROM ENDS).

ENGINEER APPROVAL: No. 910334 STATE OF INDIANA PROFESSIONAL ENGINEER

DAPIA APPROVAL: (SEE CALCS. (C-TY- 14.01)
APPROVED BY NIA INC. OCT 11 2001
FEDERAL MANUFACTURED HOME CONSTRUCTION AND SAFETY STANDARDS

JACOBSEN HOMES
P.O. BOX 368
SAFETY HARBOR, FLORIDA 34695
PHONE (813) 726-1138

NOTICE:
THESE SPECIFICATIONS AND DRAWINGS ARE ORIGINAL, PROPRIETARY, AND CONFIDENTIAL MATERIALS OF JACOBSEN MANUFACTURING INC. SUCH MATERIALS ARE PROVIDED TO THE RECIPIENT FOR SPECIFIC PURPOSES AND MUST BE KEPT CONFIDENTIAL AND SECRET FROM OTHERS.

DRAWN BY: D.M.T.	DATE: 09-22-01	REV. LETTER: —
DRAWING TITLE: PRE-FAB. 16" & 18 1/2" PIER PAD SPACING		
DRAWING NUMBER: SU-01-0023		

18" X 22" PIER FOOTER SPACINGS*
(MIN. 396 SQ.IN)

MAXIMUM I-BEAM PIER SPACING

FLOOR WIDTH	MAXIMUM PIER SPACING (SOIL BEARING CAPACITY)					
	1000 (PSF)	1500 (PSF)	2000 (PSF)	2500 (PSF)	3000 (PSF)	3500 (PSF)
120" WIDE FLOOR**	63 1/2"	100 1/2"	SEE NOTE #4	SEE NOTE #4	SEE NOTE #4	SEE NOTE #4
144" WIDE FLOOR**	54"	85"	116 1/2"	SEE NOTE #4	SEE NOTE #4	SEE NOTE #4
160" WIDE FLOOR**	49"	77 1/2"	105 1/2"	SEE NOTE #4	SEE NOTE #4	SEE NOTE #4
184" WIDE FLOOR**	43"	68"	93"	117 1/2"	SEE NOTE #4	SEE NOTE #4
MIN. PIER CAPACITY	2747 LBS	4121 LBS	5495 LBS	6868 LBS	8242 LBS	9616 LBS

20" X 20" PIER FOOTER SPACINGS*
(MIN. 400 SQ.IN)

MAXIMUM I-BEAM PIER SPACING

FLOOR WIDTH	MAXIMUM PIER SPACING (SOIL BEARING CAPACITY)					
	1000 (PSF)	1500 (PSF)	2000 (PSF)	2500 (PSF)	3000 (PSF)	3500 (PSF)
120" WIDE FLOOR**	64 1/2"	101 1/2"	SEE NOTE #4	SEE NOTE #4	SEE NOTE #4	SEE NOTE #4
144" WIDE FLOOR**	54 1/2"	86"	117 1/2"	SEE NOTE #4	SEE NOTE #4	SEE NOTE #4
160" WIDE FLOOR**	49 1/2"	78 1/2"	107"	SEE NOTE #4	SEE NOTE #4	SEE NOTE #4
184" WIDE FLOOR**	43 1/2"	69"	94"	119"	SEE NOTE #4	SEE NOTE #4
MIN. PIER CAPACITY	2778 LBS.	4167 LBS.	5556 LBS.	6944 LBS.	8333 LBS.	9722 LBS.

NOTE: UNIT WIDTHS WITH ** INCLUDES A 6" OVERHANG ON BOTH SIDES MAXIMUM.

FOR TYPICAL PIERS SEE PAGE SU-01-0021

NOTES:

1. PRE-FABRICATED PIER PADS MAY BE USED AS AN ALTERNATE TO THE CONCRETE FOOTINGS SPECIFIED IN THE JACOBSEN HOMES SET-UP MANUAL.
2. THE PRE-FABRICATED PIER PADS ARE TO BE INSTALLED PER THE MANUFACTURERS INSTALLATION INSTRUCTIONS AND MEET THE MINIMUM PIER CAPACITIES SHOWN ABOVE.
3. ALL OTHER REQUIREMENTS ARE TO BE ADHERED TO AS SPECIFIED IN THE JACOBSEN HOMES INSTALLATION INSTRUCTIONS.
4. MAX. PIER SPACING 8' FOR UNITS WITH 8" I-BEAMS / 10' FOR UNITS WITH 10" OR 12" I-BEAMS (24" MAX. FROM ENDS).

ENGINEER APPROVAL: 10/3/01
GARY L. STILWELL REGISTERED No. 910334 STATE OF INDIANA PROFESSIONAL ENGINEER

DAPIA APPROVAL: (SEE CALC. PG. C-TY-14.02)
APPROVED BY NIA INC. OCT 11 2001
FEDERAL MANUFACTURED HOME CONSTRUCTION AND SAFETY STANDARDS

JACOBSEN HOMES
P.O. BOX 368
SAFETY HARBOR, FLORIDA 34695
PHONE (813) 726-1138

NOTICE:
THESE SPECIFICATIONS AND DRAWINGS ARE ORIGINAL, PROPRIETARY, AND CONFIDENTIAL MATERIALS OF JACOBSEN MANUFACTURING INC. SUCH MATERIALS ARE PROVIDED TO THE RECIPIENT FOR SPECIFIC PURPOSES AND MUST BE KEPT CONFIDENTIAL AND SECRET FROM OTHERS.

DRAWN BY: D.M.T.	DATE: 09-22-01	REV. LETTER: —
DRAWING TITLE: PRE-FAB. 18" X 22" & 20" PIER PAD SPACING		
DRAWING NUMBER: SU-01-0024		

17 3/16" X 25 3/16" PIER FOOTER SPACINGS*
(MIN. 432 7/8 SQ.IN)

MAXIMUM I-BEAM PIER SPACING

FLOOR WIDTH	MAXIMUM PIER SPACING (SOIL BEARING CAPACITY)					
	1000 (PSF)	1500 (PSF)	2000 (PSF)	2500 (PSF)	3000 (PSF)	3500 (PSF)
120" WIDE FLOOR**	70 1/2"	110 1/2"	SEE NOTE #4	SEE NOTE #4	SEE NOTE #4	SEE NOTE #4
144" WIDE FLOOR**	59 1/2"	93 1/2"	SEE NOTE #4	SEE NOTE #4	SEE NOTE #4	SEE NOTE #4
160" WIDE FLOOR**	54"	85"	116"	SEE NOTE #4	SEE NOTE #4	SEE NOTE #4
184" WIDE FLOOR**	47 1/2"	75"	102"	SEE NOTE #4	SEE NOTE #4	SEE NOTE #4
MIN. PIER CAPACITY	3004 LBS.	4507 LBS.	6009 LBS.	7511 LBS.	9013 LBS.	10,516 LBS.

24" X 24" PIER FOOTER SPACINGS*
(MIN. 576 SQ.IN)

MAXIMUM I-BEAM PIER SPACING

FLOOR WIDTH	MAXIMUM PIER SPACING (SOIL BEARING CAPACITY)					
	1000 (PSF)	1500 (PSF)	2000 (PSF)	2500 (PSF)	3000 (PSF)	3500 (PSF)
120" WIDE FLOOR**	95 1/2"	SEE NOTE #4	SEE NOTE #4	SEE NOTE #4	SEE NOTE #4	SEE NOTE #4
144" WIDE FLOOR**	81"	SEE NOTE #4	SEE NOTE #4	SEE NOTE #4	SEE NOTE #4	SEE NOTE #4
160" WIDE FLOOR**	74"	115"	SEE NOTE #4	SEE NOTE #4	SEE NOTE #4	SEE NOTE #4
184" WIDE FLOOR**	65"	101"	SEE NOTE #4	SEE NOTE #4	SEE NOTE #4	SEE NOTE #4
MIN. PIER CAPACITY	4000 LBS	6000 LBS	8000 LBS.	10,000 LBS.	12,000 LBS.	14,000 LBS.

NOTE: UNIT WIDTHS WITH ** INCLUDES A 6" OVERHANG ON BOTH SIDES MAXIMUM.

FOR TYPICAL PIERS SEE PAGE SU-01-0021

NOTES:

1. PRE-FABRICATED PIER PADS MAY BE USED AS AN ALTERNATE TO THE CONCRETE FOOTINGS SPECIFIED IN THE JACOBSEN HOMES SET-UP MANUAL.
2. THE PRE-FABRICATED PIER PADS ARE TO BE INSTALLED PER THE MANUFACTURERS INSTALLATION INSTRUCTIONS AND MEET THE MINIMUM PIER CAPACITIES SHOWN ABOVE.
3. ALL OTHER REQUIREMENTS ARE TO BE ADHERED TO AS SPECIFIED IN THE JACOBSEN HOMES INSTALLATION INSTRUCTIONS.
4. MAX. PIER SPACING 8' FOR UNITS WITH 8" I-BEAMS / 10' FOR UNITS WITH 10" OR 12" I-BEAMS (24" MAX. FROM ENDS).

ENGINEER APPROVAL: 10/2/01

GARY C. HILL REGISTERED No. 910334 STATE OF INDIANA PROFESSIONAL ENGINEER

DAPIA APPROVAL: (SEE CALCS. PG. CTY-14.03-14.06)

APPROVED BY NIA INC. OCT 11 2001

FEDERAL MANUFACTURED HOME CONSTRUCTION AND SAFETY STANDARDS

JACOBSEN HOMES
P.O. BOX 368
SAFETY HARBOR, FLORIDA 34695
PHONE (813) 726-1138

NOTICE:
THESE SPECIFICATIONS AND DRAWINGS ARE ORIGINAL, PROPRIETARY, AND CONFIDENTIAL MATERIALS OF JACOBSEN MANUFACTURING INC. SUCH MATERIALS ARE PROVIDED TO THE RECIPIENT FOR SPECIFIC PURPOSES AND MUST BE KEPT CONFIDENTIAL AND SECRET FROM OTHERS.

DRAWN BY: D.M.T.	DATE: 09-22-01	REV. LETTER: —
DRAWING TITLE: PRE-FAB. 17 X 25 & 24" PIER PAD SPACING		
DRAWING NUMBER: SU-01-0025		

26" X 26" PIER FOOTER SPACINGS*
(MIN. 676 SQ.IN)

MAXIMUM I-BEAM PIER SPACING

FLOOR WIDTH	MAXIMUM PIER SPACING (SOIL BEARING CAPACITY)					
	1000 (PSF)	1500 (PSF)	2000 (PSF)	2500 (PSF)	3000 (PSF)	3500 (PSF)
120" WIDE FLOOR**	113 1/2"	SEE NOTE #4	SEE NOTE #4	SEE NOTE #4	SEE NOTE #4	SEE NOTE #4
144" WIDE FLOOR**	96 1/2"	SEE NOTE #4	SEE NOTE #4	SEE NOTE #4	SEE NOTE #4	SEE NOTE #4
160" WIDE FLOOR**	87 1/2"	SEE NOTE #4	SEE NOTE #4	SEE NOTE #4	SEE NOTE #4	SEE NOTE #4
184" WIDE FLOOR**	77"	119 1/2"	SEE NOTE #4	SEE NOTE #4	SEE NOTE #4	SEE NOTE #4
MIN. PIER CAPACITY	4694 LBS.	7042 LBS.	9389 LBS.	11,736 LBS.	14,083 LBS.	16,431

NOTE: UNIT WIDTHS WITH ** INCLUDES A 6" OVERHANG ON BOTH SIDES MAXIMUM.

FOR TYPICAL PIERS SEE PAGE SU-01-0021

NOTES:

1. PRE-FABRICATED PIER PADS MAY BE USED AS AN ALTERNATE TO THE CONCRETE FOOTINGS SPECIFIED IN THE JACOBSEN HOMES SET-UP MANUAL.
2. THE PRE-FABRICATED PIER PADS ARE TO BE INSTALLED PER THE MANUFACTURERS INSTALLATION INSTRUCTIONS AND MEET THE MINIMUM PIER CAPACITIES SHOWN ABOVE.
3. ALL OTHER REQUIREMENTS ARE TO BE ADHERED TO AS SPECIFIED IN THE JACOBSEN HOMES INSTALLATION INSTRUCTIONS.
4. MAX. PIER SPACING 8' FOR UNITS WITH 8" I-BEAMS / 10' FOR UNITS WITH 10" OR 12" I-BEAMS (24" MAX. FROM ENDS).

ENGINEER APPROVAL: 10/3/01
GARY L. MARTIN REGISTERED No. 910334 STATE OF INDIANA PROFESSIONAL ENGINEER
SIGNATURE

DAPIA APPROVAL: (SEE CALC. PG. C-TY-14.07)
APPROVED BY NIA INC. FEDERAL MANUFACTURED HOME CONSTRUCTION AND SAFETY STANDARDS
OCT 11 2001

JACOBSEN HOMES
P.O. BOX 368
SAFETY HARBOR, FLORIDA 34695
PHONE (813) 726-1138

NOTICE:
THESE SPECIFICATIONS AND DRAWINGS ARE ORIGINAL, PROPRIETARY, AND CONFIDENTIAL MATERIALS OF JACOBSEN MANUFACTURING INC. SUCH MATERIALS ARE PROVIDED TO THE RECIPIENT FOR SPECIFIC PURPOSES AND MUST BE KEPT CONFIDENTIAL AND SECRET FROM OTHERS.

DRAWN BY: D.M.T.
DATE: 09-22-01
REV. LETTER: —
DRAWING TITLE: PRE-FAB. 26" PIER PAD SPACING
DRAWING NUMBER: SU-01-0026

PIER FOOTER SIZING CHART FOR MARRIAGE WALL OPENINGS (1)

(FOR SIDEWALL OPENINGS SEE NOTE (3))

24' WIDE

SOIL BEARING CAPACITY PSF	LOAD SPANS (4) 8'–12'	12'–16'	16'–20'	20'–24'	24'–28'	28'–32'
1000	390 sq. in.	494 sq. in.	597 sq. in.	701 sq. in.	805 sq. in.	908 sq. in.
1500	260 sq. in.	329 sq. in.	398 sq. in.	467 sq. in.	536 sq. in.	606 sq. in.
2000	195 sq. in.	247 sq. in.	299 sq. in.	351 sq. in.	402 sq. in.	454 sq. in.
2500	156 sq. in.	197 sq. in.	239 sq. in.	280 sq. in.	322 sq. in.	363 sq. in.
MIN. PIER CAP.	2708 lbs.	3428 lbs.	4148 lbs.	4868 lbs.	5588 lbs.	6308 lbs.

25'–4" WIDE

SOIL BEARING CAPACITY PSF	LOAD SPANS (4) 8'–12'	12'–16'	16'–20'	20'–24'	24'–28'	28'–32'
1000	409 sq. in.	519 sq. in.	628 sq. in.	737 sq. in.	847 sq. in.	956 sq. in.
1500	273 sq. in.	346 sq. in.	419 sq. in.	492 sq. in.	565 sq. in.	638 sq. in.
2000	205 sq. in.	259 sq. in.	314 sq. in.	369 sq. in.	423 sq. in.	478 sq. in
2500	164 sq. in.	207 sq. in.	251 sq. in.	295 sq. in.	339 sq. in.	383 sq. in
MIN. PIER CAP.	2841 lbs.	3601 lbs.	4361 lbs.	5121 lbs.	5881 lbs.	6641 lbs.

26'–8" WIDE

SOIL BEARING CAPACITY PSF	LOAD SPANS (4) 8'–12'	12'–16'	16'–20'	20'–24'	24'–28'	28'–32'
1000	428 sq. in.	544 sq. in.	659 sq. in.	774 sq. in.	889 sq. in.	1004 sq. in.
1500	286 sq. in.	362 sq. in	439 sq. in.	516 sq. in.	593 sq. in.	670 sq. in.
2000	214 sq. in.	272 sq. in.	329 sq. in.	387 sq. in.	445 sq. in.	502 sq. in.
2500	171 sq. in.	217 sq. in.	264 sq. in.	310 sq. in.	356 sq. in.	402 sq. in.
MIN. PIER CAP.	2975 lbs	3775 lbs	4575 lbs	5375 lbs	6175 lbs	6975 lbs

30'–8" WIDE

SOIL BEARING CAPACITY PSF	LOAD SPANS (4) 8'–12'	12'–16'	16'–20'	20'–24'	24'–28'	28'–32'
1000	486 sq. in.	618 sq. in.	751 sq. in.	883 sq. in.	1016 sq. in.	1148 sq. in.
1500	324 sq. in.	412 sq. in.	501 sq. in.	589 sq. in.	677 sq. in.	766 sq. in.
2000	243 sq. in.	309 sq. in.	375 sq. in.	442 sq. in.	508 sq. in.	574 sq. in.
2500	194 sq. in.	247 sq. in.	300 sq. in.	353 sq. in.	406 sq. in.	459 sq. in.
MIN. PIER CAP.	3375 lbs	4295 lbs	5215 lbs	6135 lbs	7055 lbs	7975 lbs

WINDZONE III
(110 MPH)
ALL EXPOSURES
20 PSF ROOF
10 PSF D.L.

NOTES:

(1) SEE DETAIL 'B', PAGE SU-01-0001 FOR BLOCKING AND ANCHORING OF MARRIAGE WALL OPENINGS WIDER THAN 49 INCHES.

(2) SEE NOTES: (2), (3), AND (4) UNDER TABLE I, PAGE SU-01-0040.

(3) FOR ALL UNIT WIDTHS, USE 177 sq/in PIER FOOTER UNDER SIDEWALL OPENINGS THAT ARE 49 INCHES TO 96 INCHES WIDE. FOR OPENINGS THAT ARE 96 INCHES TO 144 INCHES, USE 242 sq/in PIER FOOTER UNDER SIDEWALL OPENINGS. (MIN. 1000 PSF SOIL BEARING REQ'D)

(4) FOR PROPER LOAD SPANS, SEE SU-03-0001. ("LOAD SPANS" ARE CLEARSPANS; PIER SPECIFICATIONS ABOVE ASSUME CLEARSPAN OCCURS ON ONE SIDE OF PIER ONLY – IF CLEARSPAN OCCURS ON BOTH SIDES, ADD VALUES LISTED ABOVE FOR EACH CLEARSPAN)

(5) CHECK WITH LOCAL JURISDICTION TO DETERMINE THE SOIL VALUE ON YOUR SITE OR HAVE A SOIL BEARING TEST PERFORMED ON YOUR SOIL TO DETERMINE THE VALUE.

REF. CALCS.

ENGINEER APPROVAL: GARY L. STILWELL REGISTERED No. 910334 STATE OF INDIANA PROFESSIONAL ENGINEER 4/10/99

DAPIA APPROVAL:

APPROVED BY NTA INC.
FEDERAL MANUFACTURED HOME CONSTRUCTION AND SAFETY STANDARDS
MAR 0 1 1999

JACOBSEN HOMES
P.O. BOX 368
SAFETY HARBOR, FLORIDA 34695
PHONE (727) 726-1138

NOTICE:
THESE SPECIFICATIONS AND DRAWINGS ARE ORIGINAL, PROPRIETARY, AND CONFIDENTIAL MATERIALS OF JACOBSEN MANUFACTURING INC. SUCH MATERIALS ARE PROVIDED TO THE RECIPIENT FOR SPECIFIC PURPOSES AND MUST BE KEPT CONFIDENTIAL AND SECRET FROM OTHERS.

DRAWN BY:	DATE:	REV. LETTER:
B.E.M.	2-6-99	A

DRAWING TITLE: PIER FOOTER SIZING CHART FOR MARR. WALL OPENINGS

DRAWING NUMBER: SU-01-0030

TABLE I

PIER FOOTER SIZING AND PIER SPACING CHART

(SEE NOTES BELOW)

12-WIDE WIDTH MAXIMUM (1) (5)

PIER SPACING	SOIL BEARING PSF CAPACITY (2) (6)	REQUIRED PIER FOOTER AREA, SQ. IN. (4)
3'-0" MAXIMUM FROM EACH END AND 8'-0" ON CENTER MAXIMUM (MINIMUM PIER CAPACITY 4548#)	1000 1500 2000 2500	655 437 327 262
4'-0" MAXIMUM FROM EACH END AND 10'-0" ON CENTER MAXIMUM (MINIMUM PIER CAPACITY 5608#)	1000 1500 2000 2500	808 538 404 323

13'-4"-WIDE WIDTH MAXIMUM (1) (5)

PIER SPACING	SOIL BEARING PSF CAPACITY (2) (6)	REQUIRED PIER FOOTER AREA, SQ. IN. (4)
3'-0" MAXIMUM FROM EACH END AND 8'-0" ON CENTER MAXIMUM (MINIMUM PIER CAPACITY 5014#)	1000 1500 2000 2500	716 478 358 287
4'-0" MAXIMUM FROM EACH END AND 10'-0" ON CENTER MAXIMUM (MINIMUM PIER CAPACITY 6191#)	1000 1500 2000 2500	884 590 442 354

15'-4"-WIDE WIDTH MAXIMUM (5)

PIER SPACING	SOIL BEARING PSF CAPACITY (2) (6)	REQUIRED PIER FOOTER AREA, SQ. IN. (4)
3'-0" MAXIMUM FROM EACH END AND 8'-0" ON CENTER MAXIMUM (MINIMUM PIER CAPACITY 5615#)	1000 1500 2000 2500	807 539 404 323
4'-0" MAXIMUM FROM EACH END AND 10'-0" ON CENTER MAXIMUM (MINIMUM PIER CAPACITY 6941#)	1000 1500 2000 2500	1000 666 500 400

ALL ZONES
ALL EXPOSURES
20 PSF ROOF
10 PSF D.L.

NOTES:

(1) ON MULTIPLE SECTION HOUSES, CHECK EACH SECTION INDIVIDUALLY.

(2) UNDISTURBED SOIL OR 90% COMPACTION FOR FILL.

(3) ALL FOOTERS TO BE BELOW FROST LINE.

(4) MORE THAN ONE PIER MAY BE USED TO ACHIEVE THE MINIMUM SQUARE INCHES REQUIRED.

(5) ALL UNIT WIDTHS TO INCLUDE 6" SIDE OVERHANG ONE SIDE OR ONE 3" OVERHANG ON EACH SIDE MAXIMUM.

(6) CHECK WITH LOCAL JURISDICTION TO DETERMINE THE SOIL VALUE ON YOUR SITE OR HAVE A SOIL BEARING TEST PERFORMED ON YOUR SOIL TO DETERMINE THE VALUE.

REF. CALCS. CWA-85.01- 85.02

ENGINEER APPROVAL: GARY L. STILWELL REGISTERED No. 910334 STATE OF INDIANA PROFESSIONAL ENGINEER

DAPIA APPROVAL: APPROVED BY NTA INC. FEDERAL MANUFACTURED HOME CONSTRUCTION AND SAFETY STANDARDS MAR 01 1999

JACOBSEN HOMES
P.O. BOX 368
SAFETY HARBOR, FLORIDA 34695
PHONE (727) 726-1138

NOTICE: THESE SPECIFICATIONS AND DRAWINGS ARE ORIGINAL, PROPRIETARY, AND CONFIDENTIAL MATERIALS OF JACOBSEN MANUFACTURING INC. SUCH MATERIALS ARE PROVIDED TO THE RECIPIENT FOR SPECIFIC PURPOSES AND MUST BE KEPT CONFIDENTIAL AND SECRET FROM OTHERS.

DRAWN BY:	DATE:	REV. LETTER:
M.T.	2-8-99	A

DRAWING TITLE: PIER FOOTER SPECS CHART

DRAWING NUMBER: SU-01-0040

MOBILE HOME SET-UP

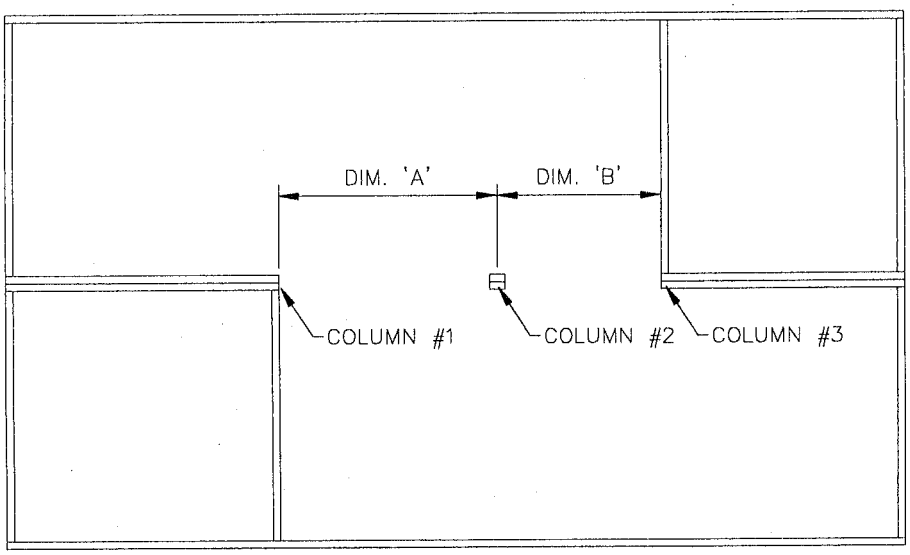

COLUMN SUPPORT SPANS

TO PROPERLY SIZE PIERS LOCATED AT RIDGE BEAM SUPPORT COLUMNS, SURVEY THE ARRANGEMENT OF THE ROOMS IN THE MOBILE HOME TO LOCATE THE OPENINGS ALONG THE MARRIAGE WALL OF THE HOME. MEASURE EACH OPENING IN THE MARRIAGE WALL PAYING ATTENTION PARTICULARLY TO OPENINGS GREATER THAN 4 FEET WIDE. IN THE EXAMPLE ABOVE TO DETERMINE THE SPAN FOR COLUMN #1 SIMPLY USE DIMENSION 'A'. TO DETERMINE THE SPAN FOR COLUMN #2 ADD DIMENSION 'A' AND DIMENSION 'B' TOGETHER. THE SPAN FOR COLUMN #3 CAN BE DETERMINED THE SAME WAY AS COLUMN #1 SIMPLY USE DIMENSION 'B'. ONCE THE COLUMN SPANS HAVE BEEN DETERMINED, FIND THE CORRESPONDING PIER FOOTING SIZE IN THE CHART (SU-01-0030).

JACOBSEN HOMES
P.O. BOX 368
SAFETY HARBOR, FLORIDA 34695
PHONE (727) 726-1138

NOTICE:
THESE SPECIFICATIONS AND DRAWINGS ARE ORIGINAL, PROPRIETARY, AND CONFIDENTIAL MATERIALS OF JACOBSEN MANUFACTURING INC. SUCH MATERIALS ARE PROVIDED TO THE RECIPIENT FOR SPECIFIC PURPOSES AND MUST BE KEPT CONFIDENTIAL AND SECRET FROM OTHERS.

DRAWN BY: S.A.	DATE: 6-6-94	REV. LETTER: —
DRAWING TITLE: COLUMN SUPPORT SPANS		
DRAWING NUMBER: SU-03-0001		

SET UP NOTES

(CLOSE UP)

YOUR HOME IS EQUIPPED WITH A FACTORY INSTALLED MATE LINE GASKET.

THE MATE LINE GASKET MUST BE INSPECTED BEFORE BRINGING THE HOME SECTIONS TOGETHER-IF THE GASKET IS DAMAGED, IT MAY BE REPAIRED WITH A FABRIC TYPE TAPE, AND IF DISLODGED, IT MUST BE REATTACHED.

THESE ARE (3) SUGGESTED (NOT REQUIRED) ITEMS TO HELP ELIMINATE AIR INFILTRATION.

1. FABRIC TYPE TAPE ADHERED TO BOTH SECTIONS BEFORE APPLYING ON-SITE FINISH MATERIALS.
2. THERMO-PLY STRIPS OR EQUIVALENT (2" WIDE MIN.) FASTENED TO BOTH SECTIONS WITH NAILS OR STAPLES BEFORE APPLYING EXTERIOR FINISH MATERIALS.
   (NOTE: THE ROOF IS MATERIAL AND APPLICATION SPECIFIC.)
3. SMALLER GAPS APPROX. 1/4" WIDE MAY BE SEALED WITH A BEAD OF LATEX CAULK.
   (NOTE: A FOAM SEALANT MAY BE USED IN LIEU OF A LATEX CAULK.)

BEFORE SETTING MULTIPLE WIDE UNITS, THE CLOSE-UP PLASTIC SHIPPING MATERIAL MUST BE REMOVED FROM ALL EXTERIOR WALLS OF ALL SECTIONS. THE SHIPPING PLASTIC MAY BE LEFT IN PLACE ON ALL MATING OR MARRIAGE WALLS OF EACH SECTION, BUT THE PANEL STRIPPING MATERIAL SECURING THE CLOSE-UP SHIPPING PLASTIC MUST BE REMOVED TO ALLOW THE MULTIPLE WIDE SECTIONS TO BE BROUGHT TOGETHER WITH MINIMUM GAPPING BETWEEN THE SECTIONS. THE SHIPPING PLASTIC IS TO BE LEFT IN PLACE AT THE ROOF LINE TO KEEP THE ROOF INSULATION IN PLACE (TACK IN PLACE BEFORE REMOVING SHIPPING STRIPS). AFTER THE SECTIONS ARE SET TOGETHER THE CLOSE-UP PLASTIC, IF LEFT ON THE MARRIAGE WALLS, IS TO BE CUT OUT AT ALL OPENINGS TO THE OTHER SECTIONS. WHEN THE HOME'S RETURN AIR GRILLE IS LOCATED IN THE MARRIAGE WALL, THE FRAMING IS TO BE SEALED WITH LATEX CAULK OR FOAM SEALANT.

AFTER REMOVAL OF THE GALVANIZED WIND DEFLECTOR(S) LOCATED ON THE ROOF AT THE HITCH END OF EACH SECTION OF THE HOME, SEAL ALL FASTENER PENETRATIONS OF THE ROOF SHINGLES WITH A ROOFING CEMENT OR OTHER SUITABLE MATERIAL. THE GALVANIZED WIND DEFLECTOR IS TO BE USED FOR THE ROOF CLOSE-UP, SEE AD-FA-0025 (AD-FA-0026 FOR TRIPLE WIDES).

NOTE: BEFORE INSTALLING A CEILING FAN, INSTALL A 4 CU. IN. MINIMUM BOX EXTENSION. (CHECK FACTORY INSTALLED CEILING BOX FOR LABELING INDICATING SUITABLE FOR DIRECT ATTACHMENT OF CEILING FAN FIXTURE-IF NOT LABELED AS BEING SUITABLE, YOU MUST INSTALL A HOOK TYPE CEILING FAN-INSTALL HOOK THROUGH BOX INTO LUMBER BACKER BEHIND FAN BOX.)

THE SAFETY CHAIN FOR ALL EXTERIOR OUTSWING DOORS SHALL BE INCLUDED IN THE SET-UP KIT. THE SAFETY CHAIN SHALL BE INSTALLED WHEN THE HOME IS SET-UP. INSTALL THE SAFETY CHAIN PER THE MANUFACTURERS SPECIFICATIONS INCLUDED WITH THE SAFETY CHAIN HARDWARE.

FASTEN ALL EXTERIOR SIDING TRIM WITH 7/16" X 1" x 16 GA. STAPLES (OR EQUIVALENT) 6" O.C. MAXIMUM THROUGH SHEATHING INTO WALL OR FLOOR FRAMING.

(UNDER HOME VENTILATION)

WHEN ENCLOSING THE SPACE FROM THE BOTTOM OF YOUR HOME TO THE GROUND (SKIRTING, FOUNDATION WALLS, OR OTHER METHODS) THE AMOUNT OF VENTILATION REQUIRED IS TO BE DONE TO THE LOCAL CODES AND INSPECTED BY THE AUTHORITIES HAVING JURIDICTION.

JACOBSEN HOMES
P.O. BOX 368
SAFETY HARBOR, FLORIDA 34695
PHONE (727) 726-1138

NOTICE:
THESE SPECIFICATIONS AND DRAWINGS ARE ORIGINAL, PROPRIETARY, AND CONFIDENTIAL MATERIALS OF JACOBSEN MANUFACTURING INC. SUCH MATERIALS ARE PROVIDED TO THE RECIPIENT FOR SPECIFIC PURPOSES AND MUST BE KEPT CONFIDENTIAL AND SECRET FROM OTHERS.

DRAWN BY: M.T.	DATE: 12-22-94	REV. LETTER: A 02-12-08
DRAWING TITLE: SET UP NOTES		
DRAWING NUMBER: SU-05-0001		

EXTERIOR ROOFING CLOSE-UP

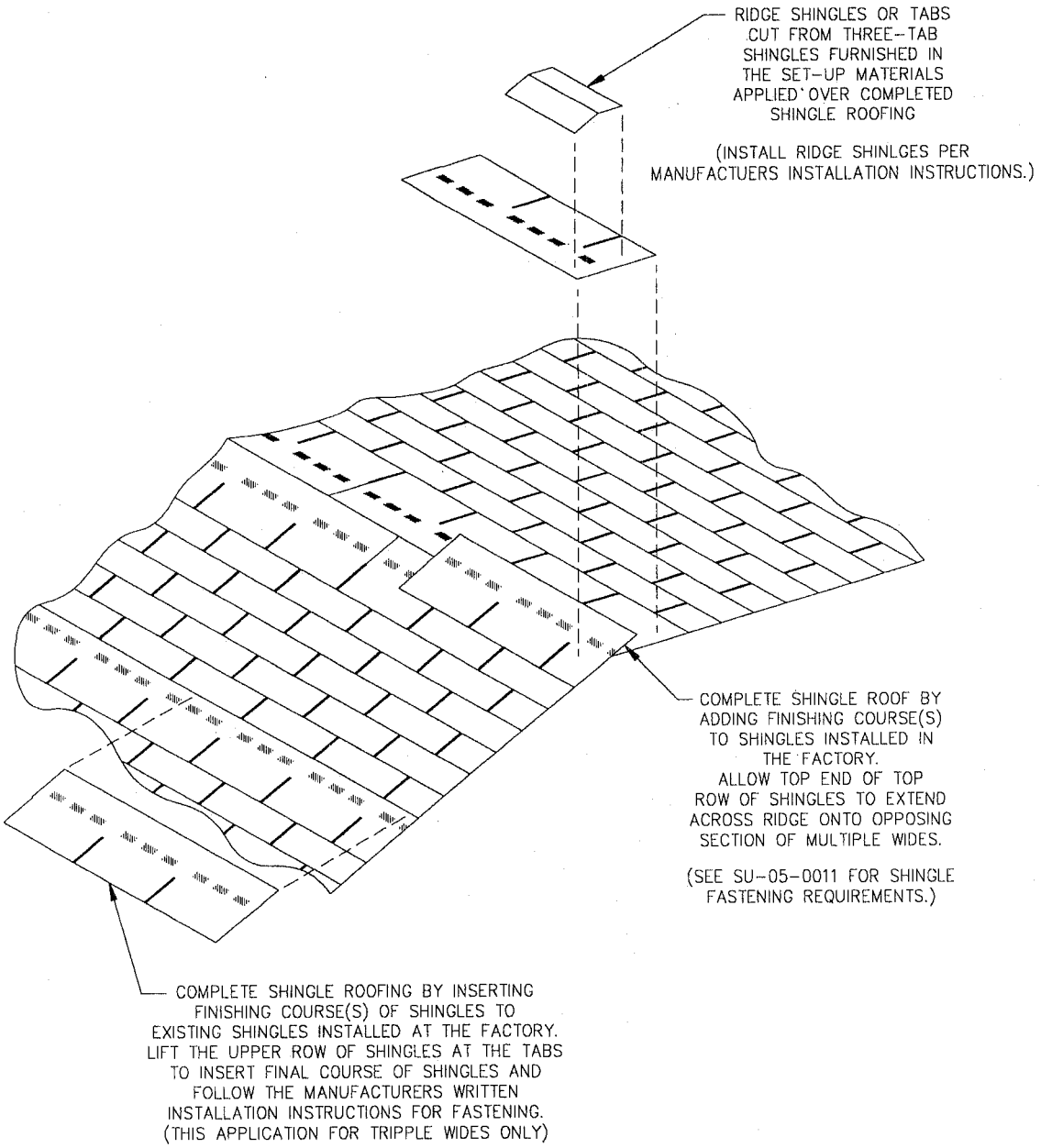

NOTES:

1. RIDGE SHINGLES ARE FACTORY APPLIED ON TRIPPLE WIDE HOMES, AND MUST BE APPLIED DURING SET-UP FOR DOUBLE WIDE HOMES.

JACOBSEN HOMES

P.O. BOX 368
SAFETY HARBOR, FLORIDA 34695
PHONE (727) 726-1138

NOTICE:
THESE SPECIFICATIONS AND DRAWINGS ARE ORIGINAL, PROPRIETARY, AND CONFIDENTIAL MATERIALS OF JACOBSEN MANUFACTURING INC. SUCH MATERIALS ARE PROVIDED TO THE RECIPIENT FOR SPECIFIC PURPOSES AND MUST BE KEPT CONFIDENTIAL AND SECRET FROM OTHERS.

DRAWN BY: S.A.	DATE: 6-6-94	REV. LETTER: —
DRAWING TITLE: EXTERIOR ROOFING CLOSE-UP		
DRAWING NUMBER: SU-05-0010		

SHINGLE INSTALLATION

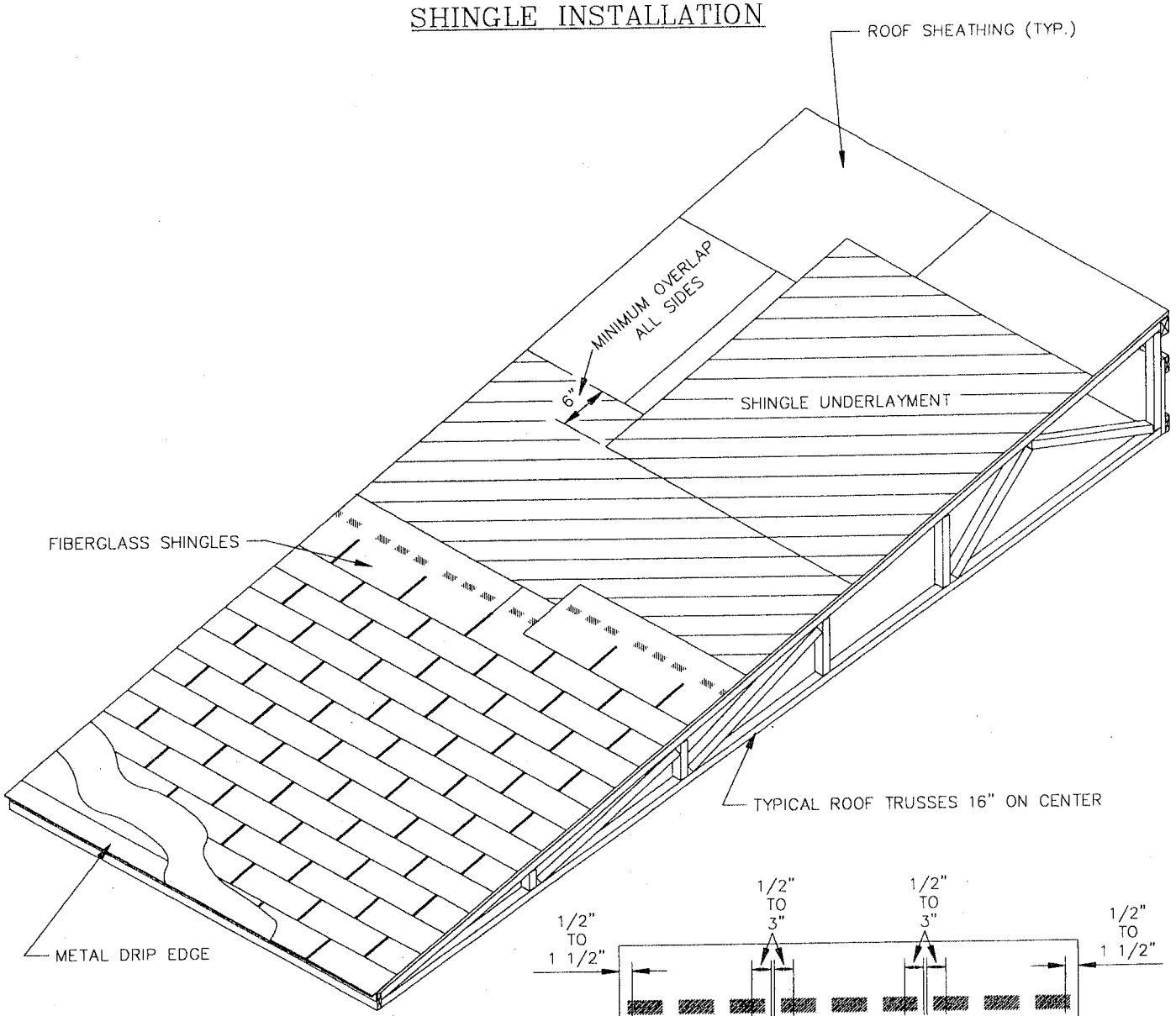

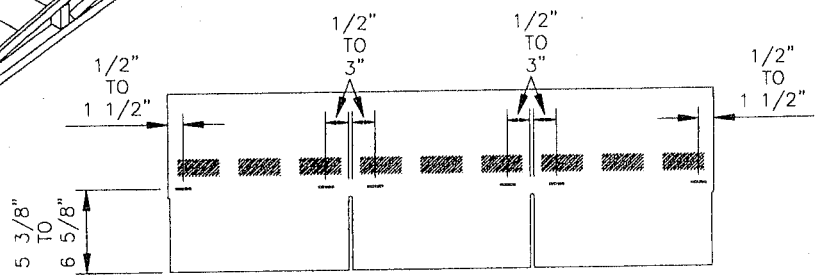

FASTENING DETAIL

SEE PAGE RC-19-0002

NOTES:

1. SHINGLES FASTENED W/ MIN. 1" X 3/4" X 16 GA. STAPLES AS SHOWN IN THE SHINGLE FASTENING DETAIL. IF A STAPLE IS OVER-DRIVEN, PROPERLY INSTALL ANOTHER STAPLE RIGHT OR LEFT OF OVER-DRIVEN STAPLE AND SEAL OVER-DRIVEN STAPLE WITH ROOFING CEMENT.
2. WHEN METAL DRIP EDGE IS INSTALLED, IT IS NOT NECESSARY FOR SHINGLES TO OVERHANG THE RAKE (FRONT & REAR) EDGE OF THE ROOF.
3. SHINGLE UNDERLAYMENT FASTENED TO DECKING W/ MIN. 3/8" X 3/4" X 18 GA. STAPLES MIN. (TACKED DOWN UNTIL SHINGLES ARE APPLIED).
4. METAL DRIP EDGE FASTENED TO DECKING W/ MIN. 3/8" X 3/4" X 18 GA. STAPLES 12" O.C. MAXIMUM.
5. SHINGLE ROOF COVERINGS WHICH ARE SECURED W/ 6 FASTENERS PER SHINGLE THROUGH AN UNDERLAYMENT WHICH IS CEMENTED DOWN TO 3/8" STRUCTURAL RATED ROOF SHEATHING NEED NOT BE EVALUATED FOR DESIGN WIND PRESSURES.

NOTE:
SHINGLES INSTALLED PER MANUFACTURERS INSTALLATION INSTRUCTIONS ONLY WHEN SPECIFIC APPLICATIONS ARE NOT COVERED WITHIN THIS MANUAL.

JACOBSEN HOMES
P.O. BOX 368, 901 4th ST. NORTH
SAFETY HARBOR, FLA. 34695
PHONE (813) 726-1138

SHINGLE INSTALLATION
© 6-6-94

REVISIONS:	DATE: 12-21-94
	SU-05-0011

EXTERIOR FINISH CLOSE-UP

SOFFIT AND FASCIA APPLICATION DETAIL

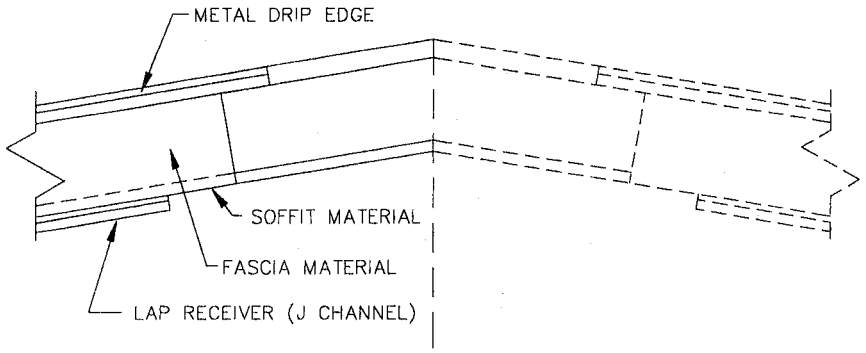

NOTES:

1. ALL MATERIALS REQUIRED FOR ON SITE COMPLETION OF THE LAP SIDING APPLICATION IS SHIPPED INSIDE THE HOME WITH THE SET-UP KIT.
2. FIRST LOCATE AND SECURE THE SOFFIT MATERIAL TO EACH SECTION OF THE HOME WITH EITHER STAPLES, NAILS, OR SHEET METAL SCREWS 6" O.C.
3. NEXT LOCATE AND SECURE THE FASCIA MATERIAL IN THE SAME MANNER AS LISTED ABOVE FOR THE SOFFIT.
4. THEN COMPLETE THE APPLICATION OF BOTH THE METAL DRIP EDGE AND THE LAP SIDING RECEIVER.
5. AFTER ALL PARTS HAVE BEEN JOINED AT THE MATING EDGES OF EACH SECTION OF THE HOME, BEGIN WITH THE LAP SIDING APPLICATION. START THE LAP SIDING APPLICATION AT THE BOTTOM OF THE HOME AS SHOWN IN THE LAP SIDING APPLICATION DETAIL BELOW. ALL TRIM AROUND OPENINGS (ie. WINDOWS AND DOORS) IS COMPLETED BEFORE THE HOME IS SHIPPED. LEAVE AMPLE ROOM AT ALL TRIM FOR THE LAP SIDING TO EXPAND AND CONTRACT WITH TEMPERATURE CHANGES. FOR ANY ADDITIONAL INFORMATION REQUIRED SEE THE MANUFACTURERS INSTALLATION INSTRUCTIONS PLACED INSIDE THE SET-UP KIT SHIPPED WITH THE HOME.

LAP SIDING FASTENING:

1. SECURE HORIZ. LAP SIDING W/ MIN. 7/16" X 1" X 16 GA. STAPLES 16" O. C. MAXIMUM THROUGH SHEATHING INTO STUD. SECURE ALL EXTERIOR TRIM W/ MIN. 7/16" x 5/8" x 16 GA. STAPLES AT 6" O. C. MAXIMUM.
2. WITH METAL LAP STAPLE CROWNS MAY BE EITHER PARALLEL OR PERPENDICULAR TO NAILING FLANGE WITH BOTH LEGS OF STAPLE PENETRATING THE NAILING FLANGE.
3. WITH VINYL SIDING STAPLE CROWNS TO BE PERPENDICULAR TO NAILING FLANGE WITH ONE LEG CENTERED IN SLOT AND OTHER LEG ON OUTSIDE OF NAILING FLANGE WITH APPROX. 1/32" SPACE BETWEEN STAPLE CROWN AND NAILING FLANGE.
4. ALL FASTENERS TO BE WEATHER RESISTANT.

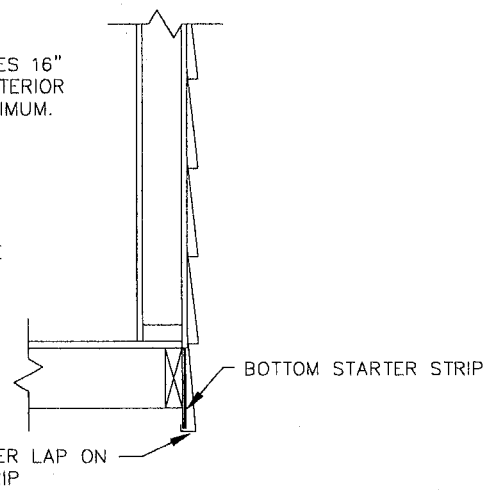

LAP SIDING APPLICATION DETAIL

JACOBSEN HOMES
P.O. BOX 368
SAFETY HARBOR, FLORIDA 34695
PHONE (727) 726-1138

NOTICE:
THESE SPECIFICATIONS AND DRAWINGS ARE ORIGINAL, PROPRIETARY, AND CONFIDENTIAL MATERIALS OF JACOBSEN MANUFACTURING INC. SUCH MATERIALS ARE PROVIDED TO THE RECIPIENT FOR SPECIFIC PURPOSES AND MUST BE KEPT CONFIDENTIAL AND SECRET FROM OTHERS.

DRAWN BY: S.A.	DATE: 12-22-94	REV. LETTER:
DRAWING TITLE: EXTERIOR FINISH CLOSE-UP		—
DRAWING NUMBER: SU-05-0020		

MOBILE HOME SET-UP/CLOSE-UP

SITE INSTALLED EXTERIOR SIDING APPLICATION

SEE OTHER DETAILS (SU-05-0031 THRU 0034) FOR PLAN VIEW DETAILS IDENTIFING AREAS REQUIRING EXTERIOR SIDING TO BE SITE INSTALLED. SEE SU-05-0020 FOR LAP SIDING FASTENING, AND SOFFIT AND FACIA APPLICATION. ALL AREAS WHERE THE EXTERIOR SIDING MATERIALS EXTEND ACROSS THE MATING LINE BETWEEN MULTIPLE WIDE UNITS ARE REQUIRED TO BE FINISHED ON SITE TO PREVENT A CONTINUOUS SEAM IN THE EXTERIOR SIDING LOCATED AT THE MATING LINE(S) OF THE HOME.

ALL TRIM AND EXTERIOR SIDING MATERIALS ARE PROVIDED IN THE HOME SET-UP KIT FOR COMPLETION OF ALL EXTERIOR SIDING APPLICATIONS FOR THE HOME. THE STARTER STRIP FOR THE LAP SIDING APPLICATION IS INSTALLED AT THE FACTORY TO ENSURE STRAIGHT ALIGNED APPLICATION OF THE SIDING. ALL TRIM MATERIALS NOT REQUIRING FASTENING TO MORE THAN ONE SECTION OF MULTIPLE SECTION HOMES IS ALSO FACTORY INSTALLED TO ENSURE PROPER CLEARANCES AND AN ASSURED MATCH TO THE REMAINDER OF THE HOME.

ALL TRIM MATERIALS SECURED TO MORE THAN ONE SECTION OF THE HOME ARE TO BE FASTENED TO THE WALL FRAMING MEMBERS WITH MIN. 7/16" X 5/8" X 16 GA. STAPLES OR 1" ROOFING NAILS 6" O.C. MAXIMUM. TAKE CARE IN LOCATING TRIM MATERIALS TO ENSURE PROPER ALIGNMENT WITH THE FACTORY INSTALLED MATERIALS. ALL FASTENERS USED MUST BE WEATHER RESISTANT TO INSURE DURIBILITY.

ENCLOSED WITH THE EXTERIOR SIDING MATERIALS ARE THE MANUFACTURERS INSTALLATION INSTRUCTIONS DETAILING THE RECOMENDED INSTALLATION PROCEDURES AND SPECIFICATIONS FOR THE TYPE OF SIDING BEING USED ON THE HOME.

CAREFULLY EXAMINE THE MANUFACTURERS INSTALLATION INSTRUCTIONS BEFORE ANY ATTEMPT TO COMPLETE THE REQUIRED INSTALLATION OF THE EXTERIOR SIDING MATERIALS. SHOULD FOR ANY REASON THE MANUFACTURERS INSTALLATION INSTRUCTIONS BE LOST OR MISSING, CONTACT JACOBSEN HOMES AT 901 4th Street North Safety Harbor, Florida 34695 OR CALL (813) 726-1138 FOR REQUESTING THE INSTALLATION INSTRUCTIONS.

SKIRTING MUST BE ATTACHED IN A MANNER SO THE VINYL WILL SLIDE (EXPAND AND CONTRACT).

WHEN 6 MIL PLASTIC UNDER HOMES, THE VENTILATION OF THE CRAWL SPACE CAN BE REDUCED TO 1 SQUARE FEET OF VENTILATION PER EVERY 1500 SQUARE FEET.

JACOBSEN HOMES
P.O. BOX 368
SAFETY HARBOR, FLORIDA 34695
PHONE (727) 726-1138

NOTICE:
THESE SPECIFICATIONS AND DRAWINGS ARE ORIGINAL, PROPRIETARY, AND CONFIDENTIAL MATERIALS OF JACOBSEN MANUFACTURING INC. SUCH MATERIALS ARE PROVIDED TO THE RECIPIENT FOR SPECIFIC PURPOSES AND MUST BE KEPT CONFIDENTIAL AND SECRET FROM OTHERS.

DRAWN BY: O.A.	DATE: 06-06-94	REV. LETTER: A (09-30-08)
DRAWING TITLE: EXTERIOR SIDING APPLICATION		
DRAWING NUMBER: SU-05-0030		

MOBILE HOME SET-UP/CLOSE-UP

SITE INSTALLED EXTERIOR SIDING APPLICATION
(FOR SLIP UNIT MULTIPLE WIDES)

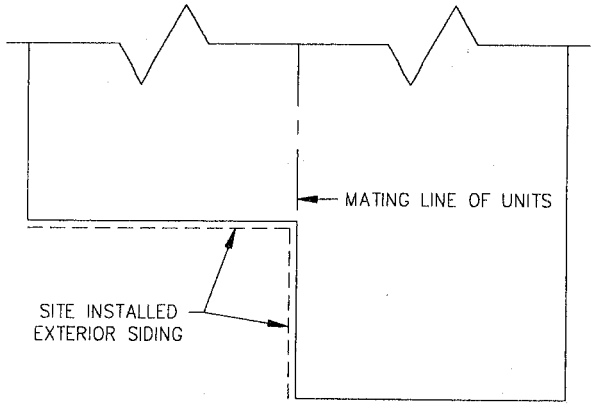

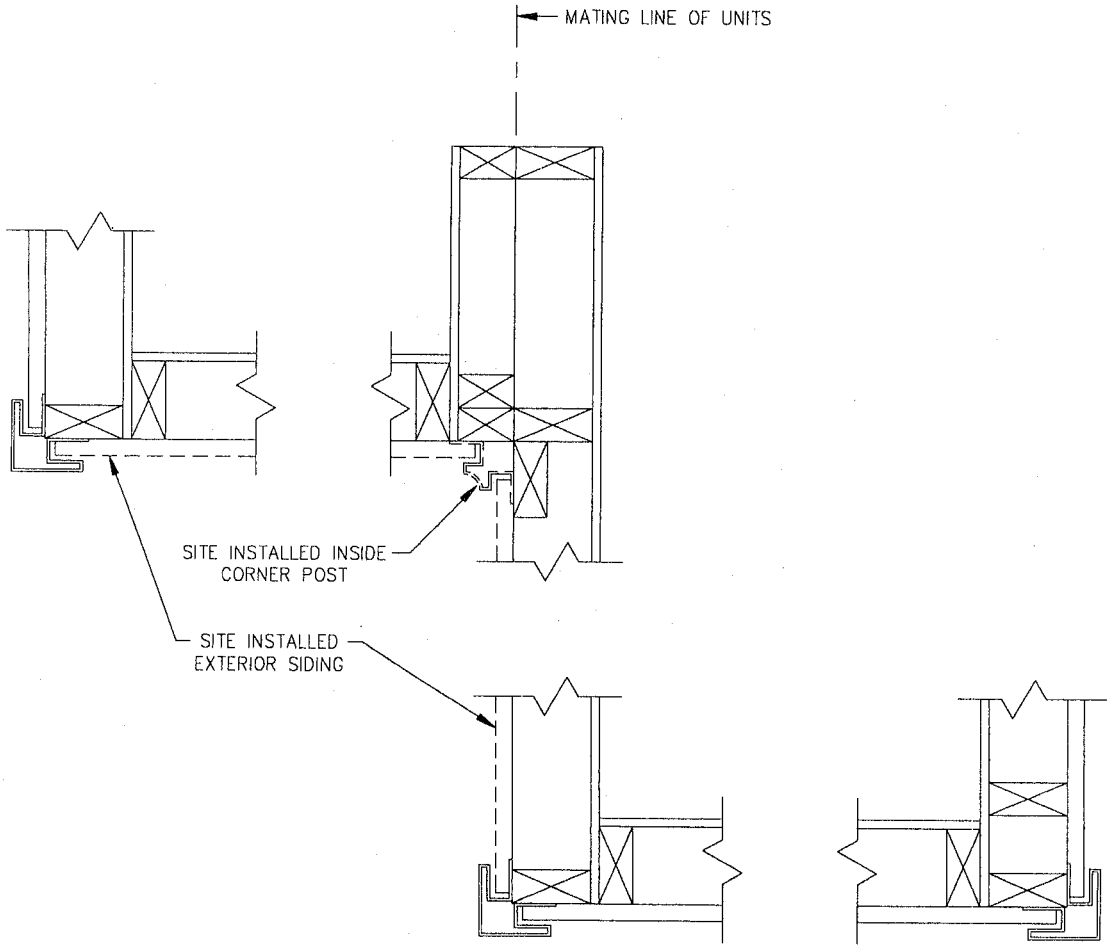

JACOBSEN HOMES

P.O. BOX 368
SAFETY HARBOR, FLORIDA 34695
PHONE (727) 726-1138

NOTICE:
THESE SPECIFICATIONS AND DRAWINGS ARE ORIGINAL, PROPRIETARY, AND CONFIDENTIAL MATERIALS OF JACOBSEN MANUFACTURING INC. SUCH MATERIALS ARE PROVIDED TO THE RECIPIENT FOR SPECIFIC PURPOSES AND MUST BE KEPT CONFIDENTIAL AND SECRET FROM OTHERS.

DRAWN BY: S.A.	DATE: 6-6-94	REV. LETTER: —
DRAWING TITLE: EXT.SID.APPL. FOR SLIP UNIT		
DRAWING NUMBER: SU-05-0031		

APPROVED BY
NTA INC.
FEDERAL MANUFACTURED HOME CONSTRUCTION AND SAFETY STANDARDS
JUL 13 1994

EXTERIOR WALL SHEATHING INSTALLATION (UNDER VINYL SIDING)

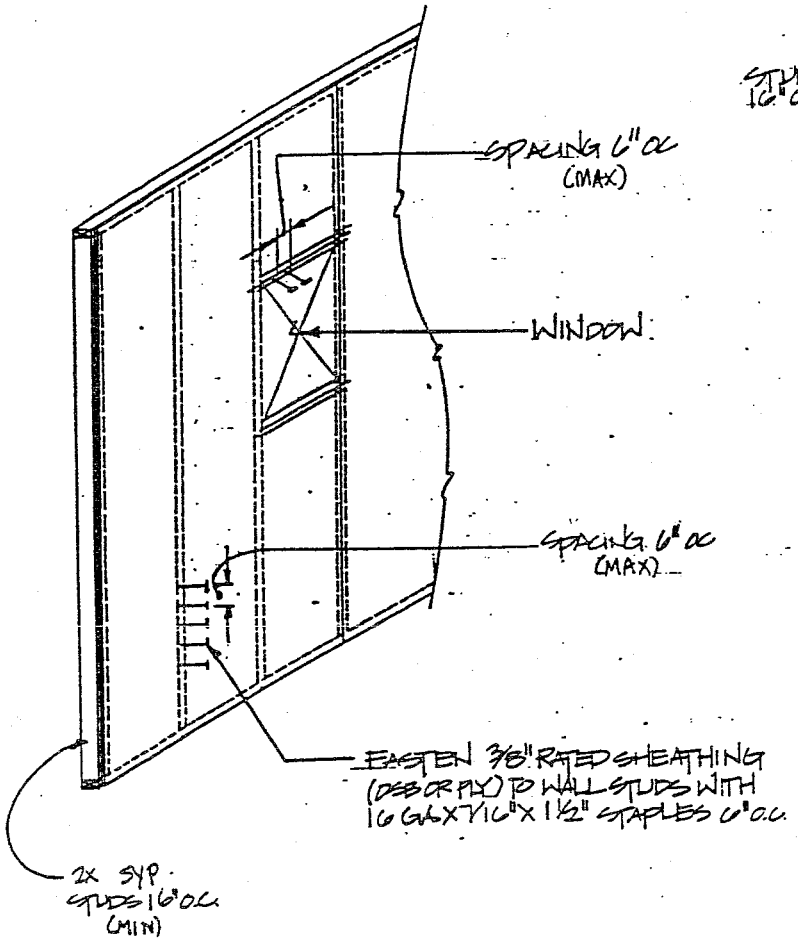

VARIFORM
VINYL SIDING INSTALLATION (SYP STUDS)
(.035" MIN. VINYL THICKNESS)

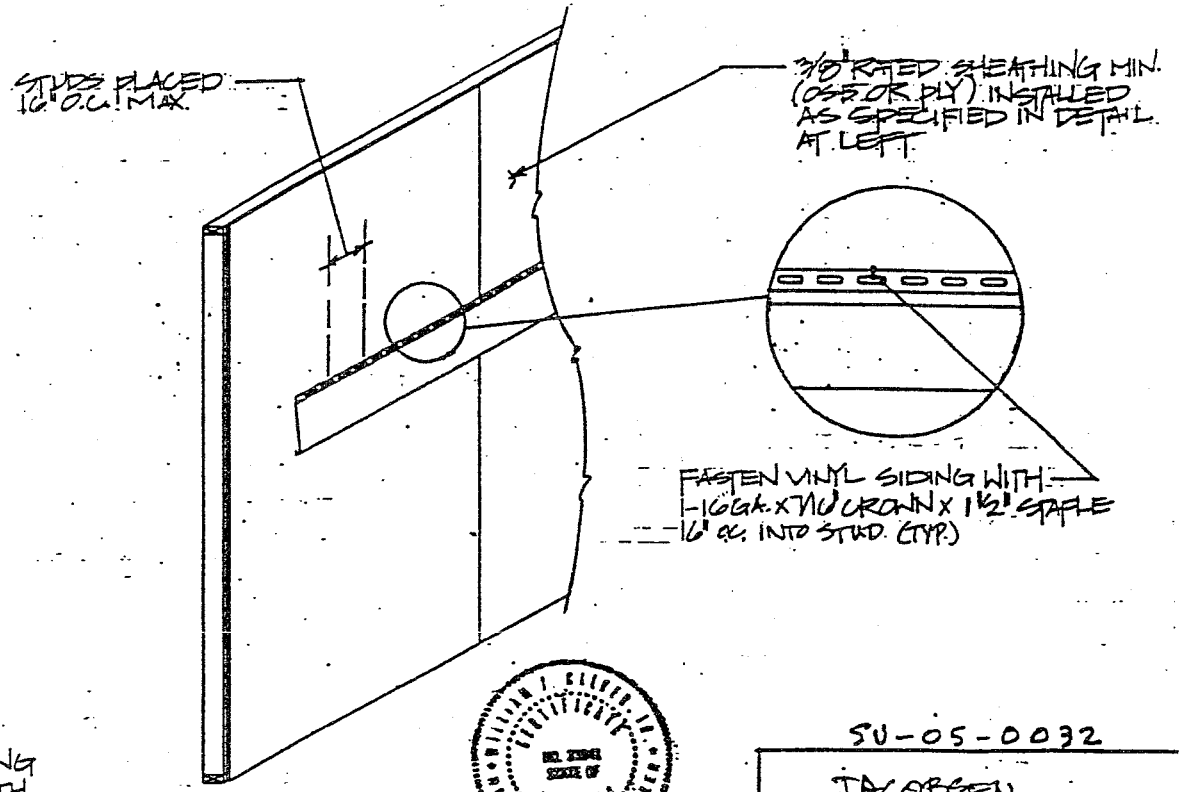

WILLIAM T. ELLIOTT, JR. REGISTERED ENGINEER NO. 23943 STATE OF FLORIDA

W.E. 7/14/94

ZONE 2 AND 3

SU-05-0032

JACOBSEN	
DATE: 7/14/94	DWG BY: AEG
SCALE: NTS	REV.
TYPE: VINYL SIDING INSTALLATION	
DWG. NO. WALL 1-B	
W. KALKER & ASSOC.	

APPROVED BY
NTA INC.
JUL 13 1994
FEDERAL MANUFACTURED HOME CONSTRUCTION AND SAFETY STANDARDS

EXTERIOR WALL SHEATHING INSTALLATION (UNDER VINYL SIDING)

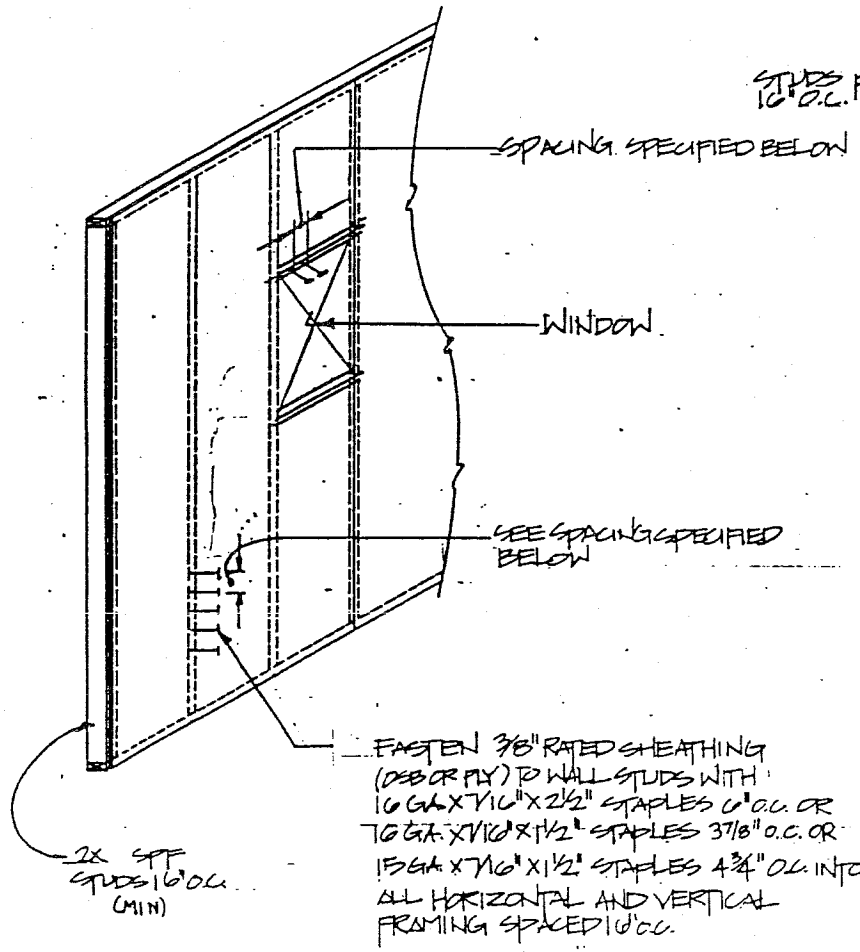

VARIFORM

VINYL SIDING INSTALLATION (SPF STUDS)

(.035" MIN. VINYL THICKNESS)

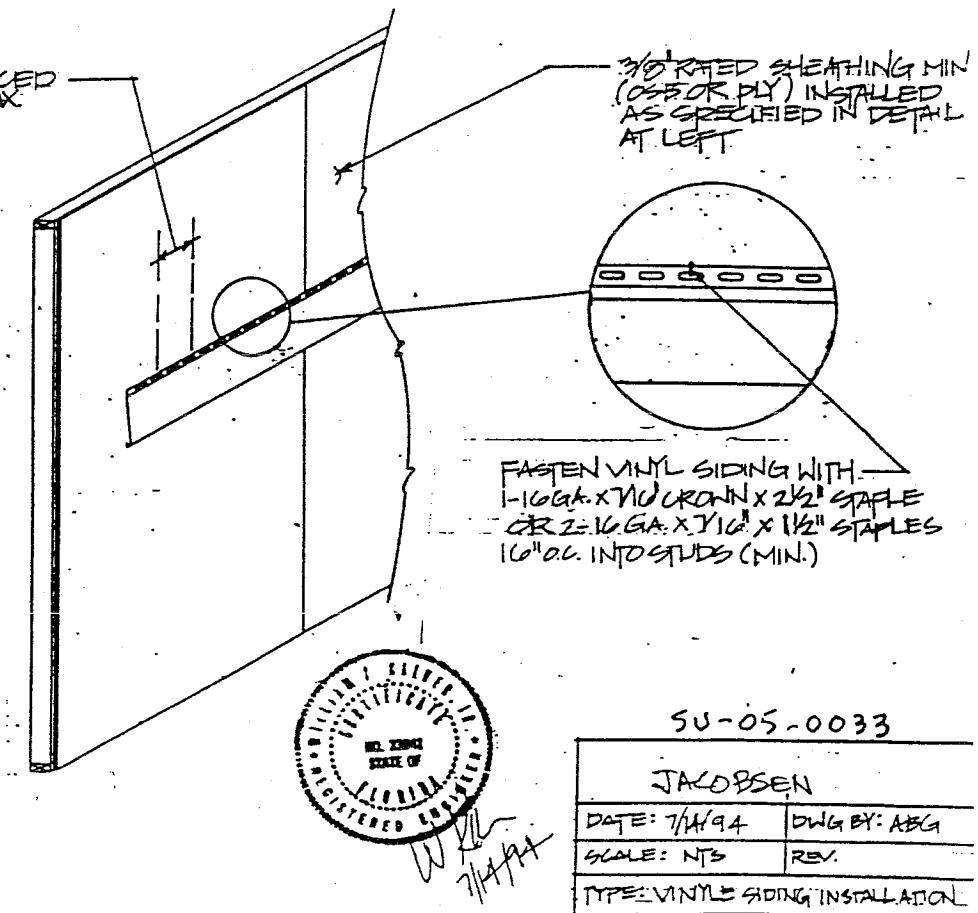

ZONE 2 AND 3

SU-05-0033

JACOBSEN	
DATE: 7/14/94	DWG BY: ABG
SCALE: NTS	REV.
TYPE: VINYL SIDING INSTALLATION	
DWG. NO. WALL 1-A	

MOBILE HOME SET-UP

SHUTTER INSTALLATION:

SHUTT RS ARE NORMALLY FASTENED BY SCREWING DIRECTLY THROUGH THE VINYL SIDING. THIS TENDS TO RESTRICT SIDE-TO-SIDE MOVEMENT OF THE VINYL SIDING PANELS. HOWEVER, SEVERAL THINGS CAN BE DONE TO ELIMINATE BUCKLING OR OIL CANNING OF THE VINYL SIDING IN THESE AREAS:

A. WHEN PANELS RUN FROM WINDOW AREA TO A CORNER POST OR OR J-CHANNEL (OR ANY TYP. VINYL SIDING TRIM) AT THE OPPOSITE END, BE SURE TO LEAVE PROPER CLEARANCE IN THE 'POCKET" - THEN SIDING WILL EXPAND TOTALLY IN THAT DIRECTION.

B. TWO SHUTTERS BETWEEN WINDOWS:
THE PANELS THAT WILL BE RESTRICTED BY THE SHUTTER SCREWS SHOULD BE SHORTER LENGTHS (SEAM BETWEEN WINDOWS - NOT ONE CONTINUOUS PIECE OF VINYL) - SIMPLY OVERLAP TWO PANELS IN THIS AREA. PANELS WILL THEN EXPAND TOWARD THE OVERLAP JOINT (SEE DETAIL "A").

OR

STAGGER THE SHUTTER SCREWS - INSTALL FIRST SHUTTER, TAKE NOTE OF WHICH PANELS ARE RESTRICTED BY THE SCREWS. THEN INSTALL THE OPPOSITE SHUTTER, POSITION THE SCREWS FOR THIS SHUTTER THROUGH PANELS EITHER ABOVE OR BELOW THE PANELS RESTRICTED BY THE SCREWS FROM THE FIRST SHUTTER. BY DOING THIS THE PANELS OF VINYL SIDING WILL BE ABLE TO EXPAND IN AT LEAST ONE DIRECTION, SO LONG AS PROPER CLEARANCE HAS BEEN MAINTAINED IN THE "POCKET" AREA OF THE CHANNEL. (SEE DETAIL "B")

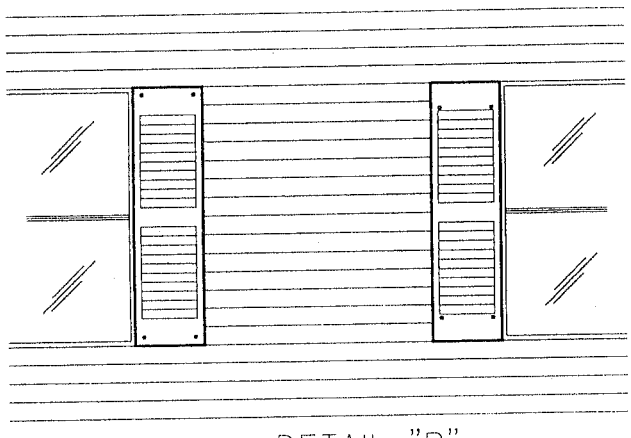

DETAIL "B"

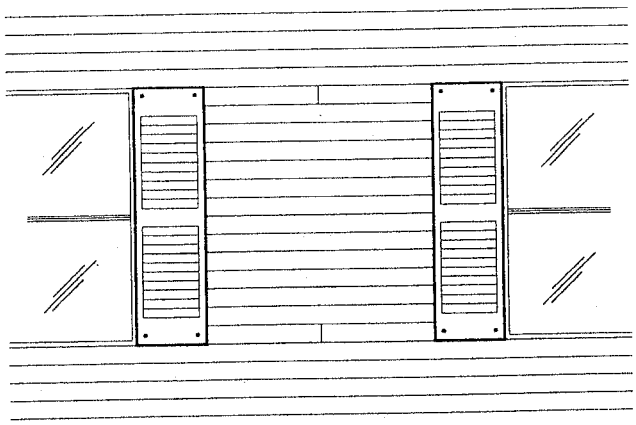

DETAIL "A"

JACOBSEN HOMES
P.O. BOX 368
SAFETY HARBOR, FLORIDA 34695
PHONE (727) 726-1138

NOTICE:
THESE SPECIFICATIONS AND DRAWINGS ARE ORIGINAL, PROPRIETARY, AND CONFIDENTIAL MATERIALS OF JACOBSEN MANUFACTURING INC. SUCH MATERIALS ARE PROVIDED TO THE RECIPIENT FOR SPECIFIC PURPOSES AND MUST BE KEPT CONFIDENTIAL AND SECRET FROM OTHERS.

DRAWN BY: S.A.	DATE: 6-6-94	REV. LETTER: ----
DRAWING TITLE: SHUTTER INSTALLATION		
DRAWING NUMBER: SU-05-0034		

MOBILE HOME SET-UP

TIEDOWNS

THERE ARE TWO TYPES OF WIND THAT CAUSE DAMAGE: HORIZONTAL AND UPLIFT. YOUR HOME IS DESIGNED FOR THE HURRICANE ZONE (ZONE III). IF YOU FOLLOW OUR RECOMMENDATIONS YOU WILL PROTECT YOUR HOME FROM BOTH TYPES OF WIND FORCES.

IN TIEING DOWN YOUR HOME, YOU MUST USE MATERIALS OF ADEQUATE STRENGTH AND SPECIFICATIONS.

ANCHORING EQUIPMENT- (LOAD RESISTANCE) ANCHORING EQUIPMENT SHALL BE CAPABLE OF RESISTING AN ALLOWABLE WORKING LOAD EQUAL TO OR EXCEEDING 3,150 POUNDS AND SHALL BE CAPABLE OF WITHSTANDING A 50 PERCENT OVERLOAD (4,725 POUNDS TOTAL) WITHOUT FAILURE OF THE ANCHORING EQUIPMENT.

ANCHORING EQUIPMENT- (WEATHERIZATION) ANCHORING EQUIPMENT (STRAPS, ETC...) EXPOSED TO WEATHERING SHALL HAVE A RESISTANCE TO WEATHER DETERIORATION AT LEAST EQUIVALENT TO THAT PROVIDED BY A COATING OF ZINC ON STEEL OF NOT LESS THAN 0.30 OUNCES PER SQUARE FOOT OF SURFACE COATED, AND IN ACCORDANCE WITH THE FOLLOWING:

SLIT OR CUT EDGES OF ZINC-COATED STEEL STRAPPING NEED NOT BE ZINC COATED.

TIE-DOWN STRAPS SHALL BE TYPE 1, FINISH B, GRADE 1 STEEL STRAPPING, 1 1/4 INCHES WIDE AND 0.035 INCHES IN THICKNESS, CERTIFIED BY A REGISTERED PROFESSIONAL ENGINEER OR ARCHITECT AS CONFORMING WITH ASTM STANDARD SPECIFICATION D3953-91, STANDARD SPECIFICATION FOR STRAPPING, FLAT STEEL AND SEALS.

ANCHORING NOTE:

THERE IS A TENDENCY FOR THE TOP OF THE ANCHOR ROD TO DEFLECT AND MOVE OR "SLICE" THROUGH THE SOIL WHEN LOADED WITH THE FRAME TIE. THIS IS NOT DESIRABLE, SINCE IT PERMITS THE MOBILE HOME TO BE DISPLACED DOWNWIND AND TEND TO SLIDE OFF THE PIERS. TO MINIMIZE DEFLECTIONS, AUGER-TYPE AND OTHER ANCHORS USING STEEL RODS SHOULD BE PUT ON AT AN ANGLE SO THEY ARE MORE IN LINE WITH THE DIRECTION OF PULL. THIS CAN BEST BE ACCOMPLISHED BY INSTALLING THE ANCHORS PRIOR TO PLACEMENT OF THE MOBILE HOME ON THE LOT. IF VERTICAL ANCHORS ARE DESIRED, THE ANCHOR MUST BE LISTED FOR USE VERTICALLY AT THE CAPACITY REQUIRED FOR THE STRAPPING BEING ATTACHED.

APPROVED BY
NTA INC. JUL 13 1994
FEDERAL MANUFACTURED HOME CONSTRUCTION AND SAFETY STANDARDS®

CAUTION: DO NOT PRETENSION TIE-DOWN STRAPS ON ONE SIDE OF THE HOME ONLY. IF TENSION IS NOT APPLIED TO TIE-DOWNS ALTERNATELY ON OPPOSITE SIDES, THE HOME MAY BE PULLED OFF THE SUPPORTS.

6-6-94

SU-07-0001

TIE-DOWN STRAPS

SEE ADDENDUM TO SET-UP MANUAL FOR SPECIFIC TIE-DOWN INFORMATION.

THE DETAILS IN THIS MANUAL ARE ONLY TYPICALS, SEE ADDENDUM FOR SPECIFICS.

DANGER: DO NOT PRETENSION TIE-DOWN STRAPS ON ONE SIDE OF THE HOME ONLY. IF TENSION IS NOT APPLIED TO TIE-DOWNS ALTERNATELY ON OPPOSITE SIDES, THE HOME MAY BE PULLED OFF THE SUPPORTS.

JACOBSEN HOMES
P.O. BOX 368
SAFETY HARBOR, FLORIDA 34695
PHONE (727) 726-1138

NOTICE:
THESE SPECIFICATIONS AND DRAWINGS ARE ORIGINAL, PROPRIETARY, AND CONFIDENTIAL MATERIALS OF JACOBSEN MANUFACTURING INC. SUCH MATERIALS ARE PROVIDED TO THE RECIPIENT FOR SPECIFIC PURPOSES AND MUST BE KEPT CONFIDENTIAL AND SECRET FROM OTHERS.

DRAWN BY: S.A.	DATE: 7-20-94	REV. LETTER: —
DRAWING TITLE: TIE-DOWN STRAPS		
DRAWING NUMBER: SU-07-0002		

MOBILE HOME SET-UP/ELECTRICAL

ELECTRICAL CONNECTIONS BETWEEN HOME SECTIONS

NOTE: NO ELECTRICAL POWER SHOULD BE CONNECTED TO HOMES WHILE MAKING ELECTRICAL CONNECTIONS.

ALL ELECTRICAL WORK SHOULD BE DONE BY A QUALIFIED ELECTRICIAN.

MATERIAL SUPPLIED

1. APPROPORATE NUMBER OF JUNCTION BOXES TO MAKE 2 CONNECTIONS PER JUNCTION BOX. (SHIPPED LOOSE IN THE SET-UP KIT)
2. WIRE NUTS.
3. JUNCTION BOX COVERS.

INSTRUCTIONS

A. SECURE JUNCTION BOXES UNDER HOME.
B. WIRES HAVE BEEN COLOR CODED; SIMPLY MATCH UP COLOR CO-ORDINATED WIRES WITHIN A JUNCTION BOX AND CONNECT WITH WIRE NUTS.
C. PLACE COVERS OVER JUNCTION BOXES.

OMITTED CEILING FIXTURES

FIXTURES TO BE INSTALLED AT THESE LOCATIONS MUST BE A TWO WIRE FIXTURE WITH GROUND. INSTALL ALL FIXTURES BEFORE TURNING ON MAIN BREAKERS.

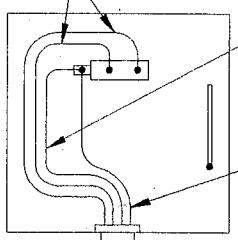

TYPICAL ELECTRICAL CONNECTIONS

CROSS-OVER CONNECTIONS

CROSS-OVER
INFORMATION APPLIES
TO MULTI-SECTION UNITS

CROSS-OVER WIRES ARE COLOR-CODED

SERVICE CONDUCTORS

MAIN BREAKER	HOT	NEUTRAL	GROUND
150	(2) NO. 1	NO. 1	NO. 6
200	(2) NO. 2/0	NO. 2/0	NO. 6

NOTE: ABOVE SERVICE CONDUCTORS ARE FOR COPPER ONLY. FOR COPPER-CLAD ALUMINUM REFER TO LOCAL CODES

ELECTRICAL PANEL LABEL

THIS LABEL IS LOCATED ON OR NEAR THE ELECTRICAL PANEL
THE MINIMUM SIZE JUNCTION BOX ATTACHED TO THE CONDUIT FOR SERVICE CONDUCTORS ARE:
9" X 9" X 4" - 150 AMP OR 12" X 12" X 4" - 200 AMP

JACOBSEN HOMES
P.O. BOX 368
SAFETY HARBOR, FLORIDA 34695
PHONE (727) 726-1138

NOTICE:
THESE SPECIFICATIONS AND DRAWINGS ARE ORIGINAL, PROPRIETARY, AND CONFIDENTIAL MATERIALS OF JACOBSEN MANUFACTURING INC. SUCH MATERIALS ARE PROVIDED TO THE RECIPIENT FOR SPECIFIC PURPOSES AND MUST BE KEPT CONFIDENTIAL AND SECRET FROM OTHERS.

DRAWN BY: D.M.T.	DATE: 01-24-02	REV. LETTER:
DRAWING TITLE: SET-UP/ELECTRICAL		A
DRAWING NUMBER: SU-09-0001		

ELECTRICAL CROSS-OVER & TESTING PROCEDURES

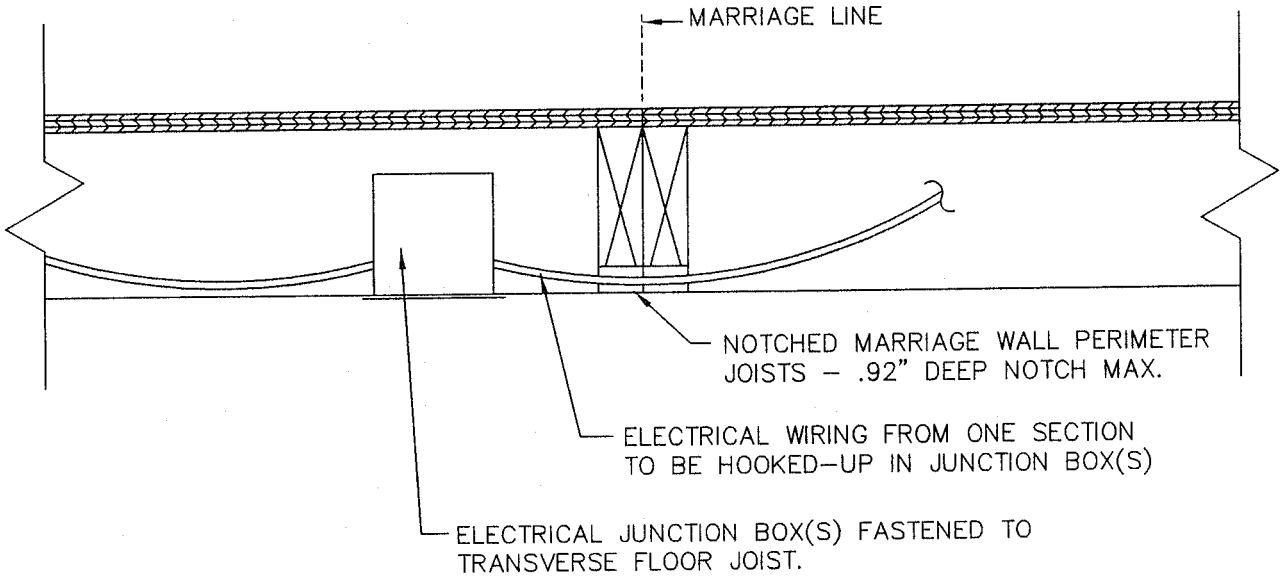

AFTER ALL ELECTRICAL WIRING CONNECTIONS ARE MADE, SYSTEM MUST BE INSPECTED AND TESTED. (FOR CONTINUITY TEST PROCEDURES SEE SU-09-0020)

TESTING THE POLARITY OF THE ELECTRICAL SYSTEM WILL REQUIRE TEST EQUIPMENT CAPABLE OF DETERMING INCORRECT WIRING CONFIGURATIONS, AND ALSO SHOULD INCLUDE ADAPTERS FOR VARIOUS CONFIGURATIONS (POLARITY TESTER). USING THIS DEVICE ALL ELECTRICAL CONNECTIONS (INCLUDING OUTSIDE FIXTURES SUCH AS HEAT TAPE RECEPTACLE) ARE INDIVIDUAL TESTED TO ENSURE ALL CONNECTIONS HAVE BEEN PROPERLY MADE. A PIGTAIL CIRCUIT TESTER MAY BE USED AS AN ALTERNATE TEST METHOD FOR LIGHT FIXTURES. PIGTAIL TEST IS AS FOLLOWS: HOT IN BASE OF SOCKET TO GROUNDED FIXTURE CANOPY (LIGHT MUST LIGHT), NEUTRAL TO FIXTURE CANOPY (LIGHT MUST NOT LIGHT), AND A GROUND CHECK TO DETERMINE NO OPEN GROUND. FAILURE AT ANY FIXTURE REQUIRES REPAIR AND RETEST.

NOTE: ALL GROUND LEADS ARE SECURED TOGETHER AND BONDED TO THE JUNCTION BOXES W/ THE LARGEST SIZE CONDUCTOR IN BOX.

(ALL REQUIRED JUNCTION BOXES ARE SHIPPED LOOSE IN THE SET-UP KIT)

NOTES:

1. ALL ELECTRICAL WIRING CONNECTIONS TO BE MADE INSIDE LISTED JUNCTION BOX(S) IN COMPLIANCE WITH N.E.C. – 2005
2. WIRING IN LISTED JUNCTION BOX(S) NOT TO EXCEED CAPACITY OF THE JUNCTION BOX(S) PER N.E.C. – 2005.
3. WIRING TO BE PROTECTED AND SECURED AT MARRIAGE WALL JOISTS WITH WIRE PROTECTOR PLATES INCLUDED IN SET-UP KIT.
4. ELECTRICAL CROSSOVER WIRING TO BE DONE ONLY BY QUALIFIED PERSONNEL. MATCHING IDENTIFIED CIRCUIT WIRING FROM EACH SECTION OF MULTIPLE WIDE HOMES.
5. AFTER WIRING CONNECTIONS HAVE BEEN MADE, REPLACE COVER ON JUNCTION BOX(S), AND REPAIR ANY CUTS OR VOIDS IN THE BOTTOM BOARD WITH DUCT TAPE.

JACOBSEN HOMES
P.O. BOX 368
SAFETY HARBOR, FLORIDA 34695
PHONE (813) 726-1138

NOTICE:
THESE SPECIFICATIONS AND DRAWINGS ARE ORIGINAL, PROPRIETARY, AND CONFIDENTIAL MATERIALS OF JACOBSEN MANUFACTURING INC. SUCH MATERIALS ARE PROVIDED TO THE RECIPIENT FOR SPECIFIC PURPOSES AND MUST BE KEPT CONFIDENTIAL AND SECRET FROM OTHERS.

DRAWN BY: D.M.T.	DATE: 05-25-06	REV. LETTER: C (09-29-08)
DRAWING TITLE: ELECTRICAL CROSS-OVER		
DRAWING NUMBER: SU-09-0010		

MOBILE HOME SET-UP/ELECTRICAL

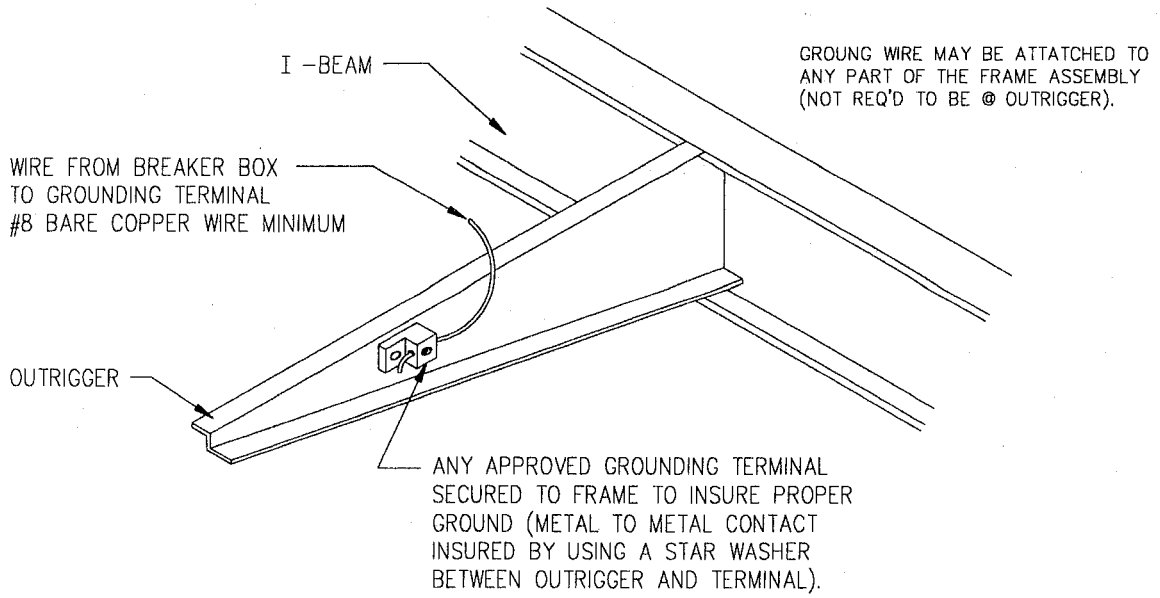

TYPICAL ELECTRICAL GROUND

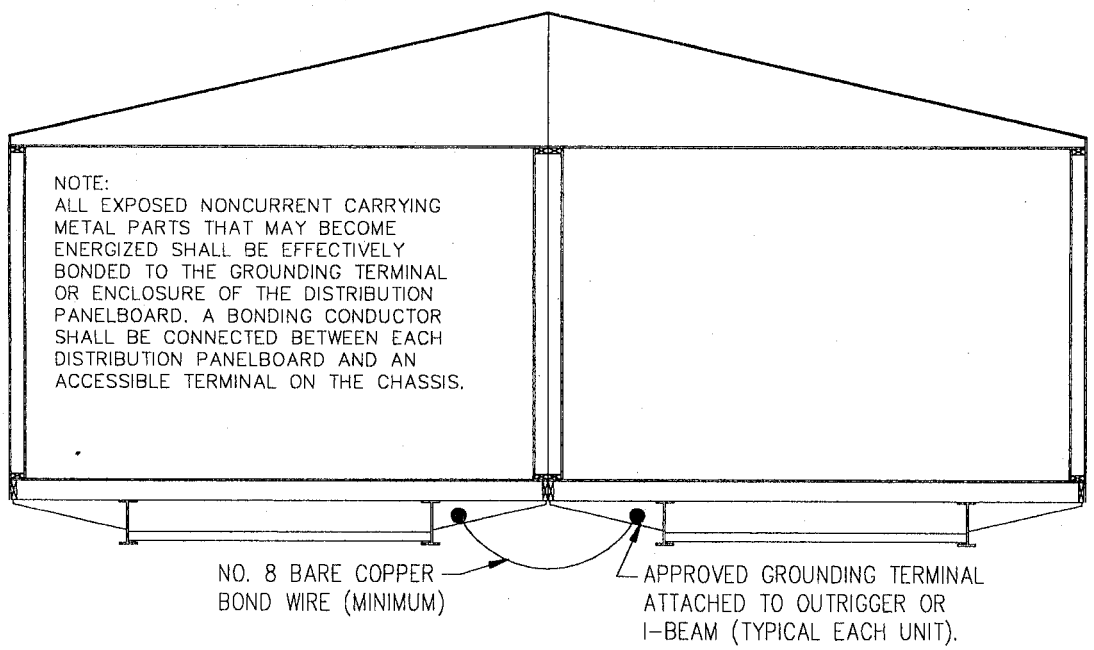

TYPICAL ELECTRICAL BONDING

GROUNDING AND CONTINUITY TEST

THE GROUNDING CONTINUITY TEST MUST BE PERFORMED BEFORE THE FEEDER CONDUCTORS ARE CONNECTED. PERFORM THE FOLLOWING TEST AFTER ALL STRUCTURAL ASSEMBLY, METAL AND TRIM INSTALLATION IS FINISHED:

A. CONNECT ONE CLIP OF A FLASHLIGHT CONTINUITY TESTER TO A CONVENIENT GROUND (METAL SKIN, WINDOW FRAME ON METAL SKINNED UNITS, FLOOR DUCT RISER, SCREW HEAD ON RECEPTACLE OR SWITCH PLATE, ETC.) AND TOUCH THE OTHER CLIP TO EACH LIGHT FIXTURE CANOPY (WHERE LIGHT IS MOUNTED TO CEILING OR WALL). THE CONTINUITY TESTER SHOULD LIGHT IF EACH FIXTURE IS PROPERLY GROUNDED.

B. REPEAT THESE PROCEDURES FOR ALL DIRECT WIRED APPLIANCES AND FIXTURES.

C. USING THE SAME PROCEDURES, CHECK THE CONTINUITY BETWEEN THE FOLLOWING:
   1. BETWEEN METAL ROOF AND STEEL FRAME.
   2. BETWEEN METAL SKIN AND STEEL FRAME.
   3. BETWEEN STEEL FRAME AND GAS PIPING.

D. ANY LOSS OF GROUNDING CONTINUITY FOUND IN THE ABOVE WILL REQUIRE INVESTIGATION, CORRECTION, AND RETESTING FOR CONTINUITY.

JACOBSEN HOMES

P.O. BOX 368
SAFETY HARBOR, FLORIDA 34695
PHONE (727) 726-1138

NOTICE:
THESE SPECIFICATIONS AND DRAWINGS ARE ORIGINAL, PROPRIETARY, AND CONFIDENTIAL MATERIALS OF JACOBSEN MANUFACTURING INC. SUCH MATERIALS ARE PROVIDED TO THE RECIPIENT FOR SPECIFIC PURPOSES AND MUST BE KEPT CONFIDENTIAL AND SECRET FROM OTHERS.

DRAWN BY: S.A.	DATE: 6-6-94	REV. LETTER:
DRAWING TITLE: TYPICAL ELECTRICAL GROUND		—
DRAWING NUMBER: SU-09-0020		

EXTERIOR LIGHT FIXTURE INSTALLATION

BE SURE ELECTRICAL SERVICE IS DISCONNECTED BEFORE COMING IN CONTACT WITH ELECTRICAL CONDUCTORS

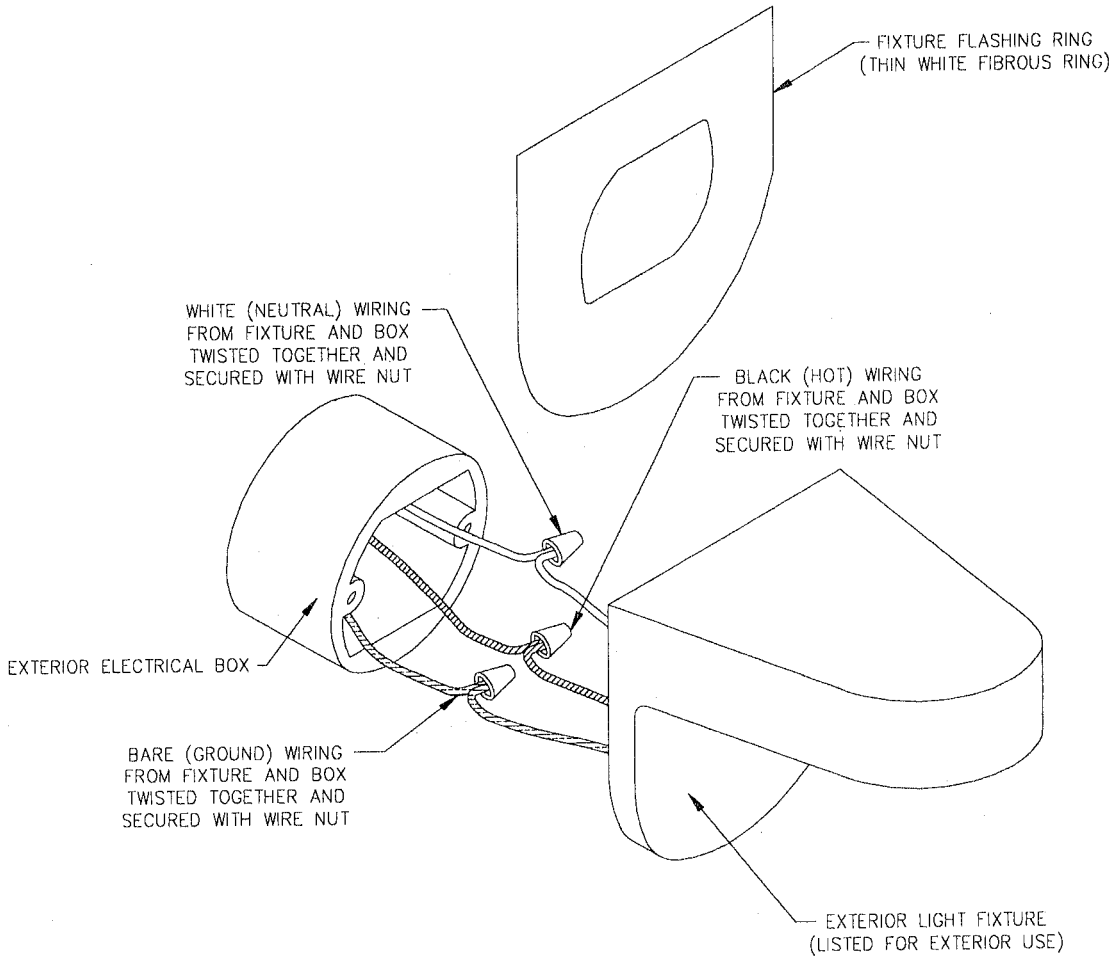

BEFORE ELECTRICAL SERVICE IS CONNECTED TO THE HOME, INSPECT THE EXTERIOR OF THE HOME AND LOCATE ALL THE EXTERIOR LIGHT LOCATIONS TO BE INSTALLED ON SITE. (ALL EXTERIOR LIGHT FIXTURES IN PORCH AND OTHER AREAS NOT ALONG THE EXTERIOR WALL AREAS OF THE HOME ARE INSTALLED AT THE FACTORY). THE EXTERIOR LIGHT LOCATIONS CAN BE IDENTIFIED AS EXTERIOR ELECTRICAL BOXES IN THE WALLS USUALLY LOCATED ADJACENT TO EXTERIOR DOORS THAT ARE COVERED WITH BLANK (SOLID) COVERS. TO INSTALL THE EXTERIOR LIGHT FIXTURES, REMOVE THE BLANK COVERS FROM THE ELECTRICAL BOXES AND FEED THE THREE WIRES (IDENTIFIED IN THE DETAIL ABOVE) THROUGH THE FIXTURE FLASHING RING BEFORE THE CONNECTIONS OF THE CONDUCTORS ARE MADE. THE FIXTURE FLASHING RINGS MUST EXTEND FROM THE OPENING OF THE ELECTRICAL BOX TO THE OUTERMOST EDGES OF THE EXTERIOR LIGHT FIXTURE (EXCESS AMOUNT OF THE FLASHING RING MAY BE TRIMMED OFF AFTER THE FIXTURE IS SECURED TO THE ELECTRICAL BOX). TO INSURE AGAINST THE POSSIBILITY OF AN ELECTRICAL SHOCK, ALL ELECTRICAL CONNECTIONS SHOULD BE DONE WITH THE ELECTRICAL SERVICE SHUT OFF TO THE HOME. THE WIRE NUTS REQUIRED FOR SECURING THE WIRES WILL BE FOUND INSIDE THE ELECTRICAL BOX FOR THE FIXTURE (THESE WIRE NUTS ARE INSTALLED AT THE FACTORY TO CAP THE CONDUCTORS IN THE ELECTRICAL BOX). THE FIXTURE FLASHING RING IS LOCATED IN THE SHIPPING KIT INSIDE THE HOME.

JACOBSEN HOMES

P.O. BOX 368
SAFETY HARBOR, FLORIDA 34695
PHONE (727) 726-1138

NOTICE:
THESE SPECIFICATIONS AND DRAWINGS ARE ORIGINAL, PROPRIETARY, AND CONFIDENTIAL MATERIALS OF JACOBSEN MANUFACTURING INC. SUCH MATERIALS ARE PROVIDED TO THE RECIPIENT FOR SPECIFIC PURPOSES AND MUST BE KEPT CONFIDENTIAL AND SECRET FROM OTHERS.

DRAWN BY: S.A.	DATE: 6-6-94	REV. LETTER:
DRAWING TITLE: LIGHT FIXTURE INSTALLATION		—
DRAWING NUMBER: SU-09-0030		

MOBILE HOME SET-UP

PLUMBING CONNECTIONS

CHECK WATER AND DRAIN LINES FOR ANY CONNECTIONS THAT MAY HAVE COME LOOSE DURING SHIPMENT.

SHOULD YOUR HOME NOT BE EQUIPPED WITH A MASTER SHUT-OFF VALVE, ONE MUST BE INSTALLED BETWEEN THE HOME AND THE WATER SUPPLY.

THE WATER SUPPLY SYSTEM IS DESIGNED FOR A MAXIMUM INLET WATER PRESSURE OF 80 PSI. IF THE LOCAL WATER SUPPLY PRESSURE TO WHICH THE HOME IS BEING CONNECTED EXCEEDS 80 PSI, A PRESSURE REDUCING VALVE SHOULD BE INSTALLED TO LIMIT THE SUPPLY PRESSURE.

WHEN HOMES ARE SET IN AREAS SUBJECT TO FREEZING THE EXPOSED WATER SUPPLY LINES MUST BE PROTECTED. AN ELECTRICAL RECEPTACLE IS LOCATED ON THE UNDERSIDE OF THE HOME NEAR THE WATER INLET, AND NEAR ANY CROSSOVER LOCATION WHERE THE WATER LINES ARE EXPOSED. THESE ELECTRICAL RECEPTACLES ARE FOR THE CONNECTION OF AN ELECTRICAL HEAT TAPE. HEAT TAPE USED MUST BE LISTED FOR USE WITH MOBILE HOMES.

FOR MULTIPLE SECTION HOMES WITH PLUMBING IN MORE THAN ONE SECTION, LOCATE AND CONNECT THE WATER CROSSOVERS LOCATED UNDER THE FLOOR ALONG THE MARRIAGE LINE BETWEEN THE SECTIONS. TURN THE WATER SUPPLY ON AND CHECK FOR LEAKAGE.

CAUTION: DO NOT TURN THE POWER ON TO THE WATER HEATER UNTIL THE TANK IS FULL OF WATER.

CONNECT DRAIN DROP OUTS TO COMPLETE ALL FIXTURE DRAINS AND MAIN DRAIN. BE SURE ALL CONNECTIONS ARE MADE TO COMPLY WITH LOCAL PLUMBING CODES.

GAS PIPING

HOMES WITH GAS PIPING HAVE BEEN FACTORY TESTED FOR LEAKS, HOWEVER, BEFORE CONNECTING THE GAS SUPPLY TO THE SYSTEM ANOTHER PRESSURE TEST IS REQUIRED TO INSURE THAT THERE ARE NO LEAKS AFTER THE HOME HAS BEEN TRANSPORTED AND SET-UP.

1. CLOSE OFF ALL THE GAS APPLIANCE SHUT OFF VALVES.
2. ATTACH THE GAS TEST FITTING GAUGE.
3. PRESUREIZE THE SYSTEM UNTIL 3 PSI OF AIR PRESSURE IS REACHED.
4. PRESSURE MUST BE MAINTAINED FOR 10 MINUTES WITHOUT ANY INDICATED PRESSURE LOSS.

CAUTION: DAMAGE MAY RESULT IF THE SYSTEM IS OVER PRESSUREIZED, THE GAS PIPING SUPPLY SYSTEM HAS BEEN DESIGNED FOR A MAXIMUM PRESSURE OF 14" WATER COLUMN (1/2 PSI) AND NOT LESS THAN 7" WATER COLUMN (1/4 PSI).

THE GAS PIPING SYSTEM IS DESIGNED TO USE EITHER LIQUIFIED PETROLEUM GAS OR NATURAL GAS.

BEFORE TURNING THE GAS ON:

1. BE SURE THE APPLIANCES IN YOUR HOME ARE DESIGNED FOR THE TYPE OF GAS BEING CONNECTED.
2. WHERE APPLICABLE ON MULTIPLE WIDE HOMES, LOCATE "QUICK-DISCONNECT" AND CONNECT. THE "QUICK-DISCONNECT" IS LOCATED UNDER THE FLOOR AT THE MARRIAGE LINE.
3. MAKE SURE ALL CONNECTIONS ARE TIGHT, AND ALL APPLIANCES ARE TURNED OFF.
4. AFTER THE GAS HAS BEEN CONNECTED AND TURNED ON, MAKE SURE ALL THE PILOT LIGHTS ARE LIT.

JACOBSEN HOMES
P.O. BOX 368
SAFETY HARBOR, FLORIDA 34695
PHONE (727) 726-1138

NOTICE:
THESE SPECIFICATIONS AND DRAWINGS ARE ORIGINAL, PROPRIETARY, AND CONFIDENTIAL MATERIALS OF JACOBSEN MANUFACTURING INC. SUCH MATERIALS ARE PROVIDED TO THE RECIPIENT FOR SPECIFIC PURPOSES AND MUST BE KEPT CONFIDENTIAL AND SECRET FROM OTHERS.

DRAWN BY: D.M.T.	DATE: 3-22-95	REV. LETTER: A (09-29-08)
DRAWING TITLE: PLUMB. CON. & GAS TEST		
DRAWING NUMBER: SU-11-0001		

PLUMBING TESTS

WATER SUPPLY PIPING TEST

ALL PIPING IN THE WATER DISTRIBUTION SYSTEM SHALL BE SUBJECTED TO A PRESSURE TEST. (MULTI-WIDE UNITS SEE SU-11-0020A FOR CROSS-OVER CONNECTION) PRIOR TO TESTING BE SURE ALL PLUMBING FIXTURES ARE CONNECTED EXCEPT WATER HEATER. CLOSE ALL FAUCETS AND RAISE AND HOLD THE FLOAT ARM IN THE TOILET TANK TO SHUT-OFF LEVEL. ALL SHUT-OFF VALVES IN PIPING SYSTEM ARE OPENED FULLY (EXCEPTIONS ARE DISHWASHER AND ICE-MAKER SHUT-OFF VALVE WHICH WILL REMAIN CLOSED) TAKE THE HOT AND COLD SUPPLY LINES AT WATER HEATER AND (FOR TEST PROCEDURE ONLY) CONNECT THEM TOGETHER. OR IF YOU CHOOSE YOU MAY TEST HOT LINES AND COLD LINES SEPARATELY (IN THIS CASE DO NOT CONNECT HOT TO COLD AT WATER HEATER). CONNECT TEST GAUGE AND THEN CONNECT SOURCE OF PRESSURE (AIR OR WATER MAY BE USED) TO PIPING SUPPLY SYSTEM. PRESSURIZE SYSTEM TO 100 PSI NO LESS AND THEN ISOLATE / DISCONNECT SOURCE OF PRESURE. 100 PSI MUST BE MAINTAINED FOR AT LEAST 15 MINUTES. IF GAUGE SHOWS A DROP IN PRESSURE THERE IS A LEAK IN THE SYSTEM THAT REQUIRES REPAIR. AFTER REPAIR IS MADE RETEST THE SYSTEM, 100 PSI MUST BE MAINTAINED FOR AT LEAST 15 MINUTES. DISCONNECT HOT FROM COLD SUPPLY LINE AT WATER HEATER, AND CONNECT TO WATER HEATER.

DRAINAGE SYSTEM TEST

CONNECT ALL DRAIN DROP OUTS TO COMPLETE ALL FIXTURE DRAINS AND MAIN DRAIN. BE SURE ALL CONNECTIONS ARE MADE PER ENCLOSED DRAIN LAYOUT OR TO COMPLY WITH LOCAL PLUMBING CODES. CAP OR PLUG THE MAIN DRAIN OUTLET. LOCATE THE LOWEST FIXTURE (USUALLY THE SHOWER), THIS WILL BE WHERE YOU NEED TO OBSERVE THE WATER LEVEL. INTRODUCE WATER INTO THE SYSTEM (SEE NOTE #2) UNTIL WATER REACHES DEPTH OF 2" MIN. IN LOWEST FIXTURE. THE TEST SHALL BE SUSTAINED FOR NO LESS THAN 15 MINUTES WITHOUT EVIDENCE OF LEAKS. VISUALLY CHECK ALL CONNECTIONS MADE ON-SITE FOR LEAKS (FACTORY CONNECTIONS HAVE ALREADY BEEN TESTED). IF WATER LEVEL IN LOWEST FIXTURE HAS NOT CHANGED WITHIN THE MINIMUM 15 MINUTES, AND THERE WAS NO EVIDENCE OF LEAKS AT FITTINGS, THEN THE DRAINAGE SYSTEM TEST IS COMPLETE. FAILURE TO MAINTAIN WATER LEVEL INDICATES A LEAK IN THE SYSTEM AND REQUIRES REPAIR AND RETESTING.

NOTES:

1. HOME SHALL BE IN A LEVEL POSITION.
2. INTRODUCE WATER TO SYSTEM AT SINK, SHOWER OR TUB. DO NOT INTRODUCE WATER TO SYSTEM AT TOILET BOWL FOR THIS MAY TRAP AIR WITHIN THE SYSTEM.

JACOBSEN HOMES
P.O. BOX 368
SAFETY HARBOR, FLORIDA 34695
PHONE (727) 726-1138

NOTICE:
THESE SPECIFICATIONS AND DRAWINGS ARE ORIGINAL, PROPRIETARY, AND CONFIDENTIAL MATERIALS OF JACOBSEN MANUFACTURING INC. SUCH MATERIALS ARE PROVIDED TO THE RECIPIENT FOR SPECIFIC PURPOSES AND MUST BE KEPT CONFIDENTIAL AND SECRET FROM OTHERS.

DRAWN BY: D.M.T.	DATE: 09-29-08	REV. LETTER:
DRAWING TITLE: PLUMBING TEST		—
DRAWING NUMBER: SU-11-0002		

MOBILE HOME SET-UP

SET-UP KIT PLUMBING FITTINGS

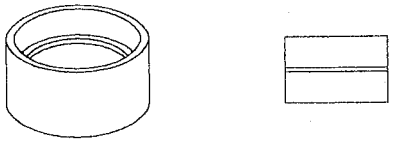

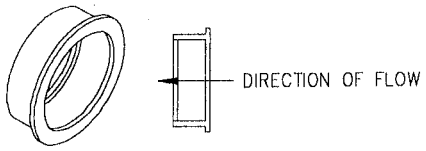

FITTING NAME:	
COUPLER	
SYMBOL	ORIENTATION / USE
COUPLING	PIPE SPLICING

FITTING NAME:	
REDUCER BUSHING	
SYMBOL	ORIENTATION / USE
BUSHING	REDUCE FITTING PIPE SIZE

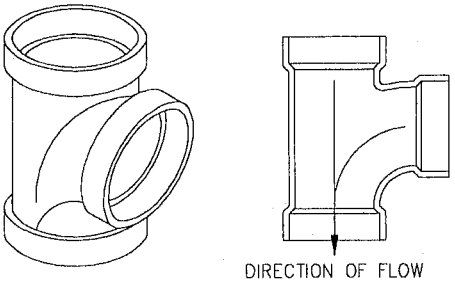

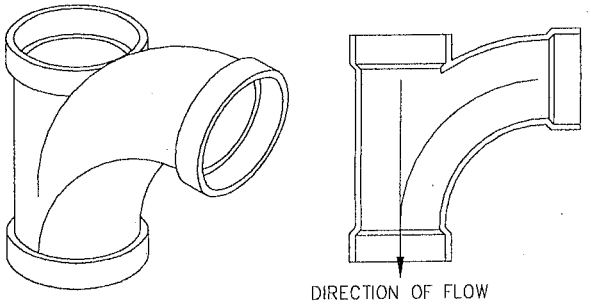

FITTING NAME:	
SANITARY TEE	
SYMBOL	ORIENTATION / USE
SAN. TEE	HORIZONTAL TO VERTICAL ONLY

FITTING NAME:	
LONG TURN TEE WYE	
SYMBOL	ORIENTATION / USE
LTTY	MAY BE USED IN ANY ORIENTATION

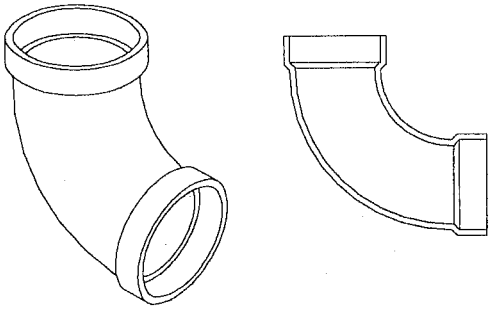

FITTING NAME:	
LONG TURN 90° ELL	
SYMBOL	ORIENTATION / USE
90° ELL	MAY BE USED IN ANY ORIENTATION

SET-UP INSTRUCTION SYMBOLS

- = 1 1/2" DROP
- = 1 1/2" DRY VENT
- = 2" DROP
- = 2" WET VENT
- = 3" DROP
- = 3" MAIN DRAIN
- = 1 1/2" DRAIN LINE
- = 2" DRAIN LINE
- = 3" DRAIN LINE

NOTE: USE A GOOD QUALITY CLEANER AND CEMENT LISTED FOR USE WITH PVC PIPING CONNECTIONS. BE SURE TO FOLLOW THE MANUFACTURERS INSRUCTIONS ON THE CONTAINERS.

CHECK THE INSTALLATION INSTRUCTIONS FOR MATERIALS REQUIRED AND PLACEMENT OF FITTINGS, NOTE AS SHOWN IN THE DETAILS THE DIRECTION OF FLOW FOR FITTINGS.

ALL PIPING REQUIRED TO FIT BETWEEN FITTINGS IS INCLUDED IN THE SET-UP MATERIALS. THE LENGTHS OF PIPE SHOULD BE CHECKED BEFORE CUTTING TO ENSURE THAT PROPER DROP-OFF IS REMAINING FOR COMPLETION OF PIPE RUNS.

DRY FITTING ALL PARTS TOGETHER IS RECOMENDED BEFORE ANY FITTING AND PIPE JOINT IS GLUED.

JACOBSEN HOMES

P.O. BOX 368
SAFETY HARBOR, FLORIDA 34695
PHONE (727) 726-1138

NOTICE:
THESE SPECIFICATIONS AND DRAWINGS ARE ORIGINAL, PROPRIETARY, AND CONFIDENTIAL MATERIALS OF JACOBSEN MANUFACTURING INC. SUCH MATERIALS ARE PROVIDED TO THE RECIPIENT FOR SPECIFIC PURPOSES AND MUST BE KEPT CONFIDENTIAL AND SECRET FROM OTHERS.

DRAWN BY: S.A.	DATE: 6-6-94	REV. LETTER: —
DRAWING TITLE: SET-UP KIT. PL. FITTINGS		
DRAWING NUMBER: SU-11-0010		

MOBILE HOME SET-UP

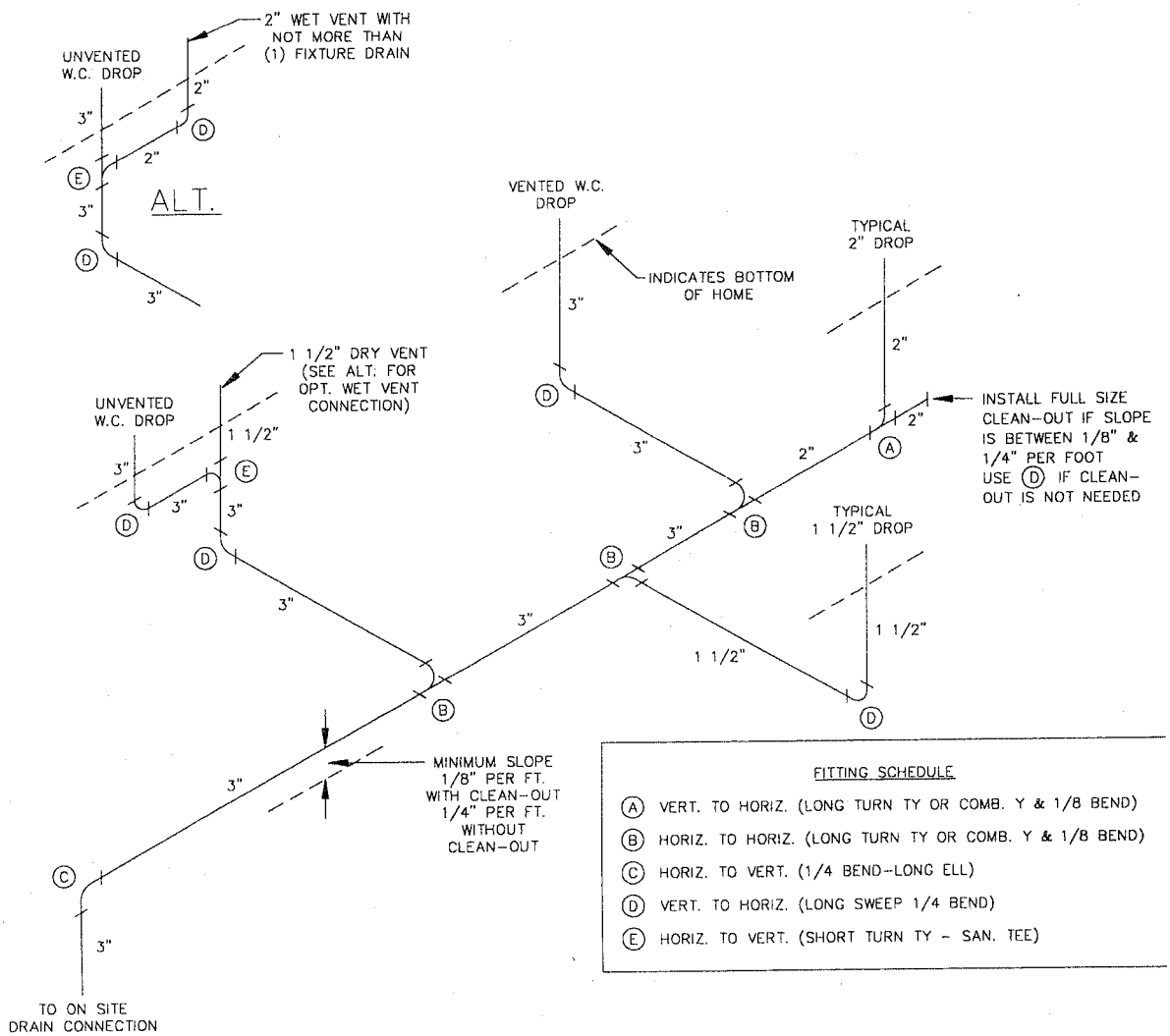

FITTING SCHEDULE

- (A) VERT. TO HORIZ. (LONG TURN TY OR COMB. Y & 1/8 BEND)
- (B) HORIZ. TO HORIZ. (LONG TURN TY OR COMB. Y & 1/8 BEND)
- (C) HORIZ. TO VERT. (1/4 BEND-LONG ELL)
- (D) VERT. TO HORIZ. (LONG SWEEP 1/4 BEND)
- (E) HORIZ. TO VERT. (SHORT TURN TY - SAN. TEE)

TYPICAL ON SITE DRAIN CONNECTIONS

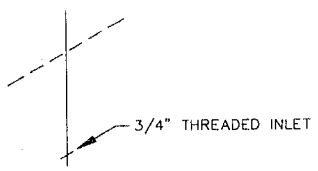

FRESH WATER INLET FOR SINGLE WIDES AND MULTI-WIDES WITH PLUMBING IN ONE SECTION ONLY

NOTE:
THE TWO EXAMPLES SHOWN ARE TYPICAL FOR MOST MODELS. SOME MODELS DEPENDING ON THE PLUMBING LAY-OUT MAY HAVE A COMBINATION OF BOTH OF THE EXAMPLES SHOWN.

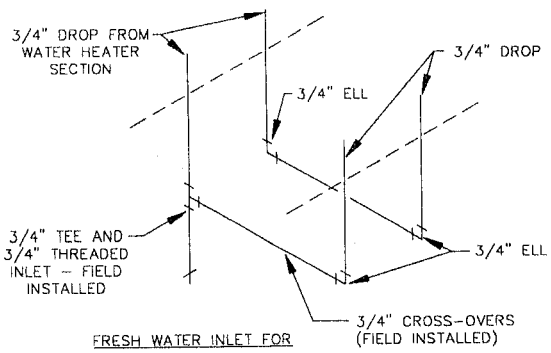

FRESH WATER INLET FOR MULTI-WIDES WITH PLUMBING IN MORE THAN ONE SECTION

TYPICAL FRESH WATER ENTRANCES

JACOBSEN HOMES
P.O. BOX 368
SAFETY HARBOR, FLORIDA 34695
PHONE (727) 726-1138

NOTICE:
THESE SPECIFICATIONS AND DRAWINGS ARE ORIGINAL, PROPRIETARY, AND CONFIDENTIAL MATERIALS OF JACOBSEN MANUFACTURING INC. SUCH MATERIALS ARE PROVIDED TO THE RECIPIENT FOR SPECIFIC PURPOSES AND MUST BE KEPT CONFIDENTIAL AND SECRET FROM OTHERS.

DRAWN BY: S.A.	DATE: 6-6-94	REV. LETTER: —
DRAWING TITLE: DRAIN SET-UP		
DRAWING NUMBER: SU-11-0005		

WATER LINE CROSS-OVER

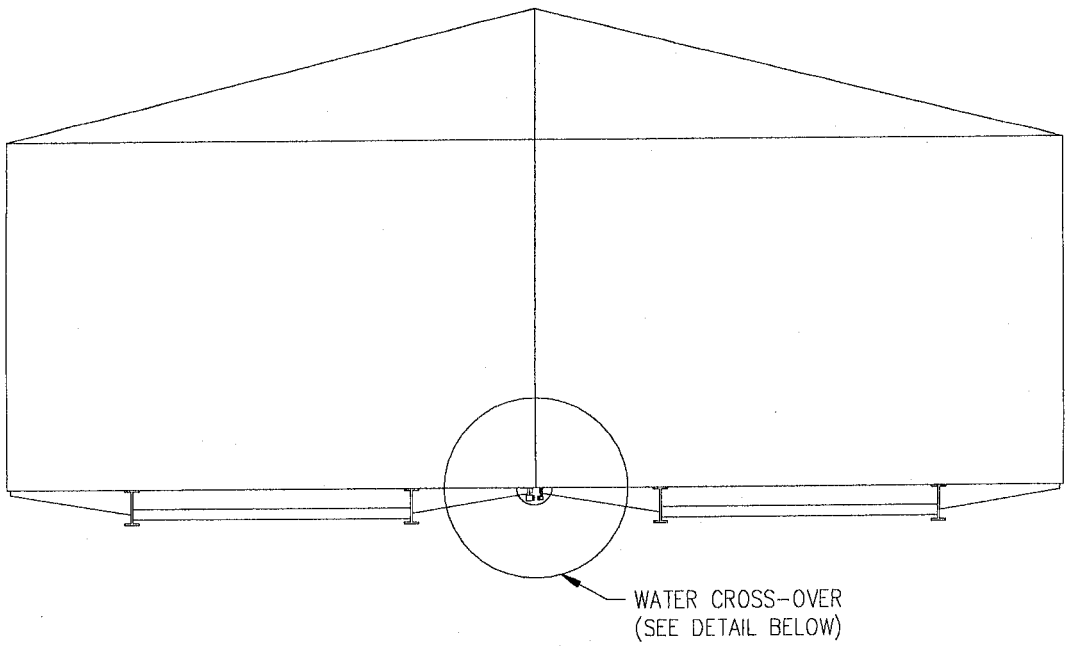

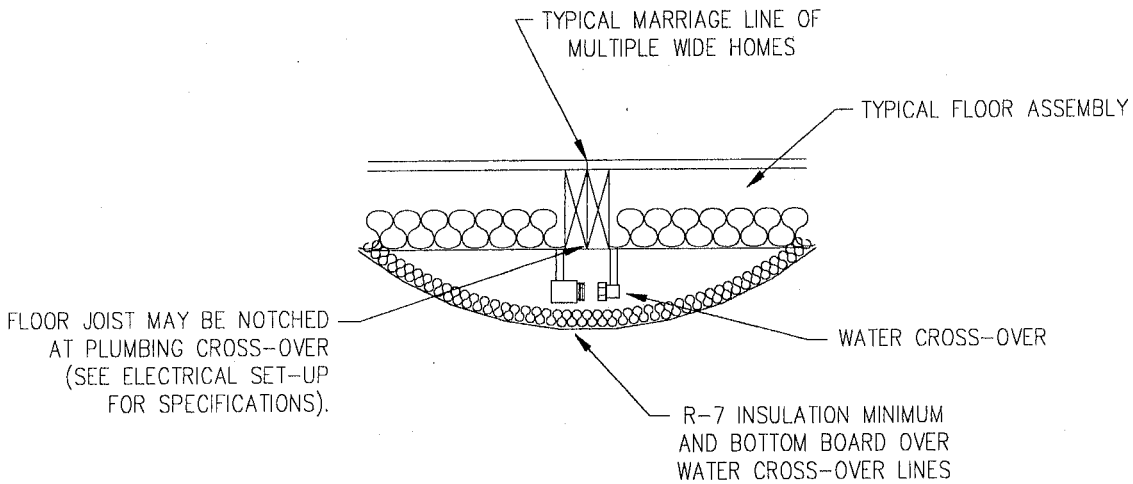

NOTE: NO HEAT TAPE RECEPT. REQUIRED AT INSULATED WATER CROSS-OVER.

NOTES:

1. CONNECT WATER LINES TOGETHER AT ALL CROSSOVER LOCATIONS.
2. INSTALL R-7 MINIMUM INSULATION BLANKET OVER THE WATER CROSS-OVER LINES AND SECURE INTO PLACE WITH DUCT TAPE.
3. PLACE A PIECE OF BOTTOM BOARD MATERIAL LARGE ENOUGH TO COVER WATER CROSS-OVER LINES AND INSULATION AND SECURE TO FLOOR FRAMING MEMBERS WITH 1" X 1" X 16 GA. STAPLES MINIMUM AT EACH FRAMING MEMBER, AND TAPE OVER SEAMS WITH CLOTH DUCT TAPE OR EQUAL.

JACOBSEN HOMES
P.O. BOX 368
SAFETY HARBOR, FLORIDA 34695
PHONE (813) 726-1138

NOTICE:
THESE SPECIFICATIONS AND DRAWINGS ARE ORIGINAL, PROPRIETARY, AND CONFIDENTIAL MATERIALS OF JACOBSEN MANUFACTURING INC. SUCH MATERIALS ARE PROVIDED TO THE RECIPIENT FOR SPECIFIC PURPOSES AND MUST BE KEPT CONFIDENTIAL AND SECRET FROM OTHERS.

DRAWN BY: C.L.Y.	DATE: 10-23-95	REV. LETTER: A
DRAWING TITLE: WATER CROSS-OVER		
DRAWING NUMBER: SU-11-0020		

MOBILE HOME SET-UP

6. A.C. CONNECTIONS

JACOBSEN MOBILE HOMES ARE MADE AIR CONDITIONER READY, WHICH MEANS THE REGISTERS, SUPPLY DUCTS, AND RETURN AIR FACILITIES ARE ALREADY INSTALLED IN YOUR HOME. IN A MULTI-SECTION HOME THERE IS ONE SUPPLY DROP PER SECTION, AND ONE RETURN AIR DROP FOR THE ENTIRE HOME. CONNECT THE RETURN AIR DROP TO THE INTAKE SIDE OF THE AIR CONDITIONING UNIT, AND CONNECT THE SUPPLY DROPS REDUCER "Y" FITTING(S) (i.e., (1) 12" TO (2) 10") TO THE BLOWER SIDE. FOR SINGLE UNIT HOMES, THERE IS ONE SUPPLY DROP, CONNECT THAT ONE DROP DIRECTLY TO THE BLOWER SIDE OF THE AIR CONDITIONING UNIT. ALL CONNECTIONS BETWEEN THE AIR CONDITIONER AND DROPS CAN BE MADE WITH INSULATED FLEXIBLE DUCT.

CHECK THESE ITEMS AFTER THE AIR CONDITIONER IS INSTALLED.

1. ALL DUCT WORK BELOW THE HOME IS INSULATED.
2. ALL SEAMS ARE SEALED.
3. ALL CONNECTIONS ARE INSULATED AND TIGHT FITTING.
4. CROSS-OVER DUCT MUST BE SUPPORTED EVERY 4'-0" O.C.

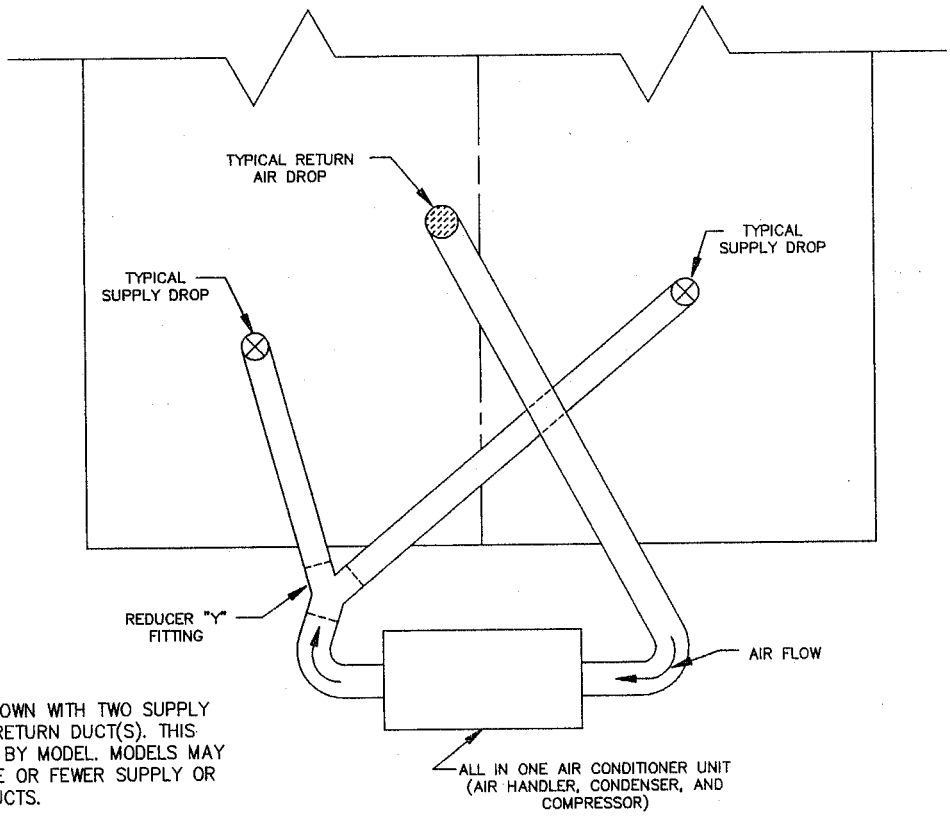

UNIT IS SHOWN WITH TWO SUPPLY AND ONE RETURN DUCT(S). THIS WILL VARY BY MODEL. MODELS MAY HAVE MORE OR FEWER SUPPLY OR RETURN DUCTS.

TYPICAL MULTIPLE SECTION A.C. CONNECTIONS

NOTE: ON SOME MODELS THE SUPPLY AND/OR RETURN AIR DROPS PROVIDED ON THE HOME MAY BE LOCATED DIRECTLY OVER THE RUNNING GEAR (TIRE AND/OR AXLE). ON HOMES WITH THE DROP LOCATIONS LOCATED ABOVE THE RUNNING GEAR IT IS NECESSARY TO REMOVE THE RUNNING GEAR BEFORE HOOKING UP THE SUPPLY AND/OR RETURN AIR DUCT FROM THE AIR CONDITIONER UNIT TO THE HOME.

JACOBSEN HOMES

P.O. BOX 368
SAFETY HARBOR, FLORIDA 34695
PHONE (727) 726-1138

NOTICE:
THESE SPECIFICATIONS AND DRAWINGS ARE ORIGINAL, PROPRIETARY, AND CONFIDENTIAL MATERIALS OF JACOBSEN MANUFACTURING INC. SUCH MATERIALS ARE PROVIDED TO THE RECIPIENT FOR SPECIFIC PURPOSES AND MUST BE KEPT CONFIDENTIAL AND SECRET FROM OTHERS.

DRAWN BY: O.A.	DATE: 06-06-94	REV. LETTER:
DRAWING TITLE: DOUBLE WIDE A.C. CONNECTIONS		A
DRAWING NUMBER: SU-13-0001		(09-30-08)

MOBILE HOME SET-UP

USE THE FOLLOWING INSTRUCTIONS WHERE APPLIED TO DUCTWORK PROVIDED BY JACOBSEN HOMES FOR AIR CONDITIONER INSTALLATION. CHECK THE MANUFACTURERS INSTALLATION INSTRUCTIONS FOR ALL ADDITIONAL DUCTS USED DURING AIR CONDITIONER HOOK-UP FOR RECOMMENDED INSTALLATION PROCEDURES FOR THE TYPE DUCT BEING USED.

METHOD PRESSURE LIMITATIONS	DETAILS	CONNECTIONS	SPLICES
TAPE ONLY (FOR LOW PRESSURE NOT TO EXCEED 2 IN. W.G.)	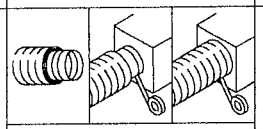 CONNECTING 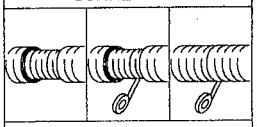 SPLICING	A) FOLD BACK JACKET AND INSULATION FROM END OF DUCT EXPOSING CORE. B) SLIP CORE OVER FITTING AT LEAST 1 1/2 INCHES. C) APPLY DUCT TAPE* AROUND CORE AND FITTING WITH AN EQUAL TAPE WIDTH ON EACH. D) PULL BACK INSULATION AND JACKET OVER FITTING. E) APPLY DUCT TAPE* AROUND JACKET AND FITTING WITH AN EQUAL TAPE WIDTH ON EACH.	A) FOLD BACK JACKET AND INSULATION FROM END OF DUCTS EXPOSING CORE. B) INSERT ONE CORE INTO THE OTHER ABOUT THREE INCHES. C) APPLY DUCT TAPE* AROUND OUTSIDE OF CORE EDGE WITH EQUAL WIDTH ON EACH CORE. D) BUTT INSULATION AND PULL JACKET FROM ONE DUCT OVER OTHER DUCT. E) APPLY DUCT TAPE* AROUND OUTSIDE OF JACKET EDGE WITH EQUAL TAPE WIDTH ON EACH JACKET.
CLAMP ONLY METAL CLAMP (FOR LOW TO MEDIUM PRESSURE NOT TO EXCEED 4 IN. W.G.) SEE PRESURE LIMITATIONS FOR PLASTIC CLAMPS**	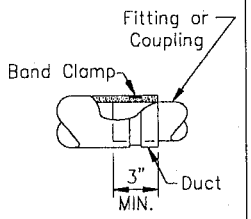 CONNECTING OR SPLICING	A) SLIP DUCT OVER FITTING AT LEAST THREE INCHES. B) PLACE CLAMP** AROUND DUCT AT FITTING AND TIGHTEN WITH APPROPRIATE TOOL UNTIL ALL MATERIAL UNDER CLAMP HAS BEEN COMPRESSED AND CLAMPING PRESSURE IS ASSURED. C) CHECK CONNECTION BY PULLING ON DUCT WITH A FORCE OF AT LEAST 25 LBS. TO INSURE DUCT HAS BEEN ADEQUATELY CLAMPED.	A) FOLLOW AS DIRECTED UNDER 'CONNECTIONS' BUTTING TWO DUCTS TOGETHER ON A STANDARD SHEET METAL COUPLING AT LEAST SIX INCHES IN LENGTH.
TAPE & CLAMP (FOR LOW, MEDIUM OR HIGH PRESSURE NOT TO EXCEED 10 IN. W.G.) SEE PRESURE LIMITATIONS FOR PLASTIC CLAMPS**	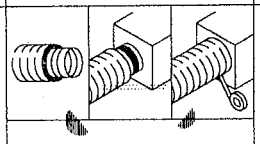 CONNECTING 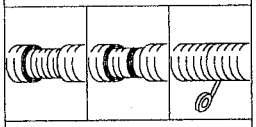 SPLICING	A) PULL BACK JACKET AND INSULATION FROM END OF DUCT EXPOSING CORE. B) SLIP CORE OVER FITTING AT LEAST 1 1/2 INCHES. C) APPLY DUCT TAPE* AROUND CORE AND FITTING WITH EQUAL TAPE WIDTH ON EACH. D) PLACE CLAMP** AROUND TAPE AND CORE AND TIGHTEN WITH APPROPRIATE TOOL. E) PULL BACK INSULATION AND JACKET AND APPLY DUCT TAPE* AROUND JACKET AND FITTING. WITH TABBED DUCTBOARD FITTINGS, OUTER JACKET MAY BE 'DIAPERED' INSTEAD OF TAPED (SEE STEP F). F) PULL JACKET OVER RING, THROUGH HOLE, AND FOLD UP WITH TABS.	A) BUTT TWO CORES TOGETHER ON A SIX INCH METAL COUPLING AND FOLLOW DIRECTIONS UNDER 'CONNECTIONS'.

* DUCT TAPE: USE A MINIMUM OF ONE WRAP OF 2 INCH OR TWO WRAPS OF 1 1/2 INCH WIDTH OF TYPE SHUFORD #PC622, TUCK #92T, ARNO #C520, POLYKEN #222, OR NASHUA #357.

** PLASTIC CLAMPS: PLASTIC CLAMPS ARE NOT RECOMMENDED FOR PRESSURES EXCEEDING 4 IN. W.G. (DIAMETERS 3" – 10") AND 2 IN. W.G. (DIAMETERS 12" AND OVER) TO ACHIEVE PROPER TENSIONING OF PLASTIC CLAMP, SET CORRESPONDING TOOL AT MAXIMUM TENSION SETTING. APPROVED TYPES: PANDUIT TYPE PLT-H (TOOL G); CATAMOUNT L-175 (TOOL L-300); OR TYTON T-150 (TOOL T-150).

JACOBSEN HOMES
P.O. BOX 368
SAFETY HARBOR, FLORIDA 34695
PHONE (727) 726-1138

NOTICE:
THESE SPECIFICATIONS AND DRAWINGS ARE ORIGINAL, PROPRIETARY, AND CONFIDENTIAL MATERIALS OF JACOBSEN MANUFACTURING INC. SUCH MATERIALS ARE PROVIDED TO THE RECIPIENT FOR SPECIFIC PURPOSES AND MUST BE KEPT CONFIDENTIAL AND SECRET FROM OTHERS.

DRAWN BY: S.A.	DATE: 6-6-94	REV. LETTER: —
DRAWING TITLE: MOBILE HOME SET-UP DUCTWORK		
DRAWING NUMBER: SU-13-0010		

ELECTRIC CLOTHES DRYER VENTING

IMPORTANT – BEFORE DRYER IS USED IT MUST BE VENTED TO THE OUTSIDE OF THE HOME. THE VENT MUST NOT TERMINATE INSIDE THE SKIRTED AREA UNDER THE HOME, THIS WOULD RESULT IN EXCESSIVE HUMIDITY IN THE HOME.

HOMES SET UP TO RECEIVE A DRYER ARE EQUIPPED WITH A VENT HOLE PRE-DRILLED THROUGH THE FLOOR AT THE DRYER LOCATION. TO COMPLETE THE DRYER EXHAUST SYSTEM, FOLLOW THESE PROCEDURES:

1. REMOVE THE DRYER VENT ACCESS HOLE COVER.
2. CUT DRYER VENT DUCT TO THE PROPER LENGTH, AND CHECK FOR OBSTRUCTIONS. THEN CONNECT TO DRYER IN ACCORDANCE WITH THE MANUFACTURERS INSTRUCTIONS.
3. SECURE THE VENT CAP TO THE OUTSIDE OF THE SKIRTING AT THE APPROPRIATE LOCATION.
4. SECURE THE END OF THE FLEXIBLE DRYER DUCT TO THE VENT CAP AT THE EXTERIOR OF THE HOME WITH CLAMPS. NOTE: DO NOT USE ANY SCREWS OR OTHER DEVICES THAT EXTEND INTO THE DUCT.
5. STRAP THE DRYER DUCT TO THE UNDERSIDE OF THE HOME TO PREVENT THE DUCT FROM COMING IN CONTACT WITH THE GROUND.
6. SEAL THE OPENINGS AROUND THE DUCT WHERE IT PASSES THROUGH THE FLOOR WITH CAULK OR DUCT TAPE, AND THE BOTTOM BOARD WITH DUCT TAPE.

JACOBSEN HOMES WILL NOT BE RESPONSIBLE FOR DAMAGE TO THE HOME RESULTING FROM FAILURE TO INSTALL THE DRYER EXHAUST SYSTEM IN ACCORDANCE WITH THE MANUFACTURERS INSTRUCTIONS AND THE INSTRUCTIONS LISTED ABOVE. NOTE: GAS DRYER INSTALLATION MUST BE DONE BY QUALIFIED PERSONNEL. THE CUTTING OF STRUCTURAL ELEMENTS OF THE HOME, SUCH AS RAFTERS OR FLOOR JOISTS TO EXPEDITE INSTALLATION IS PROHIBITED. ANY WEAKENING OF THE STRUCTURE RESULTING FROM SUCH CUTTING IS NOT THE RESPONSIBILITY OF JACOBSEN HOMES, AND MAY RESULT IN NEGATING YOUR WARRANTY.

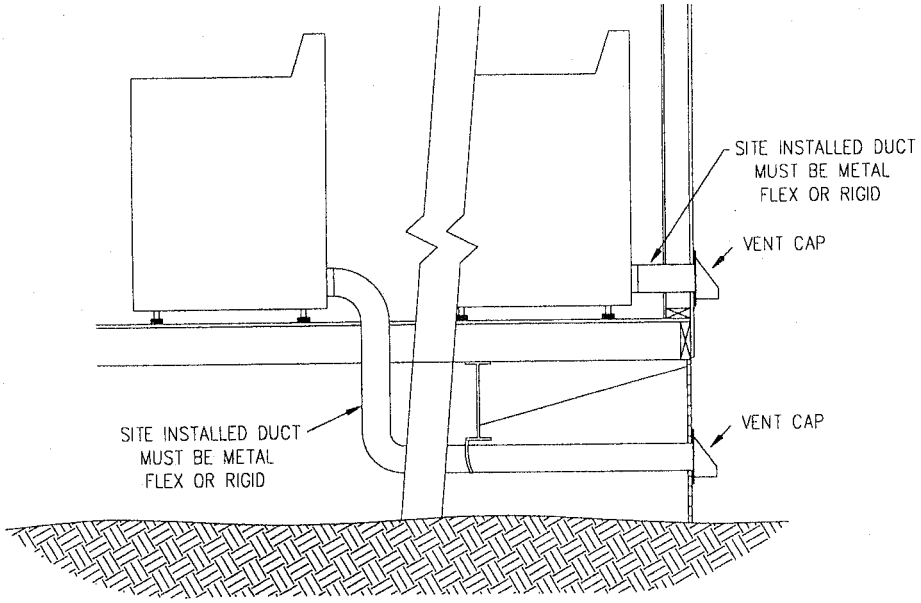

NOTES:

JACOBSEN HOMES
P.O. BOX 368
SAFETY HARBOR, FLORIDA 34695
PHONE (727) 726-1138

NOTICE:
THESE SPECIFICATIONS AND DRAWINGS ARE ORIGINAL, PROPRIETARY, AND CONFIDENTIAL MATERIALS OF JACOBSEN MANUFACTURING INC. SUCH MATERIALS ARE PROVIDED TO THE RECIPIENT FOR SPECIFIC PURPOSES AND MUST BE KEPT CONFIDENTIAL AND SECRET FROM OTHERS.

DRAWN BY: R.R.	DATE: 01-21-00	REV. LETTER:
DRAWING TITLE: ELECT. CLOTHES DRYER VENTING		A
DRAWING NUMBER: SU-15-0001		

SITE INSTALLED WATER HEATER PAN DRAIN

IMPORTANT – SET-UP OF THIS HOME REQUIRES THAT AN ON-SITE DRAIN BE INSTALLED FROM THE WATER HEATER PAN TO THE EXTERIOR OF THE HOME BEFORE THE WATER HEATER MAY BE USED.

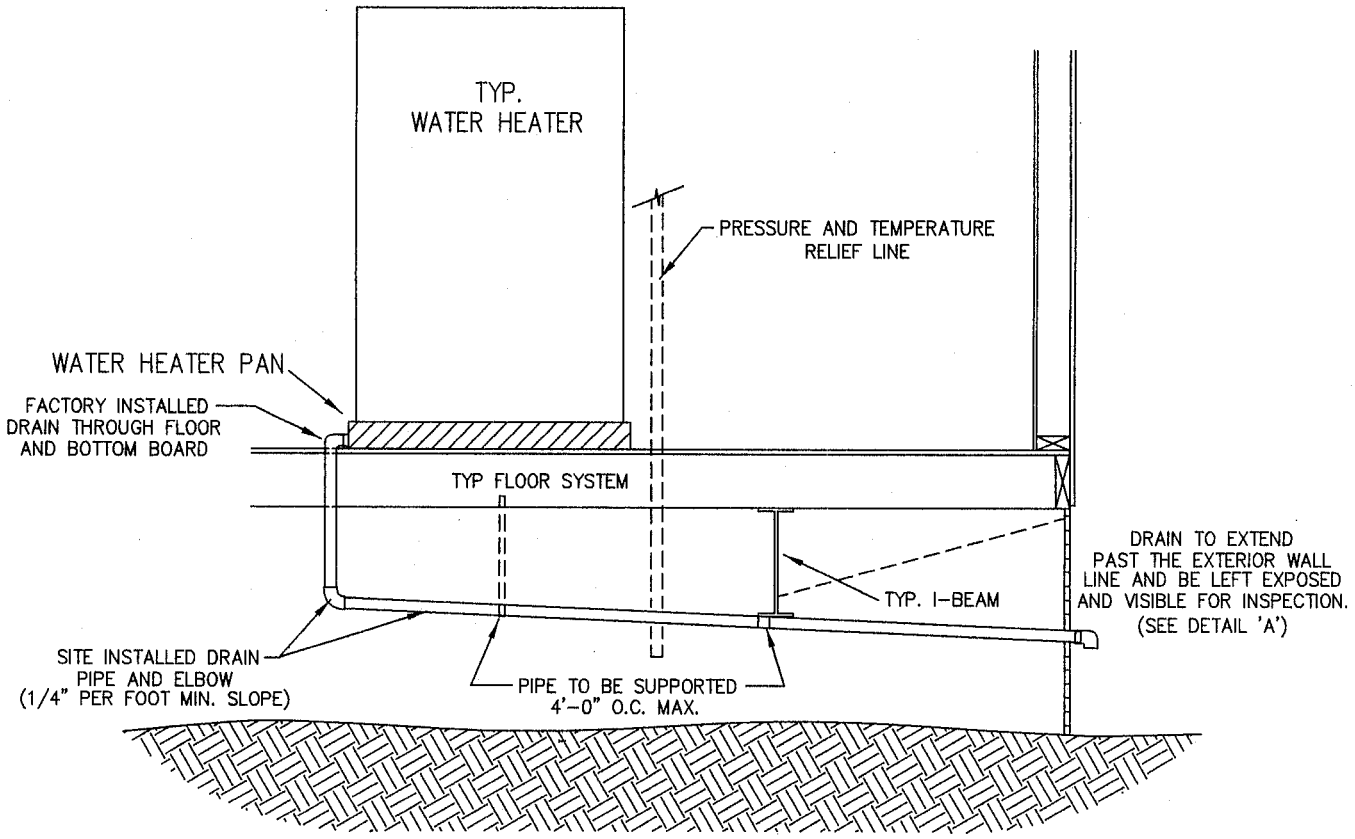

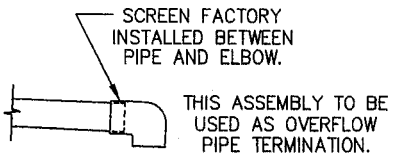

DETAIL 'A'

(DEALER IS RESPONSIBLE FOR THE SHIP LOOSE W/H PAN PIPE ON SITE INSTALLATION)

NOTES:

1.) SITE INSTALLED STRAPPING USED TO MAINTAIN THE REQUIRED SLOPE MAY BE SECURED TO FLOOR FRAMING AND/OR CHASSIS MEMBERS.

2.) SHIP LOOSE DRAIN LINE TO BE THE SAME MATERIALS AS THE FACTORY INSTALLED W/H PAN PIPE. ALL MATERIALS FOR THE COMPLETION OF THE ON SITE DRAIN WILL BE SHIPPED LOOSE.

3.) THE WATER HEATER PRESSURE AND TEMPERATURE RELIEF LINE MAY TERMINATE UNDER THE HOME.

JACOBSEN HOMES

P.O. BOX 368
SAFETY HARBOR, FLORIDA 34695
PHONE (727) 726-1138

NOTICE:
THESE SPECIFICATIONS AND DRAWINGS ARE ORIGINAL, PROPRIETARY, AND CONFIDENTIAL MATERIALS OF JACOBSEN MANUFACTURING INC. SUCH MATERIALS ARE PROVIDED TO THE RECIPIENT FOR SPECIFIC PURPOSES AND MUST BE KEPT CONFIDENTIAL AND SECRET FROM OTHERS.

DRAWN BY: M.T.	DATE: 03-08-07	REV. LETTER:
DRAWING TITLE: W/H PAN DRAIN		B
DRAWING NUMBER: SU-15-0003		

DOWN DRAFT RANGE VENTING

IMPORTANT – BEFORE RANGE IS USED IT MUST BE VENTED TO THE OUTSIDE OF THE HOME. THE VENT MUST NOT TERMINATE INSIDE THE SKIRTED AREA UNDER THE HOME, THIS WOULD RESULT IN EXCESSIVE HUMIDITY IN THE HOME.

HOMES WITH A DOWN DRAFT RANGE ARE EQUIPED WITH EXHAUST DUCT INSTALLED FROM THE RANGE THROUGH THE FLOOR, THE REMAINING DUCT IS SENT WITH THE HOME AND MUST BE INSTALLED ON SITE.

1. LOCATE DUCT DROP FROM RANGE. (MAY BE EXTENDING THROUGH BOTTOM BOARD, OR SEALED INSIDE)
2. CHECK DUCT PROVIDED FOR PROPER LENGTH, AND OBSTRUCTIONS. THEN CONNECT TO DUCT DROP FROM RANGE IN ACCORDANCE WITH THE MANUFACTURERS INSTRUCTIONS.
3. SECURE THE VENT CAP TO THE OUTSIDE OF THE SKIRTING AT THE APPROPRIATE LOCATION.
4. SECURE THE END OF THE DOWN DRAFT RANGE DUCT TO THE VENT CAP AT THE EXTERIOR OF THE HOME WITH CLAMPS OR SCREWS. NOTE: DO NOT USE ANY FASTENERS THAT CRUSH OR BLOCK THE DUCT.
5. STRAP THE DUCT TO THE UNDERSIDE OF THE HOME TO PREVENT THE DUCT FROM BENDING OR COMING IN CONTACT WITH THE GROUND.
6. SEAL THE OPENINGS AROUND THE DUCT WHERE IT PASSES THROUGH THE FLOOR WITH CAULK OR DUCT TAPE, AND THE BOTTOM BOARD WITH DUCT TAPE.

JACOBSEN HOMES WILL NOT BE RESPONSIBLE FOR DAMAGE TO THE HOME RESULTING FROM FAILURE TO INSTALL THE RANGE EXHAUST SYSTEM IN ACCORDANCE WITH THE MANUFACTURERS INSTRUCTIONS, AND THE INSTRUCTIONS LISTED ABOVE.

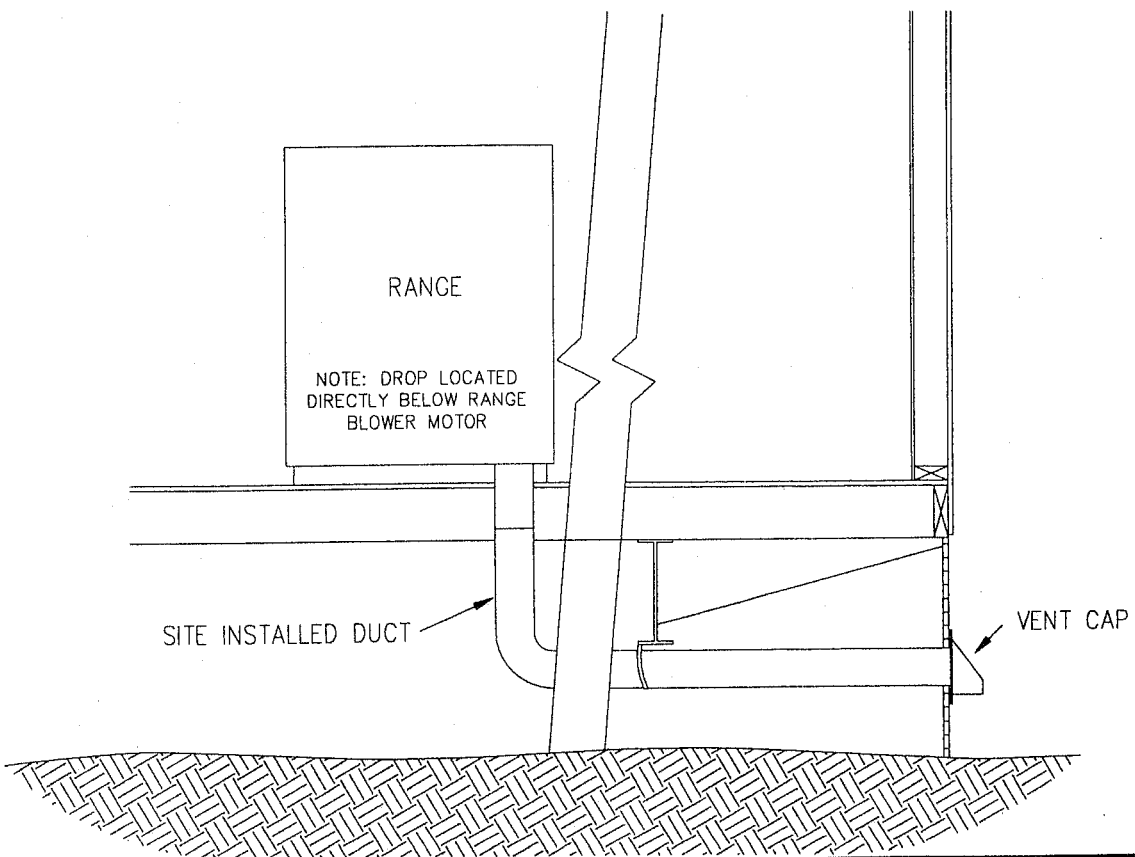

JACOBSEN HOMES
P.O. BOX 368
SAFETY HARBOR, FLORIDA 34695
PHONE (727) 726-1138

NOTICE:
THESE SPECIFICATIONS AND DRAWINGS ARE ORIGINAL, PROPRIETARY, AND CONFIDENTIAL MATERIALS OF JACOBSEN MANUFACTURING INC. SUCH MATERIALS ARE PROVIDED TO THE RECIPIENT FOR SPECIFIC PURPOSES AND MUST BE KEPT CONFIDENTIAL AND SECRET FROM OTHERS.

DRAWN BY: S.A.	DATE: 6-6-94	REV. LETTER:
DRAWING TITLE: DOWN DRAFT RANGE VENTING		—
DRAWING NUMBER: SU-15-0002		

BOTTOM BOARD P-TRAP ACCESS PANELS

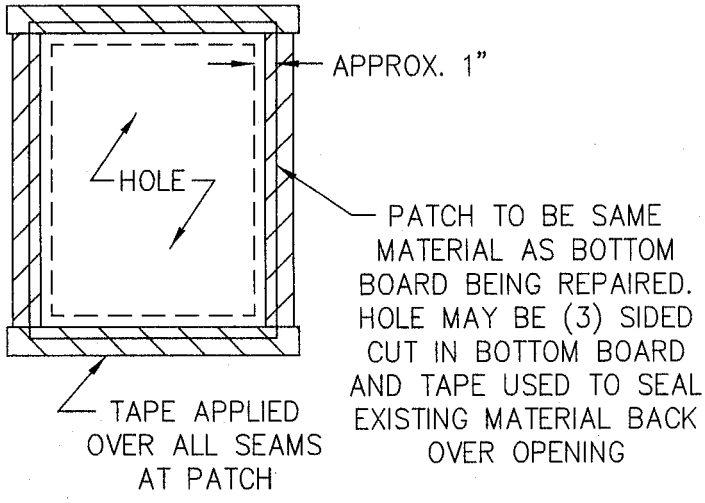

VISUALY INSPECT BOTTOM BOARD OF THE ENTIRE HOUSE TO ASSURE THAT THERE IS NO DAMAGE (RIPS OR TEARS) AND THE AREA AROUND PROTRUSIONS ARE REPAIRED.

P-TRAPS MUST BE CHECKED TO BE SURE THEY ARE WELL INSULATED AND COVERED.

NOTES:

1. P-TRAP ACCESS PANELS WILL BE BELOW P-TRAP AREA IN FLOOR.
2. P-TRAP ACCESS PANELS MAY BE 3 OR 4 SIDED, AND WILL HAVE 1 OR 2 ROWS OF TAPE AT THE PERIMETER OF THE PANEL.
3. NORMAL BOTTOM BOARD REPAIRS WILL HAVE ONLY TAPE OVER THE CUT OR DAMAGED AREA.
4. MINOR HOLES AROUND PIPES ETC. MAY BE SEALED WITH TAPE
5. THESE ARE SOME ACCEPTABLE TAPES TO USE FOR REPAIR; SHURTAPE PC658, FIRST LINE 620

JACOBSEN HOMES

P.O. BOX 368
SAFETY HARBOR, FLORIDA 34695
PHONE (727) 726-1138

NOTICE:
THESE SPECIFICATIONS AND DRAWINGS ARE ORIGINAL, PROPRIETARY, AND CONFIDENTIAL MATERIALS OF JACOBSEN MANUFACTURING INC. SUCH MATERIALS ARE PROVIDED TO THE RECIPIENT FOR SPECIFIC PURPOSES AND MUST BE KEPT CONFIDENTIAL AND SECRET FROM OTHERS.

DRAWN BY: D.M.T.	DATE: 10-31-01	REV. LETTER: B (10-08-08)
DRAWING TITLE: BOTTOM BOARD P-TRAP ACCESS		
DRAWING NUMBER: SU-15-0010		

AIR HANDLER CROSS-OVER CONNECTIONS

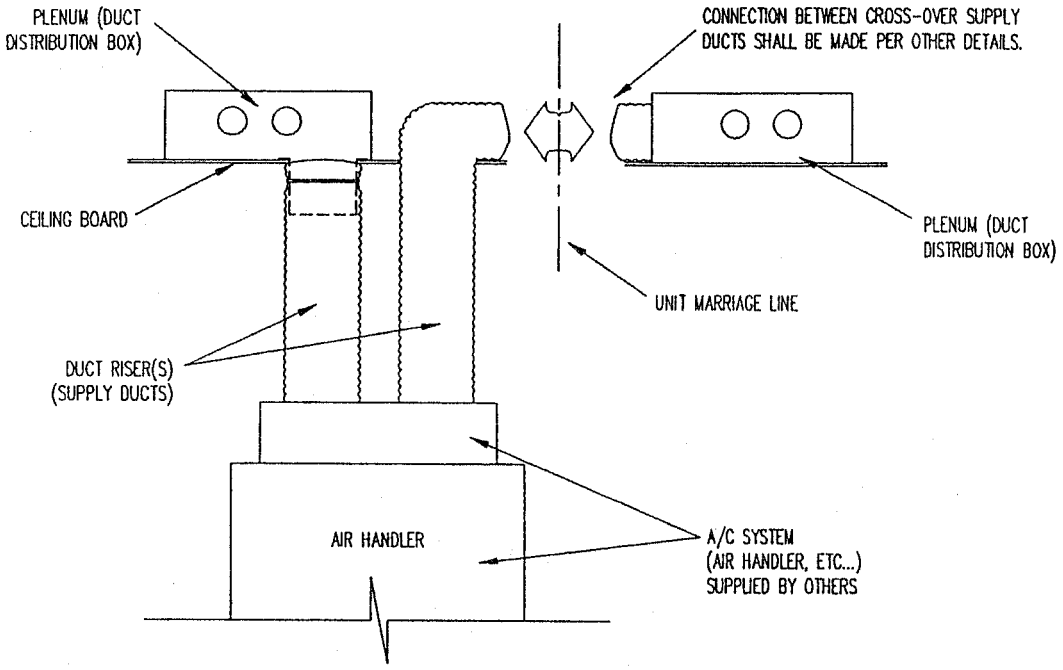

AIR HANDLER CROSS-OVER
ELEVATION VIEW

JACOBSEN HOMES
P.O. BOX 368
SAFETY HARBOR, FLORIDA 34695
PHONE (813) 726-1138

NOTICE:
THESE SPECIFICATIONS AND DRAWINGS ARE ORIGINAL, PROPRIETARY, AND CONFIDENTIAL MATERIALS OF JACOBSEN MANUFACTURING INC. SUCH MATERIALS ARE PROVIDED TO THE RECIPIENT FOR SPECIFIC PURPOSES AND MUST BE KEPT CONFIDENTIAL AND SECRET FROM OTHERS.

DRAWN BY: C.L.Y.	DATE: 3-21-95	REV. LETTER:
DRAWING TITLE: AIR HANDLER CROSS-OVER		
DRAWING NUMBER: SU-AC-0100		

JACOBSEN
Homes

SET-UP MANUAL ADDENDUM

JACOBSEN
HOMES

600 PACKARD COURT
SAFETY HARBOR, FLORIDA
(727) 726-1138

NOTICE

These specifications and drawings are original, proprietary, and confidential materials of Jacobsen Manufacturing, Inc. Such materials are provided to the recipient for specific purposes and must be kept confidential and secret from others.

2/18/08

ALL HOMES SET IN FLORIDA
MUST COMPLY WITH
DMV RULE 15C
EFFECTIVE MARCH 29,1999

For information on 15C
contact the Department of Motor Vehicles
850-413-7600

ADDENDUM

EXTERIOR HEATING/COOLING DUCT

DUE TO THE NEW THERMAL REQUIREMENTS INSTITUTED BY HUD, THE INSULATION VALUES OF THE MANUFACTURED HOME HAVE INCREASED. IT IS NOW NECESSARY FOR ALL EXTERIOR DUCTS INSTALLED ON JACOBSEN HOMES HAVE A MINIMUM R-VALUE OF 8.

ALL HEATING AND/OR COOLING SUPPLY AND RETURN DUCTS EXPOSED DIRECTLY TO THE OUTSIDE AIR, SUCH AS UNDER CHASSIS CROSSOVER DUCTS OR DUCTS CONNECTING EXTERNAL HEATING, COOLING OR COMBINATION HEATING/COOLING APPLIANCES SHALL BE INSULATED WITH MATERIAL HAVING A MINIMUM THERMAL RESITANCE OF R=8.0, WITH A CONTINUOUS VAPOR BARRIER HAVING A PERM RATING OF NOT MORE THAN 1 PERM. WHERE EXPOSED UNDERNEATH THE MANUFACTURED HOME, THE DUCT SHALL NOT BE IN CONTACT WITH THE GROUND.

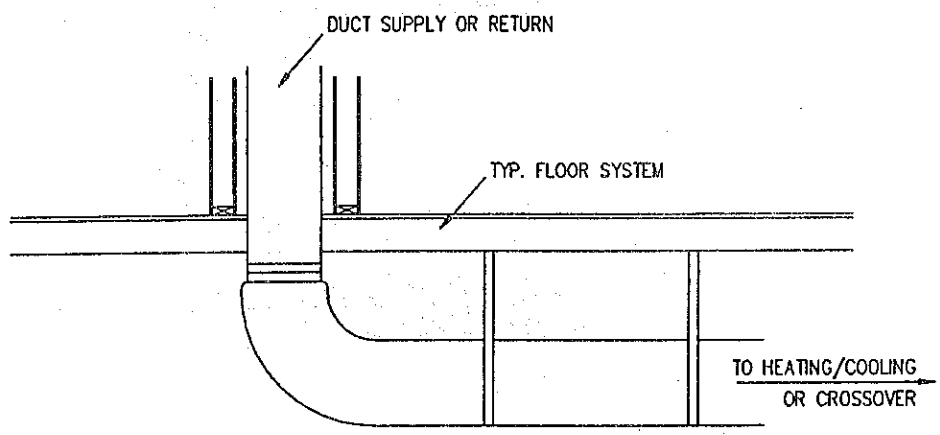

USE MINIMAL AMOUNT OF DUCT. LIMIT DUCT USAGE TO REDUCE THE AMOUT OF BTU/HOUR LOSS.

DO NOT OVER BEND OR CRIMP FLEX DUCT, THIS WILL RESTRICT THE AMOUNT OF AIR FLOW THROUGH THE DUCT.

USE STRAPPING OR OTHER MEANS OF SUPPORT TO PREVENT THE DUCT FROM COMING IN CONTACT WITH THE GROUND. PLACE STRAPS AS NEEDED TO SUPPORT DUCT (DO NOT RESTICT AIR FLOW BY OVER TIGHTENING SUPPORT STRAPS). ALSO SEE MANUFACTURERS INSTALLATION INSTRUCTIONS FOR DUCT INSTALLATION AND SUPPORT.

NOTES:

DAPIA APPROVAL:
APPROVED BY
NTA INC.
JUN 1 5 1995
FEDERAL MANUFACTURED HOME CONSTRUCTION AND SAFETY STANDARDS

JACOBSEN HOMES
P.O. BOX 368
SAFETY HARBOR, FLORIDA 34695
PHONE (813) 726-1138

NOTICE:
THESE SPECIFICATIONS AND DRAWINGS ARE ORIGINAL, PROPRIETARY, AND CONFIDENTIAL MATERIALS OF JACOBSEN MANUFACTURING INC. SUCH MATERIALS ARE PROVIDED TO THE RECIPIENT FOR SPECIFIC PURPOSES AND MUST BE KEPT CONFIDENTIAL AND SECRET FROM OTHERS.

DRAWN BY: C.L.Y.	DATE: 5-30-95	REV. LETTER:
DRAWING TITLE: EXTERIOR A/C DUCT		
DRAWING NUMBER: AD-AC-0001		

ADDENDUM

WHOLE HOUSE VENTILATION SYSTEM

YOUR HOME HAS BEEN EQUIPPED WITH A 'WHOLE HOUSE' VENTILATION SYSTEM. THIS SYSTEM HAS BEEN DESIGNED TO MEET ALL THE REQUIREMENTS SET FORTH BY THE UNITED STATES DEPARTMENT OF HOUSING AND URBAN DEVELOPMENT. THE WHOLE HOUSE VENTILATION SYSTEM IS REQUIRED (BY HUD) TO EXCHANGE AIR DIRECTLY WITH THE EXTERIOR OF THE HOME. THE PURPOSE OF THIS SYSTEM IS TO GIVE THE HOME OWNER THE ABILITY TO INTRODUCE FRESH OUTSIDE AIR INTO THE INTERIOR OF THE MANUFACTURED HOME, INSTEAD OF SIMPLY RE-CIRCULATING THE SAME OLD, STALE AIR THROUGHOUT THE HOME, THUS IMPROVING THE INDOOR AIR QUALITY. THE SYSTEM INSTALLED IN YOUR HOME HAS BEEN DESIGNED TO GIVE YOU COMPLETE CONTROL OF WHEN AND HOW THIS SYSTEM IS USED.

YOUR HOME IS EQUIPPED WITH A FAN THAT WILL EXHAUST STALE INDOOR AIR (TO THE EXTERIOR OF THE HOME). THIS FAN IS SWITCH CONTROLLED AND MAY BE MANUALLY OPERATED. TO DISCONTINUE USE OF THIS SYSTEM, SIMPLY 'TURN OFF' THE SWITCH THAT CONTROLS THE FAN.

NOTICE TO HOMEOWNER

Whole house ventilation switch

You will be able to locate the switch that controls this fan by locating the switch that is labeled-WHOLE HOUSE VENTILATION.
(See AD-AC-0100)

NOTES:

DAPIA APPROVAL:

APPROVED BY NTA INC. SEP 29 1995

FEDERAL MANUFACTURED HOME CONSTRUCTION AND SAFETY STANDARDS

JACOBSEN HOMES
P.O. BOX 368
SAFETY HARBOR, FLORIDA 34695
PHONE (813) 726-1138

NOTICE:
THESE SPECIFICATIONS AND DRAWINGS ARE ORIGINAL, PROPRIETARY, AND CONFIDENTIAL MATERIALS OF JACOBSEN MANUFACTURING INC. SUCH MATERIALS ARE PROVIDED TO THE RECIPIENT FOR SPECIFIC PURPOSES AND MUST BE KEPT CONFIDENTIAL AND SECRET FROM OTHERS.

DRAWN BY: C.L.Y.	DATE: 9-28-95	REV. LETTER: B
DRAWING TITLE: W.H. VENT. SYS.		
DRAWING NUMBER: AD-AC-0100		

ADDENDUM

MULTI-WIDE UNIT FLOOR FASTENING

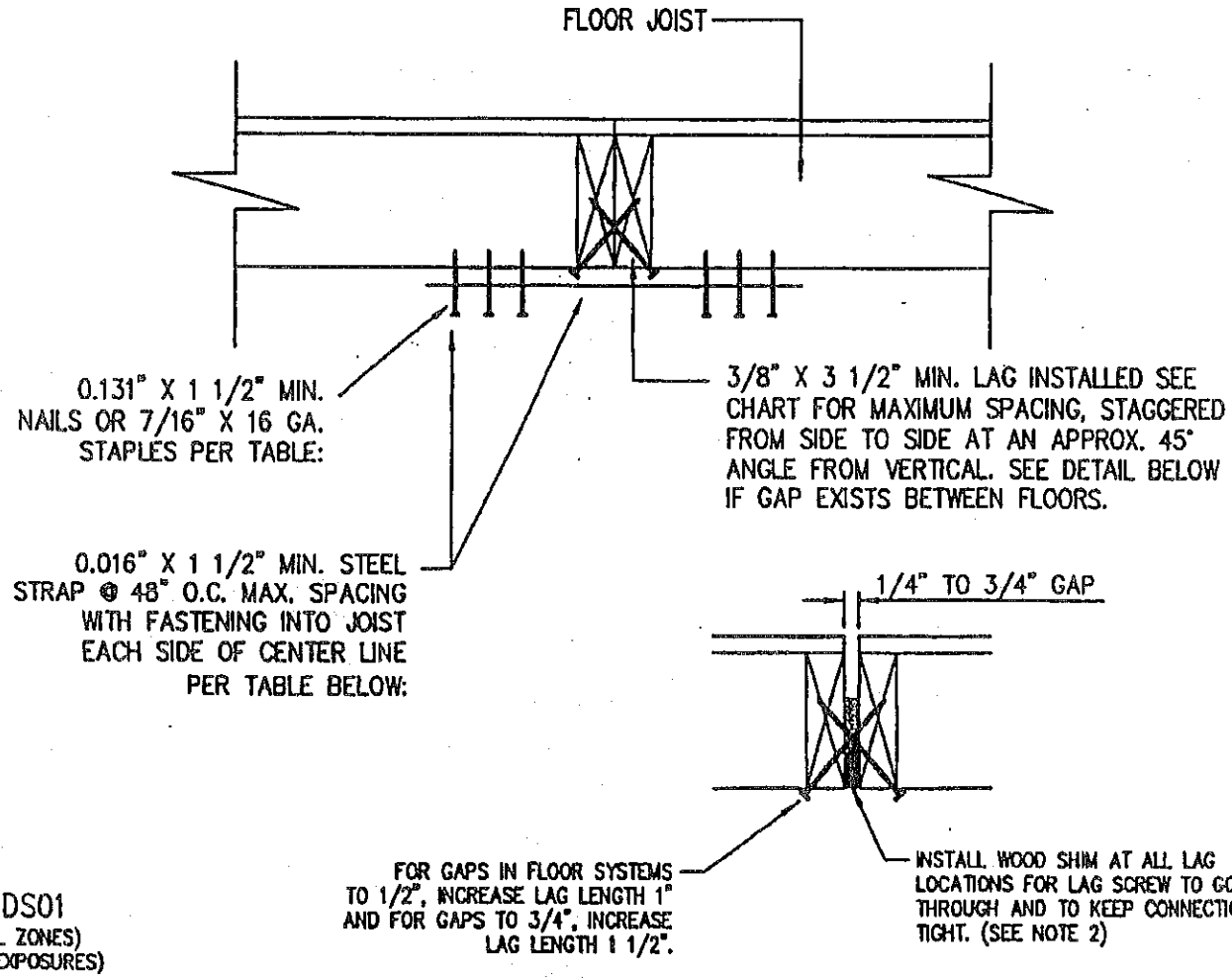

NDS01
(ALL ZONES)
(ALL EXPOSURES)

WIND ZONE	EXPOSURE	3/8" X 3 1/2" LAG SCREW MAXIMUM SPACING	30 GA. STRAP FASTENED W/ 7/16" X 16 GA. STAPLES MAXIMUM SPACING	WIND ZONE	EXPOSURE	MINIMUM NUMBER OF FASTENERS REQUIRED	
						0.131" X 1 1/2" NAILS	7/16" X 16 GA. STAPLES
2	'C'	19" O.C.	2 1/4" O.C.	2	'C'	3	5
	'D'	17" O.C.	1 7/8" O.C.		'D'	4	7
3	'C'	18" O.C.	2" O.C.	3	'C'	4	7
	'D'	16" O.C.	1 1/2" O.C.		'D'	5	8

NOTES:

1. 1" MIN. PENETRATION IS REQUIRED ON STAPLES FOR MIN. 0.016" STRAP.
2. WOOD SHIMS TO BE RIPPED FROM SPF #3 MIN. OR BETTER. (3" X 4" X GAP WIDTH MIN. SIZE) (OSB OR PLYWOOD MAY BE USED IF THICKNESS EQUALS GAP WIDTH-4" X 4" MIN. SIZE)
3. 10½" MAXIMUM SIDEWALL HEIGHT.
4. SEE OTHER DETAILS FOR SEALING FLOORS FOR AIR INFILTRATION.

ENGINEER APPROVAL:
5/23/06
John C. Doeden, P.E.
K2 Engineering, Inc

DAPIA APPROVAL:
APPROVED BY
NTA INC.
Revised May 24,2006
FEDERAL MANUFACTURED HOME CONSTRUCTION AND SAFETY STANDARDS

JACOBSEN HOMES
P.O. BOX 368
SAFETY HARBOR, FLORIDA 34695
PHONE (813) 726-1138

NOTICE:
THESE SPECIFICATIONS AND DRAWINGS ARE ORIGINAL, PROPRIETARY, AND CONFIDENTIAL MATERIALS OF JACOBSEN MANUFACTURING INC. SUCH MATERIALS ARE PROVIDED TO THE RECIPIENT FOR SPECIFIC PURPOSES AND MUST BE KEPT CONFIDENTIAL AND SECRET FROM OTHERS.

DRAWN BY: M.T.	DATE: 05-22-06	REV. LETTER: C	
DRAWING TITLE: M/W FLOOR FASTENING			
DRAWING NUMBER: AD-FA-0001			

ADDENDUM

MULTI-WIDE UNIT WALL FASTENING

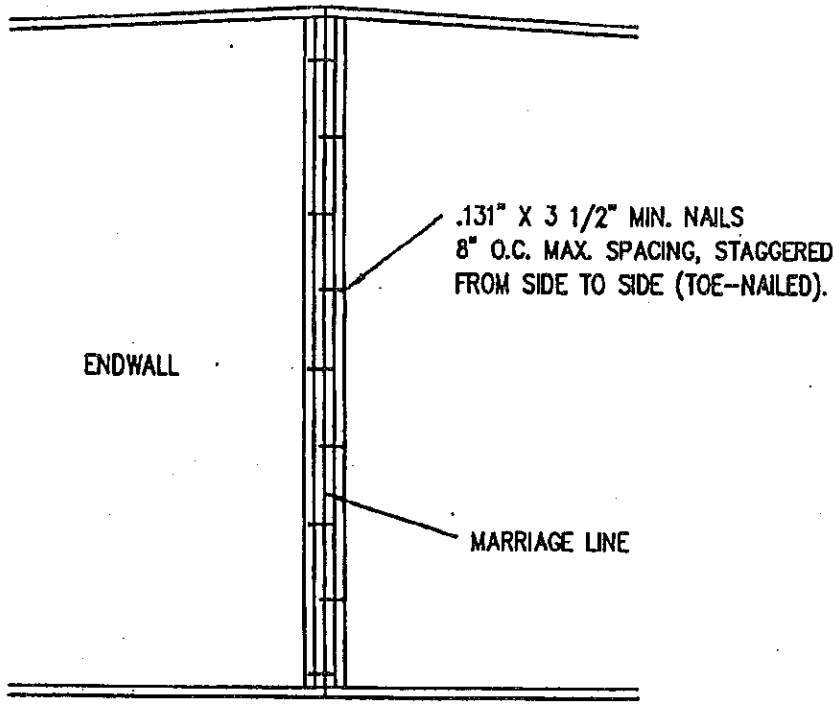

NDS01

NOTES:

1. FASTENING REQUIRED ONLY AT MARRIAGE LINE OF EXTERIOR WALLS.

ENGINEER APPROVAL:

5/23/06

John C. Doeden, P.E.
K2 Engineering, Inc.

DAPIA APPROVAL:

APPROVED BY
NTA INC.
Revised May 24,2006
FEDERAL MANUFACTURED HOME CONSTRUCTION AND SAFETY STANDARDS

JACOBSEN HOMES
P.O. BOX 368
SAFETY HARBOR, FLORIDA 34695
PHONE (813) 726-1138

NOTICE:
THESE SPECIFICATIONS AND DRAWINGS ARE ORIGINAL, PROPRIETARY, AND CONFIDENTIAL MATERIALS OF JACOBSEN MANUFACTURING INC. SUCH MATERIALS ARE PROVIDED TO THE RECIPIENT FOR SPECIFIC PURPOSES AND MUST BE KEPT CONFIDENTIAL AND SECRET FROM OTHERS.

DRAWN BY: M.T.	DATE: 05-22-06	REV. LETTER: B	
DRAWING TITLE: M/W WALL FASTENING			
DRAWING NUMBER: AD-FA-0010			

ADDENDUM

MULTI-WIDE ROOF FASTENING

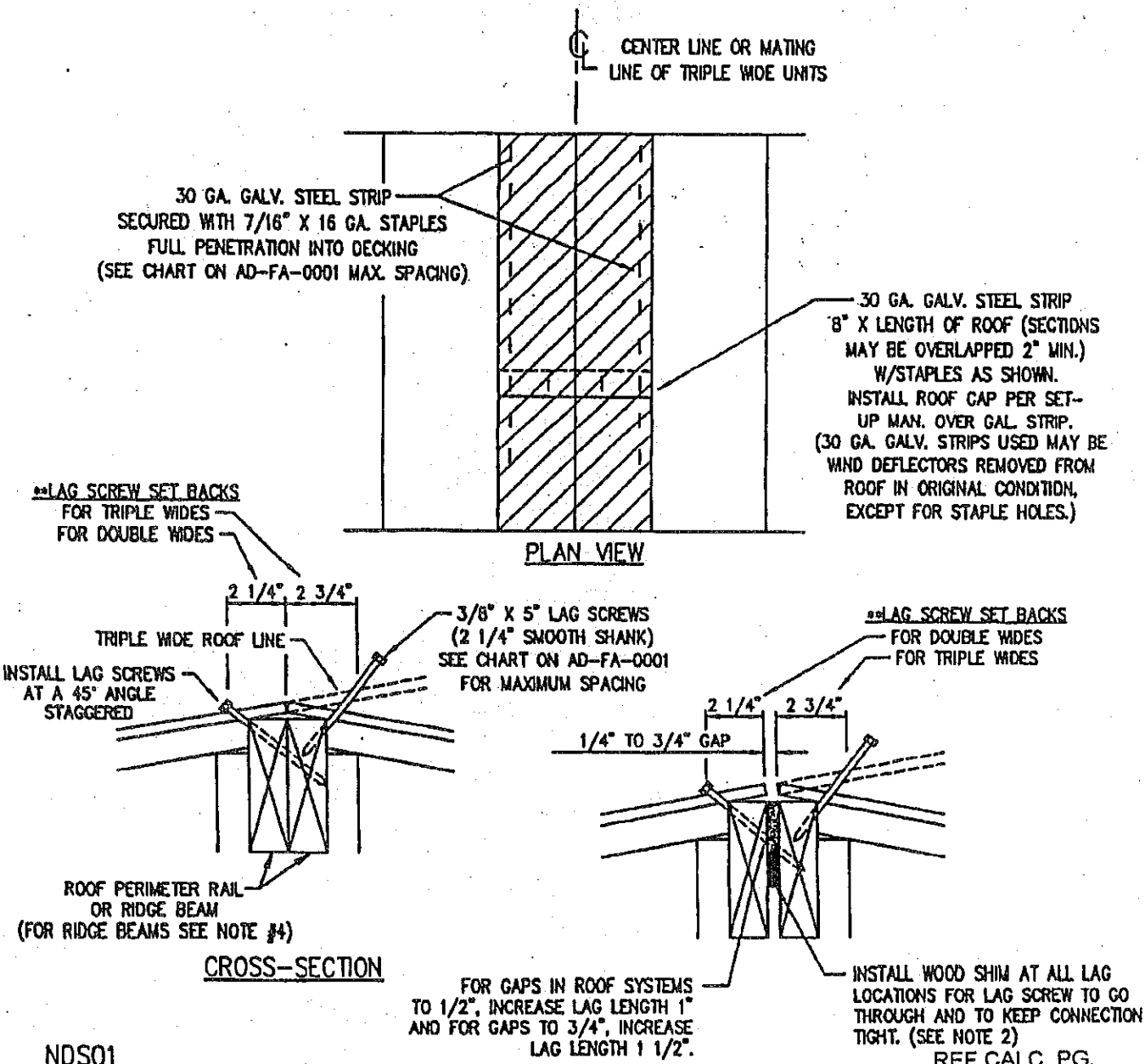

NDS01
(ALL ZONES)
(ALL EXPOSURES)

REF CALC. PG.
C WA- 91.01- 91.07

NOTES:

1. 2 1/8" MIN. PENETRATION INTO RECEIVING MEMBER IS REQUIRED FOR LAG SCREWS.
2. WOOD SHIMS TO BE RIPPED FROM SPF #3 MIN. OR BETTER. (3" X 6" X GAP WIDTH MIN. SIZE) (OSB OR PLYWOOD MAY BE USED IF THICKNESS EQUALS GAP WIDTH-4" X 6" MIN. SIZE)
3. SEE OTHER DETAILS FOR COMPLETING ROOF INTERECTION.
4. WHEN INSTALLING A LAG SCREW INTO A RIDGE BEAM, FIRST-DRILL A 3/8" CLEARANCE HOLE THROUGH THE FIRST RIDGE BEAM, SECOND-DRILL A 1/4" HOLE THROUGH THE RECEIVING RIDGE BEAM FOR THE THREADED PORTION OF LAG SCREW. THESE DIMS. ARE FOR 3/8" LAG SCREWS ONLY.
5. 108" MAXIMUM SIDEWALL HEIGHT.

ENGINEER APPROVAL:
5/23/06
John C. Doeden, P.E.
K2 Engineering, Inc

DAPIA APPROVAL:
APPROVED BY
NTA INC.
Revised May 24,2006
FEDERAL MANUFACTURED HOME CONSTRUCTION AND SAFETY STANDARDS

JACOBSEN HOMES
P.O. BOX 368
SAFETY HARBOR, FLORIDA 34695
PHONE (813) 726-1138

NOTICE:
THESE SPECIFICATIONS AND DRAWINGS ARE ORIGINAL, PROPRIETARY, AND CONFIDENTIAL MATERIALS OF JACOBSEN MANUFACTURING INC. SUCH MATERIALS ARE PROVIDED TO THE RECIPIENT FOR SPECIFIC PURPOSES AND MUST BE KEPT CONFIDENTIAL AND SECRET FROM OTHERS.

DRAWN BY: M.T.	DATE: 05-22-06	REV. LETTER: C
DRAWING TITLE: M/W ROOF FASTENING		
DRAWING NUMBER: AD-FA-0020		

ADDENDUM

MULTI-WIDE ROOF SEALING/CLOSE-UP

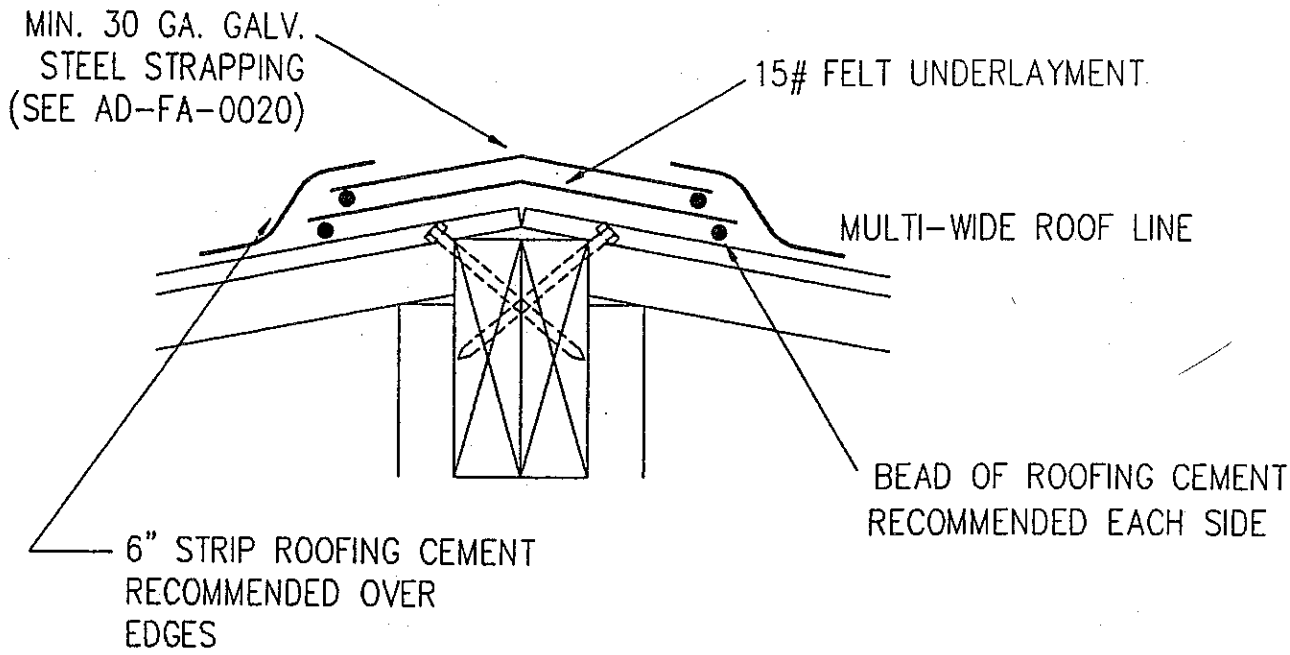

NOTES:

1. 30 GA. GALV. STRIPS USED MAY BE WIND DEFLECTORS REMOVED FROM ROOF IN ORIGINAL CONDITION (EXCEPT FOR STAPLE HOLES).

DAPIA APPROVAL:

APPROVED BY NTA INC. JUN 1 5 1995
FOR MANUFACTURED HOME CONSTRUCTION AND SAFETY STANDARDS

JACOBSEN HOMES
P.O. BOX 368
SAFETY HARBOR, FLORIDA 34695
PHONE (813) 726-1138

NOTICE:
THESE SPECIFICATIONS AND DRAWINGS ARE ORIGINAL, PROPRIETARY, AND CONFIDENTIAL MATERIALS OF JACOBSEN MANUFACTURING INC. SUCH MATERIALS ARE PROVIDED TO THE RECIPIENT FOR SPECIFIC PURPOSES AND MUST BE KEPT CONFIDENTIAL AND SECRET FROM OTHERS.

DRAWN BY: C.L.Y.	DATE: 6-5-95	REV. LETTER:
DRAWING TITLE: M/W ROOF SEALING		
DRAWING NUMBER: AD-FA-0025		

ADDENDUM

MULTI-WIDE ROOF SEALING/CLOSE-UP

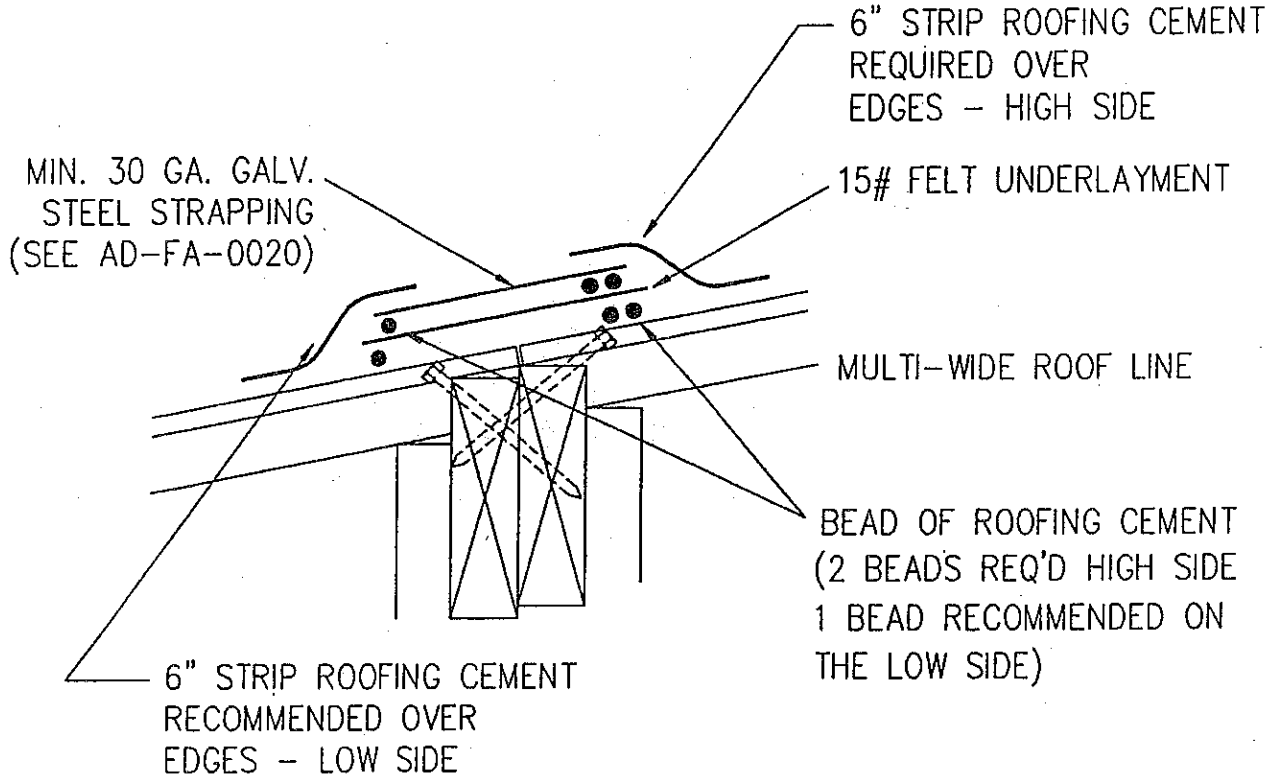

NOTES:

1. 30 GA. GALV. STRIPS USED MAY BE WIND DEFLECTORS REMOVED FROM ROOF IN ORIGINAL CONDITION (EXCEPT FOR STAPLE HOLES).

DAPIA APPROVAL:

APPROVED BY NTA INC. JUN 1 5 1995
FEDERAL MANUFACTURED HOME CONSTRUCTION AND SAFETY STANDARDS

JACOBSEN HOMES
P.O. BOX 368
SAFETY HARBOR, FLORIDA 34695
PHONE (813) 726-1138

NOTICE:
THESE SPECIFICATIONS AND DRAWINGS ARE ORIGINAL, PROPRIETARY, AND CONFIDENTIAL MATERIALS OF JACOBSEN MANUFACTURING INC. SUCH MATERIALS ARE PROVIDED TO THE RECIPIENT FOR SPECIFIC PURPOSES AND MUST BE KEPT CONFIDENTIAL AND SECRET FROM OTHERS.

DRAWN BY: C.L.Y.	DATE: 6-5-95	REV. LETTER:
DRAWING TITLE: M/W ROOF SEALING		
DRAWING NUMBER: AD-FA-0026		

SHIPPED LOOSE HEARTH EXTENSIONS

TYPICAL WALL

HEARTH INSTALLATION:

1. REMOVE ANY CARPET AND/OR PAD FROM UNDER THE HEARTH EXTENSION AREA.
2. INSPECT THE METAL FLASHING IN THE HEARTH AREA TO INSURE THAT IT HAS BEEN INSTALLED (THIS FLASHING MUST BE PLACED ON THE FLOOR TO PROTECT THE AREA BETWEEN THE FIREPLACE AND THE HEARTH).
3. LOCATE THE HEARTH EXTENSION (SHIPPED LOOSE IN THE HOME) AND INSTALL FOLLOWING THESE STEPS:
   A. CAREFULLY PLACE THE HEARTH EXTENSION IN THE PROPER LOCATION IN FRONT OF THE FIREPLACE ASSEMBLY.
   B. SECURE THE HEARTH EXTENSION TO THE FLOOR W/ 4 #8 x 2" WOOD SCREWS.
   C. FILL THE AREA BETWEEN THE FACE OF THE FIREPLACE AND THE HEARTH EXTENSION WITH A NON-COMBUSTABLE CAULKING OR MORTAR.
   D. OR FOLLOW THE HEARTH MANUFACTURERS INSTRUCTIONS FOR INSTALLATION.

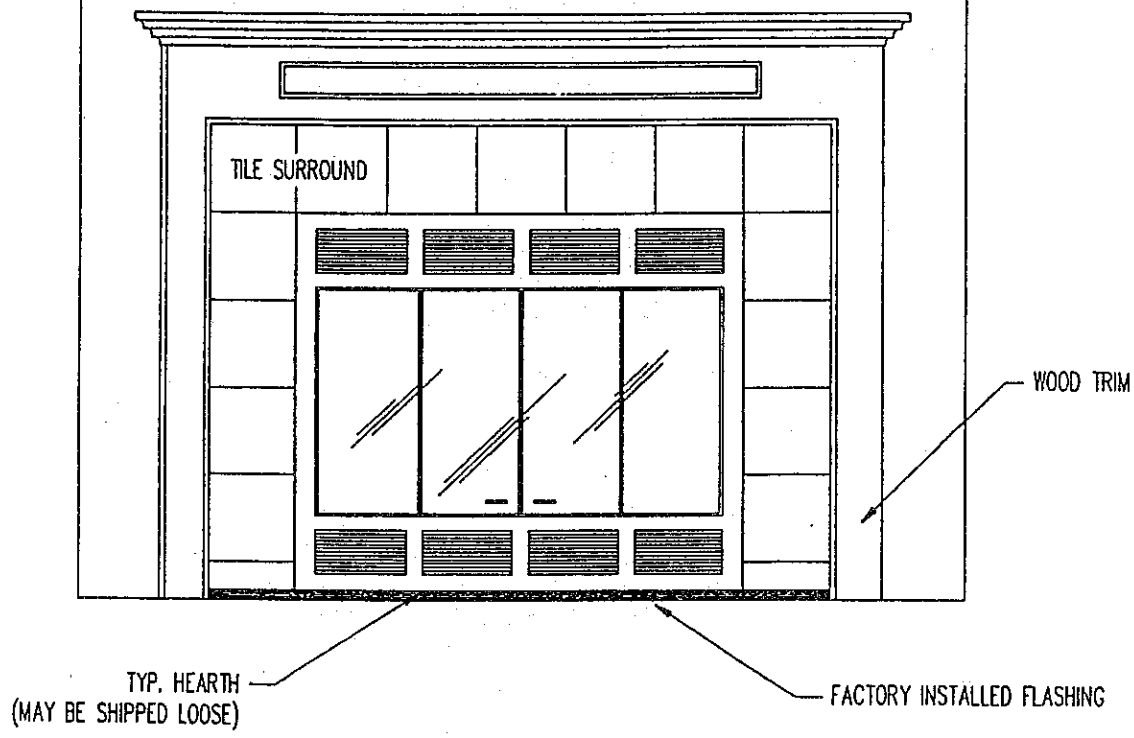

NOTES:

1. A TYPICAL TILE FRONT FIREPLACE IS SHOWN, HOWEVER THIS DETAIL APPLIES TO ALL FACTORY INSTALLED FIREPLACES. (STONE, WOOD, GYPSUM, TILE, STUCCO, ETC... MAY BE USED IN LIEU OF THE TYPE OF FIREPLACE SURROUND SHOWN ABOVE.)

DAPIA APPROVAL:

APPROVED BY NTA INC. JUN 28 1995

FEDERAL MANUFACTURED HOME CONSTRUCTION AND SAFETY STANDARDS

JACOBSEN HOMES

P.O. BOX 368
SAFETY HARBOR, FLORIDA 34695
PHONE (813) 726-1138

NOTICE:
THESE SPECIFICATIONS AND DRAWINGS ARE ORIGINAL, PROPRIETARY, AND CONFIDENTIAL MATERIALS OF JACOBSEN MANUFACTURING INC. SUCH MATERIALS ARE PROVIDED TO THE RECIPIENT FOR SPECIFIC PURPOSES AND MUST BE KEPT CONFIDENTIAL AND SECRET FROM OTHERS.

DRAWN BY: C.L.Y.	DATE: 6-16-95	REV. LETTER:
DRAWING TITLE: SHIP-LOOSE HEARTH		
DRAWING NUMBER: AD-FP-0001		

SMOKE ALARM ADDENDUM

Enclosed in the home owner's packet is the smoke alarm user's manual, (if it is not there, contact Jacobsen Homes and one will be sent to you.

NOTICE TO DEALER AND SET-UP PERSONNEL

This home is equipped with a smoke alarm system and must be tested in accordance with the smoke alarm user's manual after the home is completely set-up and all the electrical connections are done.

NOTICE TO CUSTOMER

Smoke Alarms have been installed in your Jacobsen Homes. You should be familiar with the locations and operation, and learn how the alarms can be silenced once they have sounded and be familiar with its use. This is a very important safety device installed for your protection. Be sure that it is kept in A-1 working condition by testing if frequently in accordance with the manufacturer's instructions.

The alarms operate on household current, and have battery backups. Its purpose is to provide early warning in case of a fire. Again we stress the importance of keeping your smoke alarms in proper working order.

TESTING SMOKE ALARM

Test smoke alarms after home has been set-up completely. To test the smoke alarm, press and hold the test button on the cover of the unit, until the alarm sounds. All smoke alarms should sound alarms. If all units do not alarm, replace units immediately. This test should be given to all smoke alarms individually.

APPROVED BY REV.
NTA INC.
MAR 25 2009
FEDERAL MANUFACTURED HOME
CONSTRUCTION AND SAFETY STANDARDS

SET-UP MANUAL ADDENDUM
AD-FS-0001-A

TRUSS SHEATHING

APPROVED BY
NTA INC.
FEDERAL MANUFACTURED HOME CONSTRUCTION AND SAFETY STANDARDS

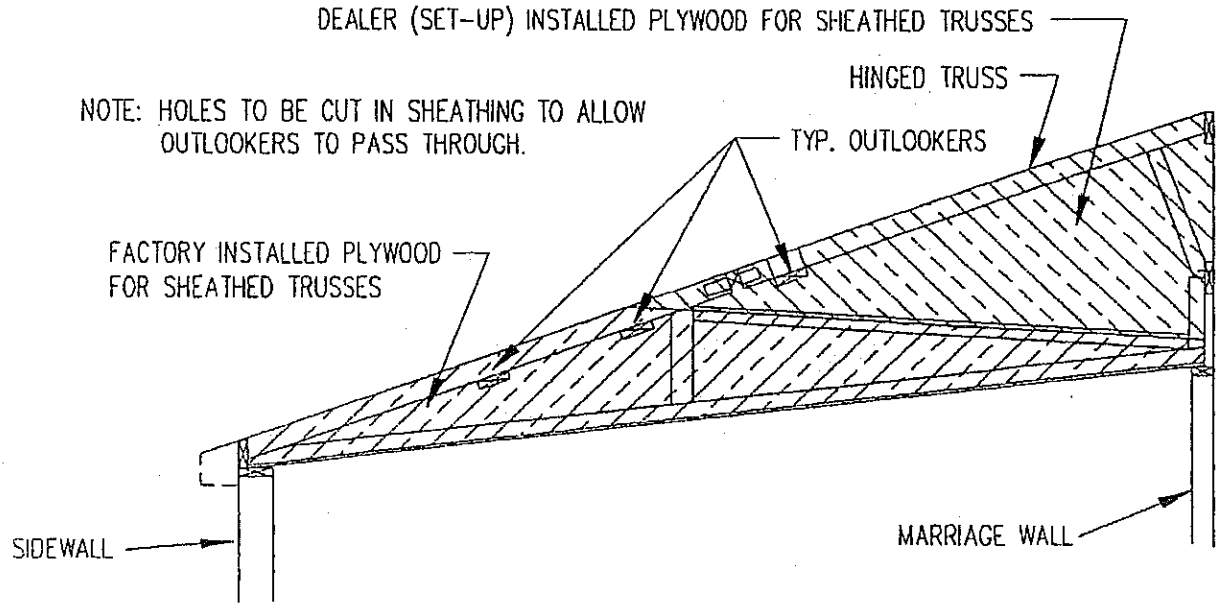

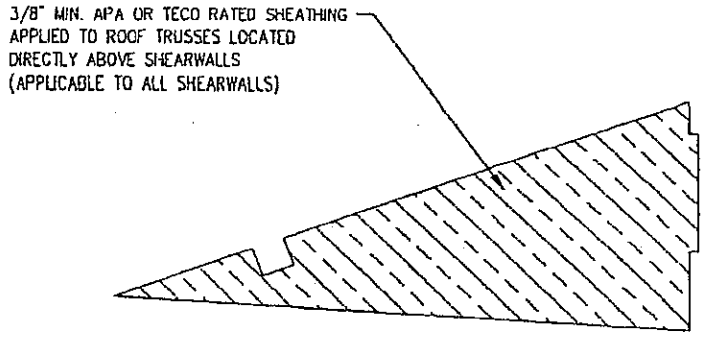

PENETRATIONS OF THE SHEATHING ON THE TRUSS(ES) FOR THE OVERHANG OUTLOOKERS (PURLINS), ATTIC VENTALATION.

OPENINGS IN TRUSS SHEATHING MAY BE LOCATED AT ANY LOCATION ALONG THE LENGTH OF THE TRUSS.

(18" X 14 1/2" MAXIMUM SINGLE OPENING SIZE IN TRUSS SHEATHING)

3/8" SHEATHING TO BE INSTALLED ON-SITE.

WINDZONE III
(110 MPH)
ALL EXPOSURES

NOTES:

1. 3/8" MIN. RATED SHEATHING FASTENED TO ROOF TRUSS WITH 7/16" X 1 1/2" X 16 GA. MIN. STAPLES 1 1/4" O.C. AT PANEL EDGES AND 3" O.C. AT ALL FRAMING MEMBERS. (NO GLUE REQUIRED)

ENGINEER APPROVAL:

Gary Stilwell, P.E.
K2 Engineering, Inc.
4/29/98

DAPIA APPROVAL:

APPROVED BY
NTA INC.
MAY 1 1998
FEDERAL MANUFACTURED HOME CONSTRUCTION AND SAFETY STANDARDS

JACOBSEN HOMES
P.O. BOX 368
SAFETY HARBOR, FLORIDA 34695
PHONE (813) 726-1138

NOTICE:
THESE SPECIFICATIONS AND DRAWINGS ARE ORIGINAL, PROPRIETARY, AND CONFIDENTIAL MATERIALS OF JACOBSEN MANUFACTURING INC. SUCH MATERIALS ARE PROVIDED TO THE RECIPIENT FOR SPECIFIC PURPOSES AND MUST BE KEPT CONFIDENTIAL AND SECRET FROM OTHERS.

DRAWN BY: R.R.	DATE: 4-27-98	REV. LETTER: —
DRAWING TITLE: TRUSS SHEATHING		
DRAWING NUMBER: AD-HR-0001		

HINGED ROOF DETAIL

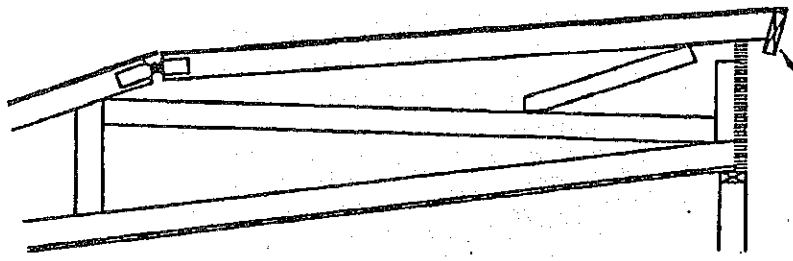

DISTANCE OF TRAVEL TO RAISE ROOF FROM SHIPPING POSITION TO SET-UP POSITION IS APPROX. 22 1/2".

LIFT HINGED ROOF SECTION SYSTEMATICLY WITH MECHANICAL DEVICES NO MORE THAN 12 FEET APART. LOCATE LIFTING POINTS WITHIN 36" OF END OF ROOF SECTION, AND AVOID LIFTING WITHIN 2 FEET OF A SPLICE IN THE RIM RAIL.

HINGED ROOF IN SHIPPING POSITION

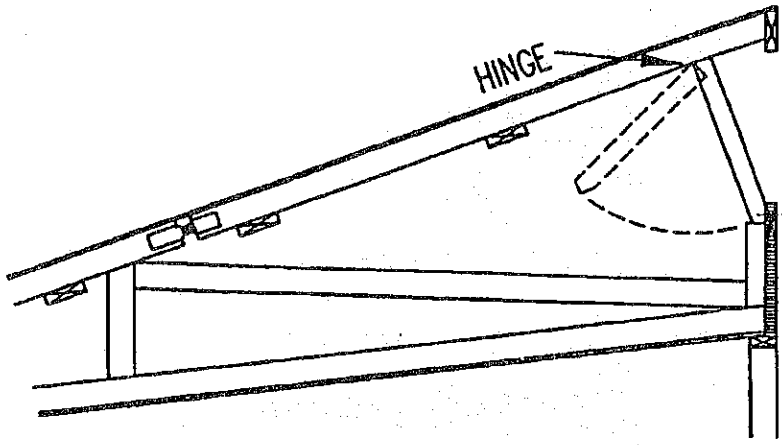

SECURE HINGED KING POST TO RIDGE BEAM, OR 2 X 6 SPF #3 FIXED KING POST TOP RAIL, WITH 3- #10 X 3" WOOD SCREW OR 3- #8 X 3" WOOD SCREWS.

HINGED ROOF IN SET-UP POSITION

NDS01

REF. CALC. PG. C-RF- 223.0 - 223.6

NOTES:

1. BRACE RAISED ROOF SECTION IN THE RAISED POSITION BEFORE SWINGING HINGED KING POSTS INTO POSITION.

ENGINEER APPROVAL:

6/6/06

John C. Doedan, P.E.
K2 Engineering, Inc

DAPIA APPROVAL:

APPROVED BY
NTA INC.
Revised Jun 06,2006
FEDERAL MANUFACTURED HOME CONSTRUCTION AND SAFETY STANDARDS

JACOBSEN HOMES
P.O. BOX 368
SAFETY HARBOR, FLORIDA 34695
PHONE (813) 726-1138

NOTICE:
THESE SPECIFICATIONS AND DRAWINGS ARE ORIGINAL, PROPRIETARY, AND CONFIDENTIAL MATERIALS OF JACOBSEN MANUFACTURING INC. SUCH MATERIALS ARE PROVIDED TO THE RECIPIENT FOR SPECIFIC PURPOSES AND MUST BE KEPT CONFIDENTIAL AND SECRET FROM OTHERS.

DRAWN BY:	DATE:	REV. LETTER:
O.A.	06-02-06	A
DRAWING TITLE: HINGED ROOF DETAIL		
DRAWING NUMBER: AD-HR-0002		

HINGED ROOF DETAIL

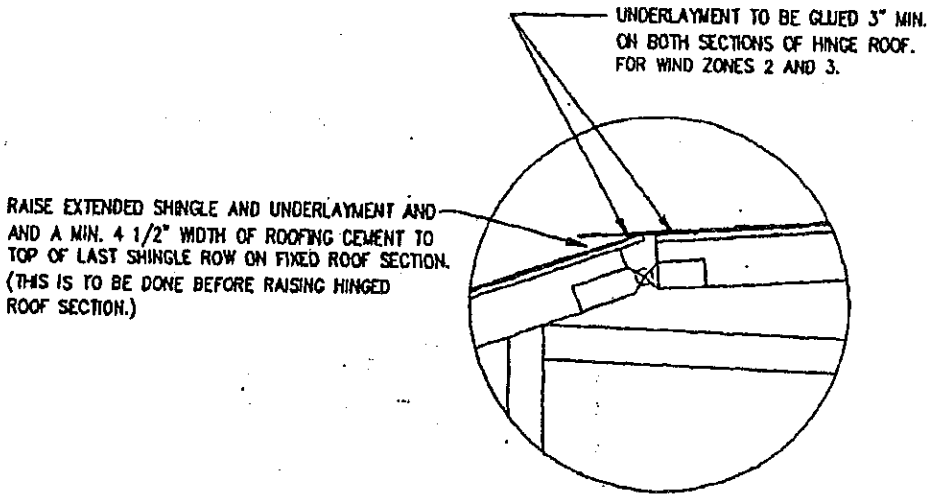

SHINGLE AND UNDERLAYMENT CEMENTING AT HINGED AREA

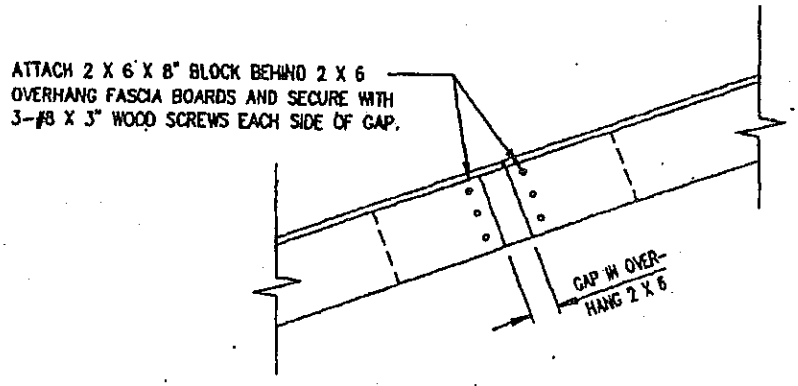

APPROVED BY
NTA INC.
Revised Nov 30,2006
FEDERAL MANUFACTURED HOME CONSTRUCTION AND SAFETY STANDARDS

BLOCK ATTACHMENT AT FRONT AND REAR OVERHANGS

WINDZONE III
(110 MPH)
ALL EXPOSURES

NOTES:

1. BRACE RAISED ROOF SECTION IN THE RAISED POSITION BEFORE SWINGING HINGED KING POSTS INTO POSITION.

ENGINEER APPROVAL:
11/28/06
John C. Doeden, P.E.
K2 Engineering, Inc.

DAPIA APPROVAL:

JACOBSEN HOMES
P.O. BOX 368
SAFETY HARBOR, FLORIDA 34695
PHONE (813) 726-1138

NOTICE:
THESE SPECIFICATIONS AND DRAWINGS ARE ORIGINAL, PROPRIETARY, AND CONFIDENTIAL MATERIALS OF JACOBSEN MANUFACTURING INC. SUCH MATERIALS ARE PROVIDED TO THE RECIPIENT FOR SPECIFIC PURPOSES AND MUST BE KEPT CONFIDENTIAL AND SECRET FROM OTHERS.

DRAWN BY: D.T.	DATE: 10-02-06	REV. LETTER:
DRAWING TITLE: HINGED ROOF DETAIL		A
DRAWING NUMBER: AD-HR-0003		

SHINGLE AND UNDERLAYMENT APPLICATION ON HINGED SECTION

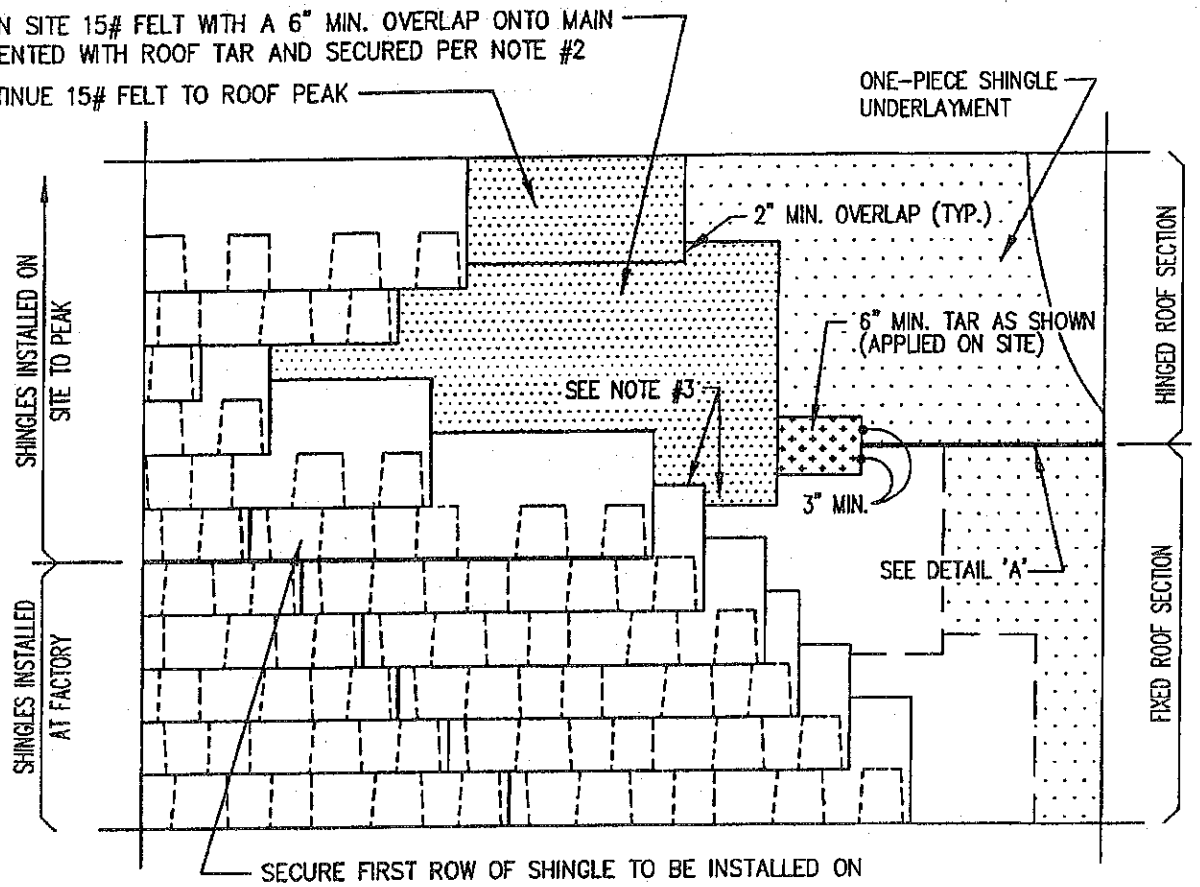

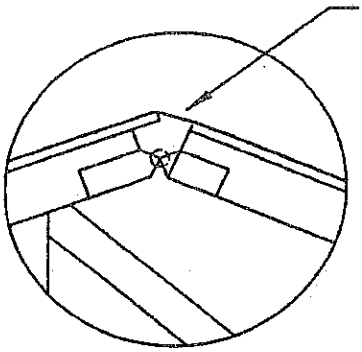

REMOVE THE ONE PIECE SHINGLE UNDERLAYMENT IN THE GAP (HINGE SECTION IN DOWN POSITION) BEFORE LIFTING THE HINGED SECTION OF THE ROOF TO ITS FINAL POSITION AND BEFORE INSTALLING THE 15# FELT AND SHINGLES.

DETAIL 'A'

WINDZONE III
(110 MPH)
ALL EXPOSURES

NOTES:

1. CEMENTING OF 15# FELT IS NOT REQUIRED IN ANY AREA EXCEPT WHERE NOTED.
2. FASTENING OF 15# FELT IS NOT REQUIRED. (FASTENERS APPLIED JUST TO HOLD FELT IN PLACE UNTIL SHINGLES ARE INSTALLED.)
3. EXTEND THE FIRST LAYER OF ON SITE 15# FELT ONTO THE FIXED ROOF A MIN. OF 6" AND UNDER THE LAST COURSE OF FACTORY INSTALLED SHINGLES IF NEEDED TO MAINTAIN THE 6" MIN. OVERLAP ONTO THE FIXED ROOF.
4. INCLUDED IN THE HINGED ROOF ADDENDUM ARE DETAILS: AD-HR-0001 (WITH SPECIFIC END PANEL LAYOUT), AD-HR-0002, AD-HR-0003, AND AD-HR-0004.

DAPIA APPROVAL:

APPROVED BY
NIA INC.
SEP 22 2003
FEDERAL MANUFACTURED HOME CONSTRUCTION AND SAFETY STANDARDS

JACOBSEN HOMES
P.O. BOX 368
SAFETY HARBOR, FLORIDA 34695
PHONE (813) 726-1138

NOTICE:
THESE SPECIFICATIONS AND DRAWINGS ARE ORIGINAL, PROPRIETARY, AND CONFIDENTIAL MATERIALS OF JACOBSEN MANUFACTURING INC. SUCH MATERIALS ARE PROVIDED TO THE RECIPIENT FOR SPECIFIC PURPOSES AND MUST BE KEPT CONFIDENTIAL AND SECRET FROM OTHERS.

DRAWN BY: M.T.	DATE: 9-20-03	REV. LETTER: —
DRAWING TITLE: SHINGLE AND UNDERLAYMENT APPLICATION ON HINGED SECTION		
DRAWING NUMBER: AD-HR-0005		

PEAK INSTALLATION DETAILS

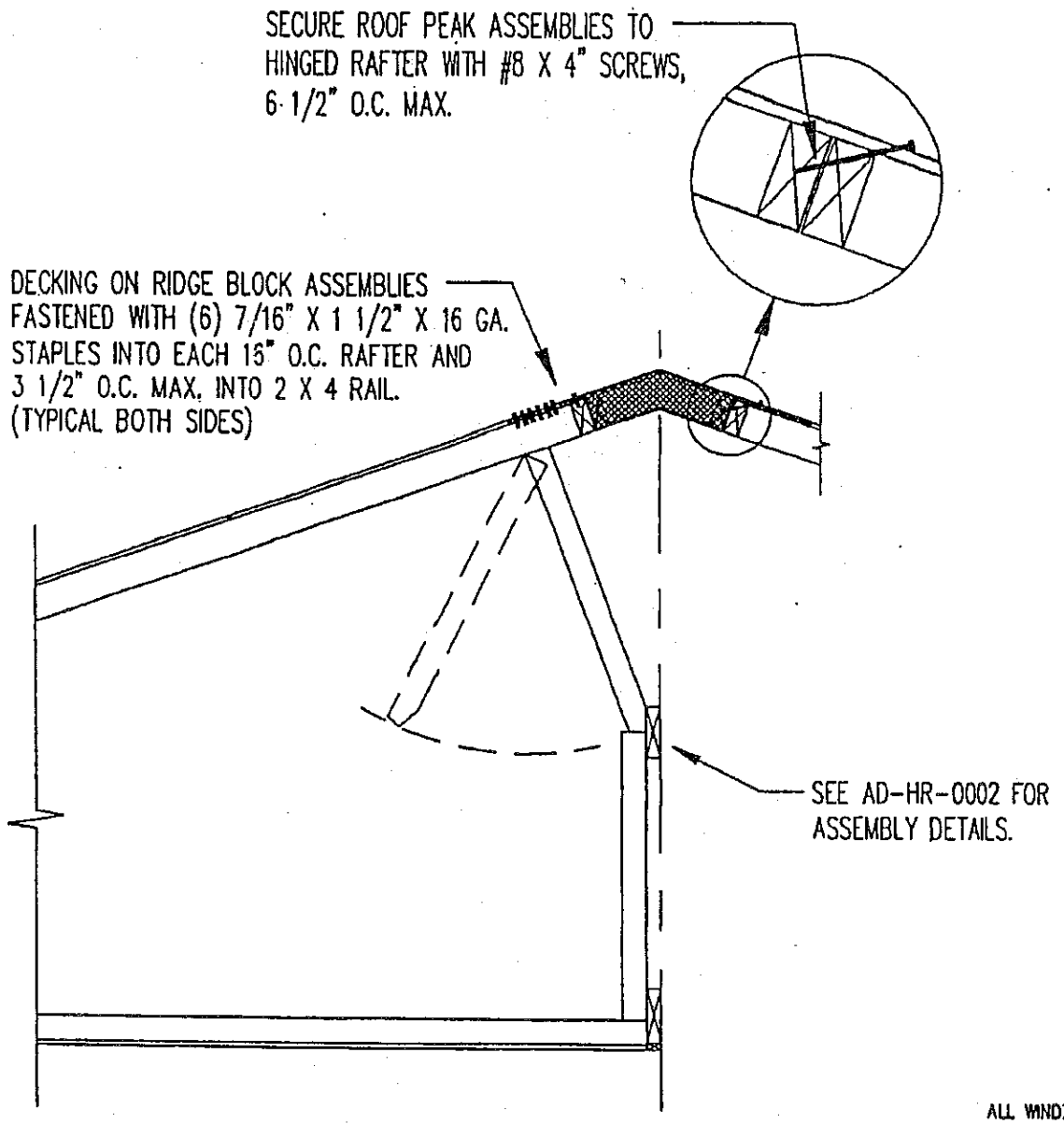

ALL WINDZONES
ALL EXPOSURES
20 PSF ROOF
10 PSF D.L.

NDS01

REF. CALCS. CRC - 167.01 - 167.02

NOTES:

1. SEE AD-HR-0007 FOR INSTALLATION OF UNDERLAYMENT AND SHINGLES.

ENGINEER APPROVAL:

6/6/06
John C. Doeden, P.E.
K2 Engineering, Inc

DAPIA APPROVAL: –

APPROVED BY
NTA INC.
Revised Jun 09,2006
FEDERAL MANUFACTURED HOME CONSTRUCTION AND SAFETY STANDARDS

JACOBSEN HOMES
P.O. BOX 368
SAFETY HARBOR, FLORIDA 34695
PHONE (727) 726-1138

NOTICE:
THESE SPECIFICATIONS AND DRAWINGS ARE ORIGINAL, PROPRIETARY, AND CONFIDENTIAL MATERIALS OF JACOBSEN MANUFACTURING INC. SUCH MATERIALS ARE PROVIDED TO THE RECIPIENT FOR SPECIFIC PURPOSES AND MUST BE KEPT CONFIDENTIAL AND SECRET FROM OTHERS.

DRAWN BY:	DATE:	REV. LETTER:
O.A.	06-06-06	A

DRAWING TITLE: PEAK INSTALLATION DETAILS

DRAWING NUMBER: AD-HR-0006

SHINGLE/UNDERLAYMENT INSTALLATION

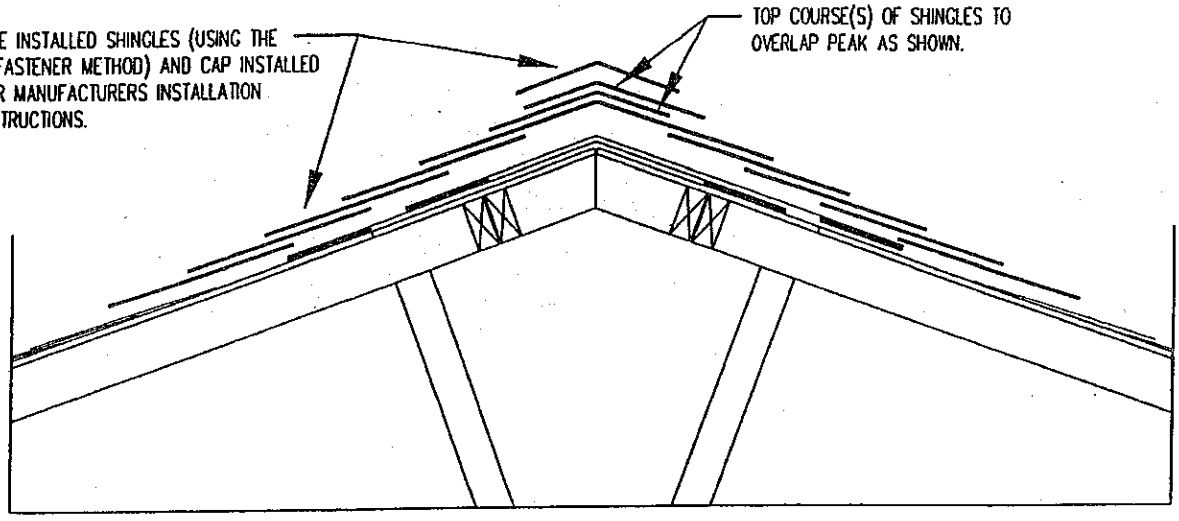

SHINGLE INSTALLATION

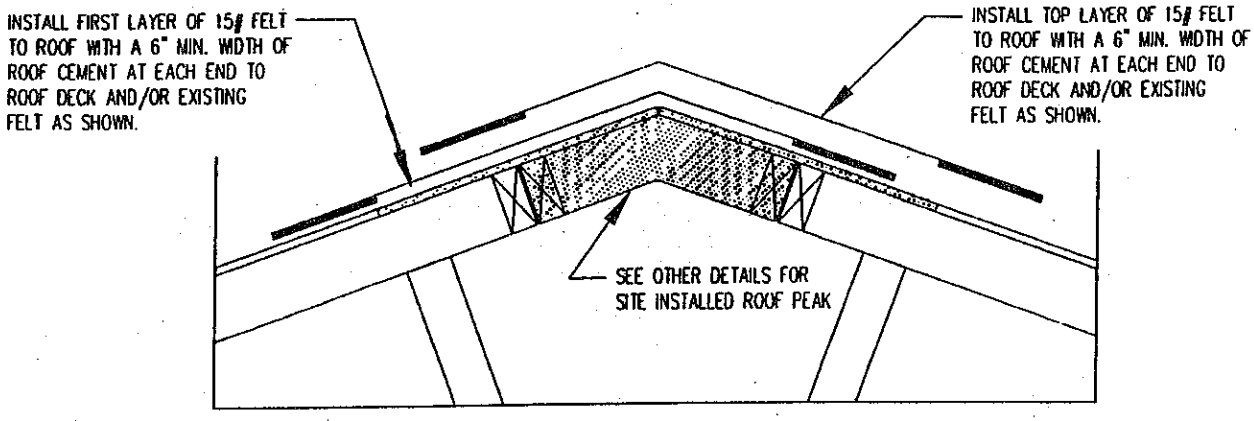

UNDERLAYMENT INSTALLATION

NOTES:

DAPIA APPROVAL:

APPROVED BY

NTA INC.

AUG 0 2 2004

FEDERAL MANUFACTURED HOME CONSTRUCTION AND SAFETY STANDARDS

JACOBSEN HOMES

P.O. BOX 368
SAFETY HARBOR, FLORIDA 34695
PHONE (727) 726-1138

NOTICE:
THESE SPECIFICATIONS AND DRAWINGS ARE ORIGINAL, PROPRIETARY, AND CONFIDENTIAL MATERIALS OF JACOBSEN MANUFACTURING INC. SUCH MATERIALS ARE PROVIDED TO THE RECIPIENT FOR SPECIFIC PURPOSES AND MUST BE KEPT CONFIDENTIAL AND SECRET FROM OTHERS.

DRAWN BY:	DATE:	REV. LETTER:
M.T.	7-28-04	—

DRAWING TITLE: SHINGLE/UNDERLAYMENT INSTALLATION

DRAWING NUMBER: AD-HR-0007

ADDENDUM

TYP. SHIP-LOOSE PLUMBING SUPPORT

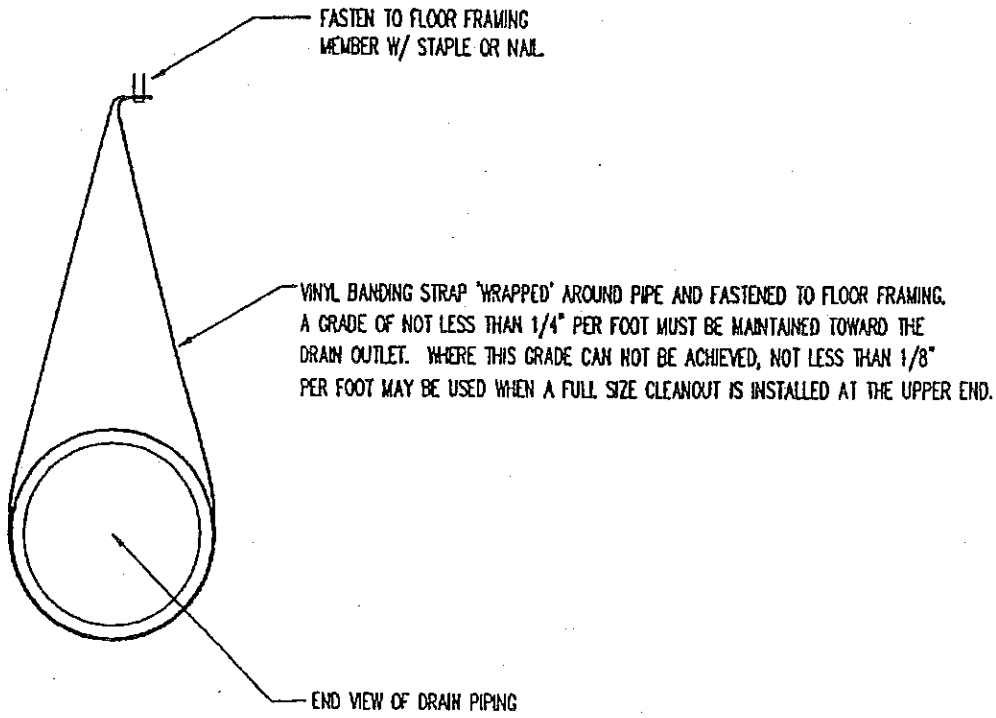

NOTES:

1. PIPE CLEANER AND GLUE SHALL ALSO BE SUPPLIED BY THE MANUFACTURER FOR PLUMBING CONNECTIONS.
2. 48" O.C. MAX. SUPPORT SPACING.

DAPIA APPROVAL: REV.

NTA INC.

JUL 29 1997

JACOBSEN HOMES
P.O. BOX 368
SAFETY HARBOR, FLORIDA 34695
PHONE (813) 726-1138

NOTICE:
THESE SPECIFICATIONS AND DRAWINGS ARE ORIGINAL, PROPRIETARY, AND CONFIDENTIAL MATERIALS OF JACOBSEN MANUFACTURING INC. SUCH MATERIALS ARE PROVIDED TO THE RECIPIENT FOR SPECIFIC PURPOSES AND MUST BE KEPT CONFIDENTIAL AND SECRET FROM OTHERS.

DRAWN BY: R.R.	DATE: 7-17-97	REV. LETTER: A
DRAWING TITLE: PLUMBING SUPPORT		
DRAWING NUMBER: AD-PL-0001		

ON SITE PITCHED ROOF DETAILS

IMPORTANT NOTICE

THE ON SITE PITCHED ROOF INSTALLATION (INCLUDING SHINGLES AND CAP) MUST BE COMPLETED WITHIN 60 DAYS OF DELIVERY TO THE HOME SITE.

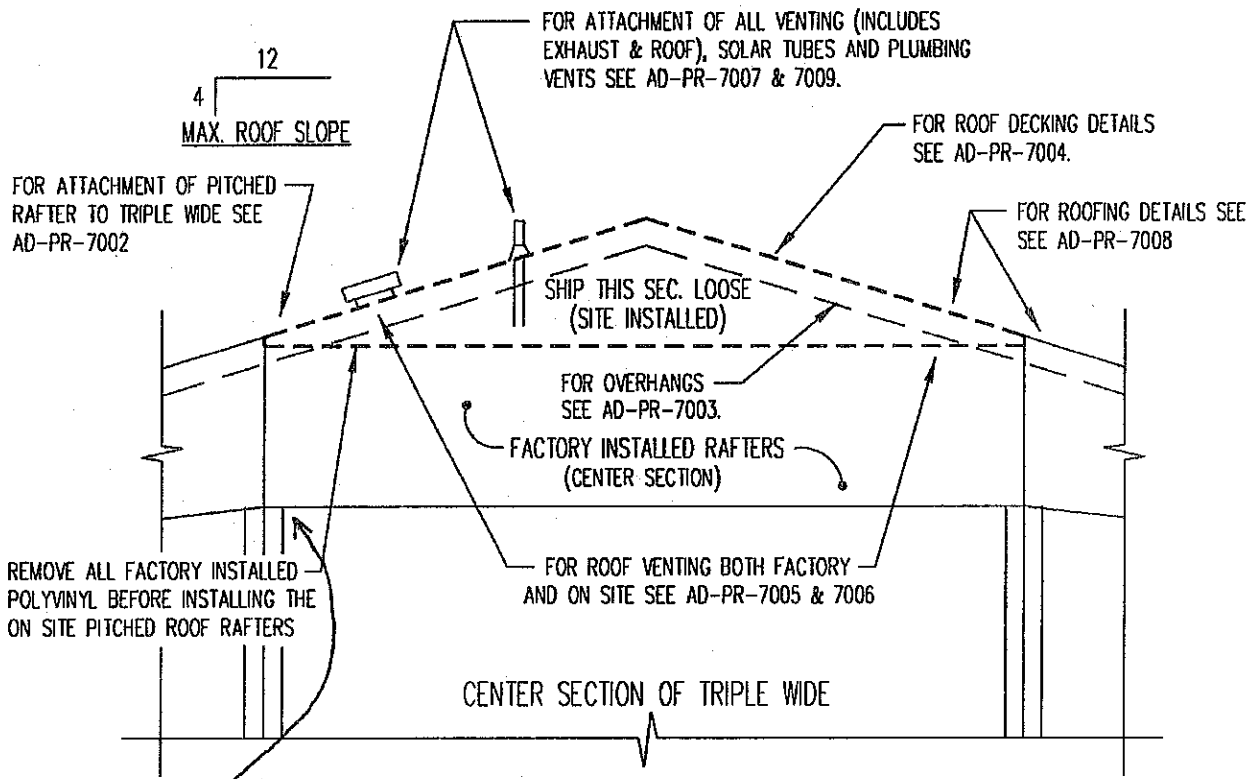

REF. PG. IW-07-0011 FOR FASTENING

TYPICAL TRIPLE WIDE HOME WITH SITE INSTALLED PITCHED CENTER SECTION RAFTERS

NOTES:

DAPIA APPROVAL:

APPROVED BY NTA INC. Revised Oct 25,2007

FEDERAL MANUFACTURED HOME CONSTRUCTION AND SAFETY STANDARDS

JACOBSEN HOMES

P.O. BOX 368
SAFETY HARBOR, FLORIDA 34695
PHONE (727) 726-1138

NOTICE:
THESE SPECIFICATIONS AND DRAWINGS ARE ORIGINAL, PROPRIETARY, AND CONFIDENTIAL MATERIALS OF JACOBSEN MANUFACTURING INC. SUCH MATERIALS ARE PROVIDED TO THE RECIPIENT FOR SPECIFIC PURPOSES AND MUST BE KEPT CONFIDENTIAL AND SECRET FROM OTHERS.

DRAWN BY: O.A.	DATE: 10-24-07	REV. LETTER: B
DRAWING TITLE: ON SITE PITCHED ROOF DETAILS		
DRAWING NUMBER: AD-PR-7001		

ROOF TO ROOF ATTACHMENT

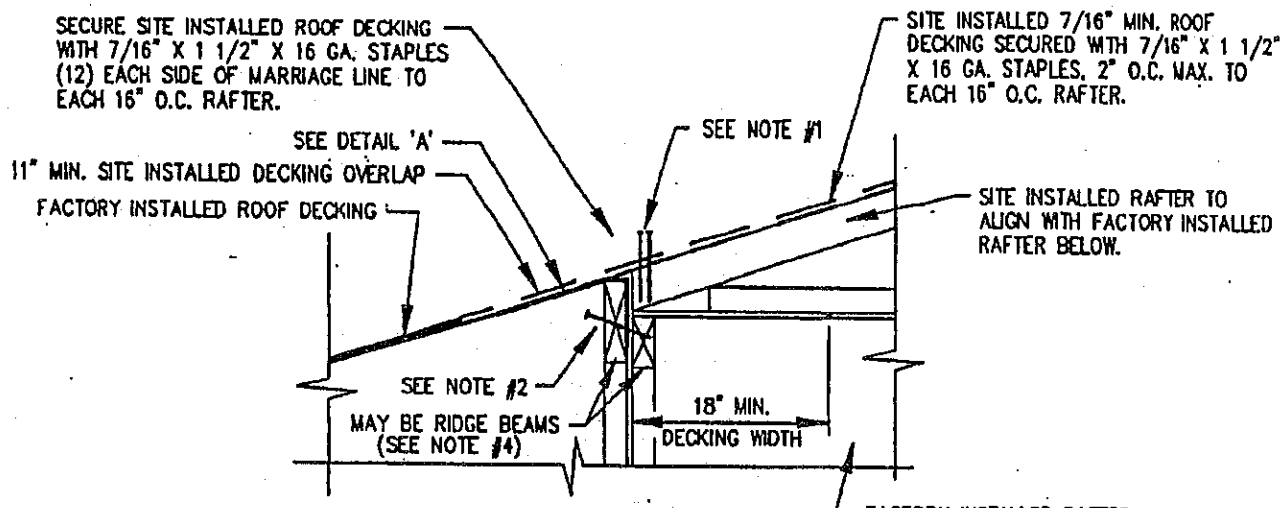

CROSS-SECTION

WINDZONE 'II'
ALL EXPOSURES
(110 MPH)
20 PSF ROOF
10 PSF D.L

REF. PG. RC-07-0044

NDS01

REF. CALCS. C-FS3 - 88.01

NOTES:

1. SECURE EACH 16" O.C. RAFTER TO RAIL BELOW WITH 2-#10 X 4 1/2" SCREWS AT EACH RAFTER END. SITE INSTALLED PITCHED RAFTER TO ALIGN WITH FACTORY INSTALLED RAFTER. (EA. SCREW TO HAVE 1 1/4" PENETRATION MIN.)
2. ATTACH MATE LINE RAFTER RAILS (OR RIDGE BEAMS) WITH #10 X 4 1/2" SCREWS 9" O.C. MAX. SPACING.
3. SEE AD-FA-0020 FOR GAP TREATMENT BETWEEN SECTIONS.

ENGINEER APPROVAL:

6/6/06
John C. Doeden, P.E.
K2 Engineering, Inc.

DAPIA APPROVAL:

APPROVED BY
NTA INC.
Jun 09,2006
FEDERAL MANUFACTURED HOME CONSTRUCTION AND SAFETY STANDARDS

JACOBSEN HOMES
P.O. BOX 368
SAFETY HARBOR, FLORIDA 34695
PHONE (727) 726-1138

NOTICE:
THESE SPECIFICATIONS AND DRAWINGS ARE ORIGINAL, PROPRIETARY, AND CONFIDENTIAL MATERIALS OF JACOBSEN MANUFACTURING INC. SUCH MATERIALS ARE PROVIDED TO THE RECIPIENT FOR SPECIFIC PURPOSES AND MUST BE KEPT CONFIDENTIAL AND SECRET FROM OTHERS.

DRAWN BY:	DATE:	REV. LETTER:
O.A.	06-02-06	A

DRAWING TITLE: ROOF TO ROOF ATTACHMENT

DRAWING NUMBER: AD-PR-7002

END ZONE RAFTER/OVERHANG ASSEMBLY
ALT. CONSTR. RAFTERS

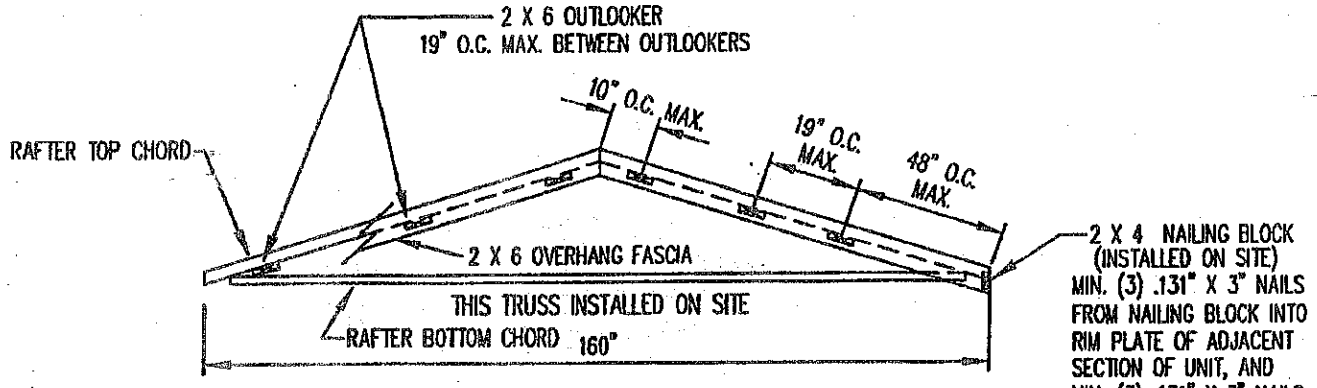

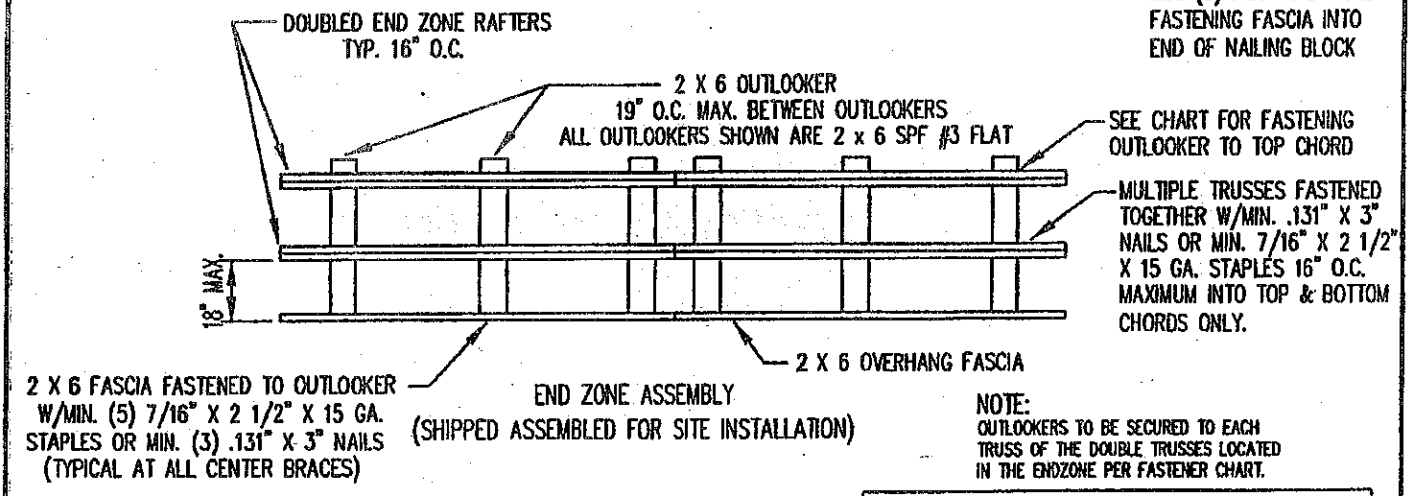

END ZONE ASSEMBLY
(SHIPPED ASSEMBLED FOR SITE INSTALLATION)

NOTE:
OUTLOOKERS TO BE SECURED TO EACH TRUSS OF THE DOUBLE TRUSSES LOCATED IN THE ENDZONE PER FASTENER CHART.

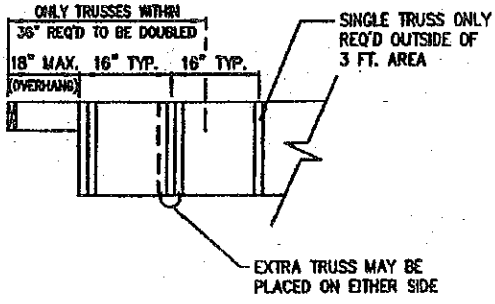

TYP. OUTLOOKER FASTENING:		
FASTENERS:	QUANTITY:	PENETRATION:
.131 PD NAIL	5	1 1/2"
15 GA. STAPLE	8	1"
#8 SCREW	2	1" (INCL. TIP)

OUTLOOKER FASTENERS MAY BE INSTALLED FROM TOP CHORD DOWN IF PENETRATION IS MAINTAINED.

WINDZONE 111
ALL EXPOSURES
(110 MPH)
20 PSF ROOF
10 PSF D.L.

NDS01

REF. CALCS. C-RC-197.01-197.02

NOTES:

1. ALL TRUSSES LOCATED WITHIN 36" OF THE END OF THE ROOF SECTION TO BE DOUBLED.
2. SEE OTHER DETAILS FOR TYPICAL ROOF FRAMING.
3. EACH TRUSS IN END ZONE AREAS ARE REQUIRED TO BE FASTENED PER AD-PR-7002.

ENGINEER APPROVAL:
1/29/08
John C. Doeden, P.E.
K2 Engineering, Inc.

DAPIA APPROVAL:
APPROVED BY
NTA INC.
Feb 05,2008
FEDERAL MANUFACTURED HOME CONSTRUCTION AND SAFETY STANDARDS

JACOBSEN HOMES
P.O. BOX 368
SAFETY HARBOR, FLORIDA 34695
PHONE (727) 726-1138

NOTICE:
THESE SPECIFICATIONS AND DRAWINGS ARE ORIGINAL, PROPRIETARY, AND CONFIDENTIAL MATERIALS OF JACOBSEN MANUFACTURING INC. SUCH MATERIALS ARE PROVIDED TO THE RECIPIENT FOR SPECIFIC PURPOSES AND MUST BE KEPT CONFIDENTIAL AND SECRET FROM OTHERS.

DRAWN BY:	DATE:	REV. LETTER:
O.A.	1-29-08	A

DRAWING TITLE: END ZONE RAFTER/OVERHANG ASSEMBLY
DRAWING NUMBER: AD-PR-7003

ON SITE PITCHED ROOF DECKING INSTALLATION

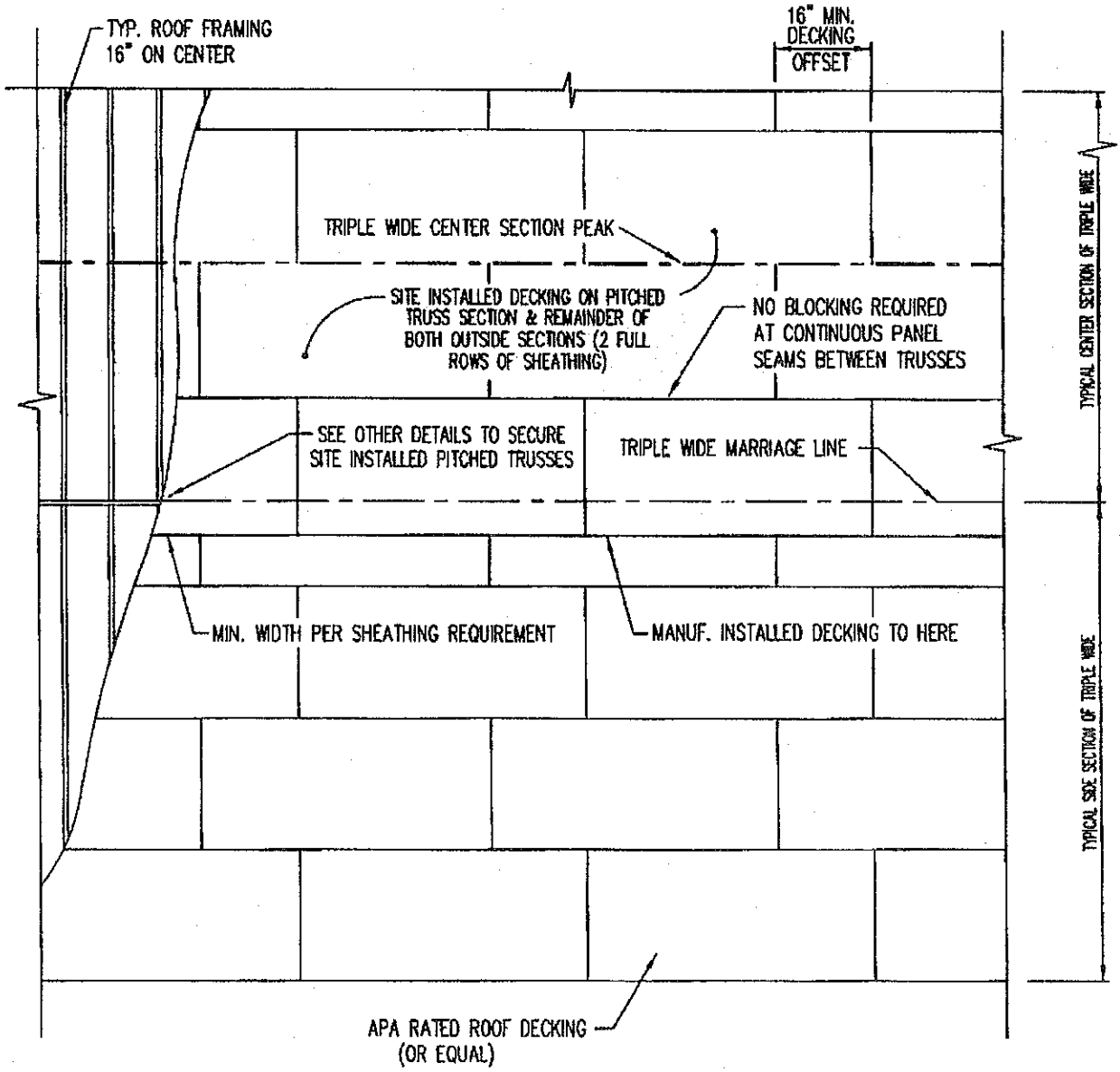

WINDZONE III
ALL EXPOSURES
(110 MPH)
20 PSF ROOF
10 PSF D.L.

NOTES:

1. 1/8" MAXIMUM GAP AND 1/16" MINIMUM GAP BETWEEN DECKING PERPENDICULAR AND PARALLEL TO TRUSSES.
2. ROOF DECKING MATERIAL TO BE 7/16" APA RATED ROOF (24/0 SPAN RATED) DECKING (EQUAL OR BETTER).
3. OTHER TRIPLE WIDE SECTION (NOT SHOWN) WILL BE THE SAME DECKING PATTERN.
4. FASTEN DECKING TO ROOF FRAMING WITH 7/16 X 1 1/2" X 15 GA. STAPLES AT 3" O/C EDGES AND FIELD

ENGINEER APPROVAL:

10/24/07
John C. Doedden, P.E.
K2 Engineering, Inc.

DAPIA APPROVAL:

APPROVED BY
NTA INC.
Revised
Oct. 29,2007
FEDERAL MANUFACTURED HOME CONSTRUCTION AND SAFETY STANDARDS

JACOBSEN HOMES
P.O. BOX 368
SAFETY HARBOR, FLORIDA 34695
PHONE (727) 726-1138

NOTICE:
THESE SPECIFICATIONS AND DRAWINGS ARE ORIGINAL, PROPRIETARY, AND CONFIDENTIAL MATERIALS OF JACOBSEN MANUFACTURING INC. SUCH MATERIALS ARE PROVIDED TO THE RECIPIENT FOR SPECIFIC PURPOSES AND MUST BE KEPT CONFIDENTIAL AND SECRET FROM OTHERS.

DRAWN BY:	DATE:	REV. LETTER:
O.A.	10-24-07	A

DRAWING TITLE: ON SITE PITCHED ROOF DECKING INST.

DRAWING NUMBER: AD-PR-7004

SITE INSTALLED PITCHED ROOF VENTING

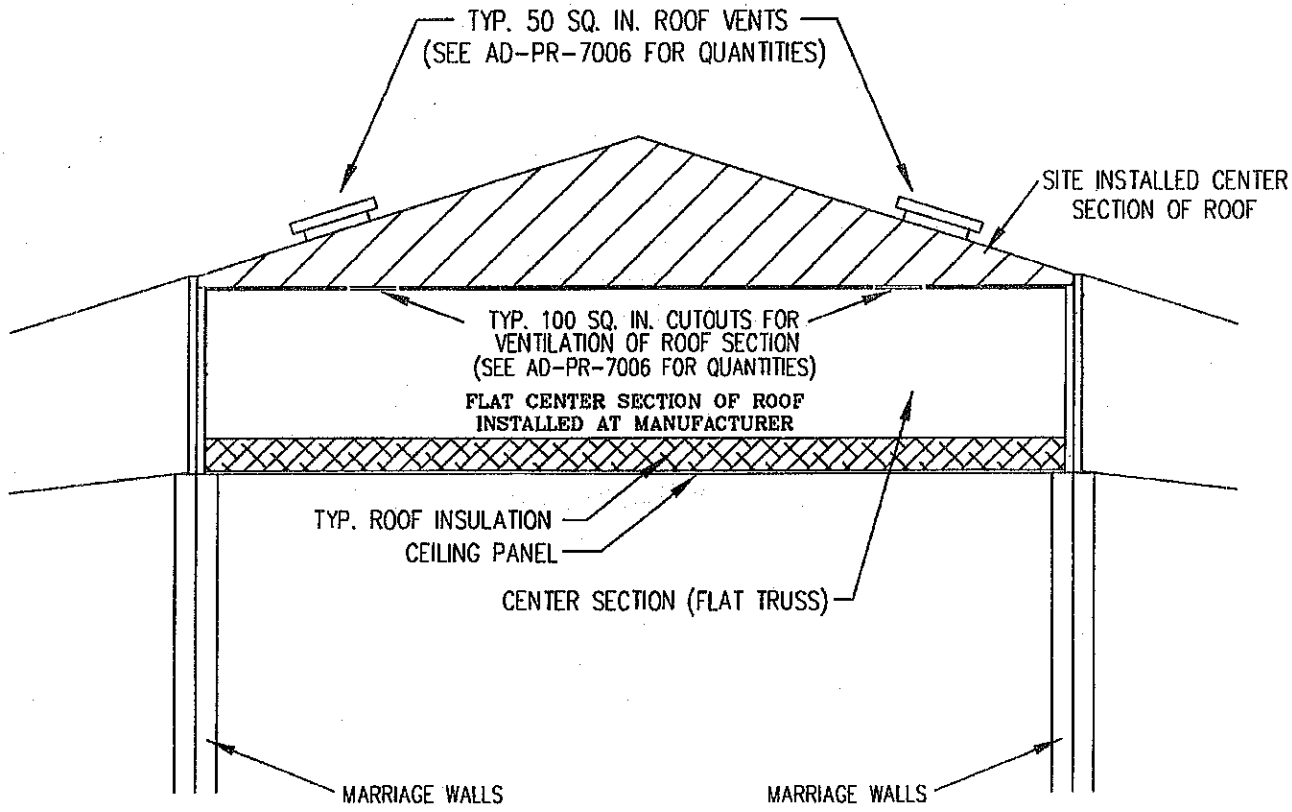

FLAT CENTER SECTION

NOTES:

DAPIA APPROVAL:

APPROVED BY NTA INC. Revised Oct 25,2007

FEDERAL MANUFACTURED HOME CONSTRUCTION AND SAFETY STANDARDS

JACOBSEN HOMES
P.O. BOX 368
SAFETY HARBOR, FLORIDA 34695
PHONE (727) 726-1138

NOTICE:
THESE SPECIFICATIONS AND DRAWINGS ARE ORIGINAL, PROPRIETARY, AND CONFIDENTIAL MATERIALS OF JACOBSEN MANUFACTURING INC. SUCH MATERIALS ARE PROVIDED TO THE RECIPIENT FOR SPECIFIC PURPOSES AND MUST BE KEPT CONFIDENTIAL AND SECRET FROM OTHERS.

DRAWN BY: O.A.	DATE: 10-24-07	REV. LETTER:
DRAWING TITLE: SITE INSTALLED PITCHED ROOF VENTS		A
DRAWING NUMBER: AD-PR-7005		

ROOF VENTING

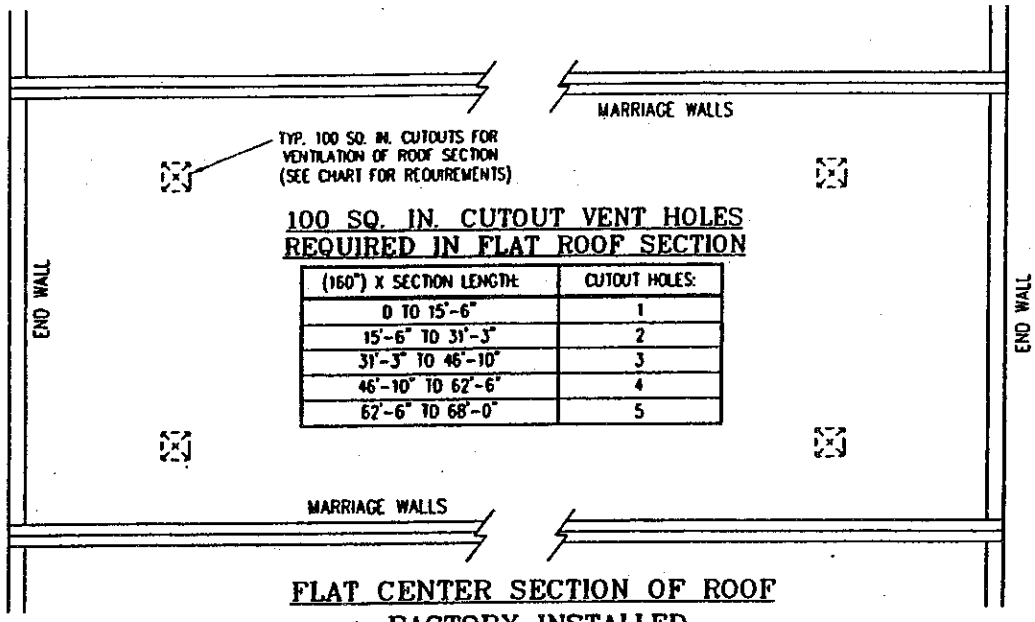

100 SQ. IN. CUTOUT VENT HOLES REQUIRED IN FLAT ROOF SECTION

(160") X SECTION LENGTH:	CUTOUT HOLES:
0 TO 15'-6"	1
15'-6" TO 31'-3"	2
31'-3" TO 46'-10"	3
46'-10" TO 62'-6"	4
62'-6" TO 68'-0"	5

FLAT CENTER SECTION OF ROOF FACTORY INSTALLED

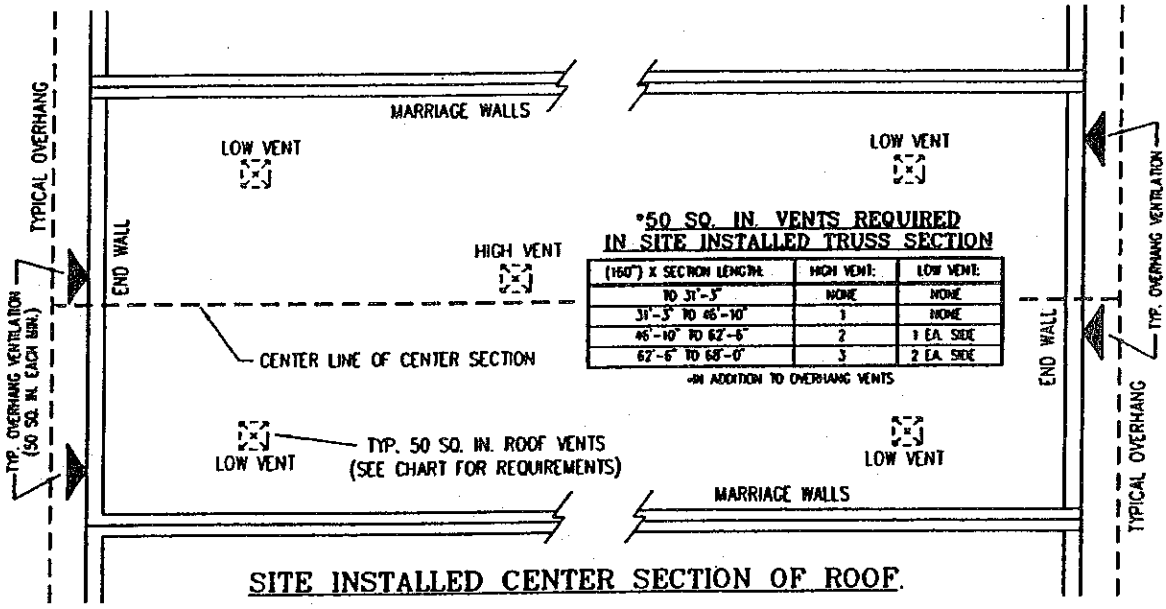

***50 SQ. IN. VENTS REQUIRED IN SITE INSTALLED TRUSS SECTION**

(160") X SECTION LENGTH:	HIGH VENT:	LOW VENT:
TO 31'-3"	NONE	NONE
31'-3" TO 46'-10"	1	NONE
46'-10" TO 62'-6"	2	1 EA. SIDE
62'-6" TO 68'-0"	3	2 EA. SIDE

*IN ADDITION TO OVERHANG VENTS

SITE INSTALLED CENTER SECTION OF ROOF

NOTES:

DAPIA APPROVAL:

APPROVED BY NTA INC. JUN 10 2004

FEDERAL MANUFACTURED HOME CONSTRUCTION AND SAFETY STANDARDS

JACOBSEN HOMES

P.O. BOX 368
SAFETY HARBOR, FLORIDA 34695
PHONE (727) 726-1138

NOTICE:
THESE SPECIFICATIONS AND DRAWINGS ARE ORIGINAL, PROPRIETARY, AND CONFIDENTIAL MATERIALS OF JACOBSEN MANUFACTURING INC. SUCH MATERIALS ARE PROVIDED TO THE RECIPIENT FOR SPECIFIC PURPOSES AND MUST BE KEPT CONFIDENTIAL AND SECRET FROM OTHERS.

DRAWN BY: R.R.	DATE: 01-22-04	REV. LETTER: —
DRAWING TITLE: ROOF VENTING		
DRAWING NUMBER: AD-PR-7006		

PITCHED ROOF EXTENDED VENTS

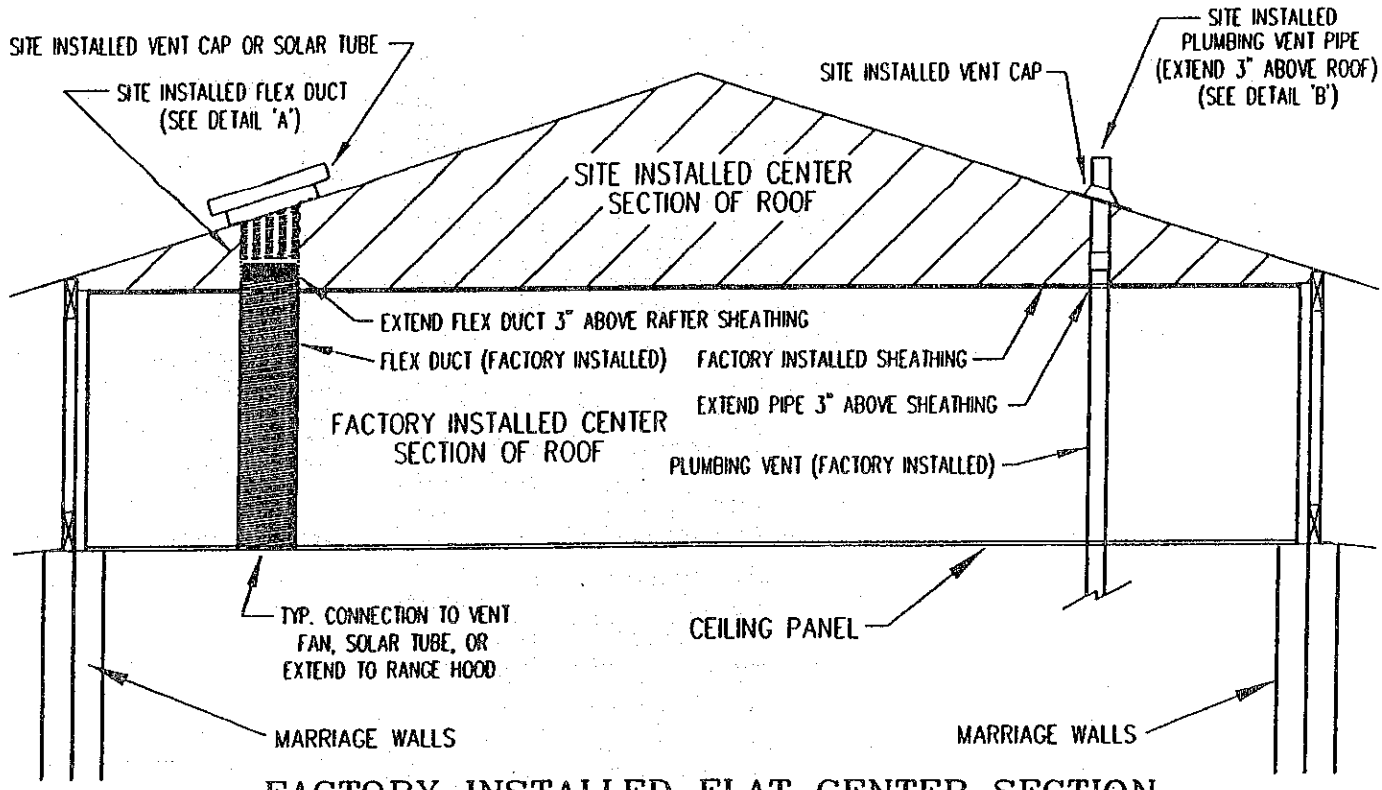

FACTORY INSTALLED FLAT CENTER SECTION

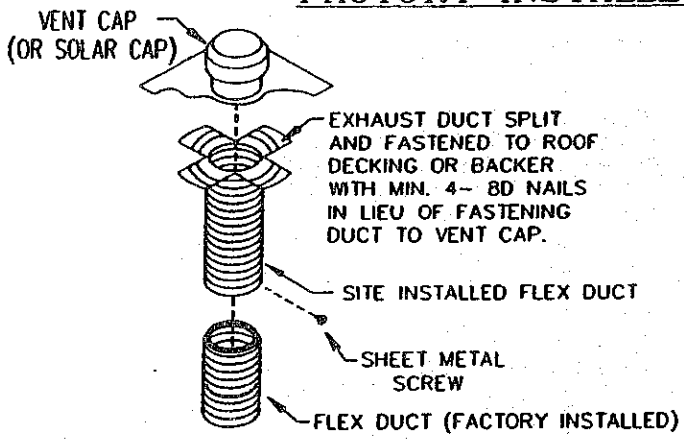

NOTE: EXHAUST DUCT (FLEX DUCT OR RIGID) SECURED WITH 1 SHEET METAL SCREW MINIMUM AND ALUMINUM TAPE TO SEAL AROUND DUCT AFTER SCREW IS IN PLACE.

DETAIL 'A'

PLUMBING VENT

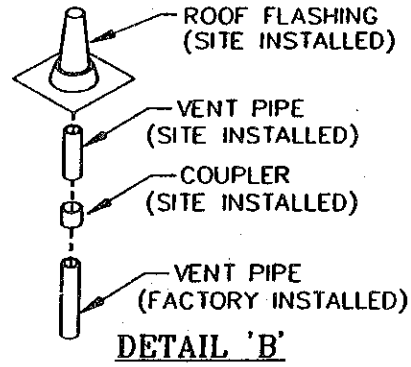

DETAIL 'B'

NOTES:

1. FOR VENTS NOT SHOWN INSTALL PER MANUFACTURERS SPECIFICATIONS.
2. SEE OTHER DETAILS FOR ROOF FLASHING INSTALLATION.
3. EXHAUST DUCT MAY BE RUN THROUGH EITHER A SQUARE OR ROUND HOLE CUT IN ROOF DECKING.
4. RANGE AND BATH/AIR QUALITY FLEX DUCTS TO BE SPLICED WITH ALUMINUM TAPE AS SHOWN IN THE DETAIL ABOVE.
5. SECURE SITE INSTALLED PLUMBING VENT PIPE INTO COUPLER WITH APPROVED GLUE.

DAPIA APPROVAL:

APPROVED BY

NIA INC. JUN 10 2004

FEDERAL MANUFACTURED HOME CONSTRUCTION AND SAFETY STANDARDS

JACOBSEN HOMES

P.O. BOX 368
SAFETY HARBOR, FLORIDA 34695
PHONE (727) 726-1138

NOTICE: THESE SPECIFICATIONS AND DRAWINGS ARE ORIGINAL, PROPRIETARY, AND CONFIDENTIAL MATERIALS OF JACOBSEN MANUFACTURING INC. SUCH MATERIALS ARE PROVIDED TO THE RECIPIENT FOR SPECIFIC PURPOSES AND MUST BE KEPT CONFIDENTIAL AND SECRET FROM OTHERS.

DRAWN BY:	DATE:	REV. LETTER:
R.R.	01-23-04	—

DRAWING TITLE: PITCHED ROOF EXTENDED VENTS

DRAWING NUMBER: AD-PR-7007

SITE INSTALLED SHINGLE AND UNDERLAYMENT

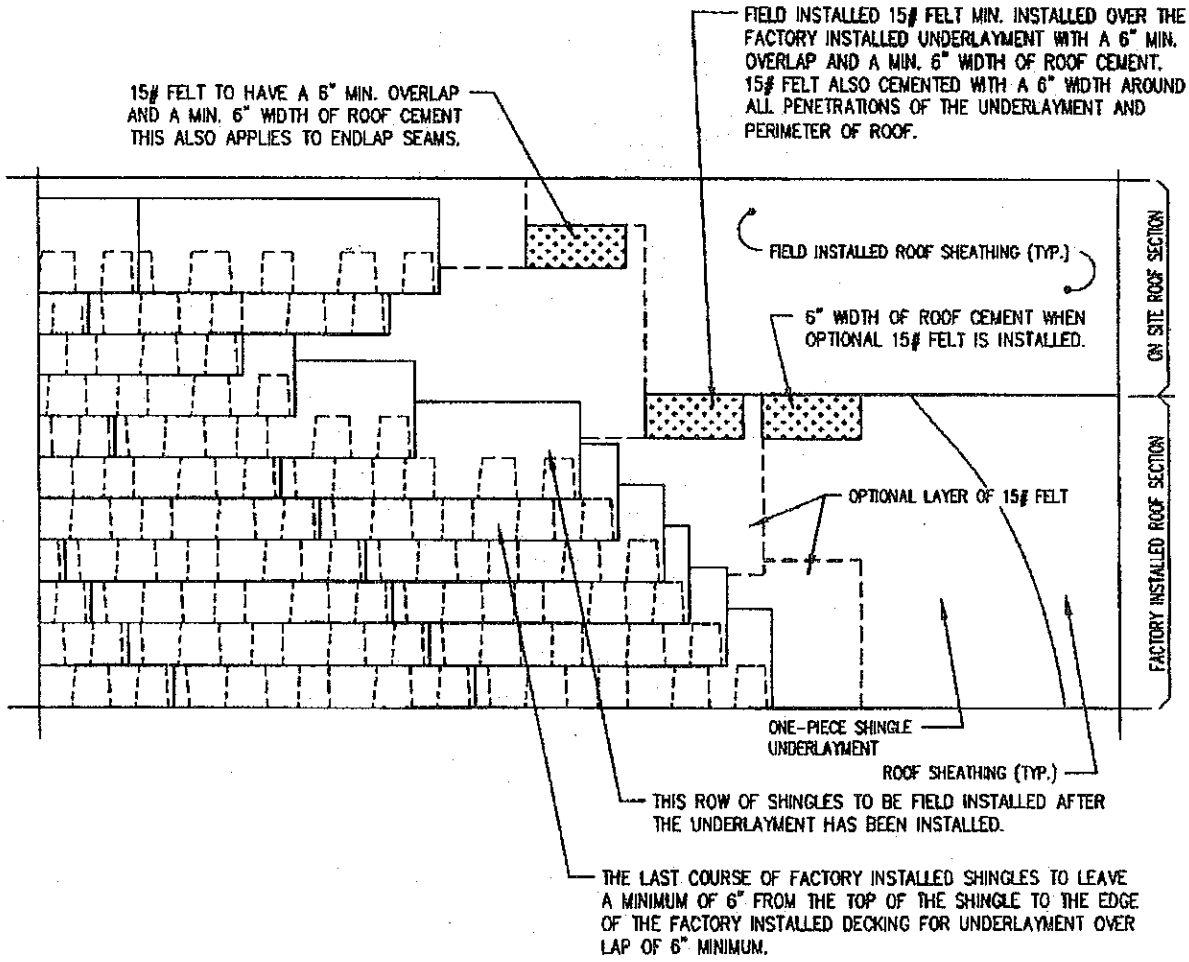

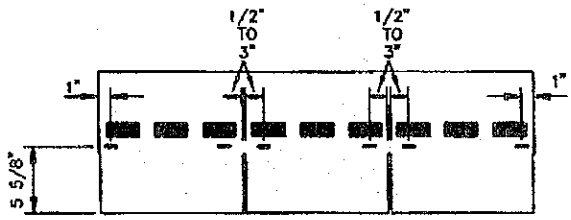

FASTENING DETAIL

WINDZONE III
(110 MPH)
ALL EXPOSURES

NOTES:

1. CEMENTING OF OPTIONAL 15# FELT IS NOT REQUIRED IN ANY AREA EXCEPT WHERE NOTED.
2. FASTENING OF OPTIONAL 15# FELT IS NOT REQUIRED. (FASTENERS APPLIED ARE JUST TO HOLD FELT IN PLACE UNTIL SHINGLES ARE INSTALLED.)
3. SHINGLES INSTALLED PER MANUFACTURERS INSTALLATION INSTRUCTIONS ONLY WHEN SPECIFIC APPLICATIONS ARE NOT COVERED.

ENGINEER APPROVAL:

John C. Dodden, P.E.
K2 Engineering, Inc.

DAPIA APPROVAL:

APPROVED BY
NTA INC.
Revised Oct 29,2007
FEDERAL MANUFACTURED HOME CONSTRUCTION AND SAFETY STANDARDS

JACOBSEN HOMES
P.O. BOX 368
SAFETY HARBOR, FLORIDA 34695
PHONE (813) 726-1138

NOTICE:
THESE SPECIFICATIONS AND DRAWINGS ARE ORIGINAL, PROPRIETARY, AND CONFIDENTIAL MATERIALS OF JACOBSEN MANUFACTURING INC. SUCH MATERIALS ARE PROVIDED TO THE RECIPIENT FOR SPECIFIC PURPOSES AND MUST BE KEPT CONFIDENTIAL AND SECRET FROM OTHERS.

DRAWN BY:	DATE:	REV. LETTER:
O.A.	10-24-07	A

DRAWING TITLE: SITE INSTALLED SHINGLE AND UNDERLAYMENT

DRAWING NUMBER: AD-PR-7008

TYPICAL FLASHING INSTALLATION

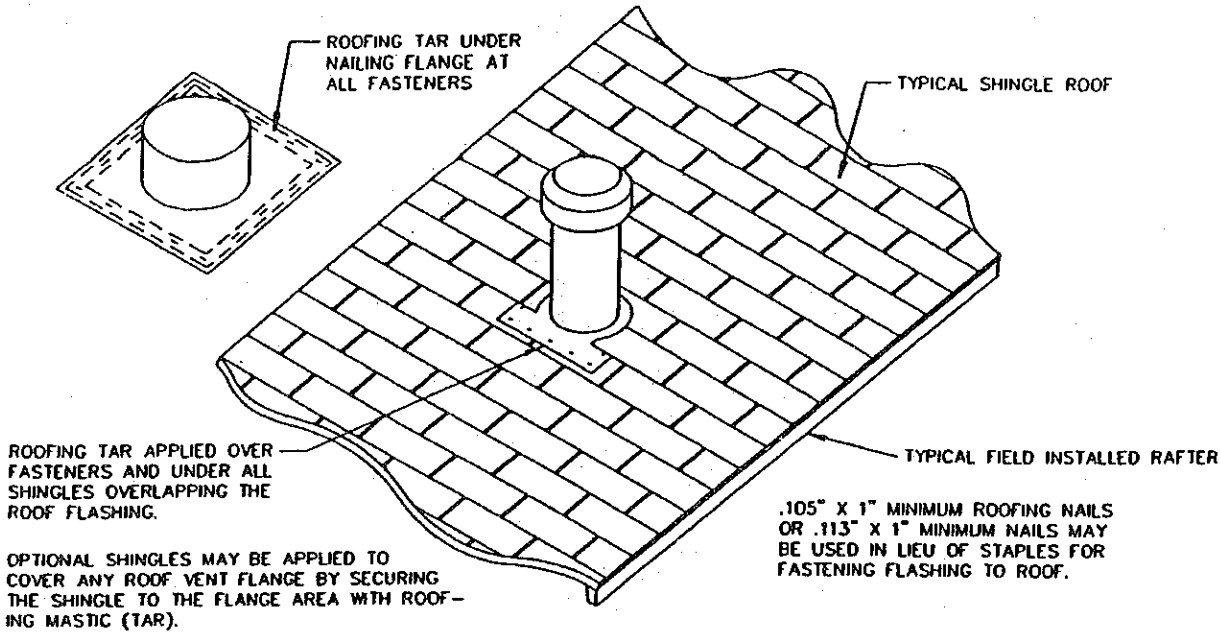

OPT. SOLAR TUBE INSTALLATION

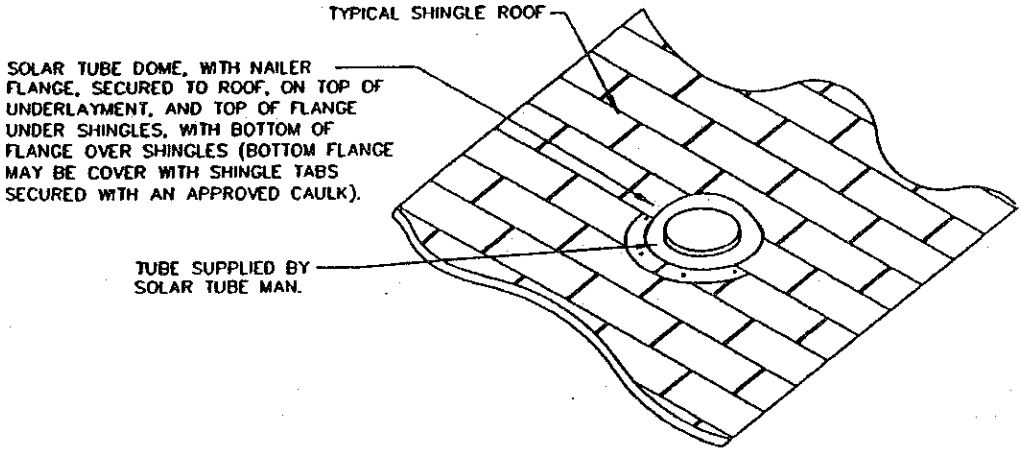

NOTES:

1. ROOF FLANGE FASTENED TO SHINGLE ROOF WITH MIN. 1" X 1" X 16 GA. STAPLES 6" O.C. (SHINGLES APPLIED UNDER LOWER END OF FLANGE).

DAPIA APPROVAL:

APPROVED BY NTA INC. JUN 10 2004

FEDERAL MANUFACTURED HOME CONSTRUCTION AND SAFETY STANDARDS

JACOBSEN HOMES
P.O. BOX 368
SAFETY HARBOR, FLORIDA 34695
PHONE (813) 726-1138

NOTICE:
THESE SPECIFICATIONS AND DRAWINGS ARE ORIGINAL, PROPRIETARY, AND CONFIDENTIAL MATERIALS OF JACOBSEN MANUFACTURING INC. SUCH MATERIALS ARE PROVIDED TO THE RECIPIENT FOR SPECIFIC PURPOSES AND MUST BE KEPT CONFIDENTIAL AND SECRET FROM OTHERS.

DRAWN BY: M.T.	DATE: 02-04-04	REV. LETTER: —
DRAWING TITLE: TYP. FLASHING INSTALLATION		
DRAWING NUMBER: AD-PR-7009		

ADDENDUM

GENERAL NOTES / TIE-DOWNS

NOTES:

1. FRAME TIE-DOWNS SHALL BE INSTALLED TO PROPERLY SECURE THE HOME.
2. VERTICAL TIE-DOWNS ARE REQUIRED IN ADDITION TO THE FRAME TIE-DOWNS.
3. VERTICAL TIES MAY BE SECURED TO THE SAME GROUND ANCHOR AS THE FRAME TIE-DOWNS WHEN A DOUBLE HEADED ANCHOR IS USED AND IS CAPABLE OF RESISTING THE COMBINED LOADING. WHEN ANCHORS ARE NOT INSTALLED AT THE ANGLE(S) SPECIFIED IN THE TABLE(S), A STABILIZER PLATE MUST BE INSTALLED IN ACCORDANCE WITH THE ANCHOR MANUFACTURER'S INSTRUCTIONS.
4. FRAME TIE-DOWNS AND ANCHORS ARE NOT SUPPLIED BY JACOBSEN HOMES (TO BE SUPPLIED BY OTHERS).
5. VERTICAL TIE STRAPS MAY BE SUPPLIED BY JACOBSEN HOMES OR ANCHOR BRACKET MAY BE INSTALLED BY JACOBSEN HOMES FOR ATTACHMENT OF VERTICAL TIE STRAPS, IN EITHER CASE ALL ANCHORS AND END TREATMENTS ARE TO BE SUPPLIED BY OTHERS.
6. ALL GROUND ANCHORS AND FRAME TIES SHALL BE INSTALLED PER THE MANUFACTURER'S INSTALLATION INSTRUCTIONS. GROUND ANCHORS AND FRAME TIES ARE NOT TO EXTEND BEYOND THE EXTERIOR WALL OF THE UNIT.
7. STEEL ANCHORING EQUIPMENT EXPOSED TO THE WEATHER SHALL BE PROTECTED WITH A MIN. OF 0.30 OZ. OF ZINC COATING PER SQUARE FOOT OF STEEL.
8. DESIGN BASED ON 95 1/2" I-BEAM SPACING AND A MAXIMUM SIDEWALL HEIGHT OF 8'-0" (82" I-BEAM SPACING IS ACCEPTABLE FOR 10' WIDE SECTIONS OF MULTI-WIDE UNITS W/ 90" SIDEWALL HEIGHT ONLY).
9. LONGITUDINAL TIES SHALL BE INSTALLED ON THE INSIDE OF EACH I-BEAM AT THE CROSS-MEMBER LOCATIONS OR PER ALTERNATE DETAILS IN ACCORDANCE WITH THE SPACING TABLES AND NOTES 4, 6, 7 AND 16.
10. FRAME TIE-DOWNS SHALL BE "WRAPPED" AROUND THE MAIN I-BEAM (AS SHOWN ON TYP. CROSS-SECTION DETAILS) AND SHALL COME OFF THE TOP FLANGE OF THE I-BEAM WITH AN APPROVED BUCKLE OR LOOP.
11. ANCHORS SHOULD BE CERTIFIED FOR THESE CONDITIONS BY A PROFESSIONAL ENGINEER, ARCHITECT OR A NATIONALLY RECOGNIZED TESTING LABORATORY AS TO THEIR RESISTANCE BASED ON THE INSTALLED ANGLE OF THE DIAGONAL TIE AND/OR VERTICAL LOADING AND ANGLE OF ANCHOR INSTALLATION AND TYPE OF SOIL IN WHICH THE ANCHOR IS TO BE INSTALLED.
12. GROUND ANCHORS SHOULD BE EMBEDDED BELOW THE FROST LINE AND BE AT LEAST 12" ABOVE THE WATER TABLE.
13. GROUND ANCHORS SHOULD BE INSTALLED TO THEIR FULL DEPTH, AND STABILIZER PLATES SHOULD BE INSTALLED TO PROVIDE ADDED RESISTANCE TO OVERTURNING OR SLIDING FORCES.
14. ANCHORING EQUIPMENT SHOULD BE BY A REGISTERED PROFESSIONAL ENGINEER OR ARCHITECT TO RESIST THESE SPECIFIED FORCES IN ACCORDANCE WITH TESTING PROCEDURES IN ASTM STANDARD SPECIFICATION D3593-91, STANDARD SPECIFICATION FOR STRAPPING, FLAT STEEL AND SEALS.
15. ALL GROUND ANCHORS TO BE RATED FOR LOAD LISTED IN TABLES, TIMES 1.5 SAFETY FACTOR OR AN ULTIMATE LOAD OF 4725# (3150# DESIGN LOAD), WHICHEVER IS GREATER. VALUES IN THE TABLES ARE DESIGN LOAD VALUES.
16. A MAXIMUM OF TWO LONGITUDINAL TIE-DOWN STRAPS MAY BE INSTALLED AT A SINGLE CROSS-MEMBER LOCATION. IF MORE THAN TWO LONGITUDINAL TIE-DOWNS ARE REQUIRED (SEE APPROPRIATE SPACING TABLES) ADDITIONAL CROSS-MEMBERS MUST BE USED FOR ATTACHMENT OF STRAP(S) (OR SEE OTHER DETAILS FOR ALTERNATE STRAP ATTACHMENT).
17. LONGITUDINAL TIE-DOWN STRAP(S) MAY BE INSTALLED AT AN ANGLE NOT PERPENDICULAR TO THE CROSS-MEMBER TO WHICH IT IS ATTACHED (SEE NOTE 16) IF REQUIRED TO MISS PIER LOCATIONS OR OTHER OBSTRUCTION(S).
18. ALL FIGURES (DETAILS) SHOWN IN THIS SECTION ARE TYPICALS ONLY. REFER TO THE APPROPRIATE TABLES FOR THE REQUIRED NUMBER, SPACING AND/OR SPECS OF SPECIFIC TIE-DOWNS AND ANCHORS REQUIRED.
19. SEE OTHER DETAILS IN THE SET-UP MANUAL AND ADDENDUM FOR BLOCKING REQUIREMENTS. ALL BLOCKING DETAILS CONTAINED WITHIN THIS MANUAL ARE APPLICABLE FOR ALL ZONES AND ALL EXPOSURES.

NOTES:

THESE NOTES AND DETAILS ARE APPLICABLE FOR WIND ZONE II AND/OR WIND ZONE III. THEY ARE ALSO APPLICABLE TO BOTH EXPOSURE 'C' AND EXPOSURE 'D'. SEE APPROPRIATE TABLES FOR SPECIFIC INFORMATION ON EACH.

ENGINEER APPROVAL: JOHN C. DOEDEN REGISTERED No. ENE8703571 STATE OF INDIANA PROFESSIONAL ENGINEER 6/9/1

DAPIA APPROVAL: APPROVED BY JUN 15 1995 NTA INC. NATIONAL MANUFACTURED HOME CONSTRUCTION AND SAFETY STANDARDS

JACOBSEN HOMES
P.O. BOX 368
SAFETY HARBOR, FLORIDA 34695
PHONE (813) 726-1138

NOTICE:
THESE SPECIFICATIONS AND DRAWINGS ARE ORIGINAL, PROPRIETARY, AND CONFIDENTIAL MATERIALS OF JACOBSEN MANUFACTURING INC. SUCH MATERIALS ARE PROVIDED TO THE RECIPIENT FOR SPECIFIC PURPOSES AND MUST BE KEPT CONFIDENTIAL AND SECRET FROM OTHERS.

DRAWN BY: C.L.Y.	DATE: 5-19-95	REV. LETTER: A
DRAWING TITLE: TD-GENERAL NOTES		
DRAWING NUMBER: AD-TD-0001		

ADDENDUM

NORMAL TIE-DOWN SPACING TABLES
ZONE II & III/EXP. C & D

SEE FIGURES 1.0 & 1.1

EXPOSURE 'C'

LONGITUDINAL TIE-DOWN SPACING TABLE

MIN. FLOOR WIDTH	WIND ZONE II		WIND ZONE III	
	MIN. QTY. EA. END OF EA. SECTION	ANCHOR ANGLE MIN. θ	MIN. QTY. EA. END OF EA. SECTION	ANCHOR ANGLE MIN. θ
20'-0"	2	36°	2	45°
24'-0"	2	46°	2	60°
25'-4"	2	50°	3	38°
26'-8"	2	54°	3	41°

VERTICAL TIE-DOWN / FRAME TIE-DOWN SPACING TABLE

MIN. FLOOR WIDTH	MAX. EAVE OVERHANG	WIND ZONE II			WIND ZONE III		
		SPACING	DBL. HEAD LOAD	ANCHOR ANGLE	SPACING	DBL. HEAD LOAD	ANCHOR ANGLE
20'-0"	12"	8'-0"	3150#	40°-50°	6'-8"	3150#	40°-50°
24'-0"	12"	8'-0"	3150#	40°-50°	6'-8"	3150#	40°-50°
25'-4"	12"	8'-0"	3150#	40°-50°	6'-8"	3150#	40°-50°
26'-8"	12"	8'-0"	3150#	40°-50°	6'-8"	3150#	40°-50°

EXPOSURE 'D'

LONGITUDINAL TIE-DOWN SPACING TABLE

MIN. FLOOR WIDTH	WIND ZONE II		WIND ZONE III	
	MIN. QTY. EA. END OF EA. SECTION	ANCHOR ANGLE MIN. θ	MIN. QTY. EA. END OF EA. SECTION	ANCHOR ANGLE MIN. θ
20'-0"	2	50°	2	68°
24'-0"	2	70°	3	50°
25'-4"	3	45°	3	60°
26'-8"	3	45°	3	60°

VERTICAL TIE-DOWN / FRAME TIE-DOWN SPACING TABLE

MIN. FLOOR WIDTH	MAX. EAVE OVERHANG	WIND ZONE II			WIND ZONE III		
		SPACING	DBL. HEAD LOAD	ANCHOR ANGLE	SPACING	DBL. HEAD LOAD	ANCHOR ANGLE
20'-0"	12"	5'-4"	3150#	40°-45°	4'-0"	3150#	40°-50°
24'-0"	12"	5'-4"	3150#	40°-50°	4'-0"	3150#	40°-50°
25'-4"	12"	5'-4"	3150#	40°-50°	4'-0"	3150#	40°-50°
26'-8"	12"	5'-4"	3150#	40°-50°	4'-0"	3150#	40°-50°

NOTES:

1. SEE AD-TD-0001 FOR ADDITIONAL REQUIREMENTS.
2. SEE AD-TD-0011 FOR MAXIMUM PIER HEIGHTS REQUIRED FOR THE LOADS TABULATED ABOVE.

ENGINEER APPROVAL:

JOHN C. DOEDEN
REGISTERED
No. ENE8703571
STATE OF INDIANA
PROFESSIONAL ENGINEER
6/14/95

DAPIA APPROVAL:

APPROVED BY
JUN 15 1995
NTA INC.
FEDERAL MANUFACTURED HOME CONSTRUCTION AND SAFETY STANDARDS

JACOBSEN HOMES
P.O. BOX 368
SAFETY HARBOR, FLORIDA 34695
PHONE (813) 726-1138

NOTICE:
THESE SPECIFICATIONS AND DRAWINGS ARE ORIGINAL, PROPRIETARY, AND CONFIDENTIAL MATERIALS OF JACOBSEN MANUFACTURING INC. SUCH MATERIALS ARE PROVIDED TO THE RECIPIENT FOR SPECIFIC PURPOSES AND MUST BE KEPT CONFIDENTIAL AND SECRET FROM OTHERS.

DRAWN BY:	DATE:	REV. LETTER:
C.L.Y.	5-30-95	A

DRAWING TITLE: NORM. SPACING TABLES

DRAWING NUMBER: AD-TD-0010

ADDENDUM

TIE-DOWN SYSTEM

TYPICAL SIDE ELEVATION
SHOWING TIE-DOWN SPACINGS

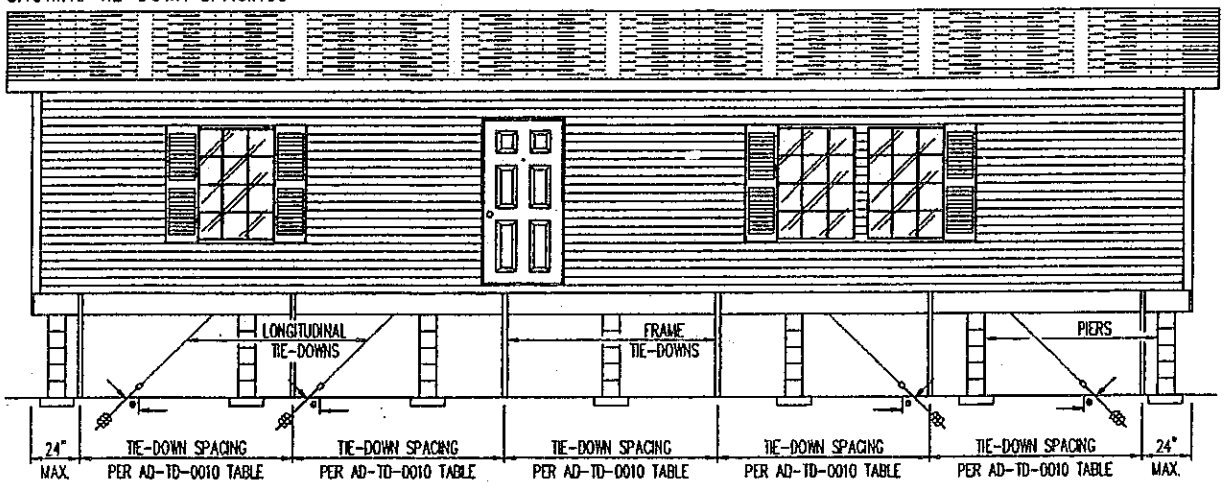

FIGURE 1.0

SEE FIGURE 2.0 FOR ALTERNATE TIE-DOWN METHOD

TYPICAL CROSS SECTION
SHOWING TIEDOWNS

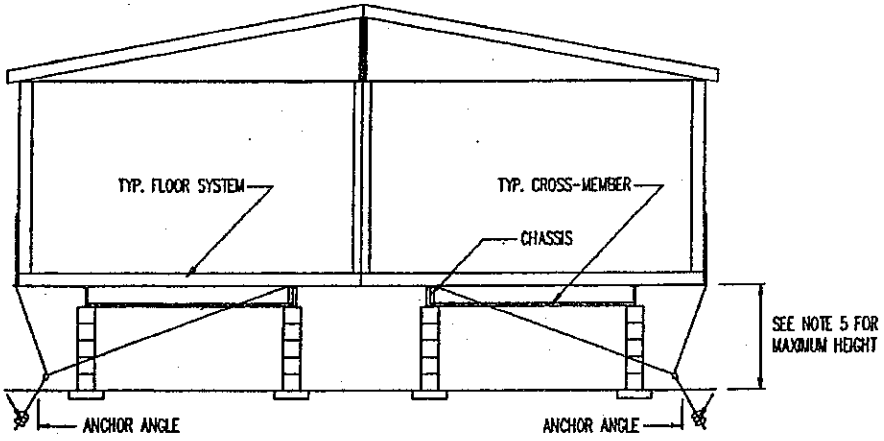

FIGURE 1.1

SEE FIGURE 5.0 FOR ALTERNATE TIE-DOWN METHOD

NOTES:

1. SEE AD-TD-0010 FOR SPACING TABLES.
2. SEE AD-TD-0010 FOR QUANITY OF LONGITUDIAL TIE-DOWN STRAPS REQUIRED.
3. SEE OTHER DETAILS FOR BLOCKING (PIER) QUANTITY AND OTHER REQUIREMENTS.
4. SEE AD-TD-0001 FOR ADDITIONAL REQUIREMENTS.
5. ZONE 2/EXPOSURE 'C': 60" MAXIMUM HEIGHT
   ZONE 2/EXPOSURE 'D': 44" MAXIMUM HEIGHT
   ZONE 3/EXPOSURE 'C': 40" MAXIMUM HEIGHT
   ZONE 3/EXPOSURE 'D': 36" MAXIMUM HEIGHT

ENGINEER APPROVAL: JOHN C. DOEDEN REGISTERED No. ENE8703571 STATE OF INDIANA PROFESSIONAL ENGINEER 6/4/9

DAPIA APPROVAL: APPROVED BY NTA INC. FEDERAL MANUFACTURED HOME CONSTRUCTION AND SAFETY STANDARDS JAN 1 9 200

REF. CALCS:

JACOBSEN HOMES
P.O. BOX 368
SAFETY HARBOR, FLORIDA 34695
PHONE (813) 726-1138

NOTICE:
THESE SPECIFICATIONS AND DRAWINGS ARE ORIGINAL, PROPRIETARY, AND CONFIDENTIAL MATERIALS OF JACOBSEN MANUFACTURING INC. SUCH MATERIALS ARE PROVIDED TO THE RECIPIENT FOR SPECIFIC PURPOSES AND MUST BE KEPT CONFIDENTIAL AND SECRET FROM OTHERS.

DRAWN BY: C.L.Y.	DATE: 3-27-95	REV. LETTER:
DRAWING TITLE: FIGURES 1.0 AND 1.1		
DRAWING NUMBER: AD-TD-0011		

ADDENDUM

NORMAL TIE-DOWN SPACING TABLES
ZONE II & III/EXP. C & D

SEE FIGURES 1.2 & 1.3

EXPOSURE 'C'

LONGITUDINAL TIE-DOWN SPACING TABLE

MIN. FLOOR WIDTH	WIND ZONE II		WIND ZONE III	
	MIN. QTY. EA. END OF EA. SECTION	ANCHOR ANGLE MIN. θ	MIN. QTY. EA. END OF EA. SECTION	ANCHOR ANGLE MIN. θ
12'-0"	2	43°	2	55°
13'-4"	2	50°	2	68°

VERTICAL TIE-DOWN / FRAME TIE-DOWN SPACING TABLE

MIN. FLOOR WIDTH	MAX. EAVE OVERHANG	WIND ZONE II			WIND ZONE III		
		SPACING	DBL. HEAD LOAD	ANCHOR ANGLE	SPACING	DBL. HEAD LOAD	ANCHOR ANGLE
12'-0"	6"	8'-0"	3150#	40°-50°	6'-8"	3150#	40°-50°
13'-4"	6"	8'-0"	3150#	40°-50°	6'-8"	3150#	40°-50°

EXPOSURE 'D'

LONGITUDINAL TIE-DOWN SPACING TABLE

MIN. FLOOR WIDTH	WIND ZONE II		WIND ZONE III	
	MIN. QTY. EA. END OF EA. SECTION	ANCHOR ANGLE MIN. θ	MIN. QTY. EA. END OF EA. SECTION	ANCHOR ANGLE MIN. θ
12'-0"	2	64°	3	47°
12'-0"	3	37°	4	33°
13'-4"	3	42°	3	55°
13'-4"	4	30°	4	38°

VERTICAL TIE-DOWN / FRAME TIE-DOWN SPACING TABLE

MIN. FLOOR WIDTH	MAX. EAVE OVERHANG	WIND ZONE II			WIND ZONE III		
		SPACING	DBL. HEAD LOAD	ANCHOR ANGLE	SPACING	DBL. HEAD LOAD	ANCHOR ANGLE
12'-0"	6"	5'-4"	3150#	40°-45°	4'-0"	3150#	40°-50°
13'-4"	6"	5'-4"	3150#	40°-50°	4'-0"	3150#	40°-50°

NOTES:

1. SEE AD-TD-0001 FOR ADDITIONAL REQUIREMENTS.
2. SEE AD-TD-0013 FOR MAXIMUM PIER HEIGHTS REQUIRED FOR THE LOADS TABULATED ABOVE.
3. MAX. EAVE OVERHANG REFERS TO OVERHANG AT SIDEWALL NOT FRONT OR REAR.
4. ABOVE TABLES APPLY TO 160" FLOOR OR 144" FLOOR WIDTHS WITH 95 1/2" I-BEAM SPACING, 96" MAXIMUM SIDEWALL HEIGHT AND 6" MAXIMUM SIDE OVERHANG (6" OVERHANG MAX. EACH SIDE OF UNIT).

ENGINEER APPROVAL: JOHN C. DOEDEN REGISTERED No. ENE8703571 STATE OF INDIANA PROFESSIONAL ENGINEER

DAPIA APPROVAL: APPROVED BY Rev JUN 1 5 1995 NTA INC. FEDERAL MANUFACTURED HOME CONSTRUCTION AND SAFETY STANDARDS

JACOBSEN HOMES
P.O. BOX 368
SAFETY HARBOR, FLORIDA 34695
PHONE (813) 726-1138

NOTICE:
THESE SPECIFICATIONS AND DRAWINGS ARE ORIGINAL, PROPRIETARY, AND CONFIDENTIAL MATERIALS OF JACOBSEN MANUFACTURING INC. SUCH MATERIALS ARE PROVIDED TO THE RECIPIENT FOR SPECIFIC PURPOSES AND MUST BE KEPT CONFIDENTIAL AND SECRET FROM OTHERS.

DRAWN: C.L.Y.	DATE: 5-30-95	REV. LETTER: A	
DRAWING TITLE: NORM. SPACING TABLES			
DRAWING NUMBER: AD-TD-0012			

ADDENDUM

TIE-DOWN SYSTEM

TYPICAL SIDE ELEVATION
SHOWING TIE-DOWN SPACINGS

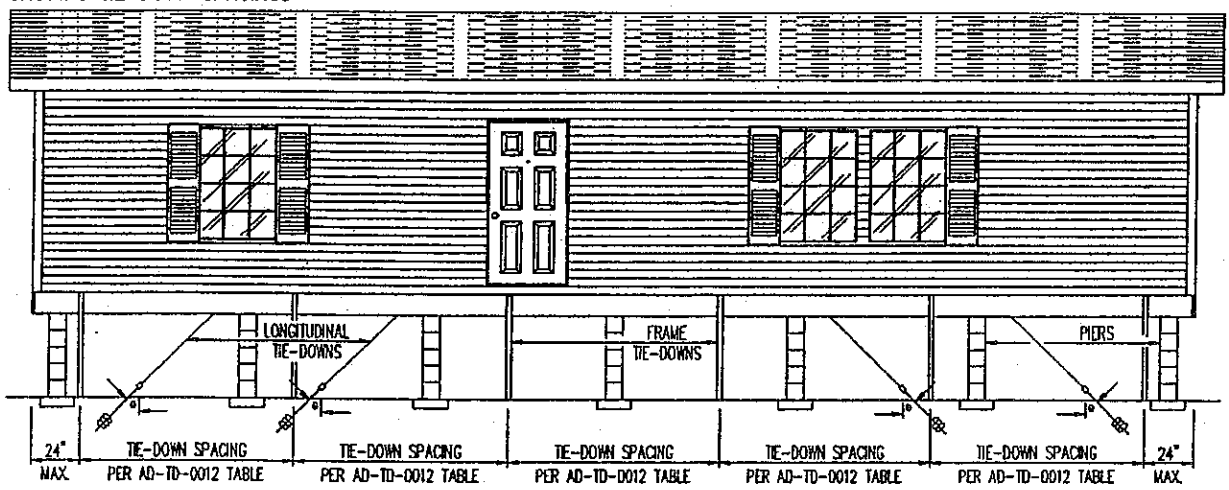

FIGURE 1.2

SEE FIGURE 2.0 FOR ALTERNATE TIE-DOWN METHOD

TYPICAL CROSS SECTION
SHOWING TIEDOWNS

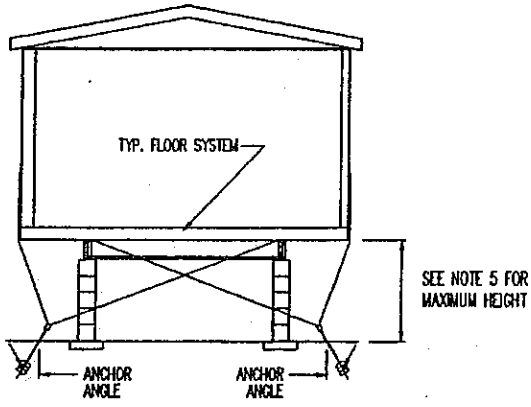

FIGURE 1.3

SEE FIGURE 7.0 FOR ALTERNATE TIE-DOWN METHOD

NOTES:

1. SEE AD-TD-0012 FOR SPACING TABLES AND NOTES.
2. SEE AD-TD-0012 FOR QUANITY OF LONGITUDIAL TIE-DOWN STRAPS REQUIRED.
3. SEE OTHER DETAILS FOR BLOCKING (PIER) QUANTITY AND OTHER REQUIREMENTS.
4. SEE AD-TD-0001 FOR ADDITIONAL REQUIREMENTS.
5. ZONE 2/EXPOSURE 'C': 30" MAXIMUM HEIGHT
   ZONE 2/EXPOSURE 'D': 48" MAXIMUM HEIGHT
   ZONE 3/EXPOSURE 'C': 28" MAXIMUM HEIGHT
   ZONE 3/EXPOSURE 'D': 60" MAXIMUM HEIGHT

ENGINEER APPROVAL:

JOHN C. DOEDEN
REGISTERED
No.
ENE8703571
STATE OF INDIANA
PROFESSIONAL ENGINEER

DAPIA APPROVAL:

APPROVED BY
JAN 1 1 2004
NTA INC.
FEDERAL MANUFACTURED HOME CONSTRUCTION AND SAFETY STANDARDS®

JACOBSEN HOMES
P.O. BOX 368
SAFETY HARBOR, FLORIDA 34695
PHONE (813) 726-1138

NOTICE:
THESE SPECIFICATIONS AND DRAWINGS ARE ORIGINAL, PROPRIETARY, AND CONFIDENTIAL MATERIALS OF JACOBSEN MANUFACTURING INC. SUCH MATERIALS ARE PROVIDED TO THE RECIPIENT FOR SPECIFIC PURPOSES AND MUST BE KEPT CONFIDENTIAL AND SECRET FROM OTHERS.

DRAWN BY:	DATE:	REV. LETTER:
C.L.Y.	5-19-95	A

DRAWING TITLE: FIGURES 1.2 AND 1.3

DRAWING NUMBER: AD-TD-0013

ADDENDUM

ALTERNATE TIE-DOWN SYSTEM

TYPICAL SIDE ELEVATION
SHOWING TIE-DOWN SPACINGS

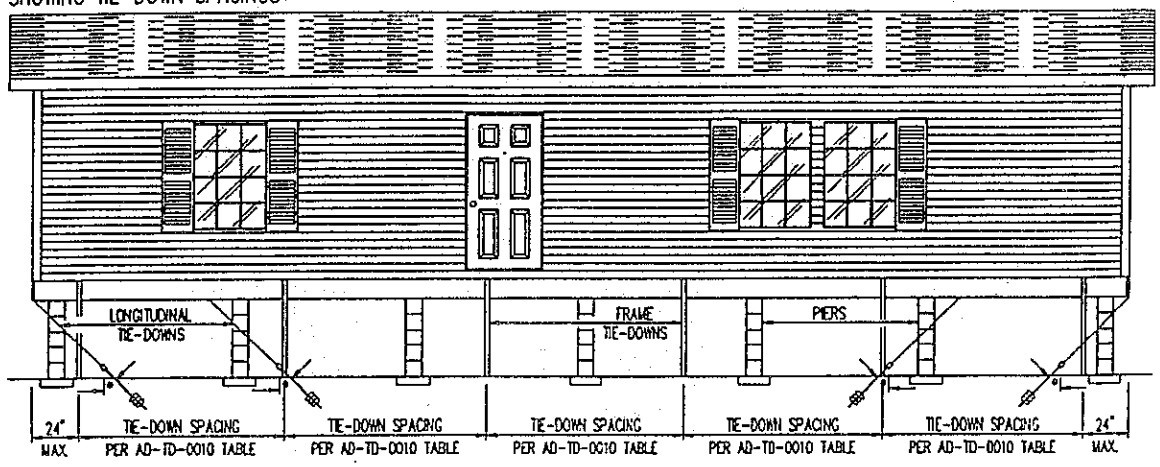

FIGURE 2.0

SEE FIGURES 1.1 AND 1.3 FOR TYP. CROSS-SECTION(S)

NOTES:

1. SEE AD-TD-0010 FOR SPACING TABLES.
2. SEE AD-TD-0010 FOR QUANITY OF LONGITUDIAL TIE-DOWN STRAPS REQUIRED.
3. SEE OTHER DETAILS FOR BLOCKING (PIER) QUANTITY AND OTHER REQUIREMENTS.
4. SEE AD-TD-0001 FOR ADDITIONAL REQUIREMENTS.

ENGINEER APPROVAL:
JOHN C. DOEDEN REGISTERED No. ENE8703571 STATE OF INDIANA PROFESSIONAL ENGINEER
6/4/95

DAPIA APPROVAL:
APPROVED BY per
JUN 15 1995
NTA INC.
FEDERAL MANUFACTURED HOME CONSTRUCTION AND SAFETY STANDARDS

JACOBSEN HOMES
P.O. BOX 368
SAFETY HARBOR, FLORIDA 34695
PHONE (813) 726-1138

NOTICE:
THESE SPECIFICATIONS AND DRAWINGS ARE ORIGINAL, PROPRIETARY, AND CONFIDENTIAL MATERIALS OF JACOBSEN MANUFACTURING INC. SUCH MATERIALS ARE PROVIDED TO THE RECIPIENT FOR SPECIFIC PURPOSES AND MUST BE KEPT CONFIDENTIAL AND SECRET FROM OTHERS.

DRAWN BY: C.L.Y.	DATE: 5-19-95	REV. LETTER: A
DRAWING TITLE: FIGURE 2.0		
DRAWING NUMBER: AD-TD-0014		

ADDENDUM

ALTERNATE TIE-DOWN SYSTEM(S)

ALTERNATE LONGITUDINAL TIE-DOWN INSTALLATION METHODS

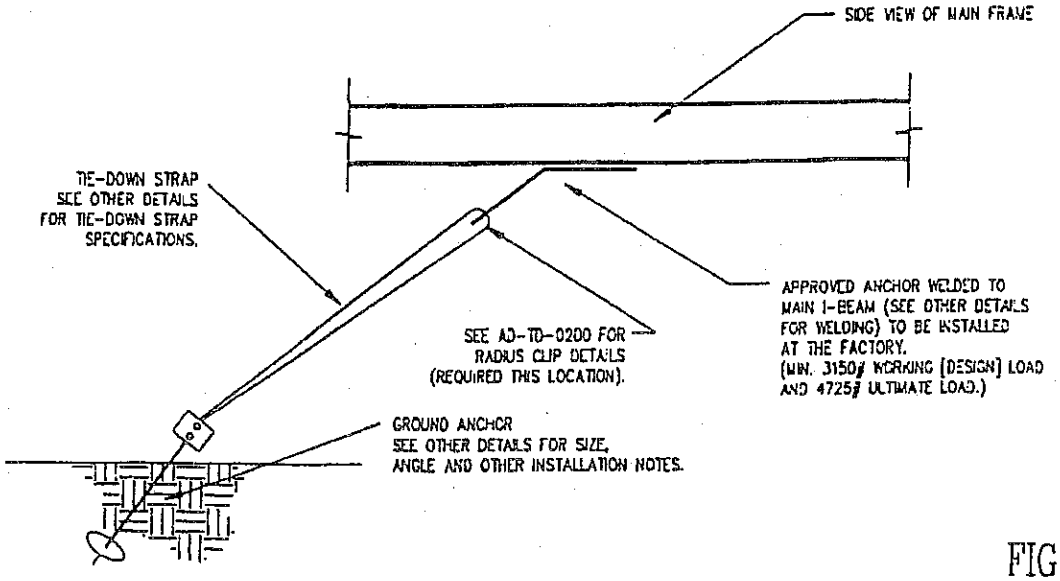

FIGURE 2.1

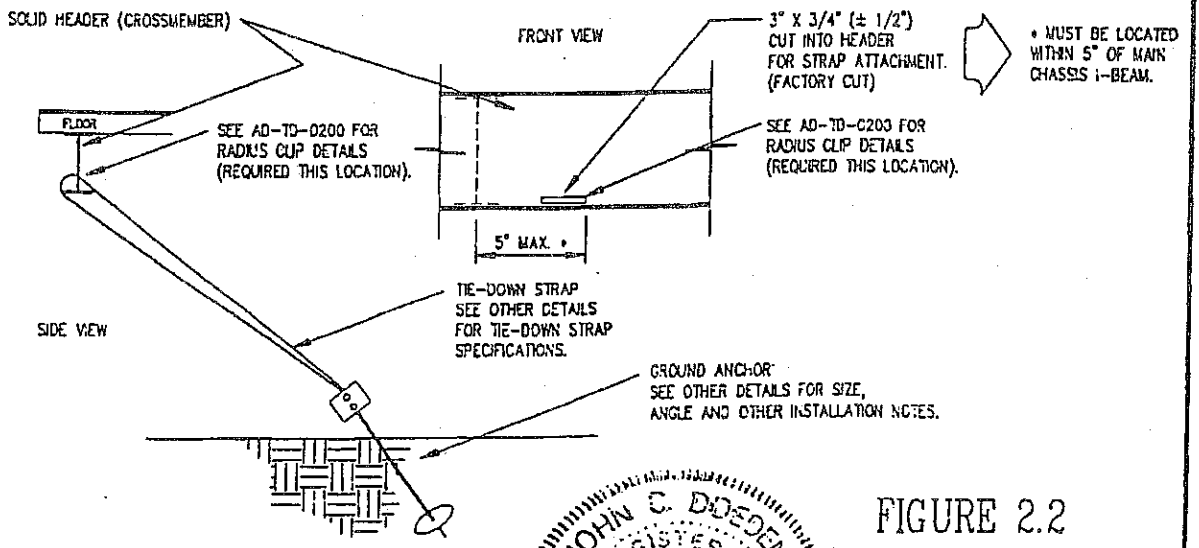

FIGURE 2.2

NOTES:

1. SEE AD-TD-0010 FOR SPACING TABLES.
2. SEE AD-TD-0010 FOR QUANITY OF LONGITUDIAL TIE-DOWN STRAPS REQUIRED.
3. SEE OTHER DETAILS FOR BLOCKING (PIER) QUANTITY AND OTHER REQUIREMENTS.
4. SEE AD-TD-0001 FOR ADDITIONAL REQUIREMENTS.

ENGINEER APPROVAL: JOHN C. DOEDEN REGISTERED ENGINEER STATE OF FLORIDA PROFESSIONAL 6/20/95

DAPIA APPROVAL:

ANCHOR BRACKET AND TIE-DOWN DEVICES ARE CERTIFIED BY OTHERS

JACOBSEN HOMES

P.O. BOX 368
SAFETY HARBOR, FLORIDA 34695
PHONE (813) 726-1138

NOTICE:
THESE SPECIFICATIONS AND DRAWINGS ARE ORIGINAL, PROPRIETARY, AND CONFIDENTIAL MATERIALS OF JACOBSEN MANUFACTURING INC. SUCH MATERIALS ARE PROVIDED TO THE RECIPIENT FOR SPECIFIC PURPOSES AND MUST BE KEPT CONFIDENTIAL AND SECRET FROM OTHERS.

DRAWN BY.	DATE.	REV. LETTER:
C.L.Y.	6-13-95	
DRAWING TITLE: FIGURES 2.1 & 2.2		
DRAWING NUMBER: AD-TD-0015		

LONGITUDINAL STRAP ATTACHMENT

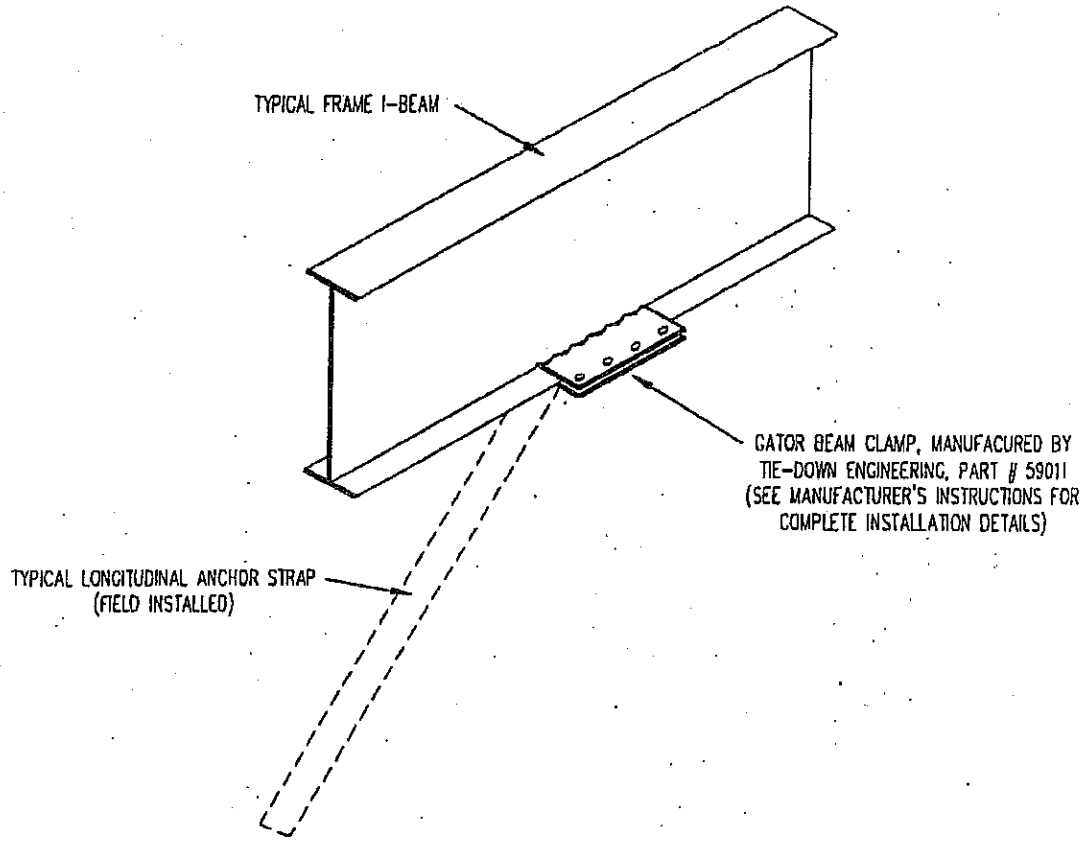

NOTES:

1. SEE OTHER DETAILS FOR STRAP PROTECTION AT ALL SHARP CORNERS
2. ALL STRAPS TO BE TYPE 1, FINISH B, GRADE 1 STEEL STRAPPING, 1 1/4" WIDE AND 0.035 INCHES IN THICKNESS, CERTIFIED BY A REGISTERED PROFESSIONAL ENGINEER OR ARCHITECT AS CONFORMING WITH ASTM STANDARD SPECIFICATION D 3953-91, STANDARD SPECIFICATION FOR STRAPPING, FLAT STEEL, AND SEALS.

DAPIA APPROVAL:

APPROVED BY NIA INC. JUN 15 2001

FEDERAL MANUFACTURED HOME CONSTRUCTION AND SAFETY STANDARDS

JACOBSEN HOMES
P.O. BOX 368
SAFETY HARBOR, FLORIDA 34695
PHONE (727) 726-1138

NOTICE:
THESE SPECIFICATIONS AND DRAWINGS ARE ORIGINAL, PROPRIETARY, AND CONFIDENTIAL MATERIALS OF JACOBSEN MANUFACTURING INC. SUCH MATERIALS ARE PROVIDED TO THE RECIPIENT FOR SPECIFIC PURPOSES AND MUST BE KEPT CONFIDENTIAL AND SECRET FROM OTHERS.

DRAWN BY: M.T.	DATE: 6-12-01	REV. LETTER: —
DRAWING TITLE: LONGITUDINAL STRAP ATTACHMENT		
DRAWING NUMBER: AD-TD-0016		

ADDENDUM

OFFSET UNIT TIE-DOWN SPACING TABLES
ZONE II & III/EXP. C & D

SEE FIGURES 3.0, 3.1 & 3.2

EXPOSURE 'C'

LONGITUDINAL TIE-DOWN SPACING TABLE

MIN. FLOOR WIDTH	WIND ZONE II		WIND ZONE III	
	MIN. QTY. EA. END OF EA. SECTION	ANCHOR ANGLE MIN. θ	MIN. QTY. EA. END OF EA. SECTION	ANCHOR ANGLE MIN. θ
10'-0"	2	44°	2	56°
12'-0"	2	57°	3	42°
13'-4"	3	38°	3	50°

VERTICAL TIE-DOWN / FRAME TIE-DOWN SPACING TABLE

MIN. FLOOR WIDTH	MAX. EAVE OVERHANG	WIND ZONE II			WIND ZONE III		
		SPACING	DBL. HEAD LOAD	ANCHOR ANGLE	SPACING	DBL. HEAD LOAD	ANCHOR ANGLE
10'-0"	12"	4'-0"	3150#	40°-50°	4'-0"	3150#	40°-50°
12'-0"	12"	4'-0"	3000#	40°-50°	4'-0"	3150#	40°-50°
13'-4"	12"	5'-3"	3150#	40°-50°	4'-0"	3000#	40°-50°

EXPOSURE 'D'

LONGITUDINAL TIE-DOWN SPACING TABLE

MIN. FLOOR WIDTH	WIND ZONE II		WIND ZONE III	
	MIN. QTY. EA. END OF EA. SECTION	ANCHOR ANGLE MIN. θ	MIN. QTY. EA. END OF EA. SECTION	ANCHOR ANGLE MIN. θ
10'-0"	2	64°	3	46°
12'-0"	3	50°	3	68°
13'-4"	3	58°	4	48°

VERTICAL TIE-DOWN / FRAME TIE-DOWN SPACING TABLE

MIN. FLOOR WIDTH	MAX. EAVE OVERHANG	WIND ZONE II			WIND ZONE III		
		SPACING	DBL. HEAD LOAD	ANCHOR ANGLE	SPACING	DBL. HEAD LOAD	ANCHOR ANGLE
10'-0"	12"	4'-0"	3150#	40°-50°	2'-8"	3150#	40°-50°
12'-0"	12"	4'-0"	3100#	40°-50°	2'-8"	3150#	40°-50°
13'-4"	12"	4'-0"	3065#	40°-50°	2'-8"	3000#	40°-50°

NOTES:

1. OFFSET SECTION WITH THE MARRIAGE LINE WALL EXTENDING BEYOND THE ENDWALL OF THE ADJACENT SECTION MUST BE TIED DOWN AT THE MARRIAGE LINE IN ACCORDANCE WITH THE TABLES ABOVE. THE SIDEWALL SIDE AND THE ADJACENT SECTION(S) ARE TO BE TIED DOWN IN ACCORDANCE WITH THE NORMAL SPACING TABLES (AD-TD-0010).
2. SEE AD-TD-0001 FOR ADDITIONAL REQUIREMENTS.
3. SEE AD-TD-0021 FOR MAXIMUM PIER HEIGHT REQUIRED FOR THE LOADS TABULATED ABOVE.

ENGINEER APPROVAL: JOHN C. DOEDEN REGISTERED ENGINEER 9/4/96 INDIANA PROFESSIONAL ENGINEER

DAPIA APPROVAL: APPROVED BY REVISED SEP 0 9 1996 NTA INC. FEDERAL MANUFACTURED HOME CONSTRUCTION AND SAFETY STANDARDS.

JACOBSEN HOMES
P.O. BOX 368
SAFETY HARBOR, FLORIDA 34695
PHONE (813) 726-1138

NOTICE:
THESE SPECIFICATIONS AND DRAWINGS ARE ORIGINAL, PROPRIETARY, AND CONFIDENTIAL MATERIALS OF JACOBSEN MANUFACTURING INC. SUCH MATERIALS ARE PROVIDED TO THE RECIPIENT FOR SPECIFIC PURPOSES AND MUST BE KEPT CONFIDENTIAL AND SECRET FROM OTHERS.

DRAWN BY: R.R.	DATE: 8-27-96	REV. LETTER: B
DRAWING TITLE: OFFSET SPACING TABLES		
DRAWING NUMBER: AD-TD-0020		

ADDENDUM

OFFSET UNIT TIE-DOWN SYSTEM

TYPICAL SIDE ELEVATION (W/ OFFSET SECTION)
SHOWING TIE-DOWN SPACINGS

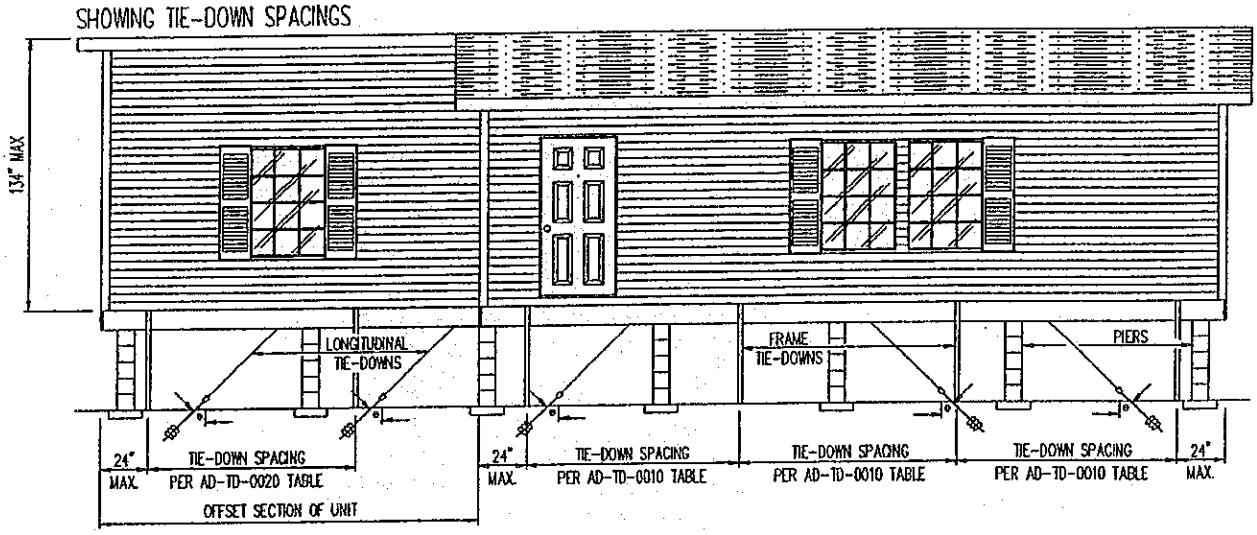

FIGURE 3.0

SEE FIGURE 4.0 FOR ALTERNATE TIE-DOWN METHOD

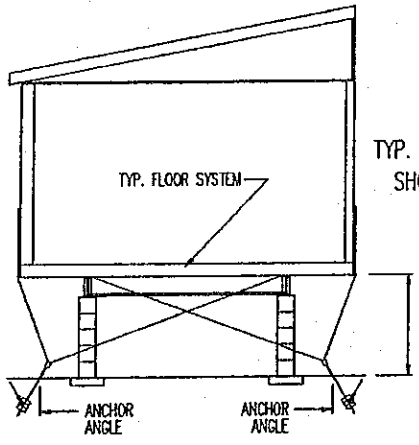

TYP. CROSS SECTION(S) SHOWING TIEDOWNS

SEE NOTE 5 FOR MAXIMUM HEIGHT

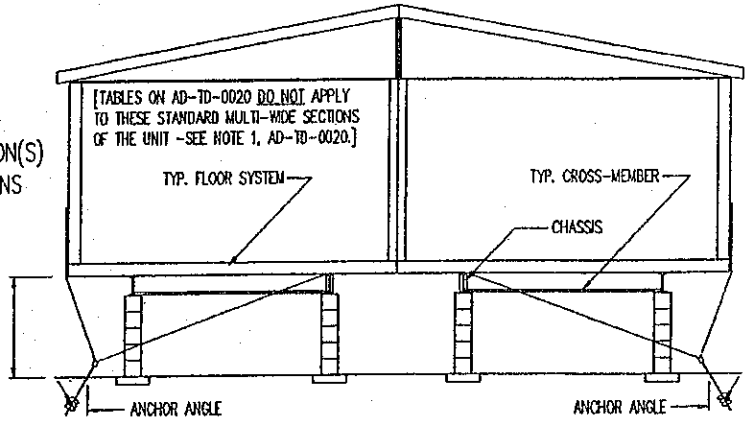

FIGURE 3.1

SEE FIGURE 6.0 FOR ALTERNATE TIE-DOWN METHOD

FIGURE 3.2

SEE FIGURE 6.1 FOR ALTERNATE TIE-DOWN METHOD

NOTES:

1. SEE AD-TD-0020 FOR SPACING TABLES (OFFSET SECTION ONLY).
2. SEE AD-TD-0020 FOR QUANITY OF LONGITUDIAL TIE-DOWN STRAPS REQUIRED. (OFFSET SECTION ONLY)
3. SEE OTHER DETAILS FOR BLOCKING (PIER) QUANTITY AND OTHER REQUIREMENTS.
4. SEE AD-TD-0001 FOR ADDITIONAL REQUIREMENTS.
5. ZONE 2/EXPOSURE 'C': 44" MAXIMUM HEIGHT
   ZONE 2/EXPOSURE 'D': 24" MAXIMUM HEIGHT (32" @ 24' WIDE MIN.)
   ZONE 3/EXPOSURE 'C': 32" MAXIMUM HEIGHT
   ZONE 3/EXPOSURE 'D': 32" MAXIMUM HEIGHT (44" @ 24' WIDE MIN.)

ENGINEER APPROVAL:

JOHN C. DOEDEN REGISTERED No. ENE8703571 STATE OF INDIANA PROFESSIONAL ENGINEER 6/4/95

DAPIA APPROVAL:

APPROVED BY Rev JAN 15 20

NTA INC. FEDERAL MANUFACTURED HOME CONSTRUCTION AND SAFETY STANDARDS

JACOBSEN HOMES

P.O. BOX 368
SAFETY HARBOR, FLORIDA 34695
PHONE (813) 726-1138

NOTICE:
THESE SPECIFICATIONS AND DRAWINGS ARE ORIGINAL, PROPRIETARY, AND CONFIDENTIAL MATERIALS OF JACOBSEN MANUFACTURING INC. SUCH MATERIALS ARE PROVIDED TO THE RECIPIENT FOR SPECIFIC PURPOSES AND MUST BE KEPT CONFIDENTIAL AND SECRET FROM OTHERS.

DRAWN BY: C.L.Y.	DATE: 5-11-95	REV. LETTER: A
DRAWING TITLE: FIG. 3.0, 3.1 & 3.2		
DRAWING NUMBER: AD-TD-0021		

ADDENDUM

ALTERNATE OFFSET UNIT TIE-DOWN SYSTEM

TYPICAL SIDE ELEVATION (W/ OFFSET SECTION)
SHOWING TIE-DOWN SPACINGS

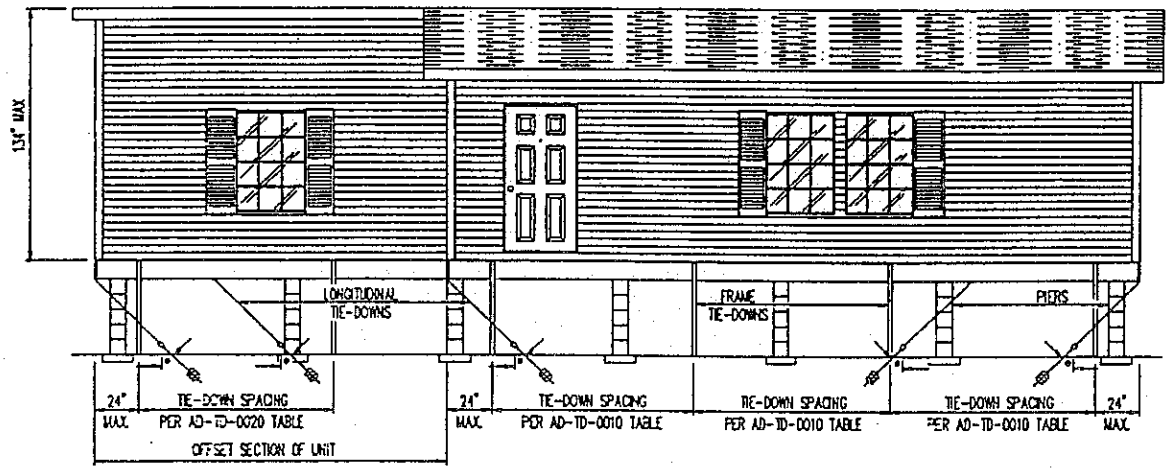

FIGURE 4.0

SEE FIGURES 3.1 AND 3.2 FOR TYP. CROSS-SECTION

NOTES:

1. SEE AD-TD-0020 FOR SPACING TABLES (OFFSET SECTION ONLY).
2. SEE AD-TD-0020 FOR QUANITY OF LONGITUDIAL TIE-DOWN STRAPS REQUIRED. (OFFSET SECTION ONLY)
3. SEE OTHER DETAILS FOR BLOCKING (PIER) QUANTITY AND OTHER REQUIREMENTS.
4. SEE AD-TD-0001 FOR ADDITIONAL REQUIREMENTS.

ENGINEER APPROVAL:
JOHN C. JOEDEN REGISTERED No. ENE8703571 STATE OF INDIANA PROFESSIONAL ENGINEER
6/9/95

DAPIA APPROVAL:
APPROVED BY
NTA INC.
JUN 1 5 1995
FEDERAL MANUFACTURED HOME CONSTRUCTION AND SAFETY STANDARDS

JACOBSEN HOMES
P.O. BOX 368
SAFETY HARBOR, FLORIDA 34695
PHONE (813) 726-1138

NOTICE:
THESE SPECIFICATIONS AND DRAWINGS ARE ORIGINAL, PROPRIETARY, AND CONFIDENTIAL MATERIALS OF JACOBSEN MANUFACTURING INC. SUCH MATERIALS ARE PROVIDED TO THE RECIPIENT FOR SPECIFIC PURPOSES AND MUST BE KEPT CONFIDENTIAL AND SECRET FROM OTHERS.

DRAWN BY: C.L.Y.	DATE: 5-11-95	REV. LETTER: A
DRAWING TITLE: FIG. 4.0		
DRAWING NUMBER: AD-TD-0022		

4000# ANCHORS REQ'D

ADDENDUM

SEE FIGURE 5.0

ALTERNATE UNIT TIE-DOWN SPACING TABLES
ZONE II & III/EXP. C & D

EXPOSURE 'C'

LONGITUDINAL TIE-DOWN SPACING TABLE

MIN. FLOOR WIDTH	WIND ZONE II		WIND ZONE III	
	MIN. QTY. EA. END OF EA. SECTION	ANCHOR ANGLE MIN. θ	MIN. QTY. EA. END OF EA. SECTION	ANCHOR ANGLE MIN. θ
20'-0"	2	36°	2	45°
24'-0"	2	46°	2	60°
25'-4"	2	50°	2	67°
26'-8"	2	55°	3	30°

VERTICAL TIE-DOWN / FRAME TIE-DOWN SPACING TABLE

MIN. FLOOR WIDTH	MAX. EAVE OVERHANG	WIND ZONE II			WIND ZONE III		
		SPACING	DBL. HEAD LOAD	ANCHOR ANGLE	SPACING	DBL. HEAD LOAD	ANCHOR ANGLE
20'-0"	12"	4'-0"	3670#	20°	4'-0"	3900#	20°
24'-0"	12"	4'-0"	3700#	20°	4'-0"	3950#	20°
25'-4"	12"	6'-8"	4000#	15°	4'-0"	3950#	22°
26'-8"	12"	6'-8"	3950#	28°	4'-0"	3950#	22°

EXPOSURE 'D'

LONGITUDINAL TIE-DOWN SPACING TABLE

MIN. FLOOR WIDTH	WIND ZONE II		WIND ZONE III	
	MIN. QTY. EA. END OF EA. SECTION	ANCHOR ANGLE MIN. θ	MIN. QTY. EA. END OF EA. SECTION	ANCHOR ANGLE MIN. θ
20'-0"	2	50°	N/A	N/A
24'-0"	2	70°	N/A	N/A
25'-4"	3	42°	N/A	N/A
26'-8"	N/A	N/A	N/A	N/A

VERTICAL TIE-DOWN / FRAME TIE-DOWN SPACING TABLE

MIN. FLOOR WIDTH	MAX. EAVE OVERHANG	WIND ZONE II			WIND ZONE III		
		SPACING	DBL. HEAD LOAD	ANCHOR ANGLE	SPACING	DBL. HEAD LOAD	ANCHOR ANGLE
20'-0"	12"	4'-0"	4000#	20°	N/A	N/A	N/A
24'-0"	12"	4'-0"	4000#	24°	N/A	N/A	N/A
25'-4"	12"	4'-0"	4000#	26°	N/A	N/A	N/A
26'-8"	12"	4'-0"	4000#	27°	N/A	N/A	N/A

NOTES:

1. SEE AD-TD-0001 FOR ADDITIONAL REQUIREMENTS.
2. SEE AD-TD-0031 FOR MAXIMUM PIER HEIGHT REQUIRED FOR THE LOADS TABULATED ABOVE.
3. 20 WIDES ~82" MAXIMUM I-BEAM SPACING ONLY.
4. 4" MAXIMUM INSET TO ANCHOR HEADS (SEE AD-TD-0031).

ENGINEER APPROVAL: JOHN C. DOEDEN REGISTERED No. ENE8703571 6/24/95 INDIANA PROFESSIONAL ENGINEER

DAPIA APPROVAL:

JACOBSEN HOMES
P.O. BOX 368
SAFETY HARBOR, FLORIDA 34695
PHONE (813) 726-1138

NOTICE:
THESE SPECIFICATIONS AND DRAWINGS ARE ORIGINAL, PROPRIETARY, AND CONFIDENTIAL MATERIALS OF JACOBSEN MANUFACTURING INC. SUCH MATERIALS ARE PROVIDED TO THE RECIPIENT FOR SPECIFIC PURPOSES AND MUST BE KEPT CONFIDENTIAL AND SECRET FROM OTHERS.

DRAWN BY: C.L.Y.	DATE: 6-13-95	REV. LETTER:
DRAWING TITLE: ALT. SPACING TABLES		
DRAWING NUMBER: AD-TD-0030		

ADDENDUM

4000# ANCHORS REQ'D

ALTERNATE TIE-DOWN SYSTEM(S)

TYPICAL CROSS SECTION SHOWING TIEDOWNS

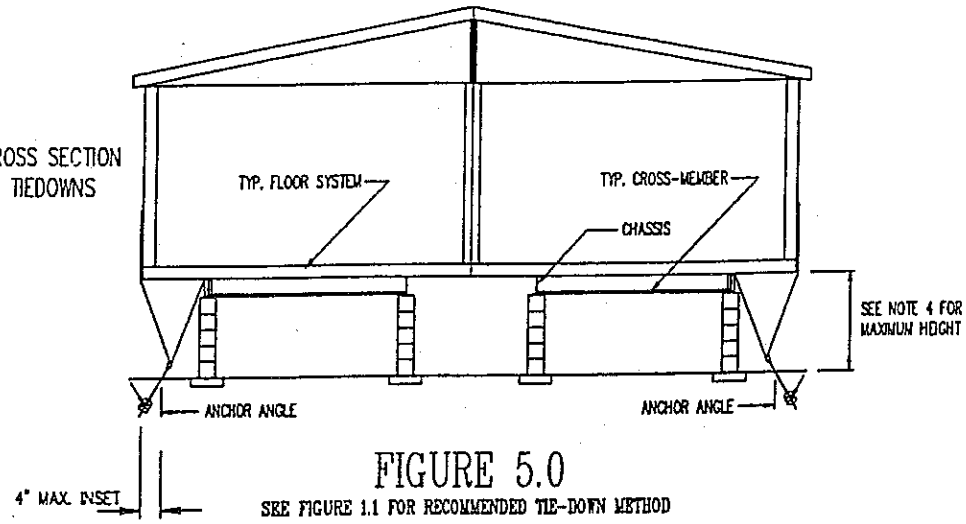

FIGURE 5.0

SEE FIGURE 1.1 FOR RECOMMENDED TIE-DOWN METHOD

IMPORTANT NOTICE:

THIS ALTERNATE APPLICATION REQUIRES 4,000 POUND ANCHORS

WHEN USING THIS TIE-DOWN CONFIGURATION A STYLE CREST PRODUCTS MODEL 57SH (TYPE 2), AUGER ANCHOR WITH A DESIGN LOAD (WORKING LOAD) RATING OF 4,000 POUNDS AND AN ULTIMATE LOAD RATING OF 6,000 POUNDS MUST BE USED. AN EQUIVILANT ANCHOR MEETING THE ABOVE SPECIFICATIONS MADE BY ANOTHER MANUFACTURER MAY BE USED IN LIEU OF THE STYLE CREST PRODUCTS ANCHOR.

NOTES:

1. SEE AD-TD-0001 FOR ADDITIONAL REQUIREMENTS.
2. SEE OTHER DETAILS FOR BLOCKING (PIER) QUANTITY AND OTHER REQUIREMENTS.
3. FOR FIGURE 5.0 SEE ALTERNATE TIE-DOWN SPACING TABLES (AD-TD-0030).
4. ZONE 2/EXPOSURE 'C': 32" MAXIMUM HEIGHT
   ZONE 2/EXPOSURE 'D': 27" MAXIMUM HEIGHT
   ZONE 3/EXPOSURE 'C': 30" MAXIMUM HEIGHT
   ZONE 3/EXPOSURE 'D': THIS APPLICATION IS NOT APPLICABLE.

THE ALTERNATE TIE-DOWN METHODS SHOWN ABOVE ARE ACCEPTABLE FOR USE IN ALL WIND ZONES AND IN BOTH EXPOSURE 'C' AND EXPOSURE 'D', HOWEVER, BY INSTALLING THE FRAME TIE-DOWN STRAPS AT THE 'OUTBOARD' I-BEAM THE MAX. HEIGHT OFF THE GROUND IS GREATLY REDUCED. SEE OTHER DETAILS FOR THE RECOMMENDED METHODS FOR INSTALLING FRAME TIE-DOWNS.

ENGINEER APPROVAL:

JOHN C. DOEJEN
REGISTERED
No.
ENES703571
STATE OF INDIANA
PROFESSIONAL ENGINEER
6/24/95

DAPIA APPROVAL:

NFPA INC.

JACOBSEN HOMES

P.O. BOX 368
SAFETY HARBOR, FLORIDA 34695
PHONE (813) 726-1138

NOTICE:
THESE SPECIFICATIONS AND DRAWINGS ARE ORIGINAL, PROPRIETARY, AND CONFIDENTIAL MATERIALS OF JACOBSEN MANUFACTURING INC. SUCH MATERIALS ARE PROVIDED TO THE RECIPIENT FOR SPECIFIC PURPOSES AND MUST BE KEPT CONFIDENTIAL AND SECRET FROM OTHERS.

DRAWN BY: C.L.Y.	DATE: 6-13-95	REV. LETTER:
DRAWING TITLE: FIG. 5.0		
DRAWING NUMBER: AD-TD-0031		

THIS ALT. APPLICATION IS NOT APPLICABLE FOR 120" FLOOR WIDTHS - SEE NORMAL TIE-DOWN CONFIGURATIONS.

4000# ANCHORS REQ'D

ADDENDUM

ALT. OFFSET UNIT TIE-DOWN SPACING TABLES
ZONE II & III/EXP. C & D

SEE FIGURES 6.0 & 6.1

EXPOSURE 'C'

LONGITUDINAL TIE-DOWN SPACING TABLE

MIN. FLOOR WIDTH	WIND ZONE II		WIND ZONE III	
	MIN. QTY. EA. END OF EA. SECTION	ANCHOR ANGLE MIN. θ	MIN. QTY. EA. END OF EA. SECTION	ANCHOR ANGLE MIN. θ
20'-0"	N/A	N/A	N/A	N/A
24'-0"	2	42°	2	53°
25'-4"	2	45°	2	58°
26'-8"	2	48°	3	37°

VERTICAL TIE-DOWN / FRAME TIE-DOWN SPACING TABLE

MIN. FLOOR WIDTH	MAX. EAVE OVERHANG	WIND ZONE II			WIND ZONE III		
		SPACING	DBL. HEAD LOAD	ANCHOR ANGLE	SPACING	DBL. HEAD LOAD	ANCHOR ANGLE
20'-0"	12"	N/A	N/A	N/A	N/A	N/A	N/A
24'-0"	12"	4'-0"	4000#	20°-30°	4'-0"	4000#	20°-30°
25'-4"	12"	4'-0"	4000#	20°-30°	4'-0"	4000#	20°-30°
26'-8"	12"	4'-0"	4000#	20°-30°	4'-0"	4000#	25°-30°

EXPOSURE 'D'

LONGITUDINAL TIE-DOWN SPACING TABLE

MIN. FLOOR WIDTH	WIND ZONE II		WIND ZONE III	
	MIN. QTY. EA. END OF EA. SECTION	ANCHOR ANGLE MIN. θ	MIN. QTY. EA. END OF EA. SECTION	ANCHOR ANGLE MIN. θ
20'-0"	N/A	N/A	N/A	N/A
24'-0"	2	60°	3	45°
25'-4"	2	66°	3	48°
26'-8"	3	41°	3	52°

VERTICAL TIE-DOWN / FRAME TIE-DOWN SPACING TABLE

MIN. FLOOR WIDTH	MAX. EAVE OVERHANG	WIND ZONE II			WIND ZONE III		
		SPACING	DBL. HEAD LOAD	ANCHOR ANGLE	SPACING	DBL. HEAD LOAD	ANCHOR ANGLE
20'-0"	12"	N/A	N/A	N/A	N/A	N/A	N/A
24'-0"	12"	3'-8"	4000#	20°-30°	2'-8"	4000#	20°-30°
25'-4"	12"	4'-0"	4000#	25°-30°	3'-2"	4000#	25°-30°
26'-8"	12"	4'-0"	4000#	25°-30°	3'-2"	4000#	25°-30°

NOTES:

1. OFFSET SECTION WITH THE MARRIAGE LINE WALL EXTENDING BEYOND THE ENDWALL OF THE ADJACENT SECTION MUST BE TIED DOWN AT THE MARRIAGE LINE IN ACCORDANCE WITH THE TABLES ABOVE. THE SIDEWALL SIDE AND THE ADJACENT SECTION(S) ARE TO BE TIED DOWN IN ACCORDANCE WITH THE ALT. SPACING TABLES (AD-TD-0030).
2. SEE AD-TD-0001 FOR ADDITIONAL REQUIREMENTS.
3. SEE AD-TD-0033 FOR MAXIMUM PIER HEIGHT REQUIRED FOR THE LOADS TABULATED ABOVE.

ENGINEER APPROVAL: JOHN C. DOEDEN REGISTERED No. ENG8703571 STATE OF INDIANA PROFESSIONAL ENGINEER 6/4/95

DAPIA APPROVAL: APPROVED BY NTA INC. JUN 1 5 1995

JACOBSEN HOMES
P.O. BOX 368
SAFETY HARBOR, FLORIDA 34695
PHONE (813) 726-1138

NOTICE: THESE SPECIFICATIONS AND DRAWINGS ARE ORIGINAL, PROPRIETARY, AND CONFIDENTIAL MATERIALS OF JACOBSEN MANUFACTURING INC. SUCH MATERIALS ARE PROVIDED TO THE RECIPIENT FOR SPECIFIC PURPOSES AND MUST BE KEPT CONFIDENTIAL AND SECRET FROM OTHERS.

DRAWN BY: C.L.Y.	DATE: 5-30-95	REV. LETTER:	
DRAWING TITLE: ALT. SPACING TABLES			
DRAWING NUMBER: AD-TD-0032			

THIS ALT. APPLICATION IS NOT APPLICABLE FOR 120" FLOOR WIDTHS - SEE NORMAL TIE-DOWN CONFIGURATIONS

4000# ANCHORS REQ'D

ADDENDUM

ALTERNATE TIE-DOWN SYSTEM

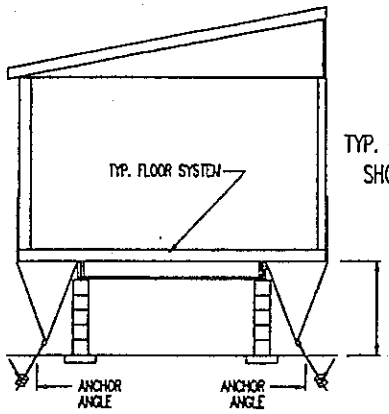

TYP. CROSS SECTION(S) SHOWING TIEDOWNS

SEE NOTE 5 FOR MAXIMUM HEIGHT

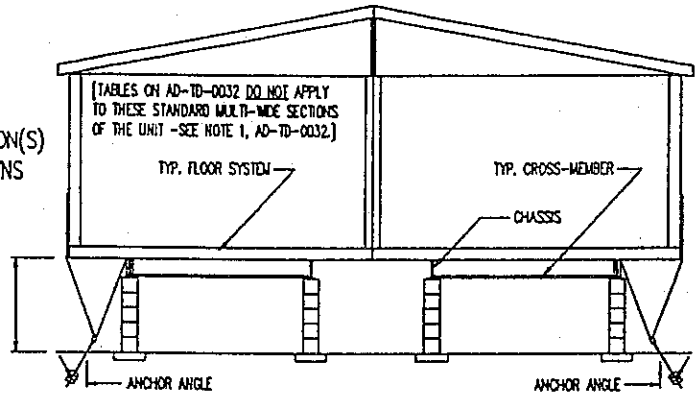

FIGURE 6.0

SEE FIGURE 3.1 FOR RECOMMENDED TIE-DOWN METHOD

FIGURE 6.1

SEE FIGURE 3.2 FOR RECOMMENDED TIE-DOWN METHOD

IMPORTANT NOTICE:

THIS ALTERNATE APPLICATION REQUIRES 4,000 POUND ANCHORS

WHEN USING THIS TIE-DOWN CONFIGURATION A STYLE CREST PRODUCTS MODEL 57SH (TYPE 2), AUGER ANCHOR WITH A DESIGN LOAD (WORKING LOAD) RATING OF 4,000 POUNDS AND AN ULTIMATE LOAD RATING OF 6,000 POUNDS MUST BE USED. AN EQUIVILANT ANCHOR MEETING THE ABOVE SPECIFICATIONS MADE BY ANOTHER MANUFACTURER MAY BE USED IN LIEU OF THE STYLE CREST PRODUCTS ANCHOR.

NOTES:

1. SEE AD-TD-0001 FOR ADDITIONAL REQUIREMENTS.
2. SEE OTHER DETAILS FOR BLOCKING (PIER) QUANTITY AND OTHER REQUIREMENTS.
3. FOR FIGURE 6.0 SEE OFFSET UNIT TIE-DOWN SPACING TABLES (AD-TD-0020).
4. FOR FIGURE 6.1 SEE NORMAL TIE-DOWN SPACING TABLES (AD-TD-0010). (ALSO SEE AD-TD-0020 AND AD-TD-0021)
5. ZONE 2/EXPOSURE 'C': 32" MAXIMUM HEIGHT
   ZONE 2/EXPOSURE 'D': 24" MAXIMUM HEIGHT
   ZONE 3/EXPOSURE 'C': 24" MAXIMUM HEIGHT
   ZONE 3/EXPOSURE 'D': 28" MAXIMUM HEIGHT

THE ALTERNATE TIE-DOWN METHODS SHOWN ABOVE ARE ACCEPTABLE FOR USE IN ALL WIND ZONES AND IN BOTH EXPOSURE 'C' AND EXPOSURE 'D', HOWEVER, BY INSTALLING THE FRAME TIE-DOWN STRAPS AT THE 'OUTBOARD' I-BEAM THE MAX. HEIGHT OFF THE GROUND IS GREATLY REDUCED. SEE OTHER DETAILS FOR THE RECOMMENDED METHODS FOR INSTALLING FRAME TIE-DOWNS.

ENGINEER APPROVAL:

JOHN C. DOEDEN REGISTERED No. ENE8703571 STATE OF INDIANA PROFESSIONAL ENGINEER 6/4/95

DAPIA APPROVAL:

APPROVED BY NTA INC. JUN 15 1995

JACOBSEN HOMES

P.O. BOX 368
SAFETY HARBOR, FLORIDA 34695
PHONE (813) 726-1138

NOTICE:
THESE SPECIFICATIONS AND DRAWINGS ARE ORIGINAL, PROPRIETARY, AND CONFIDENTIAL MATERIALS OF JACOBSEN MANUFACTURING INC. SUCH MATERIALS ARE PROVIDED TO THE RECIPIENT FOR SPECIFIC PURPOSES AND MUST BE KEPT CONFIDENTIAL AND SECRET FROM OTHERS.

DRAWN BY: C.L.Y.	DATE: 5-30-95	REV. LETTER:
DRAWING TITLE: FIG. 6.0 & 6.1		
DRAWING NUMBER: AD-TD-0033		

4000# ANCHORS REQ'D

ADDENDUM

SEE FIGURE 7.0

ALTERNATE TIE-DOWN SPACING TABLES
ZONE II & III/EXP. C & D

EXPOSURE 'C'

LONGITUDINAL TIE-DOWN SPACING TABLE

MIN. FLOOR WIDTH	WIND ZONE II		WIND ZONE III	
	MIN. QTY. EA. END OF EA. SECTION	ANCHOR ANGLE MIN. θ	MIN. QTY. EA. END OF EA. SECTION	ANCHOR ANGLE MIN. θ
12'-0"	2	43°	2	55°
13'-4"	2	50°	2	68°

VERTICAL TIE-DOWN / FRAME TIE-DOWN SPACING TABLE

MIN. FLOOR WIDTH	MAX. EAVE OVERHANG	WIND ZONE II			WIND ZONE III		
		SPACING	DBL. HEAD LOAD	ANCHOR ANGLE	SPACING	DBL. HEAD LOAD	ANCHOR ANGLE
12'-0"	6"	4'-0"	3750#	20°	4'-0"	3900#	22°
13'-4"	6"	5'-4"	3850#	25°	5'-4"	3960#	30°

THIS ALTERNATE APPLICATION REQUIRES 4,000 POUND ANCHORS

EXPOSURE 'D'

LONGITUDINAL TIE-DOWN SPACING TABLE

MIN. FLOOR WIDTH	WIND ZONE II		WIND ZONE III	
	MIN. QTY. EA. END OF EA. SECTION	ANCHOR ANGLE MIN. θ	MIN. QTY. EA. END OF EA. SECTION	ANCHOR ANGLE MIN. θ
12'-0"	2	64°	3	47°
12'-0"	3	37°	4	33°
13'-4"	3	42°	3	55°
13'-4"	4	30°	4	38°

VERTICAL TIE-DOWN / FRAME TIE-DOWN SPACING TABLE

MIN. FLOOR WIDTH	MAX. EAVE OVERHANG	WIND ZONE II			WIND ZONE III		
		SPACING	DBL. HEAD LOAD	ANCHOR ANGLE	SPACING	DBL. HEAD LOAD	ANCHOR ANGLE
12'-0"	6"	4'-0"	3950#	25°	2'-8"	3930#	20°
13'-4"	6"	4'-0"	3960#	25°	2'-8"	4000#	30°

THIS ALTERNATE APPLICATION REQUIRES 4,000 POUND ANCHORS

NOTES:

1. SEE AD-TD-0001 FOR ADDITIONAL REQUIREMENTS.
2. SEE AD-TD-0036 FOR MAXIMUM PIER HEIGHTS REQUIRED FOR THE LOADS TABULATED ABOVE.
3. MAX. EAVE OVERHANG REFERS TO OVERHANG AT SIDEWALL NOT FRONT OR REAR.
4. ABOVE TABLES APPLY TO 160" FLOOR OR 144" FLOOR WIDTHS WITH 95 1/2" I-BEAM SPACING, 96" MAXIMUM SIDEWALL HEIGHT AND 6" MAXIMUM SIDE OVERHANG (6" OVERHANG MAX. EACH SIDE OF UNIT).

ENGINEER APPROVAL: JOHN DOEDEN REGISTERED No. ENE8703571 STATE OF INDIANA PROFESSIONAL ENGINEER 6/4/95

DAPIA APPROVAL: APPROVED BY NTA INC. JUN 15 1995 FEDERAL MANUFACTURED HOUSE CONSTRUCTION AND SAFETY STANDARDS

JACOBSEN HOMES
P.O. BOX 368
SAFETY HARBOR, FLORIDA 34695
PHONE (813) 726-1138

NOTICE:
THESE SPECIFICATIONS AND DRAWINGS ARE ORIGINAL, PROPRIETARY, AND CONFIDENTIAL MATERIALS OF JACOBSEN MANUFACTURING INC. SUCH MATERIALS ARE PROVIDED TO THE RECIPIENT FOR SPECIFIC PURPOSES AND MUST BE KEPT CONFIDENTIAL AND SECRET FROM OTHERS.

DRAWN BY:	DATE:	REV. LETTER:
C.L.Y.	5-30-95	A
DRAWING TITLE: ALT. SPACING TABLES		
DRAWING NUMBER: AD-TD-0040		

4000# ANCHORS REQ'D

ADDENDUM

ALTERNATE TIE-DOWN SYSTEM

TYPICAL CROSS SECTION
SHOWING TIEDOWNS

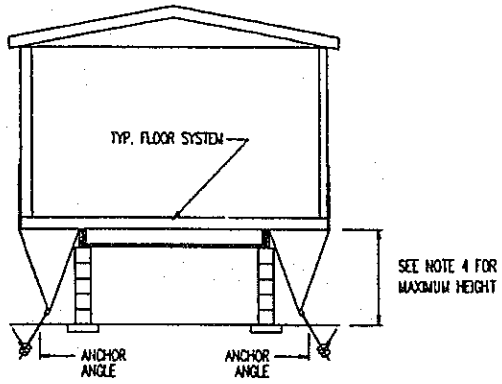

FIGURE 7.0

SEE FIGURE 1.3 FOR RECOMMENDED TIE-DOWN METHOD

IMPORTANT NOTICE:

THIS ALTERNATE APPLICATION REQUIRES 4,000 POUND ANCHORS

WHEN USING THIS TIE-DOWN CONFIGURATION A STYLE CREST PRODUCTS MODEL 57SH (TYPE 2), AUGER ANCHOR WITH A DESIGN LOAD (WORKING LOAD) RATING OF 4,000 POUNDS AND AN ULTIMATE LOAD RATING OF 6,000 POUNDS MUST BE USED. AN EQUIVILANT ANCHOR MEETING THE ABOVE SPECIFICATIONS MADE BY ANOTHER MANUFACTURER MAY BE USED IN LIEU OF THE STYLE CREST PRODUCTS ANCHOR.

NOTES:

1. SEE AD-TD-0001 FOR ADDITIONAL REQUIREMENTS.
2. SEE OTHER DETAILS FOR BLOCKING (PIER) QUANTITY AND OTHER REQUIREMENTS.
3. FOR FIGURE 7.0 SEE ALTERNATE TIE-DOWN SPACING TABLES (AD-TD-0035).
4. ZONE 2/EXPOSURE 'C': 38" MAXIMUM HEIGHT
   ZONE 2/EXPOSURE 'D': 28" MAXIMUM HEIGHT
   ZONE 3/EXPOSURE 'C': 28" MAXIMUM HEIGHT
   ZONE 3/EXPOSURE 'D': 28" MAXIMUM HEIGHT
5. SEE AD-TD-0035 FOR ADDITIONAL NOTES.

THE ALTERNATE TIE-DOWN METHODS SHOWN ABOVE ARE ACCEPTABLE FOR USE IN ALL WIND ZONES AND IN BOTH EXPOSURE 'C' AND EXPOSURE 'D', HOWEVER, BY INSTALLING THE FRAME TIE-DOWN STRAPS AT THE 'OUTBOARD' I-BEAM THE MAX. HEIGHT OFF THE GROUND IS GREATLY REDUCED. SEE OTHER DETAILS FOR THE RECOMMENDED METHODS FOR INSTALLING FRAME TIE-DOWNS.

ENGINEER APPROVAL:

JOHN C. DOEDEN
REGISTERED
No.
ENE8703571
STATE OF
INDIANA
PROFESSIONAL ENGINEER
6/4/95

DAPIA APPROVAL:

APPROVED BY
NTA INC.
JUN 1 5 1995
NATIONAL TRANSITIONAL MANUFACTURED HOME CONSTRUCTION AND SAFETY STANDARDS

JACOBSEN HOMES
P.O. BOX 368
SAFETY HARBOR, FLORIDA 34695
PHONE (813) 726-1138

NOTICE:
THESE SPECIFICATIONS AND DRAWINGS ARE ORIGINAL, PROPRIETARY, AND CONFIDENTIAL MATERIALS OF JACOBSEN MANUFACTURING INC. SUCH MATERIALS ARE PROVIDED TO THE RECIPIENT FOR SPECIFIC PURPOSES AND MUST BE KEPT CONFIDENTIAL AND SECRET FROM OTHERS.

DRAWN BY: C.L.Y.	DATE: 5-30-95	REV. LETTER: A
DRAWING TITLE: FIG. 7.0		
DRAWING NUMBER: AD-TD-0041		

ADDENDUM

MISC. TIE-DOWN

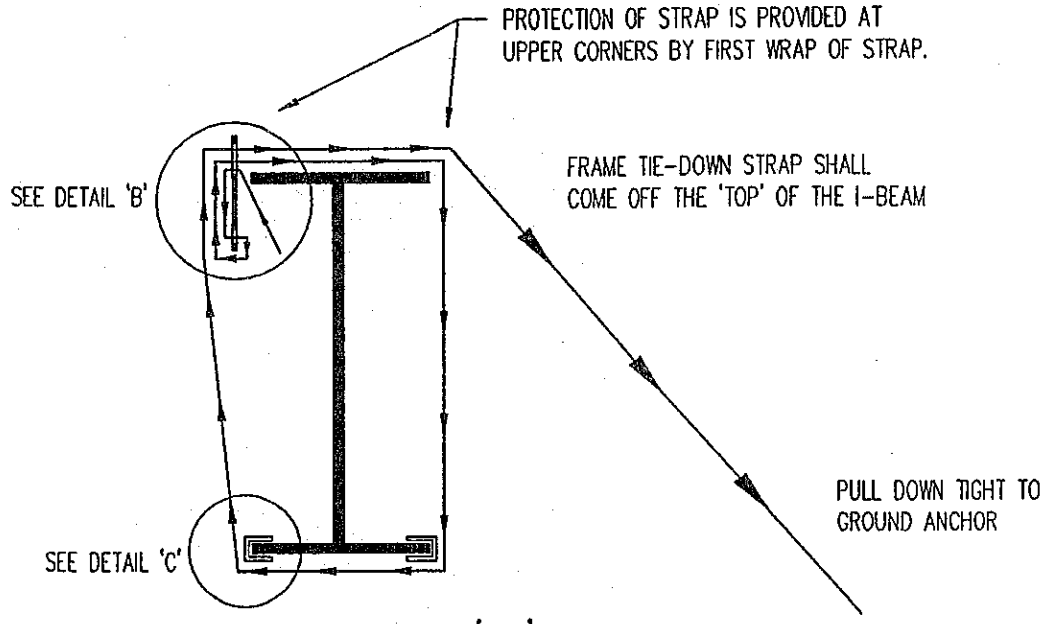

DETAIL 'A'

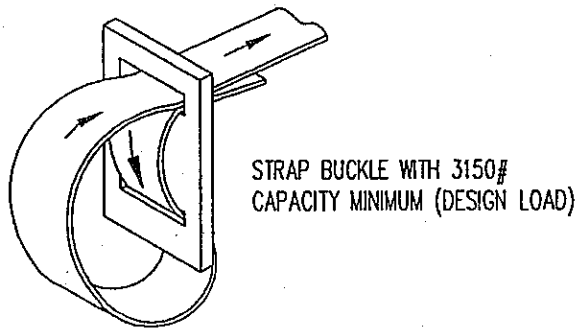

DETAIL 'B'

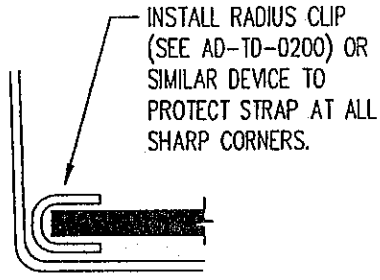

DETAIL 'C'

THIS TYPE OF PROTECTION MAY BE USED FOR PROTECTION AT LONGITUDINAL TIE CONNECTIONS ALSO.

NOTES:

1. SHOWN ABOVE IS ONLY ONE METHOD OF STRAP ATTACHMENT AT BEAM-OTHER METHODS THAT ARE CERTIFIED TO MEET THE REQUIRED DESIGN LOAD OF 3150# MAY BE USED.
2. PROTECTION SHALL BE PROVIDED AT SHARP CORNERS WHERE THE ANCHORING SYSTEM REQUIRES THE USE OF EXTERNAL STRAPS OR CABLES (SEE RADIUS CLIP).

ENGINEER APPROVAL: GARY L. STILWELL REGISTERED No. 910334 STATE OF INDIANA PROFESSIONAL ENGINEER 11/23/98

METHOD AND DEVICE CERTIFIED BY OTHERS

DAPIA APPROVAL: APPROVED BY NTA INC. REV. FEDERAL MANUFACTURED HOME CONSTRUCTION AND SAFETY STANDARDS NOV 24 1998

JACOBSEN HOMES
P.O. BOX 368
SAFETY HARBOR, FLORIDA 34695
PHONE (813) 726-1138

NOTICE: THESE SPECIFICATIONS AND DRAWINGS ARE ORIGINAL, PROPRIETARY, AND CONFIDENTIAL MATERIALS OF JACOBSEN MANUFACTURING INC. SUCH MATERIALS ARE PROVIDED TO THE RECIPIENT FOR SPECIFIC PURPOSES AND MUST BE KEPT CONFIDENTIAL AND SECRET FROM OTHERS.

DRAWN BY: M.T.	DATE: 11-18-98	REV. LETTER: B
DRAWING TITLE: MISC. TIE-DOWN		
DRAWING NUMBER: AD-TD-0050		

ADDENDUM

NORMAL TIE-DOWN SPACING TABLES
ZONE II & III/EXP. C & D

SEE FIGURES 10.0 & 10.1

EXPOSURE 'C'

LONGITUDINAL TIE-DOWN SPACING TABLE

MIN. FLOOR WIDTH	WIND ZONE II		WIND ZONE III	
	MIN. QTY. EA. END OF EA. SECTION	ANCHOR ANGLE MIN. θ	MIN. QTY. EA. END OF EA. SECTION	ANCHOR ANGLE MIN. θ
30'-8"	3	40	3	25

VERTICAL TIE-DOWN / FRAME TIE-DOWN SPACING TABLE

MIN. FLOOR WIDTH	MAX. EAVE OVERHANG	WIND ZONE II			WIND ZONE III		
		SPACING	DBL. HEAD LOAD	ANCHOR ANGLE	SPACING	DBL. HEAD LOAD	ANCHOR ANGLE
30'-8"	6"	6'-9"	3150#	41-46	5'-5"	3150#	44-49

EXPOSURE 'D'

LONGITUDINAL TIE-DOWN SPACING TABLE

MIN. FLOOR WIDTH	WIND ZONE II		WIND ZONE III	
	MIN. QTY. EA. END OF EA. SECTION	ANCHOR ANGLE MIN. θ	MIN. QTY. EA. END OF EA. SECTION	ANCHOR ANGLE MIN. θ
30'-8"	4	42	4	25

VERTICAL TIE-DOWN / FRAME TIE-DOWN SPACING TABLE

MIN. FLOOR WIDTH	MAX. EAVE OVERHANG	WIND ZONE II			WIND ZONE III		
		SPACING	DBL. HEAD LOAD	ANCHOR ANGLE	SPACING	DBL. HEAD LOAD	ANCHOR ANGLE
30'-8"	6"	4'-6"	3150#	46-50	4'-0"	3150#	49-52

WINDZONE III
(110 MPH)
20 PSF ROOF
10 PSF D.L.

REF. CALCS. CWA-94.01-94.16

NOTES:

1. SEE FULL ADDENDUM FOR ADDITIONAL REQUIREMENTS.
2. SEE AD-TD-0071 FOR MAXIMUM PIER HEIGHTS REQUIRED FOR THE LOADS TABULATED ABOVE.

ENGINEER APPROVAL: GARY STILWELL REGISTERED No. 910334 STATE OF INDIANA PROFESSIONAL ENGINEER 2/1/99

DAPIA APPROVAL: MAR 03 [illegible]
APPROVED BY NTA INC.
FEDERAL MANUFACTURED HOME CONSTRUCTION AND SAFETY STANDARDS

JACOBSEN HOMES
P.O. BOX 368
SAFETY HARBOR, FLORIDA 34695
PHONE (727) 726-1138

NOTICE:
THESE SPECIFICATIONS AND DRAWINGS ARE ORIGINAL, PROPRIETARY, AND CONFIDENTIAL MATERIALS OF JACOBSEN MANUFACTURING INC. SUCH MATERIALS ARE PROVIDED TO THE RECIPIENT FOR SPECIFIC PURPOSES AND MUST BE KEPT CONFIDENTIAL AND SECRET FROM OTHERS.

DRAWN BY: M.T.	DATE: 2-8-99	REV. LETTER:
DRAWING TITLE: NORM. SPACING TABLES		
DRAWING NUMBER: AD-TD-0070		

ADDENDUM

TIE-DOWN SYSTEM

TYPICAL SIDE ELEVATION
SHOWING TIE-DOWN SPACINGS

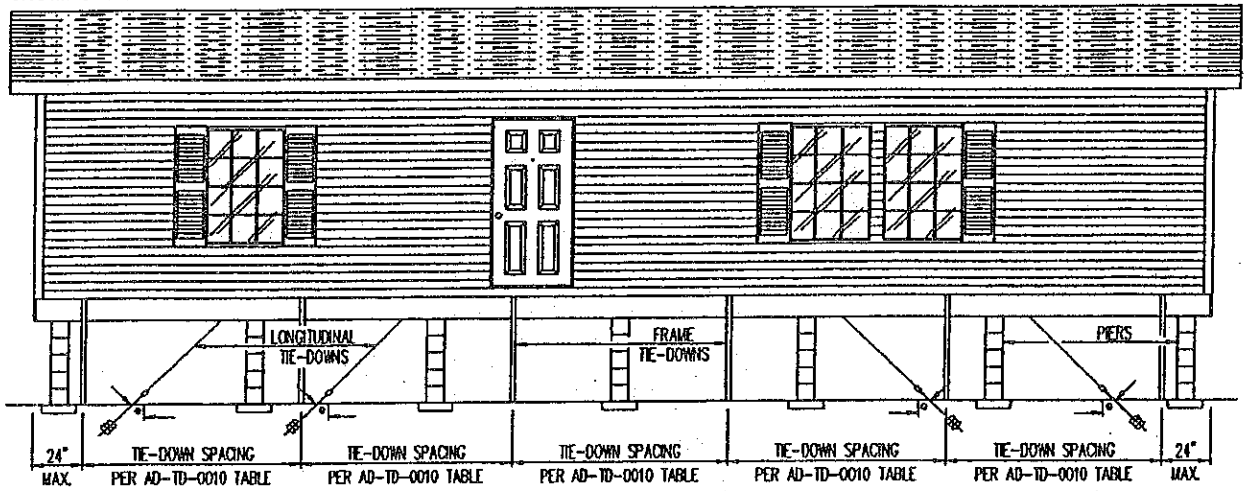

FIGURE 10.0

SEE FIGURE 2.0 FOR ALTERNATE TIE-DOWN METHOD

TYPICAL CROSS SECTION
SHOWING TIEDOWNS

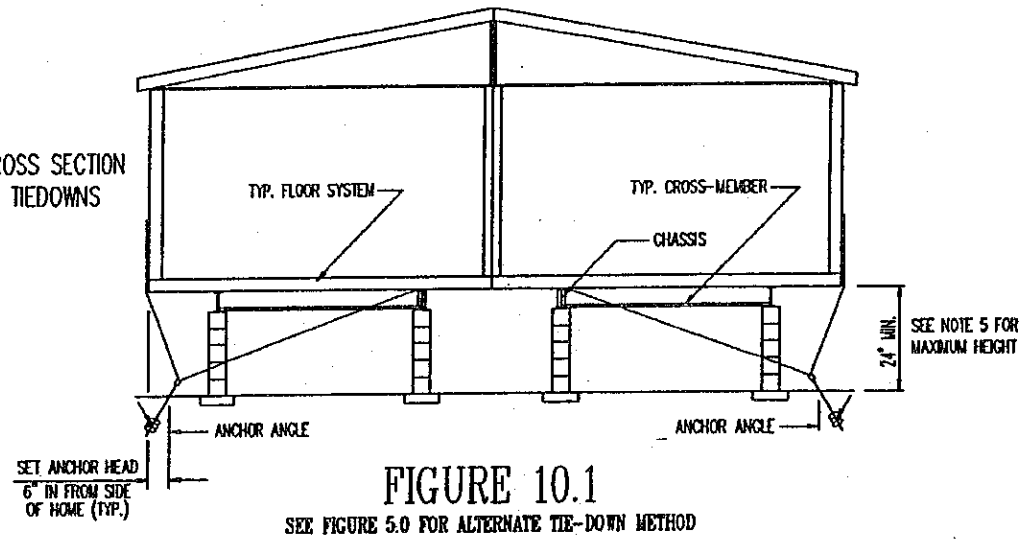

FIGURE 10.1

SEE FIGURE 5.0 FOR ALTERNATE TIE-DOWN METHOD

WINDZONE III
(110 MPH)
20 PSF ROOF
10 PSF D.L.

REF. CALCS. CWA. 91.01 - 91.16

ENGINEER APPROVAL: GARY L. STILWELL REGISTERED No. 910334 STATE OF INDIANA PROFESSIONAL ENGINEER

DAPIA APPROVAL: APPROVED BY NTA INC. FEDERAL MANUFACTURED HOME CONSTRUCTION AND SAFETY STANDARDS JAN 1 8 2004

NOTES:

1. SEE AD-TD-0070 FOR SPACING TABLES.
2. SEE AD-TD-0070 FOR QUANITY OF LONGITUDIAL TIE-DOWN STRAPS REQUIRED.
3. SEE OTHER DETAILS FOR BLOCKING (PIER) QUANTITY AND OTHER REQUIREMENTS.
4. SEE FULL ADDENDUM FOR ADDITIONAL REQUIREMENTS.
5. ZONE 2/EXPOSURE 'C': 56" MAXIMUM HEIGHT
   ZONE 2/EXPOSURE 'D': 40" MAXIMUM HEIGHT
   ZONE 3/EXPOSURE 'C': 56" MAXIMUM HEIGHT
   ZONE 3/EXPOSURE 'D': 40" MAXIMUM HEIGHT

JACOBSEN HOMES
P.O. BOX 368
SAFETY HARBOR, FLORIDA 34695
PHONE (727) 726-1138

NOTICE:
THESE SPECIFICATIONS AND DRAWINGS ARE ORIGINAL, PROPRIETARY, AND CONFIDENTIAL MATERIALS OF JACOBSEN MANUFACTURING INC. SUCH MATERIALS ARE PROVIDED TO THE RECIPIENT FOR SPECIFIC PURPOSES AND MUST BE KEPT CONFIDENTIAL AND SECRET FROM OTHERS.

DRAWN BY: M.T.	DATE: 3-1-99	REV. LETTER:
DRAWING TITLE: FIGURES 10.0 AND 10.1		
DRAWING NUMBER: AD-TD-0071		

ADDENDUM

NORMAL TIE-DOWN SPACING TABLES
ZONE II & III/EXP. C & D

SEE FIGURES 10.2 & 10.3

EXPOSURE 'C'

LONGITUDINAL TIE-DOWN SPACING TABLE

MIN. FLOOR WIDTH	WIND ZONE II		WIND ZONE III	
	MIN. QTY. EA. END OF EA. SECTION	ANCHOR ANGLE MIN. θ	MIN. QTY. EA. END OF EA. SECTION	ANCHOR ANGLE MIN. θ
15'-4"	3	45	3	35

VERTICAL TIE-DOWN / FRAME TIE-DOWN SPACING TABLE

MIN. FLOOR WIDTH	MAX. EAVE OVERHANG	WIND ZONE II			WIND ZONE III		
		SPACING	DBL. HEAD LOAD	ANCHOR ANGLE	SPACING	DBL. HEAD LOAD	ANCHOR ANGLE
15'-4"	6" EACH SIDE	6'-10"	3150#	40-46	5'-6"	3150#	42-47

EXPOSURE 'D'

LONGITUDINAL TIE-DOWN SPACING TABLE

MIN. FLOOR WIDTH	WIND ZONE II		WIND ZONE III	
	MIN. QTY. EA. END OF EA. SECTION	ANCHOR ANGLE MIN. θ	MIN. QTY. EA. END OF EA. SECTION	ANCHOR ANGLE MIN. θ
15'-4"	3	30	4	35

VERTICAL TIE-DOWN / FRAME TIE-DOWN SPACING TABLE

MIN. FLOOR WIDTH	MAX. EAVE OVERHANG	WIND ZONE II			WIND ZONE III		
		SPACING	DBL. HEAD LOAD	ANCHOR ANGLE	SPACING	DBL. HEAD LOAD	ANCHOR ANGLE
15'-4"	6" EACH SIDE	4'-6"	3150#	42-50	4'-0"	3150#	44-50

WINDZONE III
(110 MPH)
20 PSF ROOF
10 PSF D.L.

REF. CALCS. CWA-92.01-92.16

NOTES:

1. SEE FULL ADDENDUM FOR ADDITIONAL REQUIREMENTS.
2. SEE AD-TD-0073 FOR MAXIMUM PIER HEIGHTS REQUIRED FOR THE LOADS TABULATED ABOVE.
3. MAX. EAVE OVERHANG REFERS TO OVERHANG AT SIDEWALL NOT FRONT OR REAR.
4. ABOVE TABLES APPLY TO 184" FLOOR WIDTHS WITH 95 1/2" I-BEAM SPACING, 96" MAXIMUM SIDEWALL HEIGHT AND 6" MAXIMUM SIDE OVERHANG (6" OVERHANG MAX. EACH SIDE OF UNIT).

ENGINEER APPROVAL: GARY L. STILWELL REGISTERED No. 910334 STATE OF INDIANA PROFESSIONAL ENGINEER 4/08/99

DAPIA APPROVAL: MAR 08 1999

APPROVED BY NTA INC. FEDERAL MANUFACTURED HOME CONSTRUCTION AND SAFETY STANDARDS

JACOBSEN HOMES
P.O. BOX 368
SAFETY HARBOR, FLORIDA 34695
PHONE (727) 726-1138

NOTICE:
THESE SPECIFICATIONS AND DRAWINGS ARE ORIGINAL, PROPRIETARY, AND CONFIDENTIAL MATERIALS OF JACOBSEN MANUFACTURING INC. SUCH MATERIALS ARE PROVIDED TO THE RECIPIENT FOR SPECIFIC PURPOSES AND MUST BE KEPT CONFIDENTIAL AND SECRET FROM OTHERS.

DRAWN BY:	DATE:	REV. LETTER:
M.T.	2-8-99	

DRAWING TITLE: NORM. SPACING TABLES

DRAWING NUMBER: AD-TD-0072

ADDENDUM

TIE-DOWN SYSTEM

TYPICAL SIDE ELEVATION
SHOWING TIE-DOWN SPACINGS

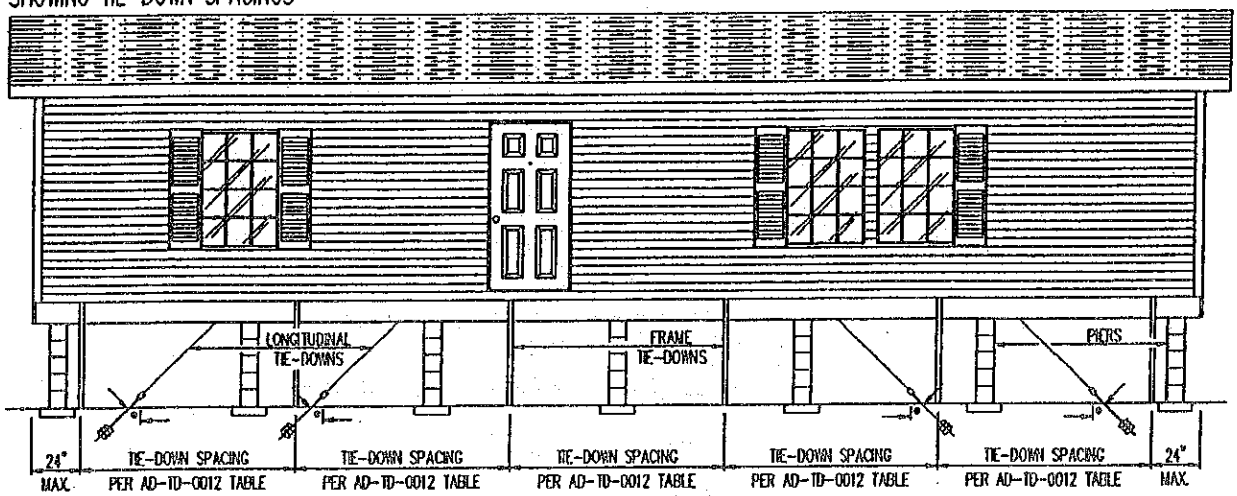

FIGURE 10.2

SEE FIGURE 2.0 FOR ALTERNATE TIE-DOWN METHOD

TYPICAL CROSS SECTION
SHOWING TIEDOWNS

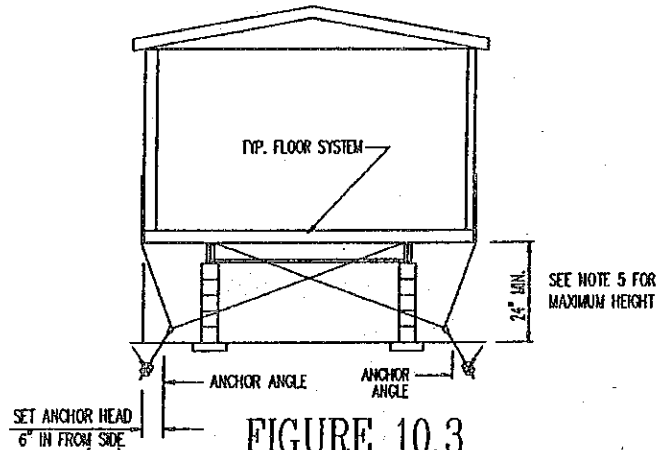

FIGURE 10.3

SEE FIGURE 7.0 FOR ALTERNATE TIE-DOWN METHOD

WINDZONE III
(110 MPH)
20 PSF ROOF
10 PSF D.L.

REF. CALCS. CVA-92.01-92.16

ENGINEER APPROVAL

GARY STILWELL REGISTERED No. 910334 STATE OF INDIANA PROFESSIONAL ENGINEER 3/2/99

DAPIA APPROVAL

APPROVED BY NTA INC. FEDERAL MANUFACTURED HOME CONSTRUCTION AND SAFETY STANDARDS JAN 16 2004

NOTES:

1. SEE AD-TD-0072 FOR SPACING TABLES AND NOTES.
2. SEE AD-TD-0072 FOR QUANITY OF LONGITUDIAL TIE-DOWN STRAPS REQUIRED.
3. SEE OTHER DETAILS FOR BLOCKING (PIER) QUANTITY AND OTHER REQUIREMENTS.
4. SEE FULL ADDENDUM FOR ADDITIONAL REQUIREMENTS.
5. ZONE 2/EXPOSURE 'C': 56" MAXIMUM HEIGHT
   ZONE 2/EXPOSURE 'D': 56" MAXIMUM HEIGHT
   ZONE 3/EXPOSURE 'C': 56" MAXIMUM HEIGHT
   ZONE 3/EXPOSURE 'D': 56" MAXIMUM HEIGHT

JACOBSEN HOMES
P.O. BOX 368
SAFETY HARBOR, FLORIDA 34695
PHONE (727) 726-1138

NOTICE:
THESE SPECIFICATIONS AND DRAWINGS ARE ORIGINAL, PROPRIETARY, AND CONFIDENTIAL MATERIALS OF JACOBSEN MANUFACTURING INC. SUCH MATERIALS ARE PROVIDED TO THE RECIPIENT FOR SPECIFIC PURPOSES AND MUST BE KEPT CONFIDENTIAL AND SECRET FROM OTHERS.

DRAWN BY: M.T.	DATE: 3-1-99	REV. LETTER:
DRAWING TITLE: FIGURES 10.2 AND 10.3		
DRAWING NUMBER: AD-TD-0073		

ADDENDUM

OFFSET UNIT TIE-DOWN SPACING TABLES
ZONE II & III/EXP. C & D

SEE FIGURES 11.0, 11.1 & 11.2

EXPOSURE 'C'

LONGITUDINAL TIE-DOWN SPACING TABLE

MIN. FLOOR WIDTH	WIND ZONE II		WIND ZONE III	
	MIN. QTY. EA. END OF EA. SECTION	ANCHOR ANGLE MIN. θ	MIN. QTY. EA. END OF EA. SECTION	ANCHOR ANGLE MIN. θ
12'-0"	3	47°	3	61°
13'-4"	2	54°	3	41°
15'-4"	2	54°	3	41°

VERTICAL TIE-DOWN / FRAME TIE-DOWN SPACING TABLE

MIN. FLOOR WIDTH	MAX. EAVE OVERHANG	WIND ZONE II			WIND ZONE III		
		SPACING	DBL. HEAD LOAD	ANCHOR ANGLE	SPACING	DBL. HEAD LOAD	ANCHOR ANGLE
12'-0"	12"	5'-0"	3150#	40°	4'-0"	3150#	39°
13'-4"	12"	5'-0"	3150#	41°	4'-0"	3000#	40°
15'-4"	12"	5'-0"	3150#	43°	4'-0"	3000#	42°

EXPOSURE 'D'

LONGITUDINAL TIE-DOWN SPACING TABLE

MIN. FLOOR WIDTH	WIND ZONE II		WIND ZONE III	
	MIN. QTY. EA. END OF EA. SECTION	ANCHOR ANGLE MIN. θ	MIN. QTY. EA. END OF EA. SECTION	ANCHOR ANGLE MIN. θ
12'-0"	4	45°	4	60°
13'-4"	3	45°	3	60°
15'-4"	3	45°	3	60°

VERTICAL TIE-DOWN / FRAME TIE-DOWN SPACING TABLE

MIN. FLOOR WIDTH	MAX. EAVE OVERHANG	WIND ZONE II			WIND ZONE III		
		SPACING	DBL. HEAD LOAD	ANCHOR ANGLE	SPACING	DBL. HEAD LOAD	ANCHOR ANGLE
12'-0"	12"	4'-0"	3150#	40°	3'-0"	3000#	38°
13'-4"	12"	4'-0"	3065#	41°	3'-0"	3000#	39°
15'-4"	12"	4'-0"	3065#	43°	3'-0"	3000#	41°

NOTES: 266-CALCS, C-SU-16.01-16.12

1. OFFSET SECTION WITH THE MARRIAGE LINE WALL EXTENDING BEYOND THE ENDWALL OF THE ADJACENT SECTION MUST BE TIED DOWN AT THE MARRIAGE LINE IN ACCORDANCE WITH THE TABLES ABOVE. THE SIDEWALL SIDE AND THE ADJACENT SECTION(S) ARE TO BE TIED DOWN IN ACCORDANCE WITH THE NORMAL SPACING TABLES (SEE AD-TD-0010 FOR 12'-0" & 13'-4" WIDES, AND AD-TD-0070 FOR 15'-4" WIDES).
2. SEE AD-TD-0001 FOR ADDITIONAL REQUIREMENTS.
3. SEE AD-TD-0081 FOR MAXIMUM PIER HEIGHT REQUIRED FOR THE LOADS TABULATED ABOVE.

ENGINEER APPROVAL: JOHN C. DOEDEN CERTIFICATE No. 0045484 STATE OF FLORIDA REGISTERED ENGINEER

REF. CALCS. (C-SU-17.01-17.08)

DAPIA APPROVAL: APPROVED BY NIA INC. JUN 11 2004 FEDERAL MANUFACTURED HOME CONSTRUCTION AND SAFETY STANDARDS

JACOBSEN HOMES
P.O. BOX 368
SAFETY HARBOR, FLORIDA 34695
PHONE (727) 726-1138

NOTICE: THESE SPECIFICATIONS AND DRAWINGS ARE ORIGINAL, PROPRIETARY, AND CONFIDENTIAL MATERIALS OF JACOBSEN MANUFACTURING INC. SUCH MATERIALS ARE PROVIDED TO THE RECIPIENT FOR SPECIFIC PURPOSES AND MUST BE KEPT CONFIDENTIAL AND SECRET FROM OTHERS.

DRAWN BY:	DATE:	REV. LETTER:
M.T.	6-8-04	A

DRAWING TITLE: OFFSET SPACING TABLES

DRAWING NUMBER: AD-TD-0080

ADDENDUM

OFFSET UNIT TIE-DOWN SYSTEM

TYPICAL SIDE ELEVATION (W/ OFFSET SECTION)
SHOWING TIE-DOWN SPACINGS

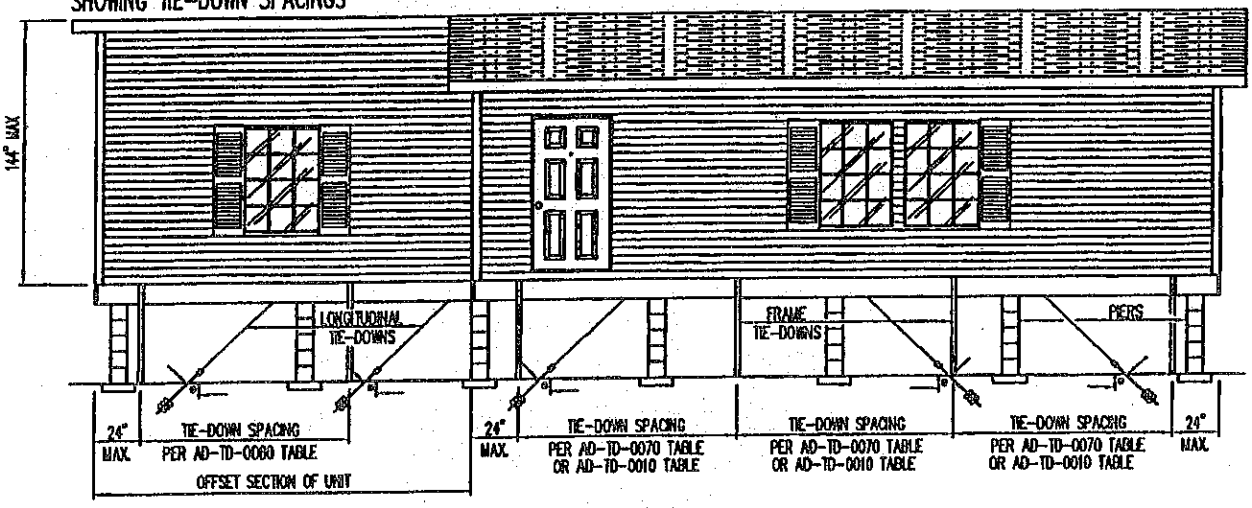

FIGURE 11.0

SEE FIGURE 4.0 FOR ALTERNATE TIE-DOWN METHOD

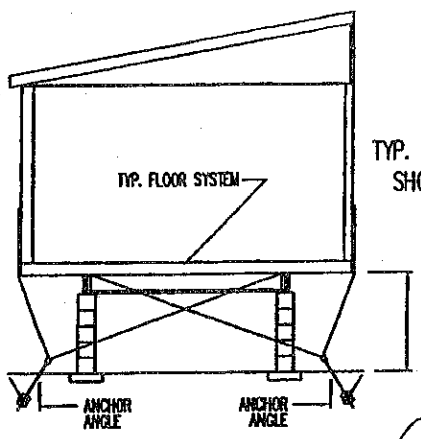

TYP. CROSS SECTION(S) SHOWING TIEDOWNS

(REF. CALCS. PG. C-SU-16.01-16.12)

FIGURE 11.1

SEE FIGURE 6.0 FOR ALTERNATE TIE-DOWN METHOD

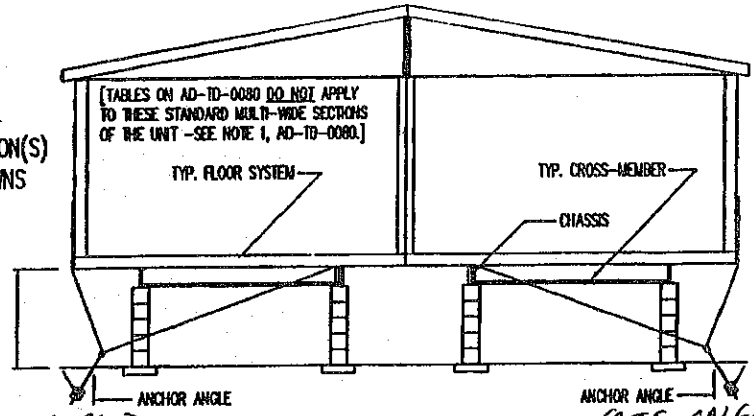

(REF. CALC. C-SU-17.01-17.08)

FIGURE 11.2

SEE FIGURE 6.1 FOR ALTERNATE TIE-DOWN METHOD

NOTES:

1. SEE AD-TD-0080 FOR SPACING TABLES (OFFSET SECTION ONLY).
2. SEE AD-TD-0080 FOR QUANITY OF LONGITUDIAL TIE-DOWN STRAPS REQUIRED. (OFFSET SECTION ONLY)
3. SEE OTHER DETAILS FOR BLOCKING (PIER) QUANTITY AND OTHER REQUIREMENTS.
4. SEE AD-TD-0001 FOR ADDITIONAL REQUIREMENTS.
5. ZONE 2/EXPOSURE 'C': 48" MAXIMUM HEIGHT
   ZONE 2/EXPOSURE 'D': 40" MAXIMUM HEIGHT-36" FOR 12'-0" WIDE UNITS
   ZONE 3/EXPOSURE 'C': 48" MAXIMUM HEIGHT
   ZONE 3/EXPOSURE 'D': 40" MAXIMUM HEIGHT

ENGINEER APPROVAL:
JOHN C. DODEDEN
CERTIFICATE No. 0045484
6/8/04
STATE OF FLORIDA
REGISTERED ENGINEER

DAPIA APPROVAL:
APPROVED BY
NTA INC.
JUN 11 2004
FEDERAL MANUFACTURED HOME CONSTRUCTION AND SAFETY STANDARDS

JACOBSEN HOMES
P.O. BOX 368
SAFETY HARBOR, FLORIDA 34695
PHONE (727) 726-1138

NOTICE:
THESE SPECIFICATIONS AND DRAWINGS ARE ORIGINAL, PROPRIETARY, AND CONFIDENTIAL MATERIALS OF JACOBSEN MANUFACTURING INC. SUCH MATERIALS ARE PROVIDED TO THE RECIPIENT FOR SPECIFIC PURPOSES AND MUST BE KEPT CONFIDENTIAL AND SECRET FROM OTHERS.

DRAWN BY: M.T.	DATE: 6-8-04	REV. LETTER: A
DRAWING TITLE: FIG. 11.0, 11.1 & 11.2		
DRAWING NUMBER: AD-TD-0081		

ADDENDUM

ALTERNATE OFFSET UNIT TIE-DOWN SYSTEM

TYPICAL SIDE ELEVATION (W/ OFFSET SECTION)
SHOWING TIE-DOWN SPACINGS

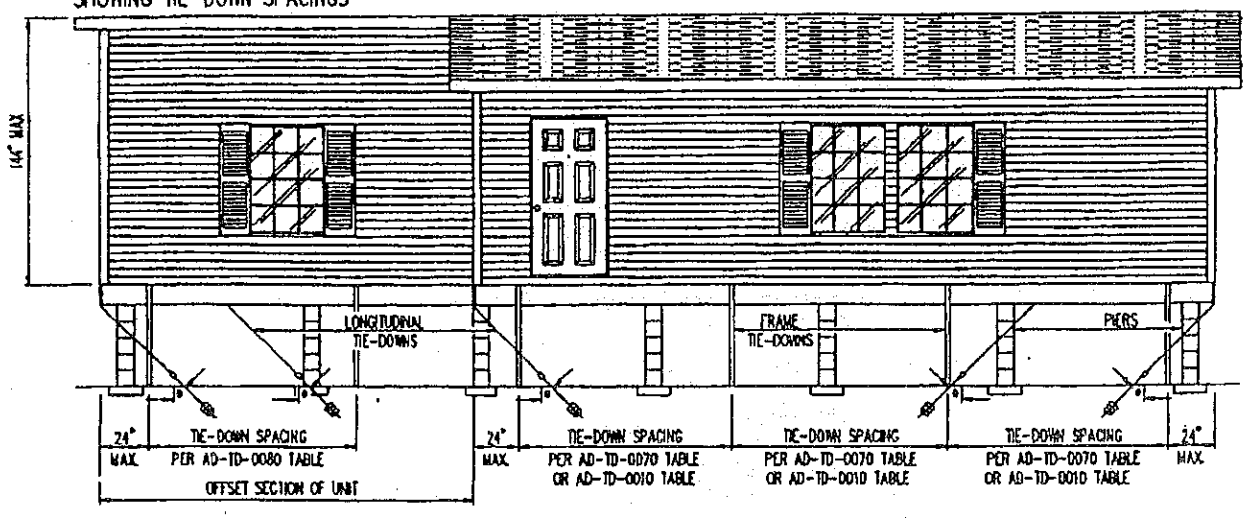

FIGURE 12.0

(SEE CALCS. PG. C-SU-16.01-16.12)

SEE FIGURES 11.1 AND 11.2 FOR TYP. CROSS-SECTION

NOTES:

1. SEE AD-TD-0080 FOR SPACING TABLES (OFFSET SECTION ONLY).
2. SEE AD-TD-0080 FOR QUANITY OF LONGITUDIAL TIE-DOWN STRAPS REQUIRED. (OFFSET SECTION ONLY)
3. SEE OTHER DETAILS FOR BLOCKING (PIER) QUANTITY AND OTHER REQUIREMENTS.
4. SEE AD-TD-0001 FOR ADDITIONAL REQUIREMENTS.

ENGINEER APPROVAL: GARY L. STILWELL REGISTERED No. 910334 STATE OF INDIANA PROFESSIONAL ENGINEER

DAPIA APPROVAL: APPROVED BY NTS INC. FEDERAL MANUFACTURED HOME CONSTRUCTION AND SAFETY STANDARDS MAY 16 2001

JACOBSEN HOMES
P.O. BOX 368
SAFETY HARBOR, FLORIDA 34695
PHONE (727) 726-1138

NOTICE: THESE SPECIFICATIONS AND DRAWINGS ARE ORIGINAL, PROPRIETARY, AND CONFIDENTIAL MATERIALS OF JACOBSEN MANUFACTURING INC. SUCH MATERIALS ARE PROVIDED TO THE RECIPIENT FOR SPECIFIC PURPOSES AND MUST BE KEPT CONFIDENTIAL AND SECRET FROM OTHERS.

DRAWN BY: R.R.	DATE: 5-9-01	REV. LETTER: —
DRAWING TITLE: FIG. 12.0		
DRAWING NUMBER: AD-TD-0082		

ADDENDUM

108" HIGH SIDEWALL TIE-DOWN SPACING TABLES
ZONE II & III/EXP. C & D

SEE FIGURES 10.0 & 10.1

EXPOSURE 'C'

LONGITUDINAL TIE-DOWN SPACING TABLE

MIN. FLOOR WIDTH	WIND ZONE II		WIND ZONE III	
	MIN. QTY. EA. END OF EA. SECTION	ANCHOR ANGLE MIN. θ	MIN. QTY. EA. END OF EA. SECTION	ANCHOR ANGLE MIN. θ
26'-8"	3	42°	3	53°
30'-8"	3	52°	4	45°

VERTICAL TIE-DOWN / FRAME TIE-DOWN SPACING TABLE

MIN. FLOOR WIDTH	MAX. EAVE OVERHANG	WIND ZONE II			WIND ZONE III		
		SPACING	DBL. HEAD LOAD	ANCHOR ANGLE	SPACING	DBL. HEAD LOAD	ANCHOR ANGLE
26'-8"	6"	6'-8"	3150#	40°-50°	5'-4"	3150#	40°-50°
30'-8"	6"	6'-8"	3150#	40°-50°	5'-4"	3150#	40°-50°

EXPOSURE 'D'

LONGITUDINAL TIE-DOWN SPACING TABLE

MIN. FLOOR WIDTH	WIND ZONE II		WIND ZONE III	
	MIN. QTY. EA. END OF EA. SECTION	ANCHOR ANGLE MIN. θ	MIN. QTY. EA. END OF EA. SECTION	ANCHOR ANGLE MIN. θ
26'-8"	4	41°	4	52°
30'-8"	4	51°	4	70°

VERTICAL TIE-DOWN / FRAME TIE-DOWN SPACING TABLE

MIN. FLOOR WIDTH	MAX. EAVE OVERHANG	WIND ZONE II			WIND ZONE III		
		SPACING	DBL. HEAD LOAD	ANCHOR ANGLE	SPACING	DBL. HEAD LOAD	ANCHOR ANGLE
26'-8"	6"	5'-4"	3150#	40°-50°	4'-0"	3150#	40°-45°
30'-8"	6"	5'-4"	3150#	40°-50°	4'-0"	3150#	40°-45°

WINDZONE III
(110 MPH)
20 PSF ROOF
10 PSF D.L.

REF. CALCS. CSV-18.01-18.23

NOTES:

1. SEE FULL ADDENDUM FOR ADDITIONAL REQUIREMENTS.
2. SEE AD-TD-0084 FOR MAXIMUM PIER HEIGHTS REQUIRED FOR THE LOADS TABULATED ABOVE.

ENGINEER APPROVAL: JOHN C. DO... CERTIFICATE No. 0045484 STATE OF FLORIDA REGISTERED ENGINEER

DAPIA APPROVAL: APPROVED BY NTA INC. FEDERAL MANUFACTURED HOME CONSTRUCTION AND SAFETY STANDARDS JUL 27 2004

JACOBSEN HOMES
P.O. BOX 368
SAFETY HARBOR, FLORIDA 34695
PHONE (727) 726-1138

NOTICE:
THESE SPECIFICATIONS AND DRAWINGS ARE ORIGINAL, PROPRIETARY, AND CONFIDENTIAL MATERIALS OF JACOBSEN MANUFACTURING INC. SUCH MATERIALS ARE PROVIDED TO THE RECIPIENT FOR SPECIFIC PURPOSES AND MUST BE KEPT CONFIDENTIAL AND SECRET FROM OTHERS.

DRAWN BY: M.T.	DATE: 07-20-04	REV. LETTER:
DRAWING TITLE: 108" HIGH SIDEWALL SPACING TABLES		
DRAWING NUMBER: AD-TD-0083		

ADDENDUM

TIE-DOWN SYSTEM

TYPICAL SIDE ELEVATION
SHOWING TIE-DOWN SPACINGS

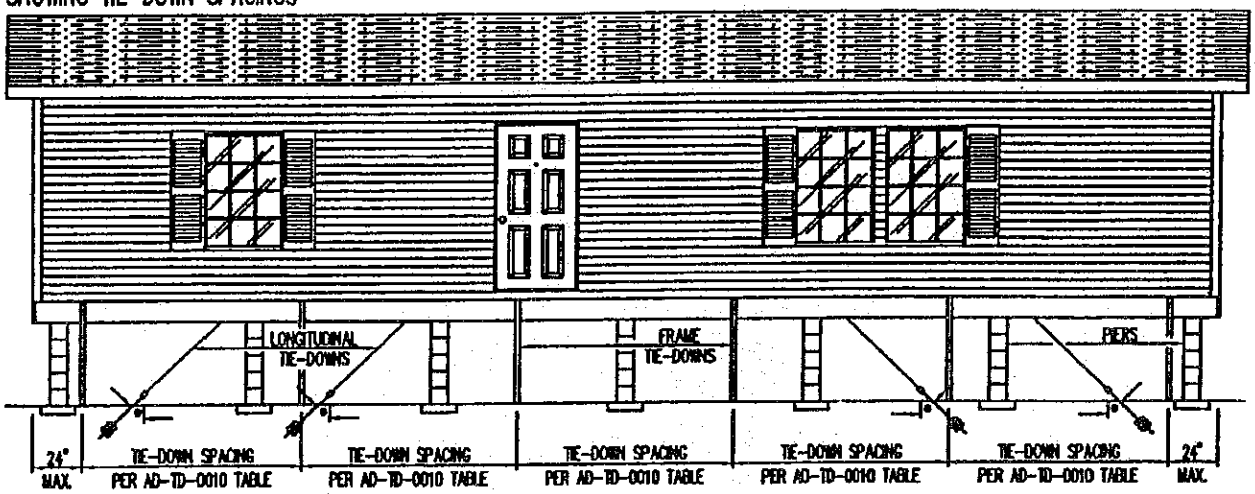

FIGURE 10.0

TYPICAL CROSS SECTION
SHOWING TIEDOWNS

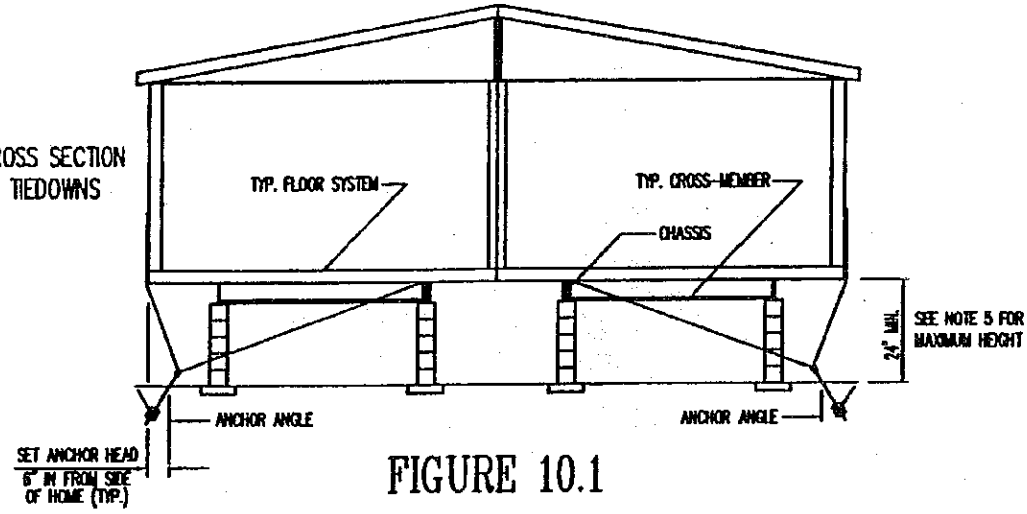

FIGURE 10.1

WINDZONE III
(110 MPH)
20 PSF ROOF
10 PSF D.L.

REF. CALCS. C SV-18.01- 18.23

ENGINEER APPROVAL: JOHN C. DOBDEN CERTIFICATE No. 0046484 STATE OF FLORIDA REGISTERED ENGINEER

DAPIA APPROVAL: APPROVED BY NTA INC. FEDERAL MANUFACTURED HOME CONSTRUCTION AND SAFETY STANDARDS JUL 27 2004

NOTES:

1. SEE AD-TD-0083 FOR SPACING TABLES.
2. SEE AD-TD-0083 FOR QUANITY OF LONGITUDIAL TIE-DOWN STRAPS REQUIRED.
3. SEE OTHER DETAILS FOR BLOCKING (PIER) QUANTITY AND OTHER REQUIREMENTS.
4. SEE FULL ADDENDUM FOR ADDITIONAL REQUIREMENTS.
5. ZONE 2/EXPOSURE 'C': 36" MAXIMUM HEIGHT
   ZONE 2/EXPOSURE 'D': 27" MAXIMUM HEIGHT
   ZONE 3/EXPOSURE 'C': 38" MAXIMUM HEIGHT
   ZONE 3/EXPOSURE 'D': 32" MAXIMUM HEIGHT
6. ALL SPECIFICATIONS ARE BASED ON 20° ROOF ANGLE MAX.

JACOBSEN HOMES
P.O. BOX 368
SAFETY HARBOR, FLORIDA 34695
PHONE (727) 726-1138

NOTICE:
THESE SPECIFICATIONS AND DRAWINGS ARE ORIGINAL, PROPRIETARY, AND CONFIDENTIAL MATERIALS OF JACOBSEN MANUFACTURING INC. SUCH MATERIALS ARE PROVIDED TO THE RECIPIENT FOR SPECIFIC PURPOSES AND MUST BE KEPT CONFIDENTIAL AND SECRET FROM OTHERS.

DRAWN BY: M.T.	DATE: 07-20-04	REV. LETTER:
DRAWING TITLE: FIGURES 10.0 AND 10.1		
DRAWING NUMBER: AD-TD-0084		

ADDENDUM

108" HIGH SIDEWALL TIE-DOWN SPACING TABLES
ZONE II & III/EXP. C & D

SEE FIGURES 10.0 & 10.1

EXPOSURE 'C'

LONGITUDINAL TIE-DOWN SPACING TABLE

MIN. FLOOR WIDTH	WIND ZONE II		WIND ZONE III	
	MIN. QTY. EA. END OF EA. SECTION	ANCHOR ANGLE MIN. θ	MIN. QTY. EA. END OF EA. SECTION	ANCHOR ANGLE MIN. θ
23'-4"	2	58°	3	43°
24'-0"	2	62°	3	45°

VERTICAL TIE-DOWN / FRAME TIE-DOWN SPACING TABLE

MIN. FLOOR WIDTH	MAX. EAVE OVERHANG	WIND ZONE II			WIND ZONE III		
		SPACING	DBL. HEAD LOAD	ANCHOR ANGLE	SPACING	DBL. HEAD LOAD	ANCHOR ANGLE
23'-4"	6"	6'-8"	3150#	49°	5'-4"	3150#	45°
24'-0"	6"	6'-8"	3150#	49°	5'-4"	3150#	45°

EXPOSURE 'D'

LONGITUDINAL TIE-DOWN SPACING TABLE

MIN. FLOOR WIDTH	WIND ZONE II		WIND ZONE III	
	MIN. QTY. EA. END OF EA. SECTION	ANCHOR ANGLE MIN. θ	MIN. QTY. EA. END OF EA. SECTION	ANCHOR ANGLE MIN. θ
23'-4"	3	48°	4	43°
24'-0"	3	50°	4	45°

VERTICAL TIE-DOWN / FRAME TIE-DOWN SPACING TABLE

MIN. FLOOR WIDTH	MAX. EAVE OVERHANG	WIND ZONE II			WIND ZONE III		
		SPACING	DBL. HEAD LOAD	ANCHOR ANGLE	SPACING	DBL. HEAD LOAD	ANCHOR ANGLE
23'-4"	6"	5'-4"	3150#	47°	4'-0"	3150#	43°
24'-0"	6"	5'-4"	3150#	47°	4'-0"	3150#	43°

108" MAX. SIDEWALL HEIGHT

WINDZONE II/III
(110 MPH)
20 PSF ROOF
10 PSF D.L.

REF. CALCS.

NOTES:

1. SEE FULL ADDENDUM FOR ADDITIONAL REQUIREMENTS.
2. SEE AD-TD-0086 FOR MAXIMUM PIER HEIGHTS REQUIRED FOR THE LOADS TABULATED ABOVE.

ENGINEER APPROVAL: JOHN R. BRADEN CERTIFICATE NO. 0045184 12/5/06 STATE OF FLORIDA REGISTERED ENGINEER

DAPIA APPROVAL:
APPROVED BY
NTA INC. Dec. 13, 2006
FEDERAL MANUFACTURED HOME CONSTRUCTION AND SAFETY STANDARDS

JACOBSEN HOMES
P.O. BOX 368
SAFETY HARBOR, FLORIDA 34695
PHONE (727) 726-1138

NOTICE:
THESE SPECIFICATIONS AND DRAWINGS ARE ORIGINAL, PROPRIETARY, AND CONFIDENTIAL MATERIALS OF JACOBSEN MANUFACTURING INC. SUCH MATERIALS ARE PROVIDED TO THE RECIPIENT FOR SPECIFIC PURPOSES AND MUST BE KEPT CONFIDENTIAL AND SECRET FROM OTHERS.

DRAWN BY: R.R.	DATE: 11-28-06	REV. LETTER:	
DRAWING TITLE: 108" HIGH SIDEWALL SPACING TABLES			
DRAWING NUMBER: AD-TD-0085			

ADDENDUM

TIE-DOWN SYSTEM

TYPICAL SIDE ELEVATION
SHOWING TIE-DOWN SPACINGS

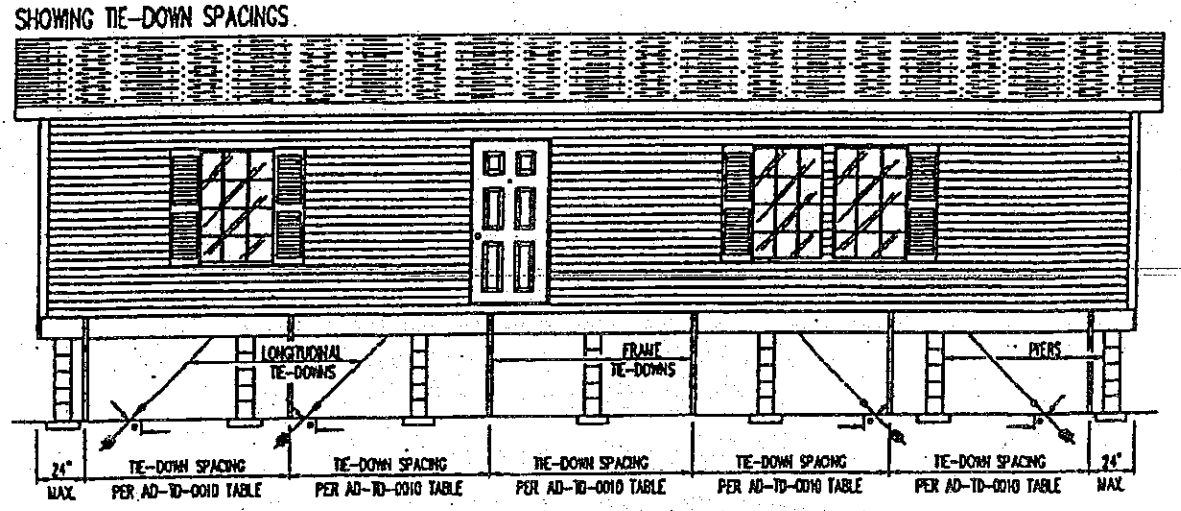

FIGURE 10.0

TYPICAL CROSS SECTION
SHOWING TIEDOWNS

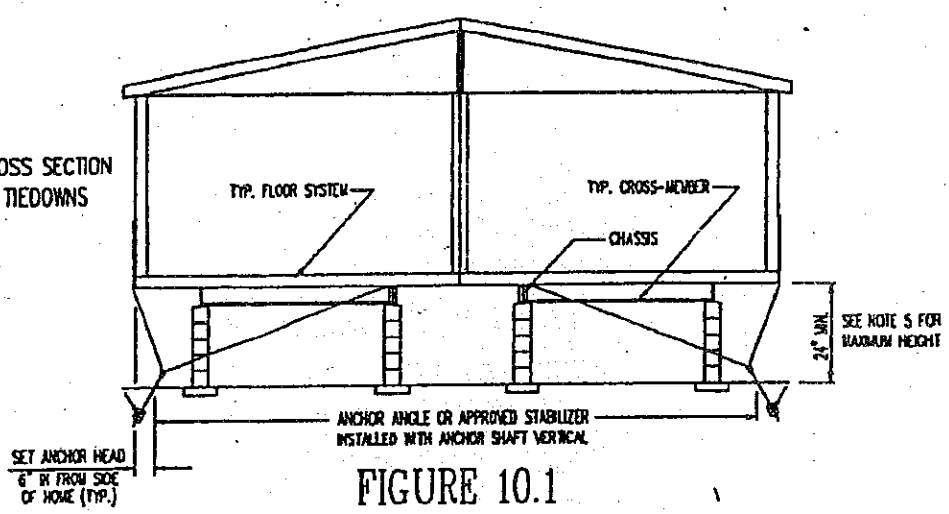

FIGURE 10.1

WINDZONE II/III
(110 MPH)
20 PSF ROOF
10 PSF D.L.

REF. CALCS.

ENGINEER APPROVAL:

JOHN A. ROEDER CERTIFICATE No. 0045484 STATE OF FLORIDA REGISTERED ENGINEER

12/5/06

DAPIA APPROVAL:

APPROVED BY NTA INC. Dec 13,2006
FEDERAL MANUFACTURED HOME CONSTRUCTION AND SAFETY STANDARDS

NOTES:

1. SEE AD-TD-0085 FOR SPACING TABLES.
2. SEE AD-TD-0085 FOR QUANITY OF LONGITUDIAL TIE-DOWN STRAPS REQUIRED.
3. SEE OTHER DETAILS FOR BLOCKING (PIER) QUANTITY AND OTHER REQUIREMENTS.
4. SEE FULL ADDENDUM FOR ADDITIONAL REQUIREMENTS.
5. ZONE 2/EXPOSURE 'C': 44" MAXIMUM HEIGHT
   ZONE 2/EXPOSURE 'D': 28" MAXIMUM HEIGHT
   ZONE 3/EXPOSURE 'C': 44" MAXIMUM HEIGHT
   ZONE 3/EXPOSURE 'D': 35" MAXIMUM HEIGHT
6. ALL SPECIFICATIONS ARE BASED ON 20° ROOF ANGLE MAX. AND 108" MAX. SIDEWALL HEIGHT.

JACOBSEN HOMES
P.O. BOX 368
SAFETY HARBOR, FLORIDA 34695
PHONE (727) 726-1138

NOTICE:
THESE SPECIFICATIONS AND DRAWINGS ARE ORIGINAL, PROPRIETARY, AND CONFIDENTIAL MATERIALS OF JACOBSEN MANUFACTURING INC. SUCH MATERIALS ARE PROVIDED TO THE RECIPIENT FOR SPECIFIC PURPOSES AND MUST BE KEPT CONFIDENTIAL AND SECRET FROM OTHERS.

DRAWN BY: R.R.	DATE: 11-28-06	REV. LETTER:	
DRAWING TITLE: FIGURES 10.0 AND 10.1			
DRAWING NUMBER: AD-TD-0086			

ADDENDUM

SHEARWALL TIE-DOWN/PIER REQUIREMENTS

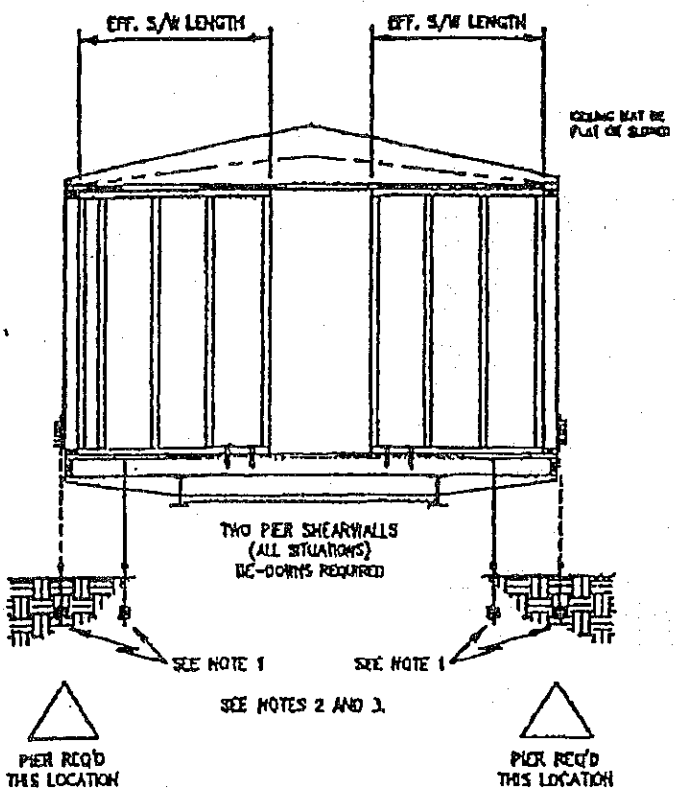

FIGURE 8.0

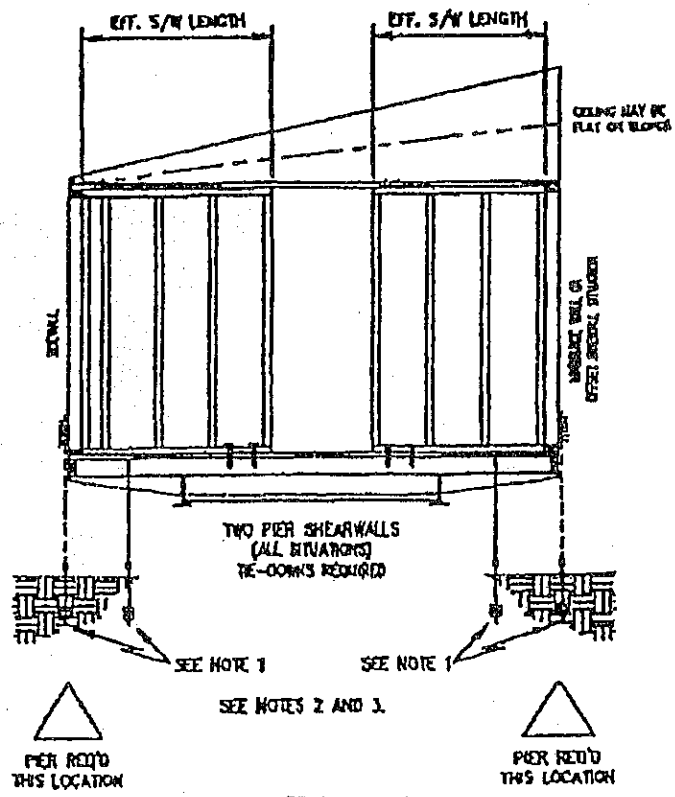

FIGURE 8.1

THE DETAIL ABOVE IS SHOWN WITH A TWO PIER SHEARWALL CONFIGURATION, HOWEVER, THIS DETAIL APPLIES TO ALL SHEARWALL CONFIGURATIONS, ALL ZONES, AND ALL PLF VALUES.

2/3/00

NOTES:

1. TIE-DOWNS REQUIRED IN THESE AREAS. TIE-DOWN STRAP MAY BE LOCATED IN EITHER OF THE AREAS SHOWN ABOVE (NOT REQUIRED AT BOTH). GROUND ANCHORS TO BE RATED FOR AN ULTIMATE LOAD OF 4725# [3150 DESIGN LOAD] (SEE AD-TD-0001 [TD-GENERAL NOTES] FOR NOTES ON GROUND ANCHOR INSTALLATION.)
2. INSTALL A PIER AT EACH END OF THE SHEARWALL JOISTS (PER THE ABOVE DETAILS). [PIER REQUIRED AT EACH END OF JOISTS REGARDLESS OF TIE-DOWN STRAP REQUIREMENTS]
3. WHEN SHEARWALL IS LOCATED ABOVE A SOLID HEADER (FULL HEIGHT CROSS-MEMBER) NO TIE-DOWN STRAPS OR PIERS ARE REQUIRED (ALL SHEARWALL CONFIGURATIONS, ALL ZONES AND ALL EXPOSURES).

ENGINEER APPROVAL: GARY [illegible] REGISTERED No. 910334 STATE OF INDIANA PROFESSIONAL ENGINEER

HUD APPROVAL: APPROVED BY NTA INC. FEB 10 2000 FEDERAL MANUFACTURED HOME CONSTRUCTION AND SAFETY STANDARDS

JACOBSEN HOMES
P.O. BOX 368
SAFETY HARBOR, FLORIDA 34695
PHONE (727) 726-1138

NOTICE: THESE SPECIFICATIONS AND DRAWINGS ARE ORIGINAL, PROPRIETARY, AND CONFIDENTIAL MATERIALS OF JACOBSEN MANUFACTURING INC. SUCH MATERIALS ARE PROVIDED TO THE RECIPIENT FOR SPECIFIC PURPOSES AND MUST BE KEPT CONFIDENTIAL AND SECRET FROM OTHERS.

DRAWN BY: R.R.
DATE: 02-01-00
DRAWING TITLE: S/W TIE/PIER REQ.
DRAWING NUMBER: AD-TD-100
REV. LETTER: B

ADDENDUM
DOUBLE SHEARWALL CONFIGURATION
SINGLE-SECTION TIE-DOWNS

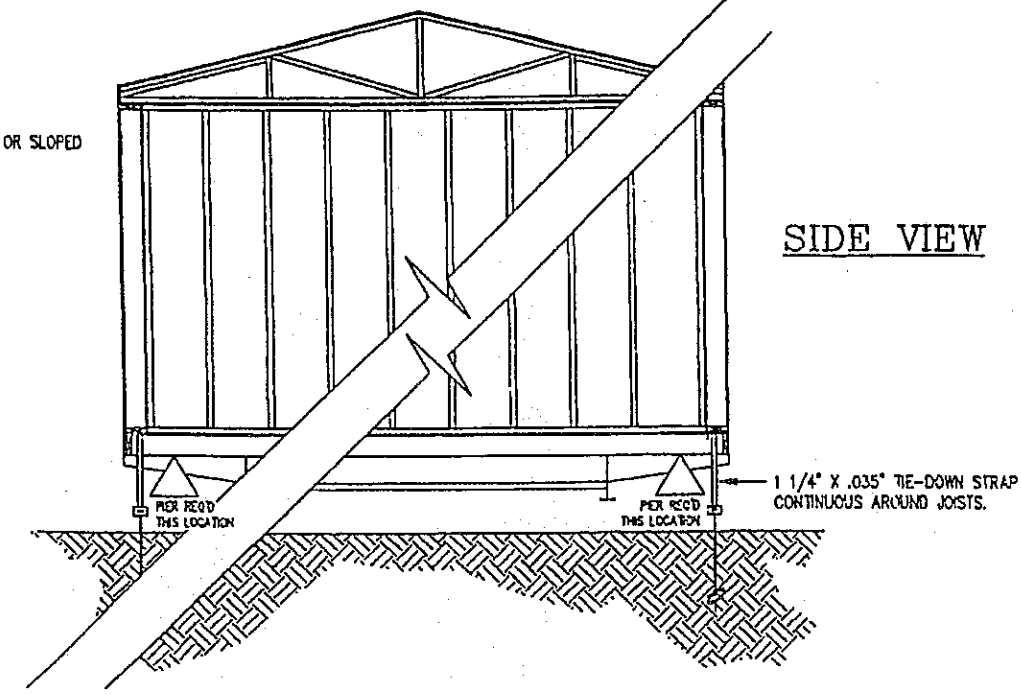

SIDE VIEW

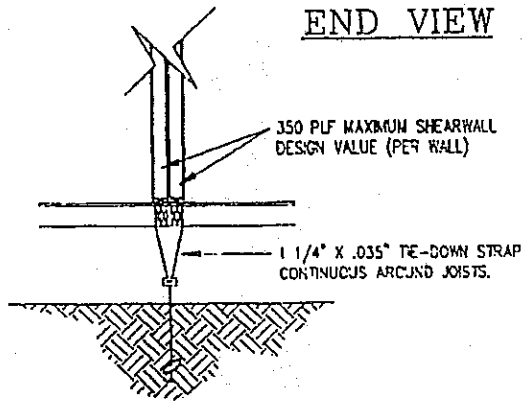

END VIEW

2/7/96

NOTES:

1. GROUND ANCHORS TO BE RATED FOR AN ULTIMATE LOAD OF 4725# [3150 DESIGN LOAD] (SEE AD-TD-0201 [TD-GENERAL NOTES] FOR NOTES ON GROUND ANCHOR INSTALLATION.)
2. INSTALL A PIER AT EACH END OF THE SHEARWALL JOISTS (PER THE ABOVE DETAILS).
3. WHEN SHEARWALL IS LOCATED ABOVE A SOLID HEADER (FULL HEIGHT CROSS-MEMBER) NO TIE-DOWN STRAPS OR PIERS ARE REQUIRED (ALL SHEARWALL CONFIGURATIONS, ALL ZONES AND ALL EXPOSURES).
4. TIE-DOWN STRAP REQUIRED AT EACH END OF JOISTS, ALL DBL. S/W CONFIGURATIONS.
5. CEILING SHOWN FLAT - OPT. CATHEDRAL OR SLOPED CEILING MAY BE USED.
6. FULL WIDTH SHEARWALLS ARE SHOWN IN THE DETAIL ABOVE, HOWEVER, ANY LENGTH OR CONFIGURATION SHEARWALL MAY BE USED.

ENGINEER APPROVAL: JOHN E. DOEDEN 71 PROFESSIONAL ENGINEER

DAPIA APPROVAL: APPROVED BY 1 1996 NTA INC. FEDERAL MANUFACTURED HOME CONSTRUCTION AND SAFETY STANDARDS

JACOBSEN HOMES
P.O. BOX 368
SAFETY HARBOR, FLORIDA 34695
PHONE (813) 726-1138

NOTICE:
THESE SPECIFICATIONS AND DRAWINGS ARE ORIGINAL, PROPRIETARY, AND CONFIDENTIAL MATERIALS OF JACOBSEN MANUFACTURING INC. SUCH MATERIALS ARE PROVIDED TO THE RECIPIENT FOR SPECIFIC PURPOSES AND MUST BE KEPT CONFIDENTIAL AND SECRET FROM OTHERS.

DRAWN BY: R.R	DATE: 2-6-96	REV. LETTER:
DRAWING TITLE: DBL. S/W CONFIG. TIE-DOWN		
DRAWING NUMBER: AD-TD-0110		

DOUBLE SHEARWALL CONFIGURATION
TRIPLE & MULTI SECTIONS

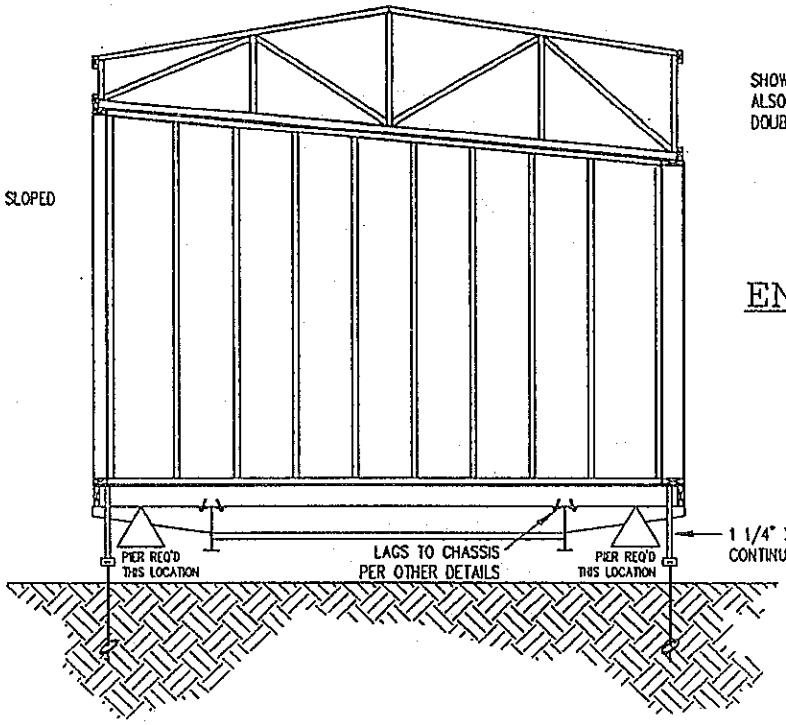

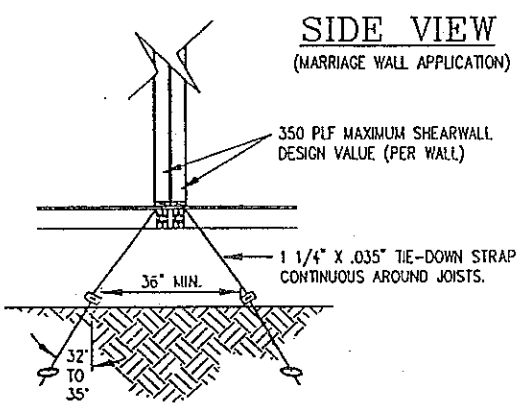

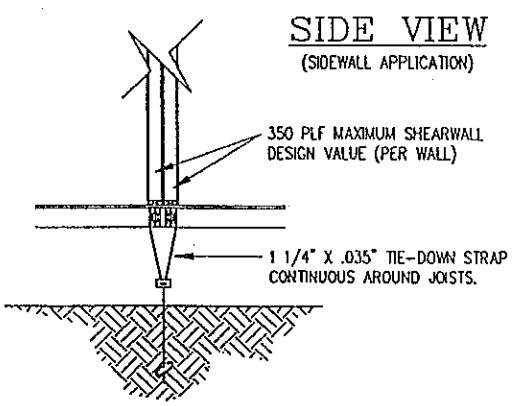

NOTE:
ALSO APPLICABLE TO 'SLIP SIDE' MARRIAGE WALLS WHEN AT LEAST 2 STANDARD VERTICAL TIES ARE INSTALLED, (1 EACH SIDE ADJACENT TO SHEARWALL LOCATION)

NOTES:

1. GROUND ANCHORS TO BE RATED FOR AN ULTIMATE LOAD OF 4725# [3150 DESIGN LOAD] (SEE AD-TD-0001 [TD-GENERAL NOTES] FOR NOTES ON GROUND ANCHOR INSTALLATION.)
2. INSTALL A PIER AT EACH END OF THE SHEARWALL JOISTS (PER THE ABOVE DETAILS).
3. WHEN SHEARWALL IS LOCATED ABOVE A SOLID HEADER (FULL HEIGHT CROSS-MEMBER) NO TIE-DOWN STRAPS OR PIERS ARE REQUIRED (ALL SHEARWALL CONFIGURATIONS, ALL ZONES AND ALL EXPOSURES).
4. TIE-DOWN STRAP REQUIRED AT EACH END OF JOISTS, ALL DBL. S/W CONFIGURATIONS.
5. CEILING SHOWN CATHEDRAL OR SLOPED, FLAT CEILING MAY BE USED.
6. FULL WIDTH SHEARWALLS ARE SHOWN IN THE DETAIL ABOVE, HOWEVER, ANY LENGTH OR CONFIGURATION SHEARWALL MAY BE USED.
7. THIS DETAIL MAY APPLY TO TRIPLE AND/OR DOUBLE WIDE SECTIONS.

ENGINEER APPROVAL:

4/10/96
John C. Doeden, P.E.
15133 C. R. 22
Goshen, IN 46526

DAPIA APPROVAL:

APPROVED BY NTA INC. APR 15 1996
FEDERAL MANUFACTURED HOME CONSTRUCTION AND SAFETY STANDARDS

JACOBSEN HOMES
P.O. BOX 368
SAFETY HARBOR, FLORIDA 34695
PHONE (813) 726-1138

NOTICE:
THESE SPECIFICATIONS AND DRAWINGS ARE ORIGINAL, PROPRIETARY, AND CONFIDENTIAL MATERIALS OF JACOBSEN MANUFACTURING INC. SUCH MATERIALS ARE PROVIDED TO THE RECIPIENT FOR SPECIFIC PURPOSES AND MUST BE KEPT CONFIDENTIAL AND SECRET FROM OTHERS.

DRAWN BY: R.R.	DATE: 4-09-96	REV. LETTER: A
DRAWING TITLE: DBL. S/W CONFIG. TIE-DOWN		
DRAWING NUMBER: AD-TD-0111		

PORCH ANCHORING

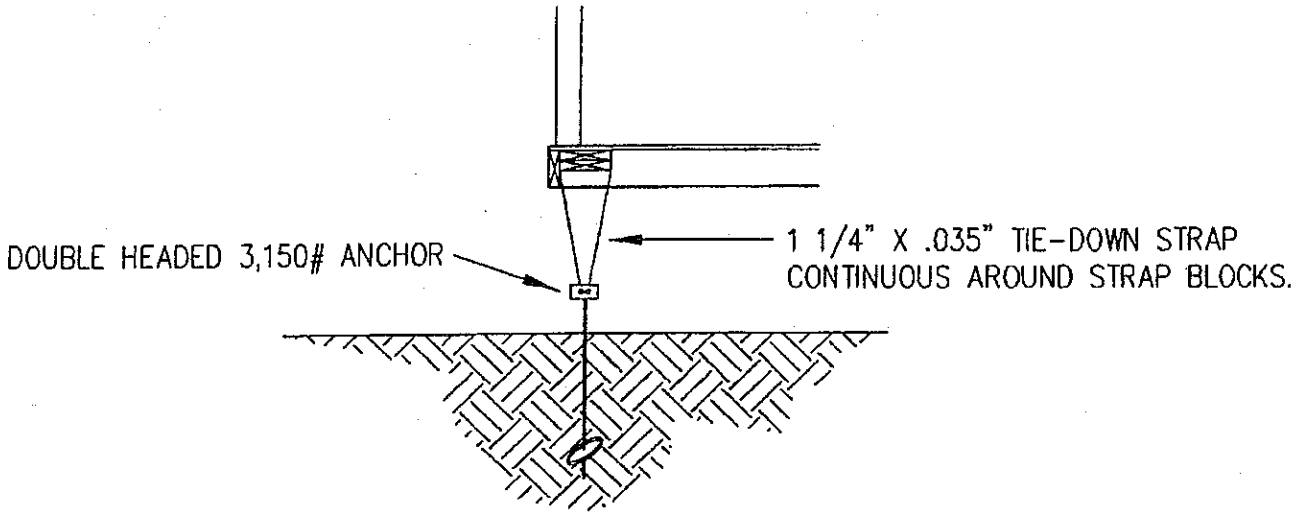

WINDZONE III
EXPOSURE C
(110 MPH)
20 PSF ROOF
10 PSF D.L.

REF. CALCS. CWA-108.01-108.07

NOTES:

1. SEE SET-UP MANUAL AND ADDENDUM FOR APPLICABLE BLOCKING

ENGINEER APPROVAL: 12/12/03

DAPIA APPROVAL:
APPROVED BY
NIA INC.
FEDERAL MANUFACTURED HOME CONSTRUCTION AND SAFETY STANDARDS
DEC 18 2003

JACOBSEN HOMES
P.O. BOX 368
SAFETY HARBOR, FLORIDA 34695
PHONE (727) 726-1138

NOTICE:
THESE SPECIFICATIONS AND DRAWINGS ARE ORIGINAL, PROPRIETARY, AND CONFIDENTIAL MATERIALS OF JACOBSEN MANUFACTURING INC. SUCH MATERIALS ARE PROVIDED TO THE RECIPIENT FOR SPECIFIC PURPOSES AND MUST BE KEPT CONFIDENTIAL AND SECRET FROM OTHERS.

DRAWN BY: M.T.	DATE: 12-13-03	REV. LETTER: —
DRAWING TITLE: PORCH ANCHORING		
DRAWING NUMBER: AD-TD-0112		

ADDENDUM

ALTERNATE VERTICAL TIE-DOWN APPLICATION

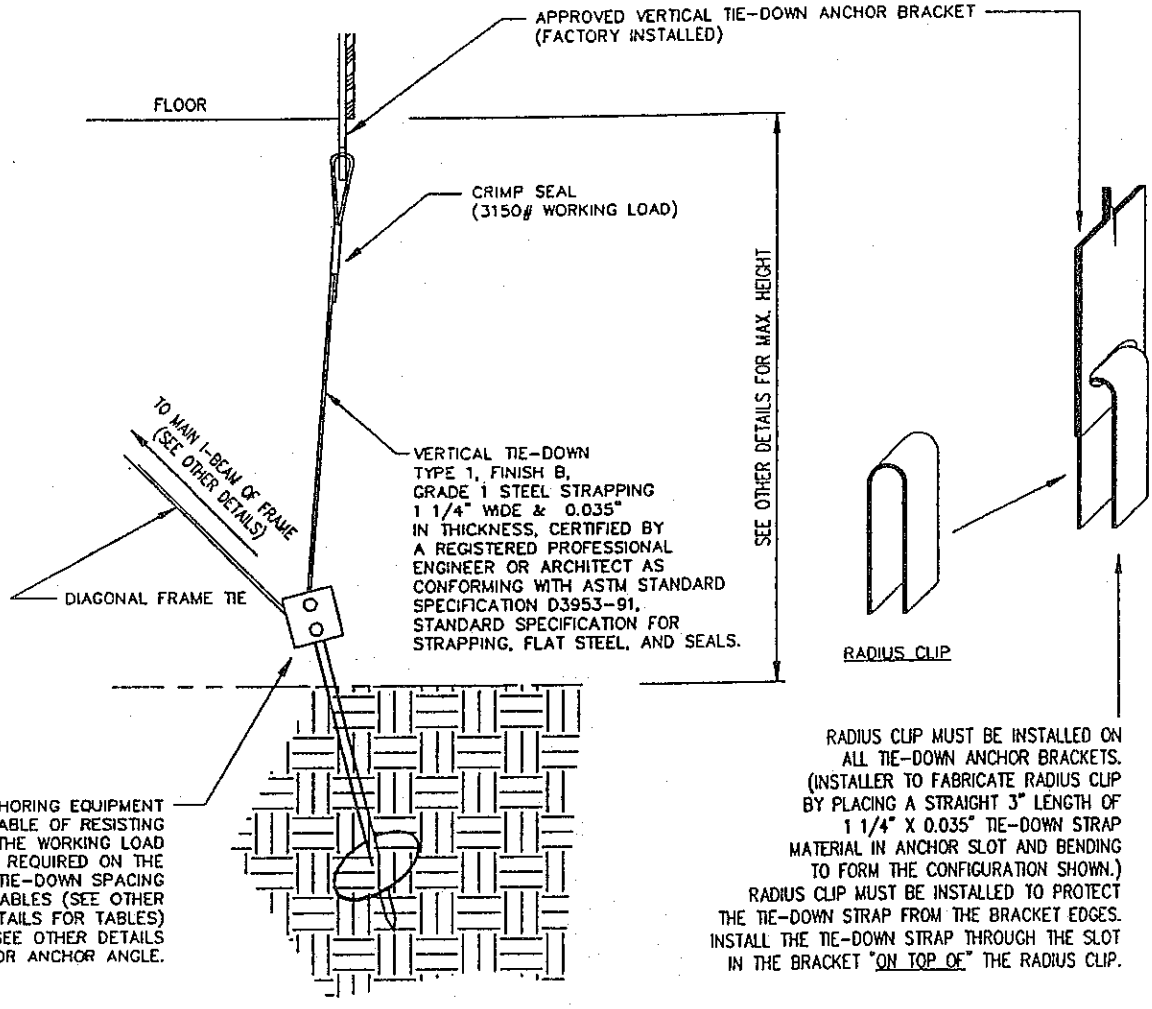

NOTES:

1. ALL VERTICAL TIE-DOWN STRAPS, DIAGONAL FRAME TIE-DOWN STRAPS AND ANCHORING EQUIPMENT SUPPLIED BY AND INSTALLED BY OTHERS- ON SITE.
2. ANCHORING EQUIPMENT EXPOSED TO WEATHERING SHALL HAVE A RESISTANCE TO WEATHER DETERIORATION.
3. PROTECTION SHALL BE PROVIDED AT SHARP CORNERS WHERE THE ANCHORING SYSTEM REQUIRES THE USE OF EXTERNAL STRAPS OR CABLES (SEE RADIUS CLIP).

ENGINEER APPROVAL:

JOHN C. DOEDEN REGISTERED No. ENE8703571 STATE OF INDIANA PROFESSIONAL ENGINEER 6/4/95

ANCHOR BRACKET AND TIE-DOWN DEVICES ARE CERTIFIED BY OTHERS

DAPIA APPROVAL:

APPROVED BY Rev JUN 1 5 1995

NTA INC. FEDERAL MANUFACTURED HOME CONSTRUCTION AND SAFETY STANDARDS

JACOBSEN HOMES
P.O. BOX 368
SAFETY HARBOR, FLORIDA 34695
PHONE (813) 726-1138

NOTICE:
THESE SPECIFICATIONS AND DRAWINGS ARE ORIGINAL, PROPRIETARY, AND CONFIDENTIAL MATERIALS OF JACOBSEN MANUFACTURING INC. SUCH MATERIALS ARE PROVIDED TO THE RECIPIENT FOR SPECIFIC PURPOSES AND MUST BE KEPT CONFIDENTIAL AND SECRET FROM OTHERS.

DRAWN BY: C.L.Y.	DATE: 5-31-95	REV. LETTER: A
DRAWING TITLE: ALT. TIE-DOWN APPL.		
DRAWING NUMBER: AD-TD-0200		

ADDENDUM

ALTERNATE VERTICAL TIE-DOWN APPLICATION

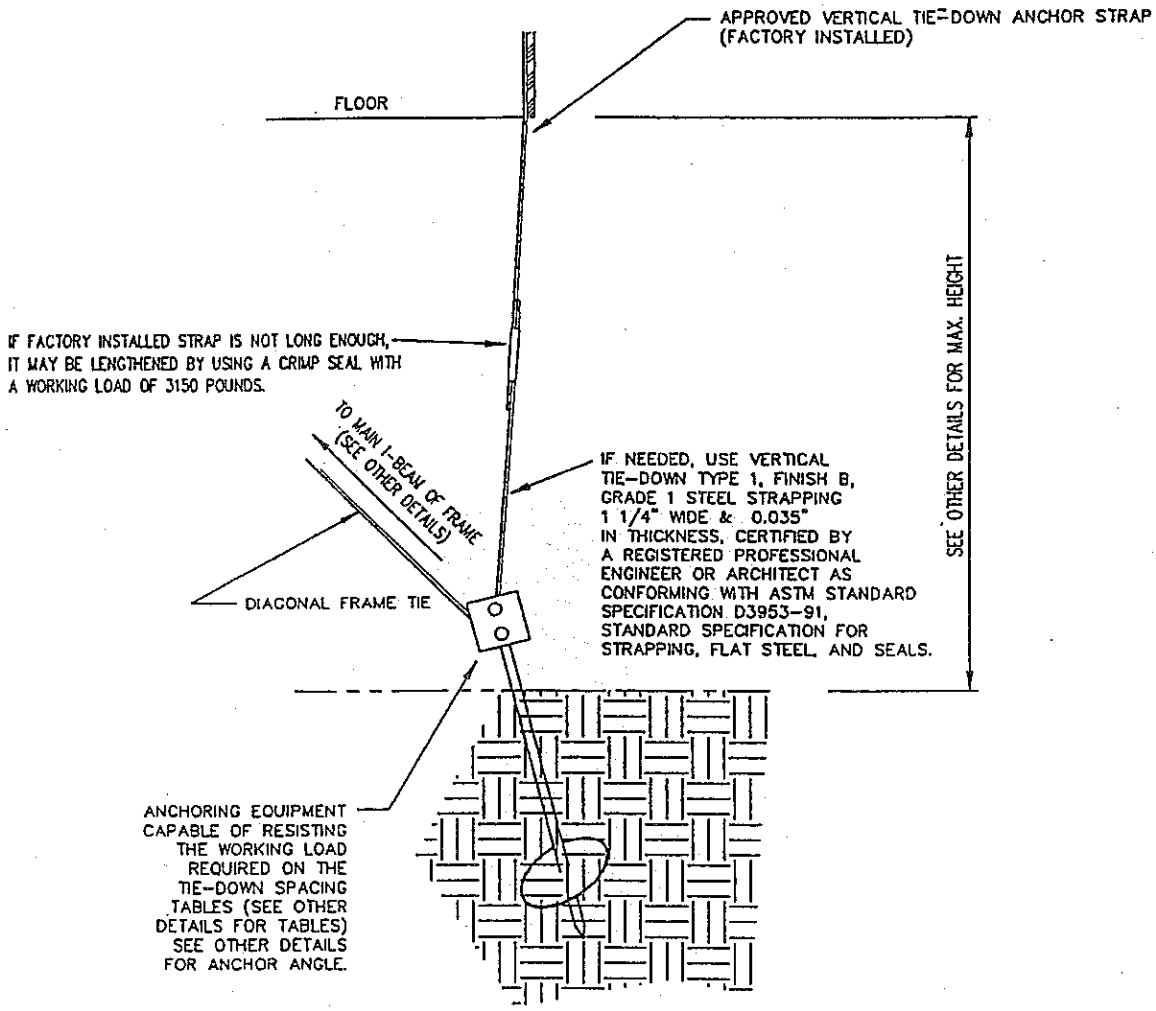

NOTES:

1. ANY ADDITIONAL VERTICAL TIE-DOWN STRAPS, DIAGONAL FRAME TIE-DOWN STRAPS AND ANCHORING EQUIPMENT SUPPLIED BY AND INSTALLED BY OTHERS- ON SITE.
2. ANCHORING EQUIPMENT EXPOSED TO WEATHERING SHALL HAVE A RESISTANCE TO WEATHER DETERIORATION.
3. PROTECTION SHALL BE PROVIDED AT SHARP CORNERS WHERE THE ANCHORING SYSTEM REQUIRES THE USE OF EXTERNAL STRAPS OR CABLES (SEE RADIUS CLIP).

ENGINEER APPROVAL:

GARY L. STILWELL REGISTERED No. 910334 STATE OF INDIANA PROFESSIONAL ENGINEER

DAPIA APPROVAL:

APPROVED BY NTA INC. FEDERAL MANUFACTURED HOME CONSTRUCTION AND SAFETY STANDARDS

REVISED 10/23/96

JACOBSEN HOMES

P.O. BOX 368
SAFETY HARBOR, FLORIDA 34695
PHONE (813) 726-1138

NOTICE:
THESE SPECIFICATIONS AND DRAWINGS ARE ORIGINAL, PROPRIETARY, AND CONFIDENTIAL MATERIALS OF JACOBSEN MANUFACTURING INC. SUCH MATERIALS ARE PROVIDED TO THE RECIPIENT FOR SPECIFIC PURPOSES AND MUST BE KEPT CONFIDENTIAL AND SECRET FROM OTHERS.

DRAWN BY: R.R.	DATE: 10-05-96	REV. LETTER: A
DRAWING TITLE: ALT. TIE-DOWN APPL.		
DRAWING NUMBER: AD-TD-0210		

ADDENDUM

COLUMN TIE-DOWN APPLICATION

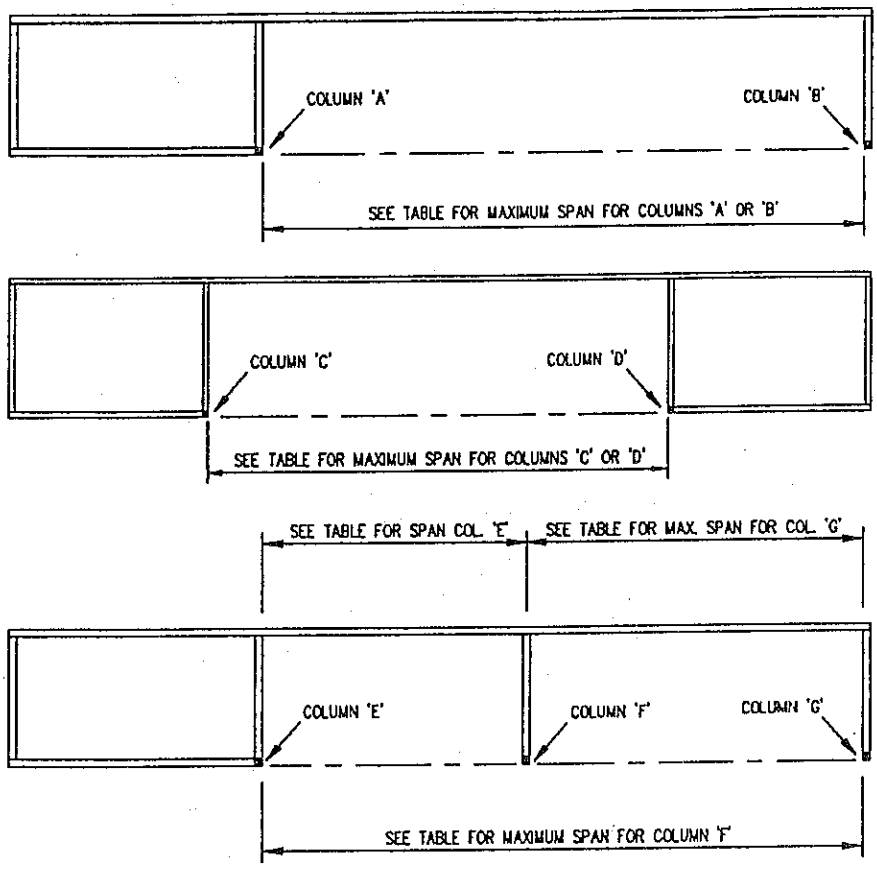

TYPE OF ANCHORING REQ'D (SEE AD-TD-0251, AD-TD-0252 AND AD-TD-0253) SEE NOTE 1	MAXIMUM ALLOWABLE SPAN											
	COLUMNS 'A', 'C', 'D' OR 'E'				COLUMNS 'B' OR 'G'				COLUMN 'F'			
	ZONE 2		ZONE 3		ZONE 2		ZONE 3		ZONE 2		ZONE 3	
	EXP. 'C'	EXP. 'D'	EXP. 'C'	EXP. 'D'	EXP. 'C'	EXP. 'D'	EXP. 'C'	EXP. 'D'	EXP. 'C'	EXP. 'D'	EXP. 'C'	EXP. 'D'
2 - 3150# ANCHORS	43'-0"	29'-6"	33'-9"	23'-7"	43'-0"	29'-6"	33'-9"	23'-7"	43'-0"	29'-6"	33'-9"	23'-7"
1 - 3150# ANCHOR	21'-6"	14'-9"	16'-10"	11'-10"	21'-6"	14'-9"	16'-10"	11'-10"	21'-6"	14'-9"	16'-10"	11'-10"
1 - 4000# ANCHOR	27'-3"	18'-9"	21'-5"	15'-0"	27'-3"	18'-9"	21'-5"	15'-0"	27'-3"	18'-9"	21'-5"	15'-0"

NOTES:

1. SEE AD-TD-0251, AD-TD-0252 AND AD-TD-0253 FOR SPECIFIC INFO. ON ANCHORS.
2. SEE AD-TD-0001 FOR ADDITIONAL NOTES ON ANCHOR INSTALLATION.

ENGINEER APPROVAL:

6/4/95

John C. Doeden, P.E.
15133 C. R. 22
Goshen, IN 46526

DAPIA APPROVAL:
APPROVED BY
JUN 1 5 1995
NTA INC.
FEDERAL MANUFACTURED HOME CONSTRUCTION AND SAFETY STANDARDS

JACOBSEN HOMES
P.O. BOX 368
SAFETY HARBOR, FLORIDA 34695
PHONE (813) 726-1138

NOTICE:
THESE SPECIFICATIONS AND DRAWINGS ARE ORIGINAL, PROPRIETARY, AND CONFIDENTIAL MATERIALS OF JACOBSEN MANUFACTURING INC. SUCH MATERIALS ARE PROVIDED TO THE RECIPIENT FOR SPECIFIC PURPOSES AND MUST BE KEPT CONFIDENTIAL AND SECRET FROM OTHERS.

DRAWN BY: C.L.Y.	DATE: 5-31-95	REV. LETTER:
DRAWING TITLE: COL. TIE-DOWN APPL.		A
DRAWING NUMBER: AD-TD-0250		

ADDENDUM

COLUMN TIE-DOWN APPLICATION

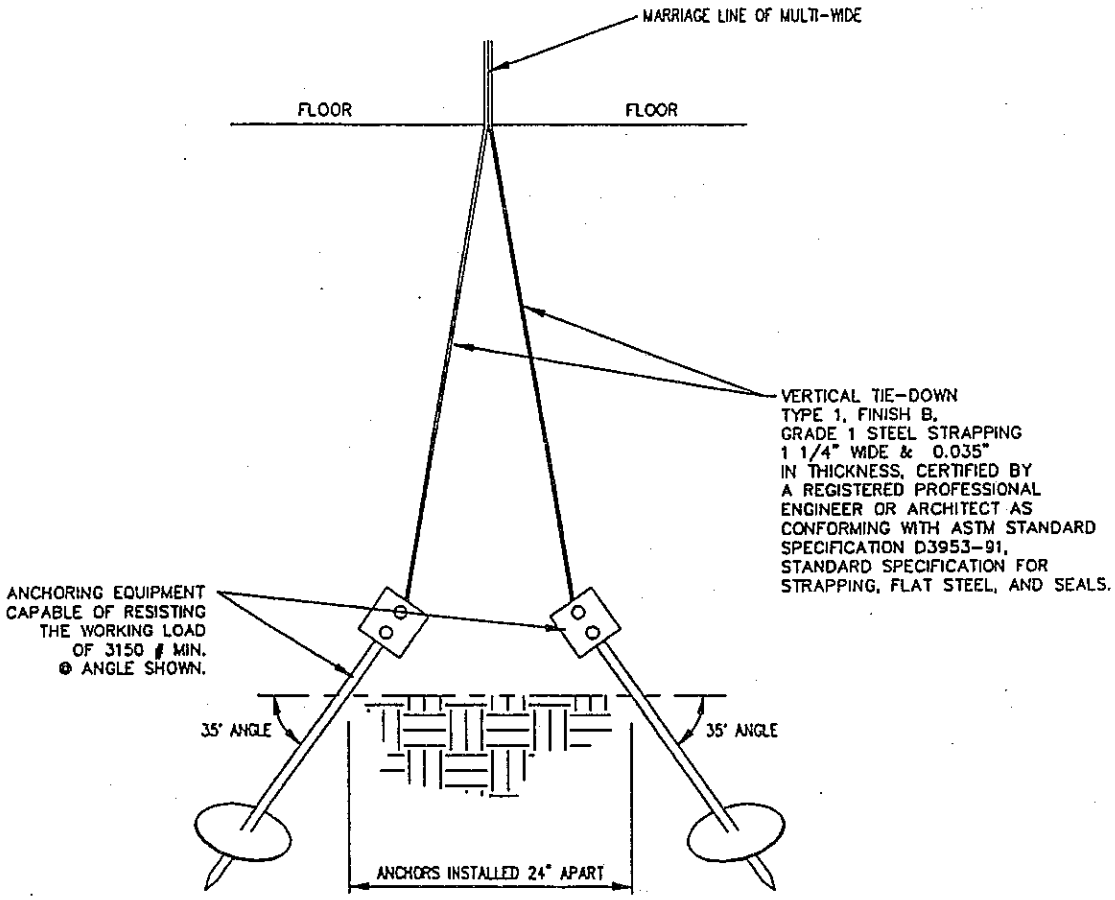

COLUMN STRAPS ATTACHED TO TWO SEPERATE GROUND ANCHORS (3150# EA.)

NOTES:

1. ALL ANCHORING EQUIPMENT SUPPLIED BY AND INSTALLED BY OTHERS- ON SITE.
2. ANCHORING EQUIPMENT EXPOSED TO WEATHERING SHALL HAVE A RESISTANCE TO WEATHER DETERIORATION.
3. PROTECTION SHALL BE PROVIDED AT SHARP CORNERS WHERE THE ANCHORING SYSTEM REQUIRES THE USE OF EXTERNAL STRAPS OR CABLES.

ENGINEER APPROVAL: JOHN E. DOEDEN REGISTERED No. ENE8703571 STATE OF INDIANA PROFESSIONAL ENGINEER 6/9/95

DAPIA APPROVAL: APPROVED BY Rev JUN 15 1995 NIA INC. FEDERAL MANUFACTURED HOME CONSTRUCTION AND SAFETY STANDARDS

JACOBSEN HOMES
P.O. BOX 368
SAFETY HARBOR, FLORIDA 34695
PHONE (813) 726-1138

NOTICE: THESE SPECIFICATIONS AND DRAWINGS ARE ORIGINAL, PROPRIETARY, AND CONFIDENTIAL MATERIALS OF JACOBSEN MANUFACTURING INC. SUCH MATERIALS ARE PROVIDED TO THE RECIPIENT FOR SPECIFIC PURPOSES AND MUST BE KEPT CONFIDENTIAL AND SECRET FROM OTHERS.

DRAWN BY:	DATE:	REV. LETTER:
C.L.Y.	5-31-95	A

DRAWING TITLE: COL. TIE-DOWN APPL.

DRAWING NUMBER: AD-TD-0251

ADDENDUM

COLUMN TIE-DOWN APPLICATION

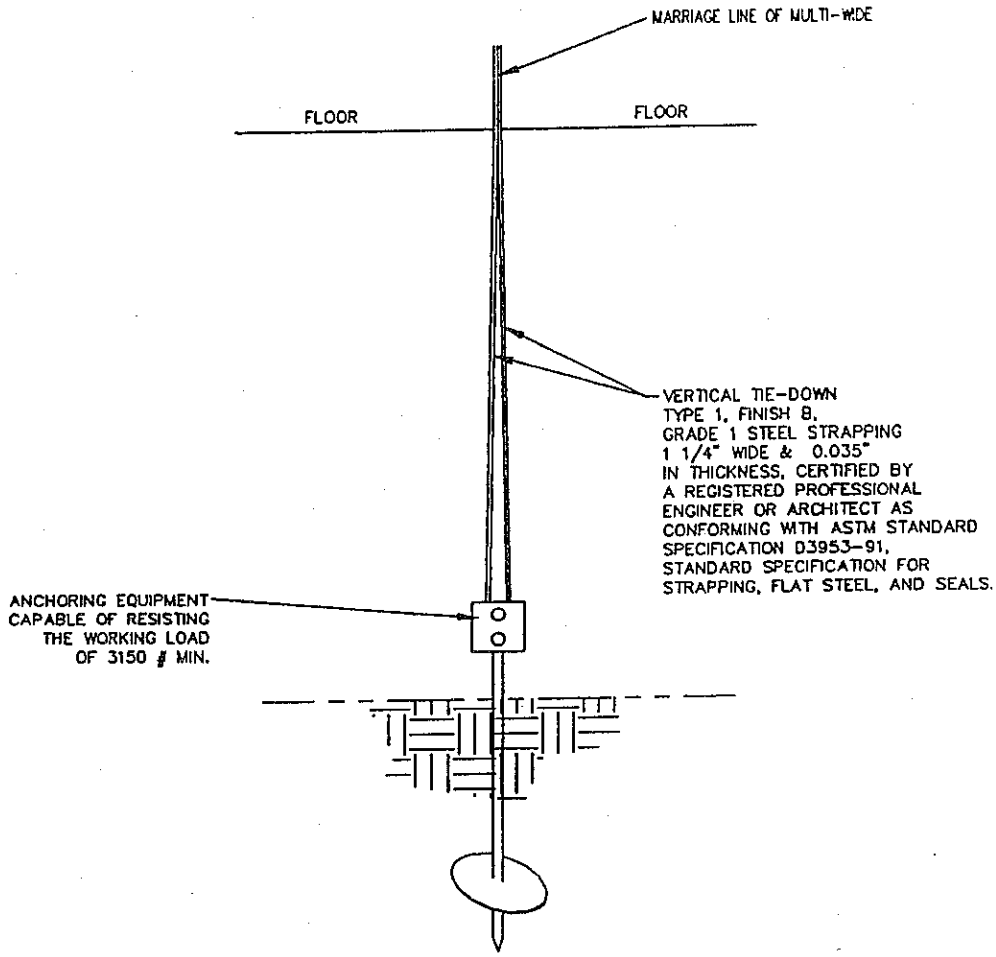

COLUMN STRAPS ATTACHED TO A SINGLE GROUND ANCHOR (3150#)

NOTES:

1. ALL ANCHORING EQUIPMENT SUPPLIED BY AND INSTALLED BY OTHERS-- ON SITE.
2. ANCHORING EQUIPMENT EXPOSED TO WEATHERING SHALL HAVE A RESISTANCE TO WEATHER DETERIORATION.
3. PROTECTION SHALL BE PROVIDED AT SHARP CORNERS WHERE THE ANCHORING SYSTEM REQUIRES THE USE OF EXTERNAL STRAPS OR CABLES.

ENGINEER APPROVAL: JOHN S. DUEDEN REGISTERED No. ENE8703571 STATE OF INDIANA PROFESSIONAL ENGINEER 6/4/95

DAPIA APPROVAL: APPROVED BY Rev JUN 15 1995 NIA INC. FEDERAL MANUFACTURED HOME CONSTRUCTION AND SAFETY STANDARDS

JACOBSEN HOMES
P.O. BOX 368
SAFETY HARBOR, FLORIDA 34695
PHONE (813) 726-1138

NOTICE:
THESE SPECIFICATIONS AND DRAWINGS ARE ORIGINAL, PROPRIETARY, AND CONFIDENTIAL MATERIALS OF JACOBSEN MANUFACTURING INC. SUCH MATERIALS ARE PROVIDED TO THE RECIPIENT FOR SPECIFIC PURPOSES AND MUST BE KEPT CONFIDENTIAL AND SECRET FROM OTHERS.

DRAWN BY: C.L.Y.	DATE: 5-25-95	REV. LETTER:
DRAWING TITLE: COL. TIE-DOWN APPL.		
DRAWING NUMBER: AD-TD-0252		

ADDENDUM

COLUMN TIE-DOWN APPLICATION

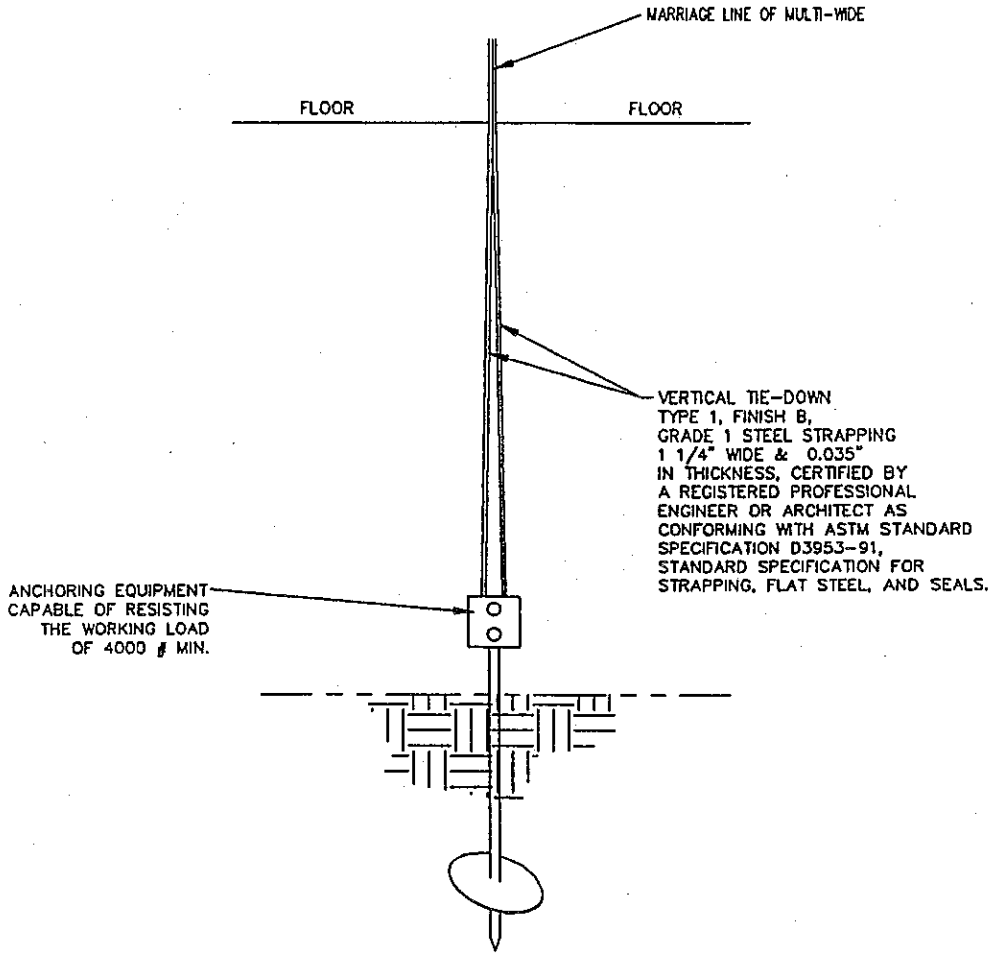

COLUMN STRAPS ATTACHED TO A SINGLE GROUND ANCHOR (4000#)

NOTES:

1. ALL ANCHORING EQUIPMENT SUPPLIED BY AND INSTALLED BY OTHERS- ON SITE.
2. ANCHORING EQUIPMENT EXPOSED TO WEATHERING SHALL HAVE A RESISTANCE TO WEATHER DETERIORATION.
3. PROTECTION SHALL BE PROVIDED AT SHARP CORNERS WHERE THE ANCHORING SYSTEM REQUIRES THE USE OF EXTERNAL STRAPS OR CABLES.

ENGINEER APPROVAL: JOHN C. DOEDEN REGISTERED No. ENE8703571 STATE OF INDIANA PROFESSIONAL ENGINEER 6/4/95

DAPIA APPROVAL: APPROVED BY JUN 15 1995 NTA INC. FEDERAL MANUFACTURED HOME CONSTRUCTION AND SAFETY STANDARDS

JACOBSEN HOMES
P.O. BOX 368
SAFETY HARBOR, FLORIDA 34695
PHONE (813) 726-1138

NOTICE:
THESE SPECIFICATIONS AND DRAWINGS ARE ORIGINAL, PROPRIETARY, AND CONFIDENTIAL MATERIALS OF JACOBSEN MANUFACTURING INC. SUCH MATERIALS ARE PROVIDED TO THE RECIPIENT FOR SPECIFIC PURPOSES AND MUST BE KEPT CONFIDENTIAL AND SECRET FROM OTHERS.

DRAWN BY: C.L.Y.	DATE: 5-25-95	REV. LETTER:
DRAWING TITLE: COL. TIE-DOWN APPL.		
DRAWING NUMBER: AD-TD-0253		

ADDENDUM

184" WIDE COLUMN TIE-DOWN APPLICATION

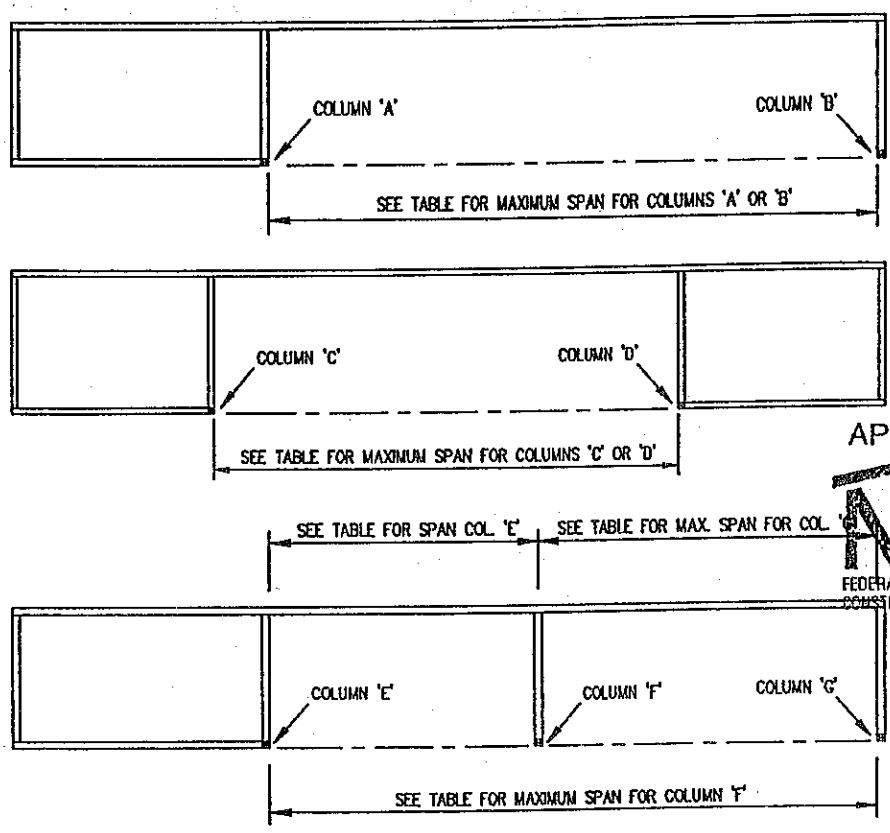

APPROVED BY
NTA INC.
FEDERAL MANUFACTURED HOME CONSTRUCTION AND SAFETY STANDARDS
MAR 03 1999

TYPE OF ANCHORING REQ'D (SEE AD-TD-0251, AD-TD-0252 AND AD-TD-0253) SEE NOTE 1	MAXIMUM ALLOWABLE SPAN											
	COLUMNS 'A', 'C', 'D' OR 'E'				COLUMNS 'B' OR 'G'				COLUMN 'F'			
	ZONE 2		ZONE 3		ZONE 2		ZONE 3		ZONE 2		ZONE 3	
	EXP. 'C'	EXP. 'D'	EXP. 'C'	EXP. 'D'	EXP. 'C'	EXP. 'D'	EXP. 'C'	EXP. 'D'	EXP. 'C'	EXP. 'D'	EXP. 'C'	EXP. 'D'
2 - 3150# ANCHORS	37'-4"	25'-6"	29'-4"	20'-4"	37'-4"	25'-6"	29'-4"	20'-4"	37'-4"	25'-6"	29'-4"	20'-4"
1 - 3150# ANCHOR	18'-6"	12'-10"	14'-7"	10'-3"	18'-6"	12'-10"	14'-7"	10'-3"	18'-6"	12'-10"	14'-7"	10'-3"
1 - 4000# ANCHOR	23'-8"	16'-4"	18'-7"	13'-0"	23'-8"	16'-4"	18'-7"	13'-0"	23'-8"	16'-4"	18'-7"	13'-0"

REF. CALCS. CWA - 93.01

ENGINEER APPROVAL: GARY L. STILWELL REGISTERED No. 910334 STATE OF INDIANA PROFESSIONAL ENGINEER

DAPIA APPROVAL: MAR 03 1999

APPROVED BY
NTA INC.
FEDERAL MANUFACTURED HOME CONSTRUCTION AND SAFETY STANDARDS

NOTES:

1. SEE AD-TD-0251, AD-TD-0252 AND AD-TD-0253 FOR SPECIFIC INFO. ON ANCHORS.
2. SEE AD-TD-0001 FOR ADDITIONAL NOTES ON ANCHOR INSTALLATION.

JACOBSEN HOMES
P.O. BOX 368
SAFETY HARBOR, FLORIDA 34695
PHONE (727) 726-1138

NOTICE: THESE SPECIFICATIONS AND DRAWINGS ARE ORIGINAL, PROPRIETARY, AND CONFIDENTIAL MATERIALS OF JACOBSEN MANUFACTURING INC. SUCH MATERIALS ARE PROVIDED TO THE RECIPIENT FOR SPECIFIC PURPOSES AND MUST BE KEPT CONFIDENTIAL AND SECRET FROM OTHERS.

DRAWN BY: M.T.	DATE: 2-9-99	REV. LETTER: —
DRAWING TITLE: 184" WIDE COL. TIE-DOWN APPL.		
DRAWING NUMBER: AD-TD-0254		

ADDENDUM

TYPICAL SINGLE WIDE TIE-DOWN PLACEMENT

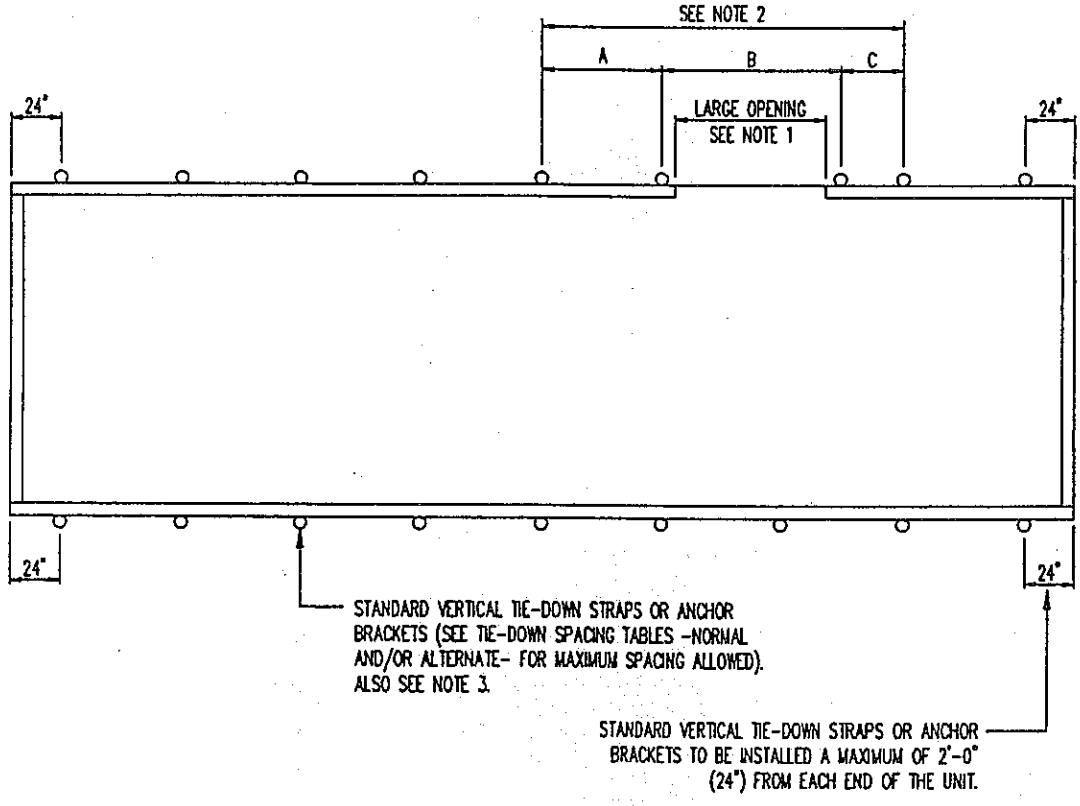

NOTES:

1. LARGE OPENING = ANY OPENING WIDER THAN MAX. TIE-DOWN SPACING ALLOWED.
2. VERTICAL TIE-DOWNS MAY EXCEED THE STANDARD VERTICAL TIE-DOWN SPACING, SO LONG AS, THE AVERAGE SPACING [(A+B+C) / 3] DOES NOT EXCEED THE MAXIMUM TIE-DOWN SPACING REQUIRED ON THE APPROPRIATE VERTICAL/FRAME TIE-DOWN SPACING TABLES (SEE OTHER DETAILS).
3. INSTALL FRAME TIES AT ALL VERTICAL TIE-DOWN LOCATIONS.
4. SEE AD-TD-0001 FOR ADDITIONAL REQUIREMENTS.

ENGINEER APPROVAL:

JOHN C. DOEDEN REGISTERED ENE8703571 STATE OF INDIANA 16474 PROFESSIONAL ENGINEER

ANCHOR BRACKET AND TIE-DOWN DEVICES ARE CERTIFIED BY OTHERS

DAPIA APPROVAL:

APPROVED BY NTA INC. JUN 15 1995

JACOBSEN HOMES

P.O. BOX 368
SAFETY HARBOR, FLORIDA 34695
PHONE (813) 726-1138

NOTICE:
THESE SPECIFICATIONS AND DRAWINGS ARE ORIGINAL, PROPRIETARY, AND CONFIDENTIAL MATERIALS OF JACOBSEN MANUFACTURING INC. SUCH MATERIALS ARE PROVIDED TO THE RECIPIENT FOR SPECIFIC PURPOSES AND MUST BE KEPT CONFIDENTIAL AND SECRET FROM OTHERS.

DRAWN BY: C.L.Y.	DATE: 5-31-95	REV. LETTER: A
DRAWING TITLE: TYP. SINGLE WIDE T/D		
DRAWING NUMBER: AD-TD-0300		

ADDENDUM

TYPICAL MULTI-WIDE TIE-DOWN PLACEMENT

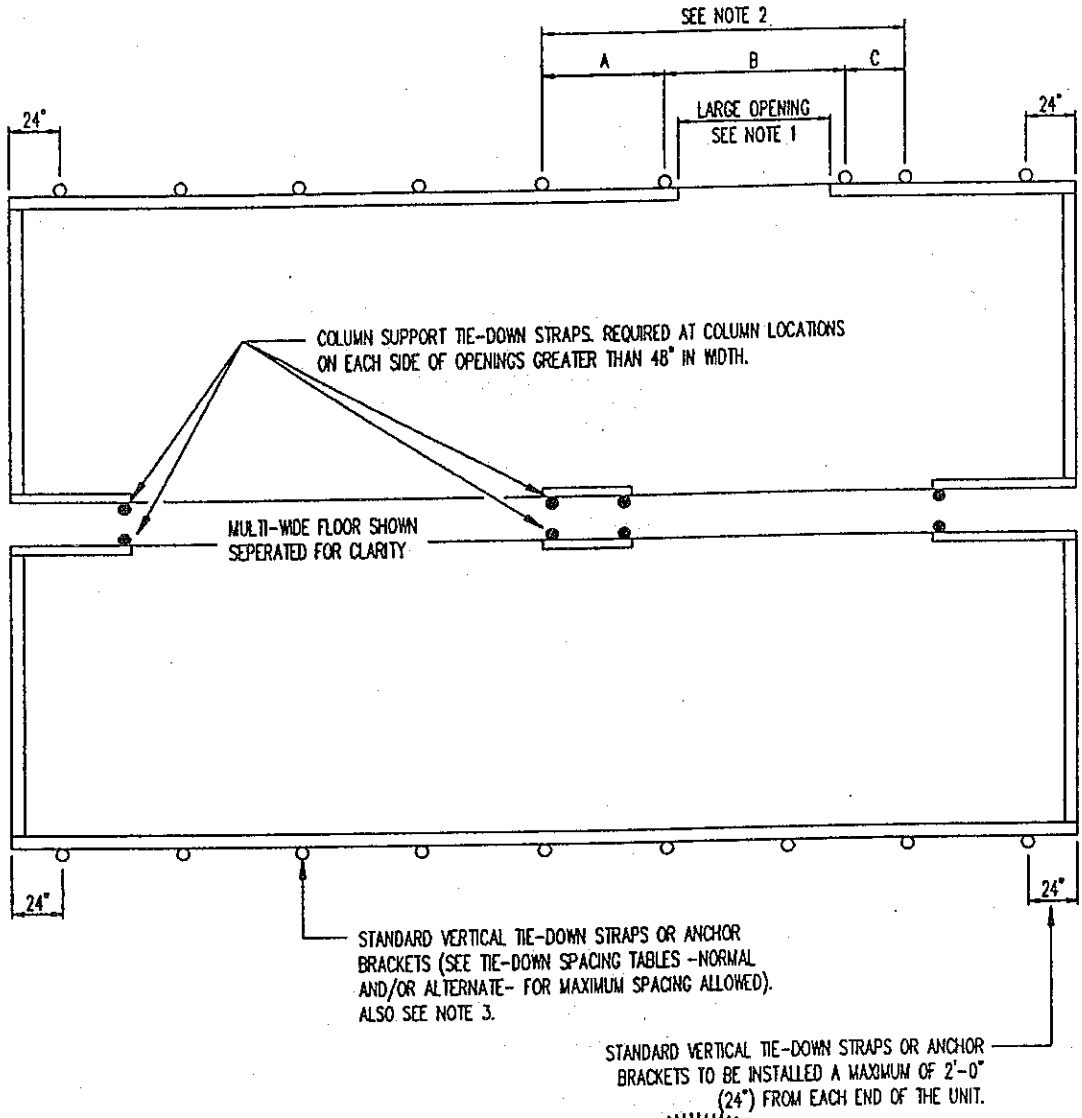

FOR TRIPLE WIDE AND LARGER UNIT DESIGNS, INSTALL ALL TIE-DOWN STRAPS AS SHOWN IN THIS DETAIL.

NOTES:

1. LARGE OPENING = ANY OPENING WIDER THAN MAX. TIE-DOWN SPACING ALLOWED.
2. VERTICAL TIE-DOWNS MAY EXCEED THE STANDARD VERTICAL TIE-DOWN SPACING, SO LONG AS, THE AVERAGE SPACING [(A+B+C) / 3] DOES NOT EXCEED THE MAXIMUM TIE-DOWN SPACING REQUIRED ON THE APPROPRIATE VERTICAL/FRAME TIE-DOWN SPACING TABLES (SEE OTHER DETAILS).
3. INSTALL FRAME TIES AT ALL VERTICAL TIE-DOWN LOCATIONS.
4. SEE AD-TD-0001 FOR ADDITIONAL REQUIREMENTS.

ENGINEER APPROVAL:
JOHN C. DOEDEN REGISTERED No. ENE8703571 STATE OF INDIANA PROFESSIONAL ENGINEER 6/4/95
ANCHOR BRACKETS AND TIE-DOWN DEVICES ARE CERTIFIED BY OTHERS

DAPIA APPROVAL:
APPROVED BY NTA INC. JUN 15 1995
FEDERAL MANUFACTURED HOME CONSTRUCTION AND SAFETY STANDARDS

JACOBSEN HOMES
P.O. BOX 368
SAFETY HARBOR, FLORIDA 34695
PHONE (813) 726-1138

NOTICE:
THESE SPECIFICATIONS AND DRAWINGS ARE ORIGINAL, PROPRIETARY, AND CONFIDENTIAL MATERIALS OF JACOBSEN MANUFACTURING INC. SUCH MATERIALS ARE PROVIDED TO THE RECIPIENT FOR SPECIFIC PURPOSES AND MUST BE KEPT CONFIDENTIAL AND SECRET FROM OTHERS.

DRAWN BY: C.L.Y.	DATE: 6-1-95	REV. LETTER: A
DRAWING TITLE: TYP. MULTI-WIDE T/D		
DRAWING NUMBER: AD-TD-0310		

ZONE I TIE-DOWNS

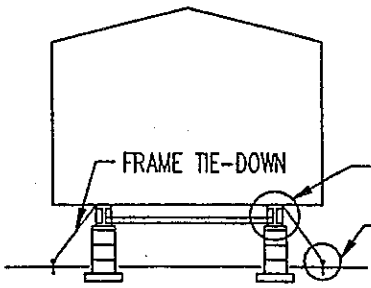

SINGLE WIDE TIE-DOWN

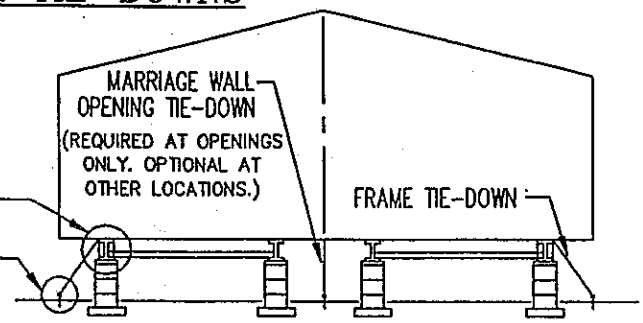

DOUBLE WIDE TIE-DOWN

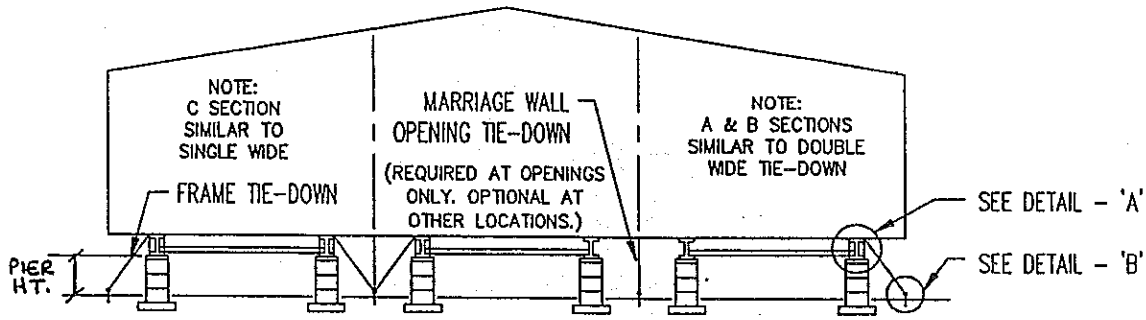

TRIPLE WIDE TIE-DOWN

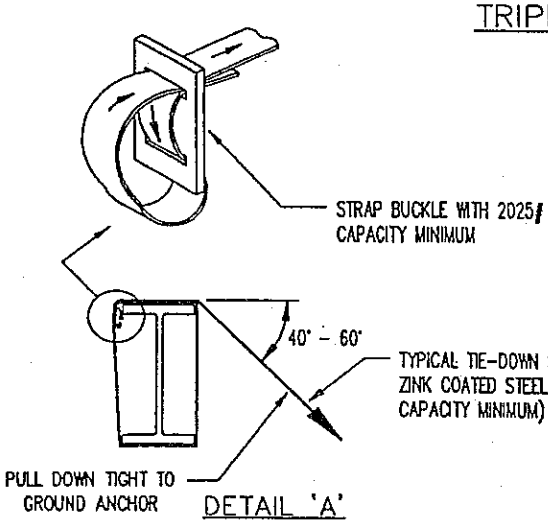

DETAIL 'A'

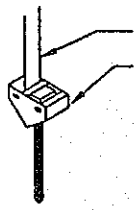

SINGLE HEADED GROUND ANCHOR (WHEN MARRIAGE WALL TIES AND FRAME TIES ARE LOCATED AND SECURED TO THE SAME GROUND ANCHOR, A DOUBLE HEADED GROUND ANCHOR MUST BE USED) ALL GROUND ANCHORS MUST BE LISTED TO CARRY THE LOADING IMPOSED BY THE TIE-DOWN STRAPPING (3150 LBS. MAXIMUM FOR EACH TIE-DOWN STRAP CONNECTED).

DETAIL 'B'

NOTES:

1. SEE DETAIL 'B' PAGE 4 FOR MARRIAGE WALL OPENINGS GREATER THAN 49 INCHES. & UP TO 17'-6" TRIBUTARY SPAN.
2. SEE TIE-DOWN SPACING CHART ON PAGE 2 FOR ANCHOR AND TIE-DOWN PLACEMENT.
3. SEE DETAIL 'A' PAGE FOR TYPICAL I-BEAM PIER CONSTRUCTION.

ENGINEER APPROVAL:

JOHN C. DOEDEN CERTIFICATE No. 0045484 STATE OF FLORIDA REGISTERED ENGINEER

DAPIA APPROVAL:

APPROVED BY NTA INC. DEC 2 1995

FEDERAL MANUFACTURED HOME CONSTRUCTION AND SAFETY STANDARDS

JACOBSEN HOMES

P.O. BOX 368
SAFETY HARBOR, FLORIDA 34695
PHONE (813) 726-1138

NOTICE:
THESE SPECIFICATIONS AND DRAWINGS ARE ORIGINAL, PROPRIETARY, AND CONFIDENTIAL MATERIALS OF JACOBSEN MANUFACTURING INC. SUCH MATERIALS ARE PROVIDED TO THE RECIPIENT FOR SPECIFIC PURPOSES AND MUST BE KEPT CONFIDENTIAL AND SECRET FROM OTHERS.

DRAWN BY:	RR	DATE:	10-31-95	REV. LETTER:
DRAWING TITLE:	ZONE I TIE-DOWNS			
DRAWING NUMBER:	AD-Z1-0001			

ZONE 1 TIE-DOWN SPACING CHART

TIE-DOWN SPACING (MAX. I-BEAM PIER HEIGHT 33")*				
SECTION WIDTH	I-BEAM SPACING	SIDE OVERHANG	MAX. CENTER SPACING	MAX. END SPACING
14' (166")	95"	0"	10'-10"	2'-0"
14' (160")	95"	6"	10'-3"	2'-0"
12'	95"	13"	8'-4"	2'-0"
12'	82"	0"	9'-11"	2'-0"
12'	82"	13"	9'-11"	2'-0"
12'	75"	0"	10'-8"	2'-0"
12'	75"	13"	10'-8"	2'-0"

TIE-DOWN SPACING (MAX. I-BEAM PIER HEIGHT 48")*				
SECTION WIDTH	I-BEAM SPACING	SIDE OVERHANG	MAX. CENTER SPACING	MAX. END SPACING
14' (166")	95"	0"	8'-11"	2'-0"
14' (160")	95"	6"	8'-4"	2'-0"
12'	95"	13"	6'-8"	2'-0"
12'	82"	0"	8'-0"	2'-0"
12'	82"	13"	8'-0"	2'-0"
12'	75"	0"	8-8"	2'-0"
12'	75"	13"	8'-8"	2'-0"

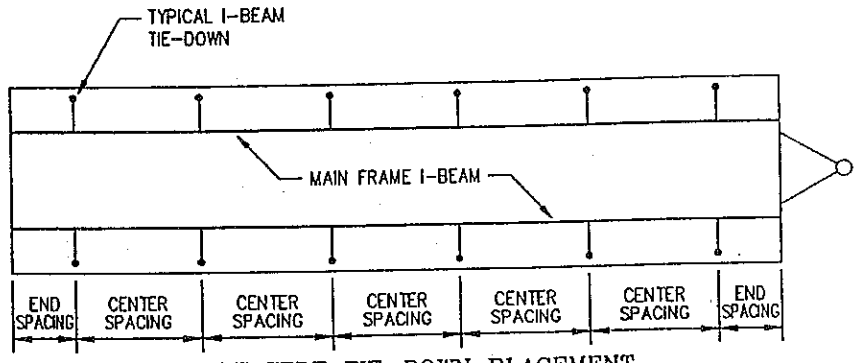

SINGLE WIDE TIE-DOWN PLACEMENT

SINGLEWIDES & DOUBLEWIDES

NOTES:

1. TIE-DOWN ANCHORS MUST BE PLACED INSIDE THE OUTLINE OF THE EXTERIOR WALLS OF THE HOME.
2. THE ANGLE BETWEEN THE TIE-DOWN STRAP AND THE GROUND MUST BE BETWEEN 40° AND 50° FOR PIERS UP TO 33 INCHES HIGH, AND NOT GREATER THAN 60° FOR PIERS UP TO 48 INCHES HIGH, UNLESS OTHERWISE SPECIFIED.

ENGINEER APPROVAL: JOHN G. DOEDEN CERTIFICATE No. 0045434 STATE OF FLORIDA REGISTERED ENGINEER

DAPIA APPROVAL: APPROVED BY NIA INC. DEC 2 1995 FEDERAL MANUFACTURED HOME CONSTRUCTION AND SAFETY STANDARDS

JACOBSEN HOMES
P.O. BOX 368
SAFETY HARBOR, FLORIDA 34695
PHONE (813) 726-1138

NOTICE: THESE SPECIFICATIONS AND DRAWINGS ARE ORIGINAL, PROPRIETARY, AND CONFIDENTIAL MATERIALS OF JACOBSEN MANUFACTURING INC. SUCH MATERIALS ARE PROVIDED TO THE RECIPIENT FOR SPECIFIC PURPOSES AND MUST BE KEPT CONFIDENTIAL AND SECRET FROM OTHERS.

DRAWN BY: RR	DATE: 10-31-95	REV. LETTER:
DRAWING TITLE: TIE-DOWN SPACING		
DRAWING NUMBER: AD-Z1-0010		

PAGE 2

ZONE I TIE-DOWN PLACEMENT

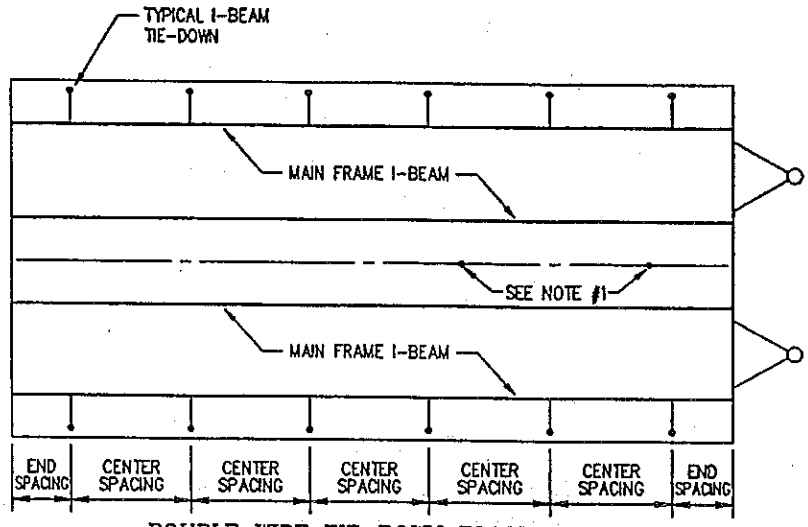

DOUBLE WIDE TIE-DOWN PLACEMENT

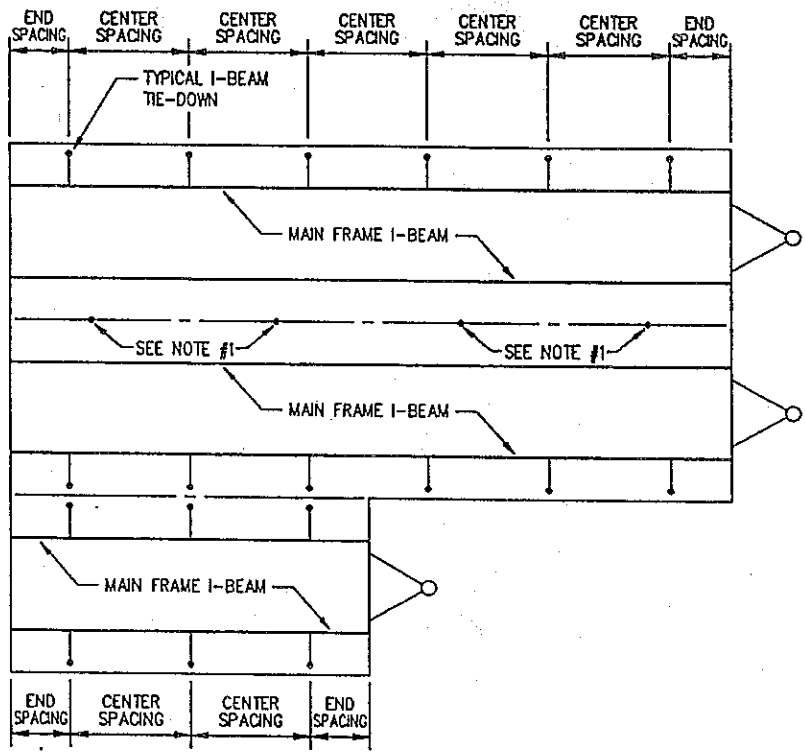

TRIPLE WIDE TIE-DOWN PLACEMENT

NOTES:

1. SEE DETAIL 'B' PAGE 4 FOR BLOCKING AND ANCHORING OF MARRIAGE WALL OPENINGS WIDER THAN 49 INCHES.

ENGINEER APPROVAL:

JOHN C. DOEDEN CERTIFICATE No. 0045484 STATE OF FLORIDA REGISTERED ENGINEER

11/10/95

DAPIA APPROVAL:

APPROVED BY NIA INC. DEC 2 1995

FEDERAL MANUFACTURED HOME CONSTRUCTION AND SAFETY STANDARDS

JACOBSEN HOMES
P.O. BOX 368
SAFETY HARBOR, FLORIDA 34695
PHONE (813) 726-1138

NOTICE:
THESE SPECIFICATIONS AND DRAWINGS ARE ORIGINAL, PROPRIETARY, AND CONFIDENTIAL MATERIALS OF JACOBSEN MANUFACTURING INC. SUCH MATERIALS ARE PROVIDED TO THE RECIPIENT FOR SPECIFIC PURPOSES AND MUST BE KEPT CONFIDENTIAL AND SECRET FROM OTHERS.

DRAWN: RR	DATE: 10-31-95	REV. LETTER:
DRAWING TITLE: TIE-DOWN PLACEMENT		
DRAWING NUMBER: AD-Z1-0020		

ZONE 1 INSTALLATIONS

1. FOR HOMES LOCATED IN ZONE I, FOLLOW THE MANUFACTURER'S ZONE 2 INSTALLATION INSTRUCTIONS FOR THE INSTALLATION OF LONGITUDINAL ANCHORS.

2. FOR HOMES LOCATED IN ZONE I ONLY, FOLLOW THE MANUFACTURER'S INSTALLATION INSTRUCTIONS FOR THE INSTALLATION OF SHINGLES AND/OR LAP SIDING. FOR ALL OTHER WIND ZONES REFER TO DETAILS IN THE SET-UP MANUAL AND/OR THIS ADDENDUM.

NOTES:

DAPIA APPROVAL:
APPROVED BY REV.
FEB 0 1 2000
NTA INC.
FEDERAL MANUFACTURED HOME CONSTRUCTION AND SAFETY STANDARDS

JACOBSEN HOMES
P.O. BOX 368
SAFETY HARBOR, FLORIDA 34695
PHONE (727) 726-1138

NOTICE:
THESE SPECIFICATIONS AND DRAWINGS ARE ORIGINAL, PROPRIETARY, AND CONFIDENTIAL MATERIALS OF JACOBSEN MANUFACTURING INC. SUCH MATERIALS ARE PROVIDED TO THE RECIPIENT FOR SPECIFIC PURPOSES AND MUST BE KEPT CONFIDENTIAL AND SECRET FROM OTHERS.

DRAWN BY: M.T.	DATE: 2-1-00	REV. LETTER: A
DRAWING TITLE: ZONE 1 INST.		
DRAWING NUMBER: AD-Z1-0100		

ADDENDUM
FOR INTERSECTING UNITS

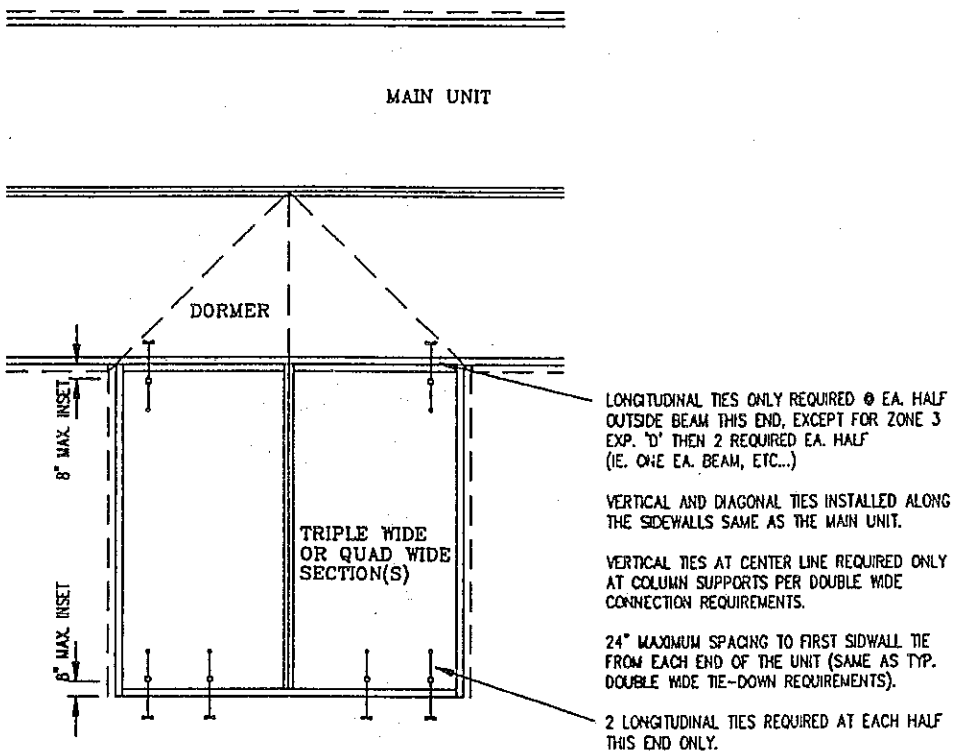

MAXIMUM PIER HEIGHT FOR VARIOUS ZONES
(REFER ALSO TO SIDEWALL TIE-DOWNS MAXIMUM HEIGHT):

	ZONE 2	ZONE 3
EXPOSURE 'C'	90"	56"
EXPOSURE 'D'	39"	46"

CONNECT THE TRIPLE WIDE OR QUAD. WIDE SECTION(S) TO THE DORMER AND MAIN UNIT PER DOUBLE WIDE MARRIAGE LINE DETAILS AS OUTLINED IN THE SET-UP MANUAL. (EXCEPTION: NAILING ONLY IS REQUIRED AT FLOOR CONNECTION, NO STRAPS ARE REQUIRED TO BE INSTALLED ACROSS THE FLOOR CONNECTION AT THIS AREA.)

NOTES:

1. FOR QUAD SECTIONS, EACH 'DOUBLE SECTION' OF THE UNIT SHALL BE DESIGNED INDEPENDENT OF THE OTHER STRUCTURE. (IE. SHEARWALLS, TIE-DOWNS, RIDGE-BEAMS, COLUMN SUPPORTS, ETC... ARE CALCULATED FOR EACH MULTI-SECTION.)

ENGINEER APPROVAL:
JOHN C. DOEDEN REGISTERED No. ENE8703571 STATE OF INDIANA PROFESSIONAL ENGINEER 6/4/95

DAPIA APPROVAL:
APPROVED BY
NTA INC.
FEDERAL MANUFACTURED HOME CONSTRUCTION AND SAFETY STANDARDS
JUN 1 5 1995

JACOBSEN HOMES
P.O. BOX 368
SAFETY HARBOR, FLORIDA 34695
PHONE (813) 726-1138

NOTICE:
THESE SPECIFICATIONS AND DRAWINGS ARE ORIGINAL, PROPRIETARY, AND CONFIDENTIAL MATERIALS OF JACOBSEN MANUFACTURING INC. SUCH MATERIALS ARE PROVIDED TO THE RECIPIENT FOR SPECIFIC PURPOSES AND MUST BE KEPT CONFIDENTIAL AND SECRET FROM OTHERS.

DRAWN BY: C.L.Y.	DATE: 5-16-95	REV. LETTER:
DRAWING TITLE: ADDENDUM -INT. UNITS		
DRAWING NUMBER: QUADADD1		

ALT. ROOF ASSEMBLY FOR MULTI-WIDES

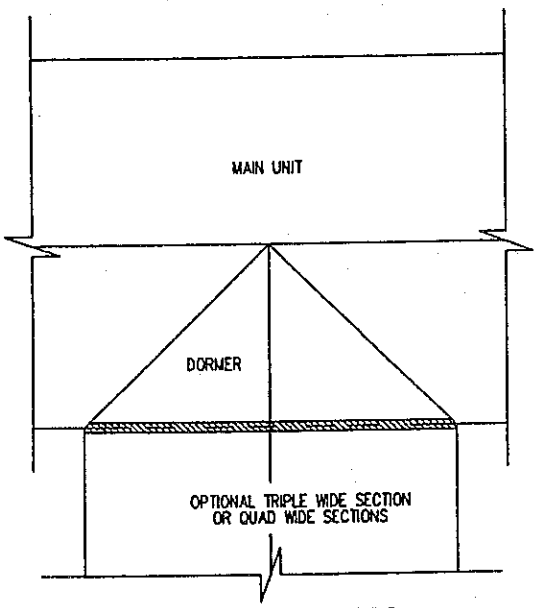

CENTERLINE CONNECTION FOR QUAD UNITS IS THE SAME AS FOR THE MAIN UNIT (REFER TO SET-UP DETAILS).

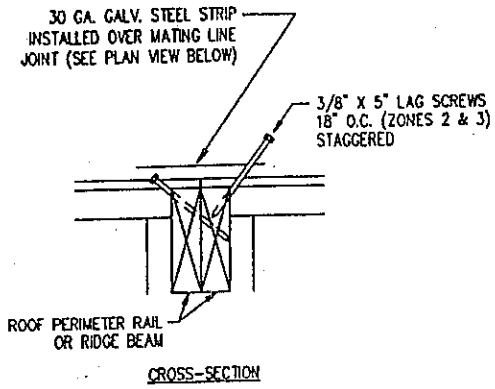

CROSS-SECTION

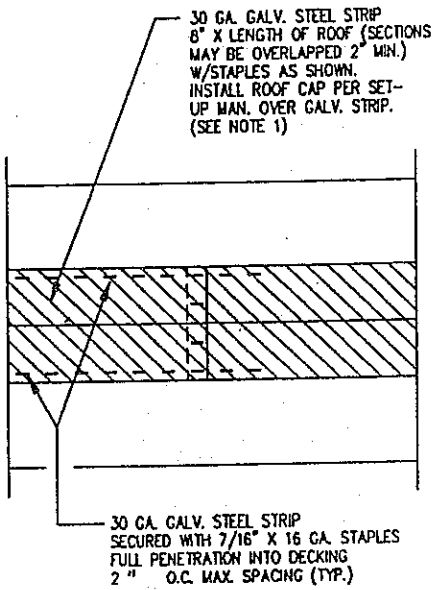

PLAN VIEW

NOTES:

1. 30 GA. GALV. STRIPS USED MAY BE WIND DEFLECTORS REMOVED FROM ROOF IN ORIGINAL CONDITION (EXCEPT FOR STAPLE HOLES). STEEL STRIP MAY BE CONTINUOUS OR PIECED.
2. SHINGLES IN THE DORMER AREA OF THE MAIN UNIT MAY BE SHIPPED LOOSE AND INSTALLED ON SITE AFTER THE UNITS HAVE BEEN ATTACHED TO PREVENT ANY TRANSIT DAMAGE AND TO ENSURE THE SHINGLES LINE-UP FROM ONE SECTION TO THE NEXT.

ENGINEER APPROVAL: JOHN DOEDEN REGISTERED No. ENE8703571 STATE OF INDIANA PROFESSIONAL ENGINEER 6/9/95

DAPIA APPROVAL: APPROVED BY Rev JUN 15 1995 NTA INC. FEDERAL MANUFACTURED HOME CONSTRUCTION AND SAFETY STANDARDS

JACOBSEN HOMES
P.O. BOX 368
SAFETY HARBOR, FLORIDA 34695
PHONE (813) 726-1138

NOTICE:
THESE SPECIFICATIONS AND DRAWINGS ARE ORIGINAL, PROPRIETARY, AND CONFIDENTIAL MATERIALS OF JACOBSEN MANUFACTURING INC. SUCH MATERIALS ARE PROVIDED TO THE RECIPIENT FOR SPECIFIC PURPOSES AND MUST BE KEPT CONFIDENTIAL AND SECRET FROM OTHERS.

DRAWN BY: C.L.Y.	DATE: 5-16-95	REV. LETTER:
DRAWING TITLE: ALT. ROOF ASSEMBLY		
DRAWING NUMBER: QUADADD2		

JACOBSEN
HOMES

600 PACKARD COURT
SAFETY HARBOR, FLORIDA 34695
(727) 726-1138