Power Spectral Density of Line Code

TEAM 01

Youssef Mohammed Ibrahim Sayed

Youssef Hisham Ahmed Hikel

Mina Wael Tanagho Fahmy

Nader Hany Maurice Wahib

Abdelrahaman Ahmed Kamal Atta

Faculty of Engineering
Department of Electronics and Communications
Course code : EECG232-17
Course name : Introduction to Communication Systems

Power Spectral Density of Line Code

TEAM 01

يوسف محمد ابراهيم سيد

Student ID : 91240892
Section : 4
BN : 34

يوسف هشام أحمد هيكل

Student ID : 91240907
Section : 4
BN : 36

مينا وائل تناغو فهمي

Student ID : 91240804
Section : 4
BN : XX

نادر هاني موريس وهيب

Student ID : 91240805
Section : 4
BN : XX

عبدالرحمن أحمد كمال عطا

Student ID : 91240410
Section : 4
BN : XX

Supervisor: Dr. Mohammed Nafie
Professor, Cairo University

Co-supervisor: ENG. Mohammed Khaled
Teacher Assistant, Cairo University

Faculty of Engineering

Department of Electronics and Communications

Course code : EECG232-17

Course name : Introduction to Communication Systems

Abstract

Contents

1 Problem Description 2

2 Introduction 3

3 Control Flags 4

4 Generation of Data 5

5 Creating the Unipolar Ensemble 6

6 Creating The Polar RZ Ensemble 7

7 Applying Random Initial Time Shifts 8

8 Preparing Cell Arrays For Analysis 9

9 Q1 Statistical Mean Calculation 10

10 Q2 Is the Process Stationary 11

11 Q3 Statistical Autocorrelation 12

12 Q4 Time Mean & Autocorrelation of One Waveform 13

13 Q5 Is the Random Process Ergodic 14

14 Plotting the PSD of the Ensemble 15

15 Q6 Signal Bandwidth 16

Appendices

A Appendix 18

1
Problem Description

In this project, we are simulating a software radio. Software radio is a technique that uses software to perform radio signal processing tasks that were traditionally done by hardware. The software radio allows for greater flexibility and adaptability in radio communication systems, as it can be easily reconfigured and updated through software changes. In this project, we will be simulating a software radio using MATLAB. We will be implementing various components of the software radio, such as modulation, demodulation, filtering, and channel coding, to create a complete simulation of a software radio system and see the problems ourselves and try design a proper solution.

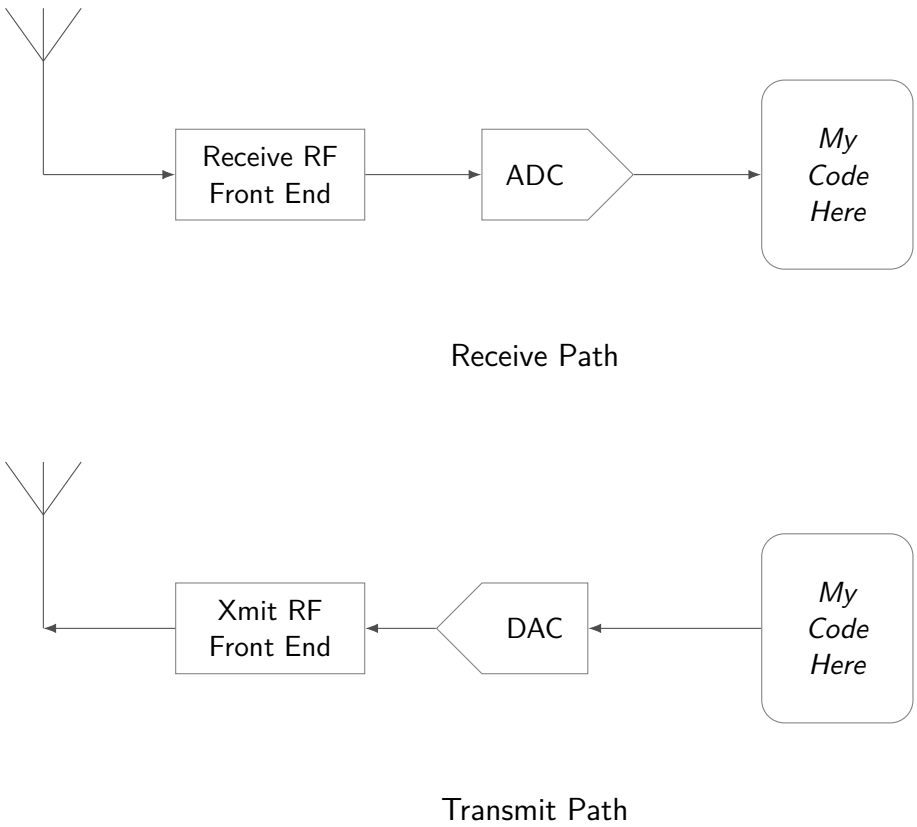

Figure 1.1: *Software Radio Transmit and Receive Paths.*

2
Introduction

In this project, we are going to use the software radio technique to simulate the hardware problems and try to make it as close as it is with the antenna, while also using the techniques we learned through our communications course. We are going to design the transmitter first. Our code at the transmitter will define the modulation technique and the coding used. Once the digital data is generated, it goes through a Digital-to-Analog Converter (DAC) so it can actually take the form of three different transmitted signals: Polar RZ, Polar NRZ, and Unipolar. However, the bit-stream generated at the transmitter is actually random, and there can also be asynchronization between the transmitter and the receiver, which is also random. Therefore, in our simulation, we will generate a random bit-stream, and the output will be treated as a random process. Then, for each generated ensemble, we will calculate its statistical mean, the time mean, the ensemble and time autocorrelation functions, and the bandwidth. We will also determine whether the random process is stationary and ergodic.

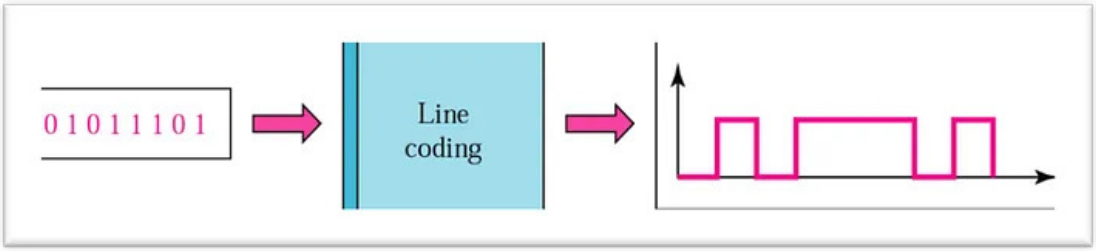

Figure 2.1: *A simple illustration of the line coding process.*

3
Control Flags

In the start of our MATLAB code, we will define some variables which we will call the control flags, these variables are set to control the output and the process in the whole code without rewriting each one in each line and to make the process easier.

Listing 1: *Defining the control flags.*

```
%% Control Flags
N_bits         = 100;           % Number of bits per realization.
N_realizations = 500;           % Number of realizations.
Pw             = 0.07;          % Pulse width of the bit.
Ts             = 0.01;          % Time sample.
L              = round(Pw/Ts);  % Samples per symbol period (L=7).
A              = 4;             % Amplitude.
N_fft          = 1024;          % FFT size.
Fs             = 1/Ts;          % Sampling frequency.
freq           = (-N_fft/2:N_fft/2-1) * (Fs/N_fft);  % Frequency axis.
center         = floor(N_fft/2) + 1;                  % Center bin.
half_len       = 100;           % Max tau used in correlation_manual.
```

4

Generation of Data

5

Creating the Unipolar Ensemble

6

Creating The Polar RZ Ensemble

7

Applying Random Initial Time Shifts

8

Preparing Cell Arrays For Analysis

9

Q1 Statistical Mean Calculation

10

Q2 Is the Process Stationary

11

Q3 Statistical Autocorrelation

12

Q4 Time Mean & Autocorrelation of One Waveform

13

Q5 Is the Random Process Ergodic

14

Plotting the PSD of the Ensemble

15
Q6 Signal Bandwidth

Appendices

A
Appendix