Power Spectral Density of Line Code

TEAM 01

Youssef Mohammed Ibrahim Sayed

Youssef Hisham Ahmed Hikel

Mina Wael Tanagho Fahmy

Nader Hany Maurice Wahib

Abdelrahaman Ahmed Kamal Atta

Faculty of Engineering
Department of Electronics and Communications
Course code : EECG232-17
Course name : Introduction to Communication Systems

Power Spectral Density of Line Code

TEAM 01

يوسف محمد ابراهيم سيد

Student ID : 91240892
Section : 4
BN : 34

يوسف هشام أحمد هيكل

Student ID : 91240907
Section : 4
BN : 36

مينا وائل تناغو فهمي

Student ID : 91240804
Section : 4
BN : XX

نادر هاني موريس وهيب

Student ID : 91240805
Section : 4
BN : XX

عبدالرحمن أحمد كمال عطا

Student ID : 91240410
Section : 4
BN : XX

Supervisor: Dr. Mohammed Nafie
Professor, Cairo University

Co-supervisor: ENG. Mohammed Khaled
Teacher Assistant, Cairo University

Faculty of Engineering

Department of Electronics and Communications

Course code : EECG232-17

Course name : Introduction to Communication Systems

Abstract

Contents

1 Problem Description 2

2 Introduction 4

3 Control Flags 5

4 Generation of Data 6

5 Creating the Unipolar Ensemble 7

6 Creating The Polar RZ Ensemble 8

7 Applying Random Initial Time Shifts 9

8 Preparing Cell Arrays For Analysis 10

9 Q1 Statistical Mean Calculation 11

10 Q2 Is the Process Stationary 12

11 Q3 Statistical Autocorrelation 13

12 Q4 Time Mean & Autocorrelation of One Waveform 14

13 Q5 Is the Random Process Ergodic 15

14 Plotting the PSD of the Ensemble 16

15 Q6 Signal Bandwidth 17

Appendices

A Appendix 19

1
Problem Description

In this project, we are simulating a software radio. Software radio is a technique that uses software to perform radio signal processing tasks that were traditionally done by hardware. The software radio allows for greater flexibility and adaptability in radio communication systems, as it can be easily reconfigured and updated through software changes. In this project, we will be simulating a software radio using MATLAB. We will be implementing various components of the software radio, such as modulation, demodulation, filtering, and channel coding, to create a complete simulation of a software radio system and see the problems ourselves and try design a proper solution.

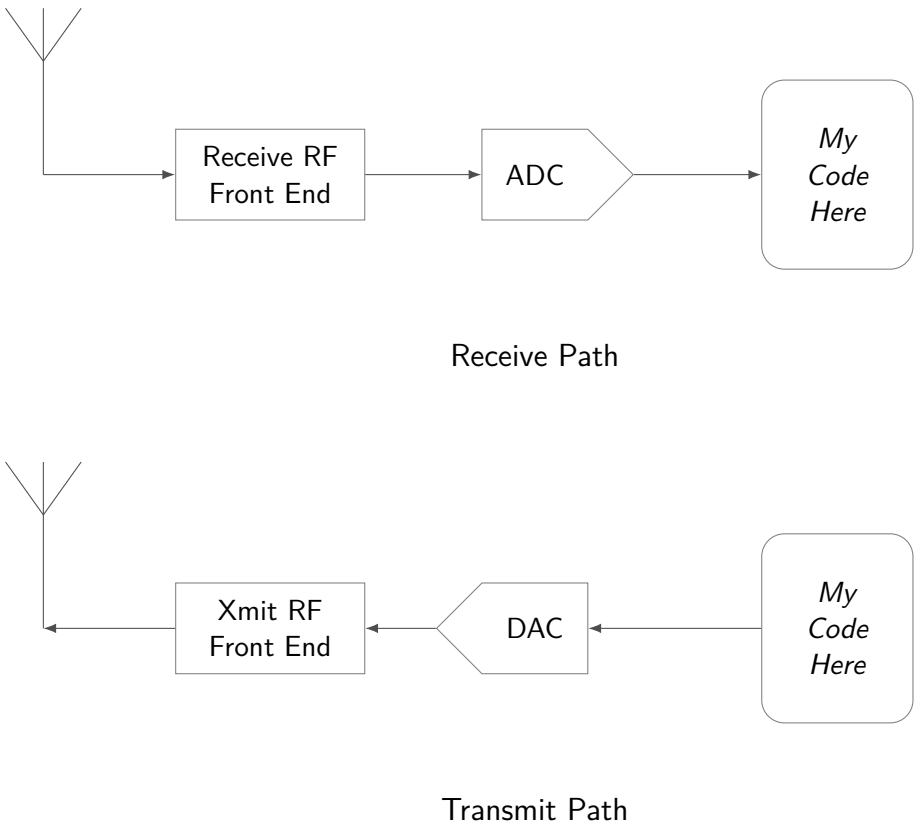

Figure 1.1: *Software Radio Transmit and Receive Paths.*

2

Introduction

3
Control Flags

4

Generation of Data

5

Creating the Unipolar Ensemble

6

Creating The Polar RZ Ensemble

7

Applying Random Initial Time Shifts

8

Preparing Cell Arrays For Analysis

9

Q1 Statistical Mean Calculation

10

Q2 Is the Process Stationary

11

Q3 Statistical Autocorrelation

12

Q4 Time Mean & Autocorrelation of One Waveform

13

Q5 Is the Random Process Ergodic

14

Plotting the PSD of the Ensemble

15
Q6 Signal Bandwidth

Appendices

A
Appendix