A-A (1:4)

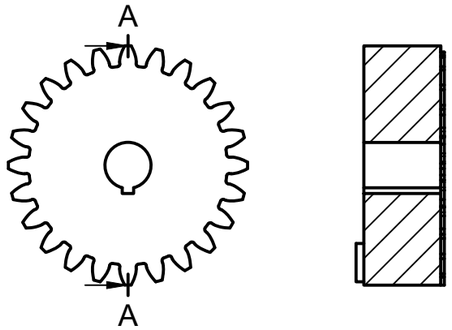

B-B (1:4)

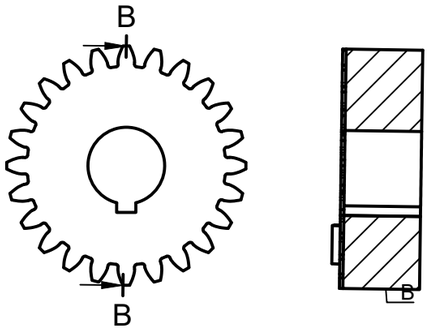

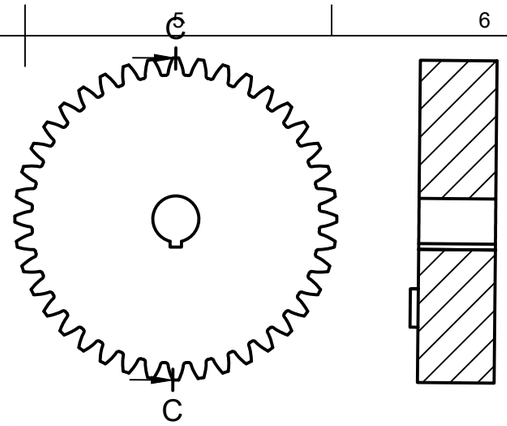

EYE BOLT

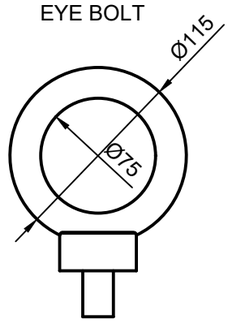

DOWEL PIN

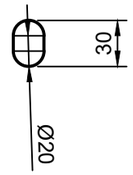

INPUT SHAFT PINION FIRST STAGE				
Pinion No	No of teeth	Module	Thickness(B)	Pitch Circle Diameter
1	20	6	50	120
2	24	6	50	144

INTERMEDIATE SHAFT GEAR 1st STAGE				
Gear No	No of teeth	Module	Thickness(B)	Pitch Circle Diameter
1	24	6	50	144
2	20	6	50	120
INTERMEDIATE SHAFT GEAR 2nd STAGE				
Gear No				
1	40	5	50	200
2	20	5	50	100
3	30	5	50	150

OUTPUT SHAFT PINION SECOND STAGE				
Gear No	No of teeth	Module	Thickness(B)	Pitch Circle Diameter
1	20	5	50	100
2	40	5	50	200
3	36	5	50	180

BEARING SCALE 1:4

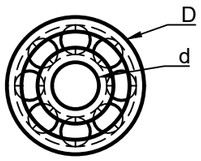

SQUARE KEY

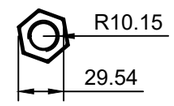

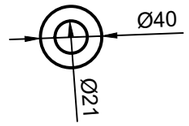

BEARING SPECIFICATIONS			
Bearing Shaft	Bearing No.	Outer Diameter(D)	Inner Diameter(d)
Input Shaft	6206	65	30
Intermediate shaft	6010	80	50
Output Shaft	6206	65	30

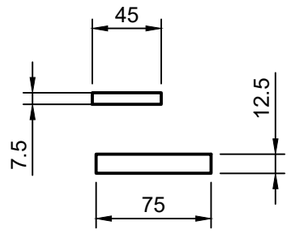

M20 HEXAGONAL BOLT

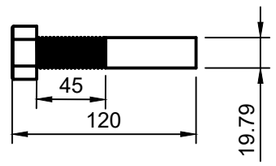

M20 HEXAGONAL NUT

WASHER

INPUT SHAFT SCALE 1:4

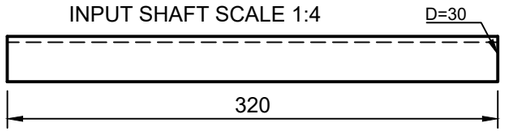

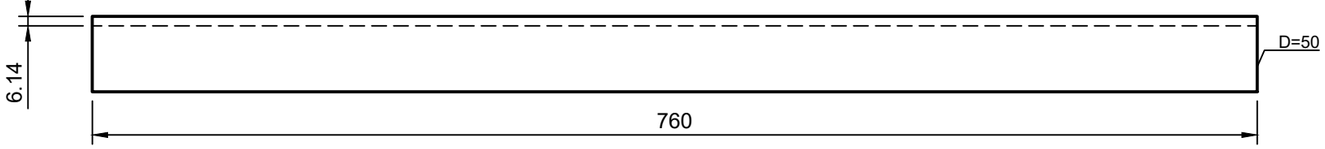

INTERMEDIATE SHAFT SCALE 1:4

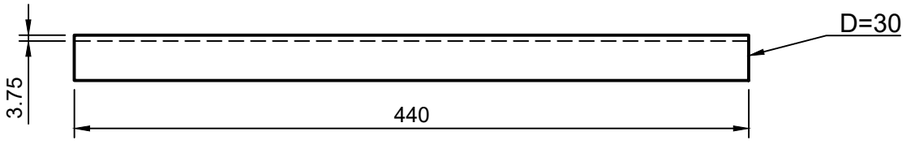

OUTPUT SHAFT SCALE 1:4

DRAIN PLUG SCALE 1:4

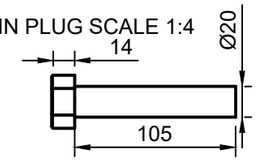

All dimensions are in mm

TOLERANCE CHART
30H6=30 $^{+0.016}_{-0}$
50H6=50 $^{+0.016}_{-0}$
15H6=15 $^{+0.016}_{-0}$
35H6=35 $^{+0.016}_{-0}$
40H6=40 $^{+0.016}_{-0}$
45F6=45 $^{+0.025}_{-0.041}$
60f6=60 $^{-0.025}_{-0.041}$
50f6=50 $^{-0.025}_{-0.041}$
15p6=15 $^{+0.045}_{+0.032}$
35m5=35 $^{+0.020}_{+0.009}$
40m5=40 $^{+0.020}_{+0.009}$

MET Bhujbal Knowledge City — INSTITUTE OF ENGINEERING

Created by: Abhishek Shimpi Roll No:72.	Approved by	
Document type	Document status	
Title: Multispeed Gearbox Drawing	DWG No.	
	Rev. / Date of issue	Sheet 1/1