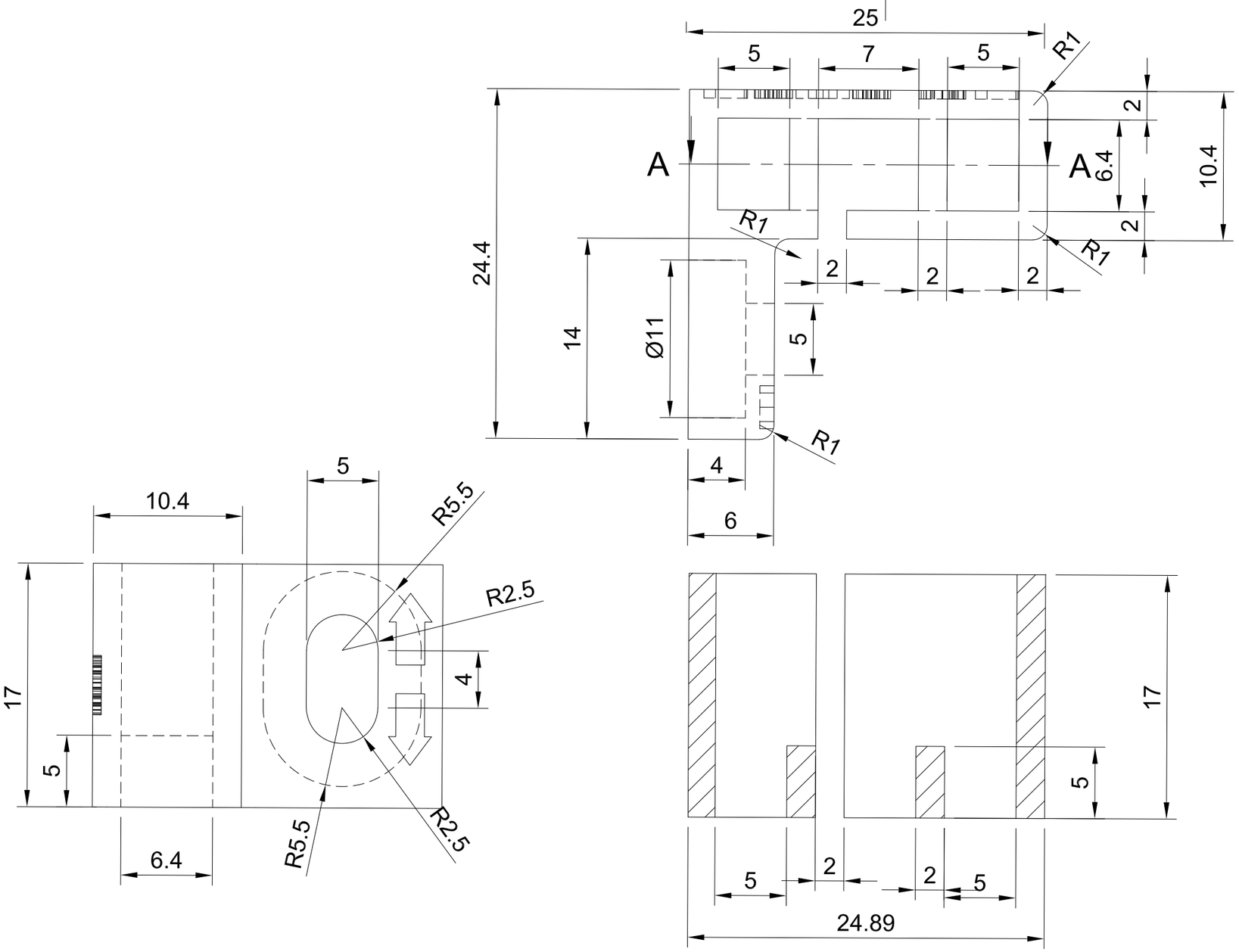

A-A (3:1)

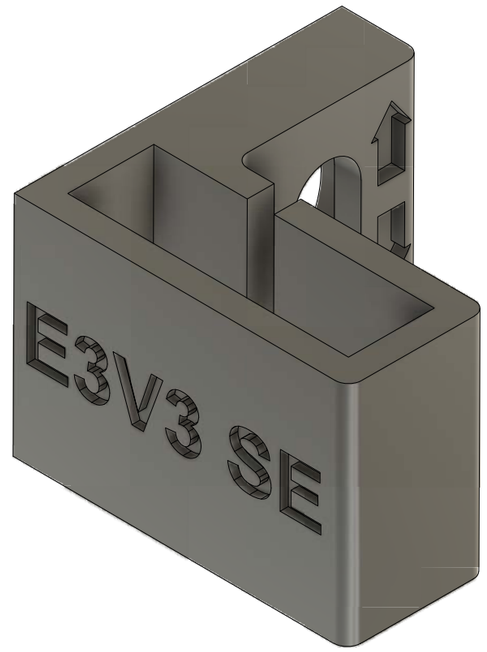

Dept.	Technical reference	Created by	Approved by
		Mamadou BA 06/29/2024	
		Document type	Document status
		Title Ender-3 V3 SE latest microswitch mount 29062024	DWG No.
			Rev. / Date of issue 06/29/2024 / Sheet 1/1