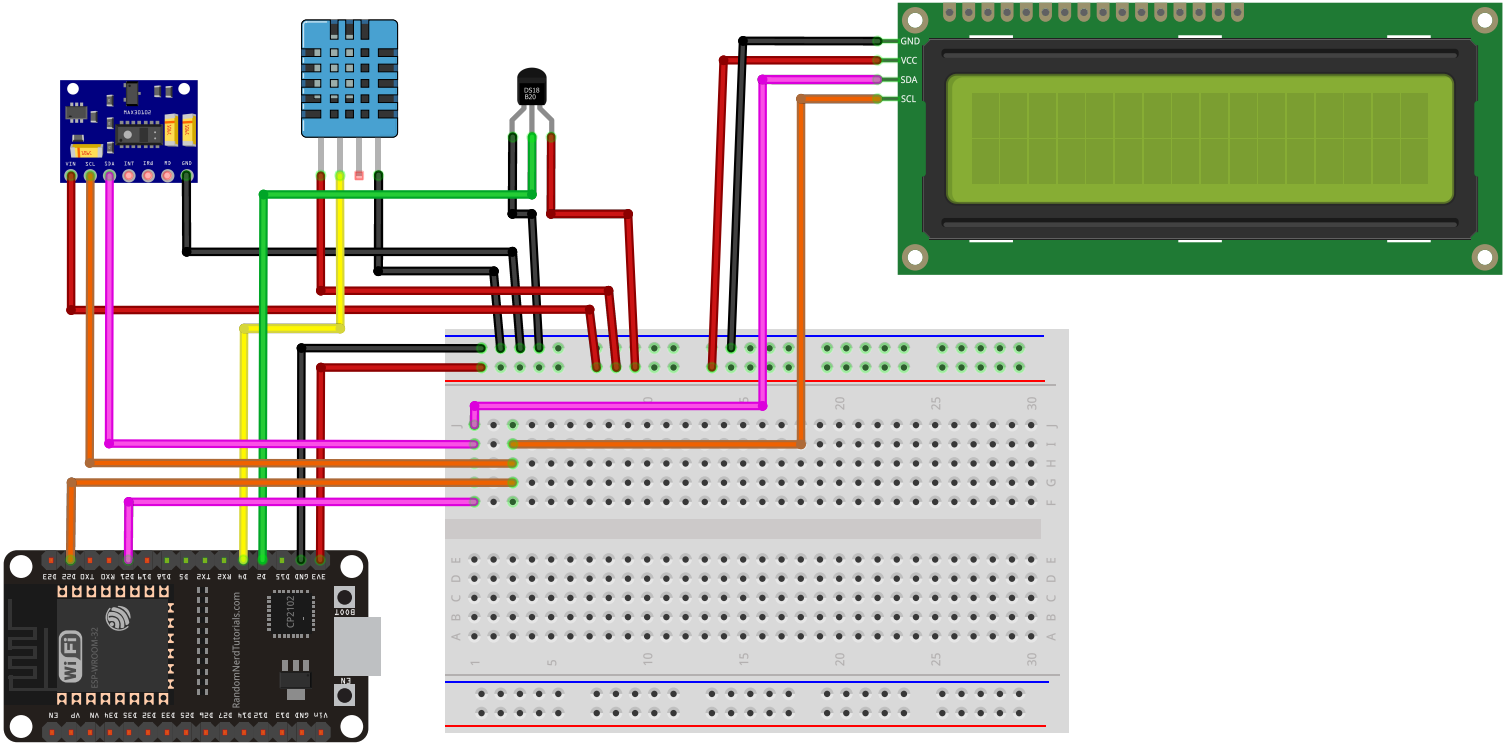
GND
VCC
SDA
SCL
DS18
B20
MAX30102
VIN SCL SDA INT IRD RD GND
ESP-WROOM-32
RandomNerdTutorials.com
CP2102
BOOT
EN
fritzing