1 Introduction to Computer Graphics

Contents

1.1 Introduction

1.2 Advantages of Computer Graphics

1.3 Applications of Computer Graphics

1.4 Classification of Computer Graphics

1.5 Display Devices ..... 2005-06, 2006-07, 2009-10, 2011-12, 2012-13 ..... Marks 7

1.6 Raster Scan Systems ..... 2005-06, 2009-10, 2010-11 ..... Marks 5

1.7 Random Scan System ..... 2010-11 ..... Marks 3

1.1 Introduction

The computer is an information processing machine. It is a tool for storing, manipulating and correlating data. There are many ways to communicate the processed information to the user. The computer graphics is one of the most effective and commonly used way to communicate the processed information to the user. It displays the information in the form of graphics objects such as pictures, charts, graphs and diagrams instead of simple text. Thus we can say that computer graphics makes it possible to express data in pictorial form. The picture or graphics object may be an engineering drawing, business graphs, architectural structures, a single frame from an animated movie or a machine parts illustrated for a service manual. It is the fundamental cohesive concept in computer graphics. Therefore, it is important to understand -

- How pictures or graphics objects are presented in computer graphics ?
- How pictures or graphics objects are prepared for presentation ?
- How previously prepared pictures or graphics objects are presented ?
- How interaction with the picture or graphics object is accomplished ?

In computer graphics, pictures or graphics objects are presented as a collection of discrete picture elements called pixels. The pixel is the smallest addressable screen element. It is the smallest piece of the display screen which we can control. The control is achieved by setting the intensity and colour of the pixel which compose the screen. This is illustrated in Fig. 1.1.1.

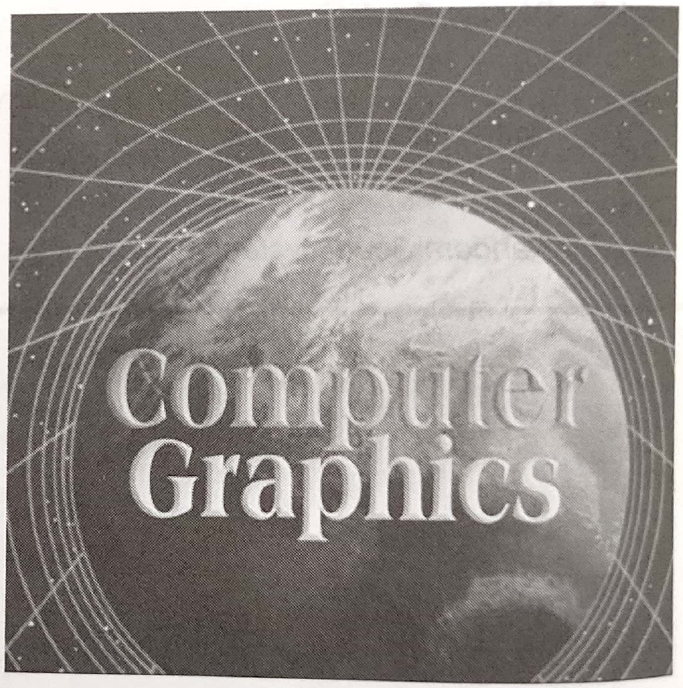

Fig. 1.1.1 Representation of picture

Each pixel on the graphics display does not represent mathematical point. Rather, it represents a region which theoretically can contain an infinite number of points. For example, if we want to display point P_1 whose co-ordinates are (4.2, 3.8) and point P_2 whose co-ordinates are (4.8, 3.1) then P_1 and P_2 are represented by only one pixel (4, 3), as shown in the Fig. 1.1.2. In general, a point is represented by the integer part of x and integer part of y, i.e., pixel (int (x), int (y)).

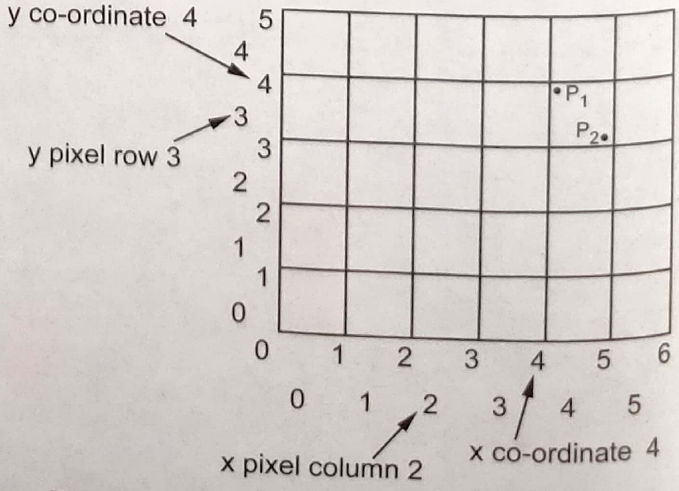

Fig. 1.1.2 Pixel display area of 6× 5

The special procedures determine which pixel will provide the best approximation to the desired picture or graphics object. The process of determining the appropriate pixels for representing picture or graphics object is known as **rasterization**, and the process of representing continuous picture or graphics object as a collection of discrete pixels is called **scan conversion**.

The computer graphics allows rotation, translation, scaling and performing various projections on the picture before displaying it. It also allows to add effects such as hidden surface removal, shading or transparency to the picture before final representation. It provides user the control to modify contents, structure, and appearance of pictures or graphics objects using input devices such as a keyboard, mouse, or touch-sensitive panel on the screen. There is a close relationship between the input devices and display devices. Therefore, graphics devices includes both input devices and display devices.

Review Questions

1. *What is pixel ?*
2. *Define scan conversion.*

1.2 Advantages of Computer Graphics

Let us discuss the advantages of computer graphics.

- Today, a high quality graphics displays of personal computer provide one of the most natural means of communicating with a computer.
- It provides tools for producing pictures not only of concrete, "real-world" objects but also of abstract, synthetic objects, such as mathematical surfaces in 4D and of data that have no inherent geometry, such as survey results.
- It has an ability to show moving pictures, and thus it is possible to produce animations with computer graphics.
- With computer graphics use can also control the animation by adjusting the speed, the portion of the total scene in view, the geometric relationship of the objects in the scene to one another, the amount of detail shown and so on.
- The computer graphics provides tool called **motion dynamics**. With this tool user can move and tumble objects with respect to a stationary observer, or he can make objects stationary and the viewer moving around them. A typical example is walk throughs made by builder to show flat interior and building surroundings. In many case it is also possible to move both objects and viewer.

- The computer graphics also provides facility called **update dynamics**. With update dynamics it is possible to change the shape, colour or other properties of the objects being viewed.
- With the recent development of digital signal processing (DSP) and audio synthesis chip the interactive graphics can now provide audio feedback along with the graphical feedbacks to make the simulated environment even more realistic.

In short, computer graphics permits extensive, high-bandwidth user-computer interaction. It significantly enhances the ability to understand information, to perceive trends and to visualize real or imaginary objects either moving or stationary in a realistic environment. It also makes it possible to get high quality and more precise results and products with lower analysis and design cost.

Review Question

1. *List the advantages of interactive graphics.*

1.3 Applications of Computer Graphics

The use of computer graphics is wide spread. It is used in various areas such as industry, business, government organizations, education, entertainment and most recently the home. Let us discuss the representative uses of computer graphics in brief.

- **User Interfaces :** User friendliness is one of the main factors underlying the success and popularity of any system. It is now a well established fact that graphical interfaces provide an attractive and easy interaction between users and computers. The built-in graphics provided with user interfaces use visual control items such as buttons, menus, icons, scroll bar etc, which allows user to interact with computer only by mouse-click. Typing is necessary only to input text to be stored and manipulated.

GUI

- **Plotting of Graphics and Chart :** In industry, business, government and educational organizations, computer graphics is most commonly used to create 2D and 3D graphs of mathematical, physical and economic functions in form of histograms, bars and pie-charts. These graphs and charts are very useful for decision making.
- **Office Automation and Desktop Publishing :** The desktop publishing on personal computers allow the use of graphics for the creation and dissemination of information. Many organizations do the in-house creation and printing of documents. The desktop publishing allows user to create documents which contain text, tables, graphs and other forms of drawn or scanned images or pictures. This is one approach towards the office automation. $/Rs. Printing.

3D-Printers

- **Computer-aided Drafting and Design :** The computer-aided drafting uses graphics to design components and systems electrical, mechanical, electro-mechanical and electronic devices such as automobile bodies, structures of building, airplane, ships, very large-scale integrated (VLSI) chips, optical systems and computer networks.
- **Simulation and Animation :** Use of graphics in simulation makes mathematic models and mechanical systems more realistic and easy to study. The interactive graphics supported by animation software proved their use in production of animated movies and cartoons films.
- **Art and Commerce :** There is a lot of development in the tools provided by computer graphics. This allows user to create artistic pictures which express messages and attract attentions. Such pictures are very useful in advertising.
- **Process Control :** By the use of computer now it is possible to control various processes in the industry from a remote control room. In such cases, process systems and processing parameters are shown on the computer with graphic symbols and identifications. This makes it easy for operator to monitor and control various processing parameters at a time.
- **Cartography :** Computer graphics is also used to represent geographic maps, weather maps, oceanographic charts, contour maps, population density maps and so on. <GIS App.>
- **Education and Training :** Computer graphics can be used to generate models of physical, financial and economic systems. These models can be used as educational aids. Models of physical systems, physiological systems, population trends, or equipment, such as colour-coded diagram can help trainees to understand the operation of the system.
- **Image Processing :** In computer graphics, a computer is used to create pictures. Image processing, on the other hands, applies techniques to modify or interpret existing pictures such as photographs and scanned images. Image processing and computer graphics are typically combined in many applications such as to model and study physical functions, to design artificial limbs, and to plan and practice surgery. Image processing techniques are most commonly used for picture enhancements to analyze satellite photos, X-ray photography and so on.

Review Question <Chandrayaan II>

1. *Explain the representative uses of computer graphics.*

1.4 Classification of Computer Graphics

In the last section we have seen various uses of computer graphics. These uses can be classified as shown in the Fig. 1.4.1. As shown in the Fig. 1.4.1, the use of computer graphics can be classified according to dimensionality of the object to be drawn : 2D or 3D. It can also be classified according to kind of picture : Symbolic or Realistic. Many computer graphics applications are classified by the type of interaction. The type of interaction determines the user's degree of control over the object and its image. In controllable interaction user can change the attributes of the images. Role of picture gives the another classification. Computer graphics is either used for representation or it can be an end product such as drawings. Pictorial representation gives the final classification of use computer graphics. It classifies the use of computer graphics to represent pictures such as line drawing, black and white, colour and so on.

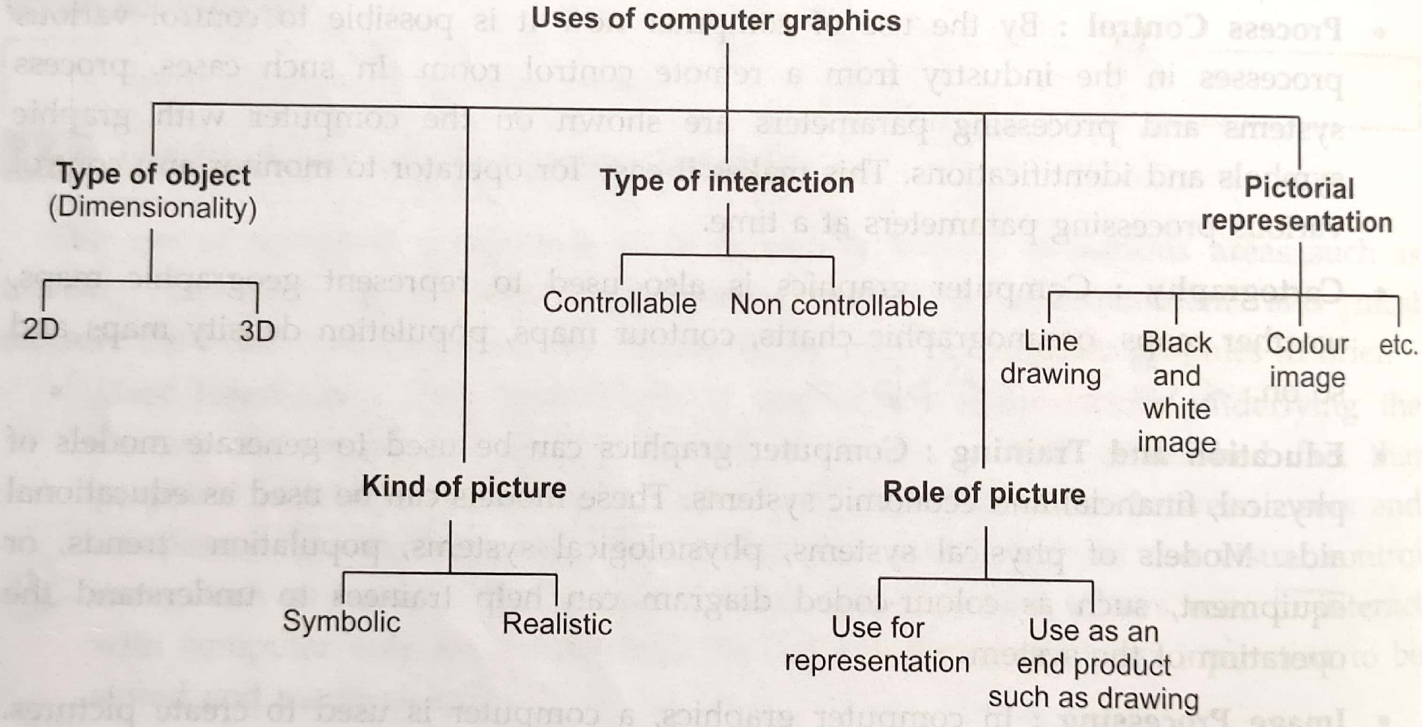

Fig. 1.4.1

Review Question

1. *Explain the classification of use of computer graphics.*

1.5 Display Devices

2005-06, 2006-07, 2009-10, 2011-12, 2012-13

The display devices are also known as **output devices**. The most commonly used output device in a graphics system is a video monitor. The operation of most video monitors is based on the standard **cathode-ray-tube** (CRT) design. Let us see the basics of the CRT.

1.5.1 Cathode-Ray-Tubes

A CRT is an evacuated glass tube. An **electron gun** at the rear of the tube produces a beam of electrons which is directed towards the front of the tube (screen) by a high voltage typically 15000 to 20,000 volts. The inner side of the screen is coated with phosphor substance which gives off light when it is stroked by electrons. This is illustrated in Fig. 1.5.1. The **control grid** voltage determines the velocity achieved by the electrons before they hit the phosphor. The control grid voltage determines how many electrons are actually in the electron beam. The more negative the control voltage is, the fewer the electrons that pass through the grid. Thus, control grid controls the intensity of the spot where the electron beam strikes the screen. The **focusing system** concentrates the electron beam so that the beam converges to a small point when it hits the phosphor coating. It is possible to control the point at which the electron beam strikes the screen, and therefore the position of the dot upon the screen, by deflecting the electron beam. The Fig. 1.5.2 shows the electrostatic deflection of the electron beam in a CRT.

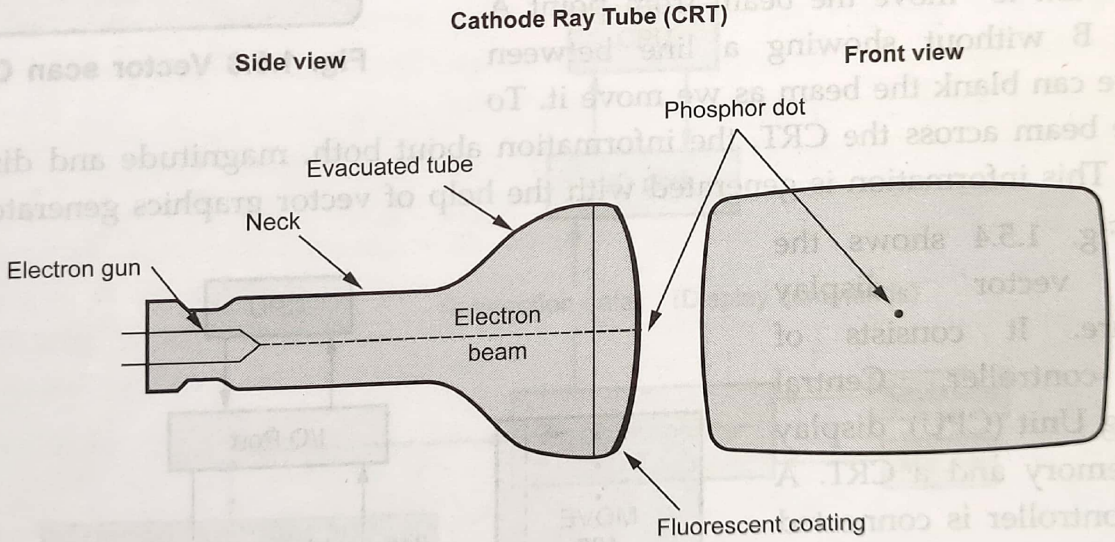

Fig. 1.5.1 Simplified representation of CRT

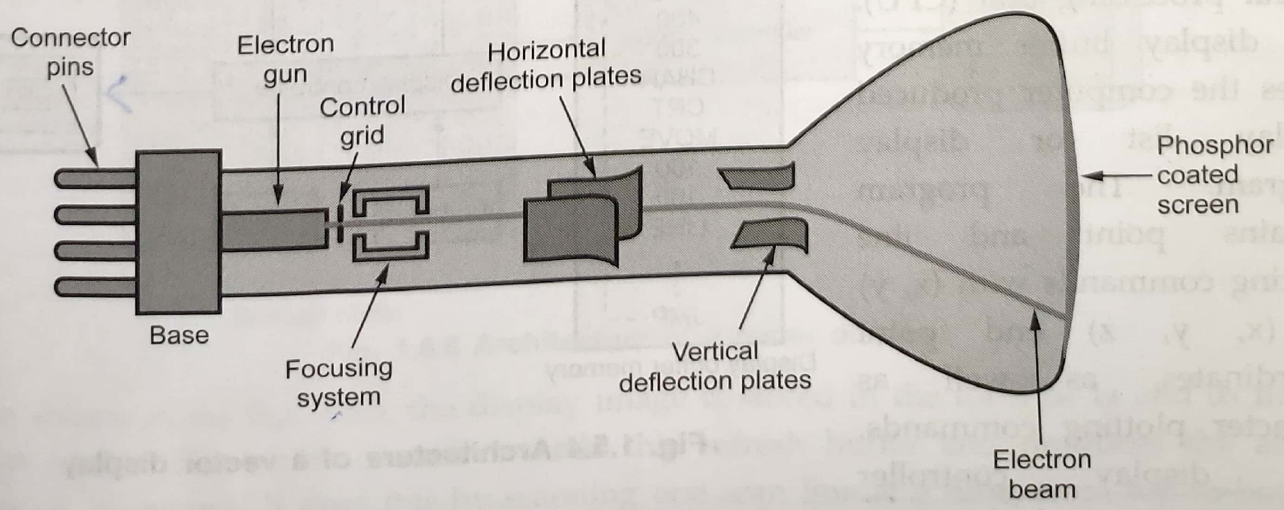

Fig. 1.5.2 Cathode ray tube

The **deflection system** of the cathode-ray-tube consists of two pairs of parallel plates, referred to as the **vertical** and **horizontal deflection plates**. The voltage applied to vertical plates controls the vertical deflection of the electron beam and voltage applied to the horizontal deflection plates controls the horizontal deflection of the electron beam. There are two techniques used for producing images on the CRT screen : **Vector scan/random scan and Raster scan.**

1.5.2 Vector Scan/Random Scan Display / Line display /

As shown in Fig. 1.5.3, vector scan CRT display directly traces out only the desired lines on CRT i.e. If we want a line connecting point A with point B on the vector graphics display, we simply drive the beam deflection circuitry, which will cause beam to go directly from point A to B. If we want to move the beam from point A to point B without showing a line between points, we can blank the beam as we move it. To move the beam across the CRT, the information about both, magnitude and direction is required. This information is generated with the help of vector graphics generator.

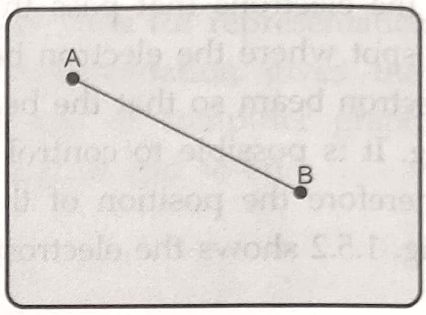

Fig. 1.5.3 Vector scan CRT

The Fig. 1.5.4 shows the typical vector display architecture. It consists of display controller, Central Processing Unit (CPU), display buffer memory and a CRT. A display controller is connected as an I/O peripheral to the central processing unit (CPU). The display buffer memory stores the computer produced display list or display program. The program contains point and line plotting commands with (x, y) or (x, y, z) end point co-ordinates, as well as character plotting commands. The display controller interprets commands for plotting points, lines and characters and sends digital and point

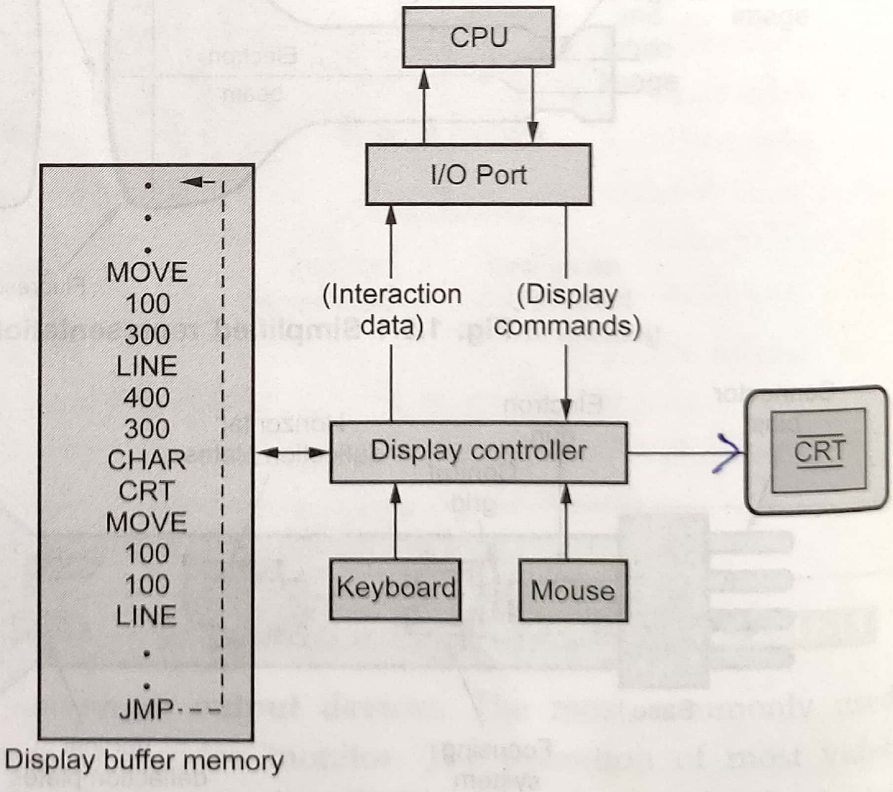

Fig. 1.5.4 Architecture of a vector display

co-ordinates to a vector generator. The vector generator then converts the digital co-ordinate values to analog voltages for beam-deflection circuits that displace an electron beam writing on the CRT's phosphor coating.

In vector displays beam is deflected from end point to end point, hence this technique is also called **random scan**. We know as beam, strikes phosphor it emits light. But phosphor light decays after few milliseconds and therefore it is necessary to repeat through the display list to refresh the phosphor at least 30 times per second to avoid flicker. As display buffer is used to store display list and it is used for refreshing, the display buffer memory is also called **refresh buffer**.

1.5.3 Raster Scan Display

The Fig. 1.5.5 shows the architecture of a raster display. It consists of display controller, central processing unit (CPU), video controller, refresh buffer, keyboard, mouse and the CRT.

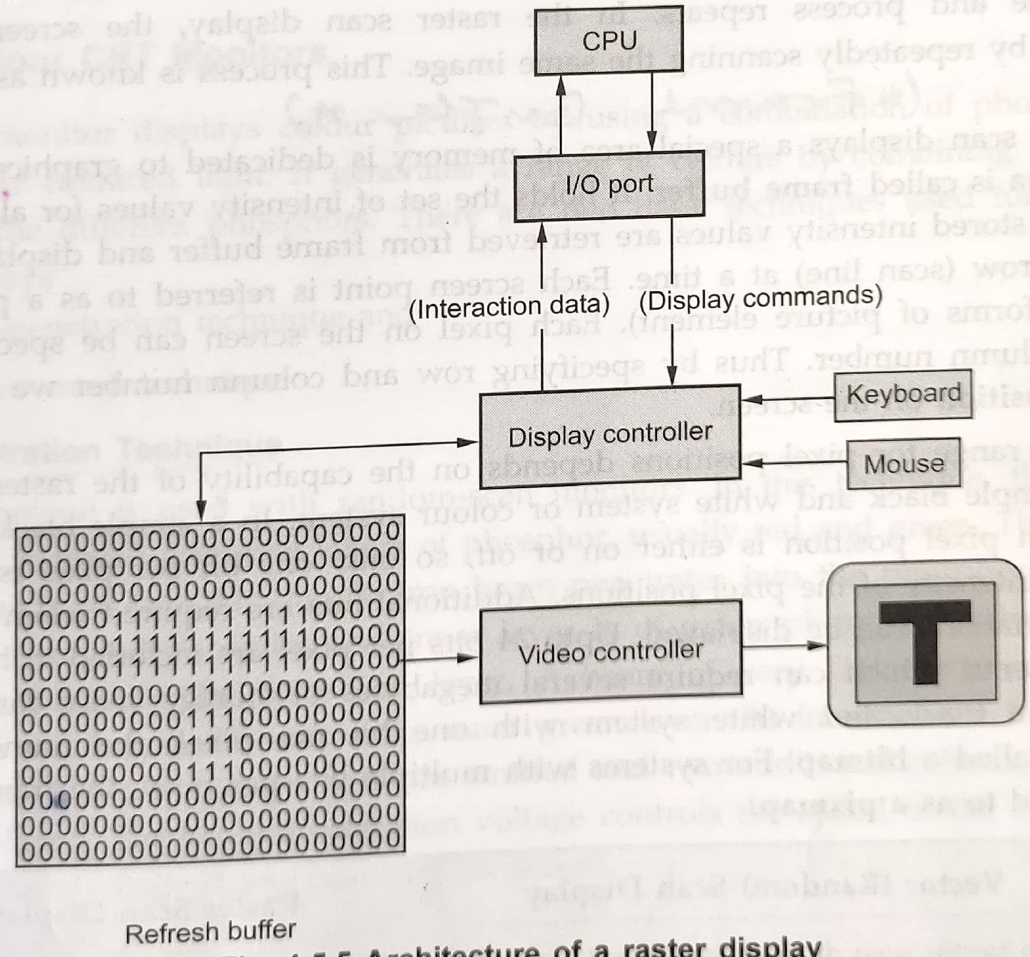

Fig. 1.5.5 Architecture of a raster display

As shown in the Fig. 1.5.5, the display image is stored in the form of 1s and 0s in the refresh buffer. The video controller reads this refresh buffer and produces the actual image on the screen. It does this by scanning one scan line at a time, from top to bottom and then back to the top, as shown in the Fig. 1.5.5.

Block Diagram

Note! Compare above pix/Arch. to inch. of M. Man.

Raster scan is the most common method of displaying images on the CRT screen. In this method, the horizontal and vertical deflection signals are generated to move the beam all over the screen in a pattern shown in the Fig. 1.5.6.

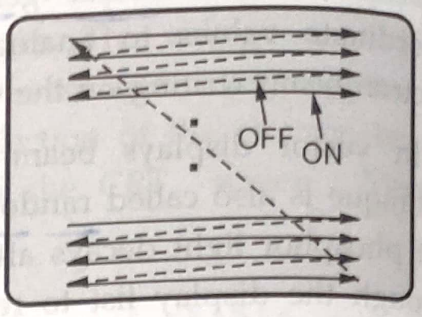

Fig. 1.5.6 Raster scan CRT

Here, the beam is swept back and forth from the left to the right across the screen. When the beam is moved from the left to the right, it is ON. The beam is OFF, when it is moved from the right to the left as shown by dotted line in Fig. 1.5.6.

When the beam reaches the bottom of the screen, it is made OFF and rapidly retraced back to the top left to start again. A display produced in this way is called **raster scan display**. Raster scanning process is similar to reading different lines on the page of a book. After completion of scanning of one line, the electron beam flies back to the start of next line and process repeats. In the raster scan display, the screen image is maintained by repeatedly scanning the same image. This process is known as **refreshing of** screen. (* Frame Buffer *)

In raster scan displays a special area of memory is dedicated to graphics only. This memory area is called **frame buffer**. It holds the set of intensity values for all the screen points. The stored intensity values are retrieved from frame buffer and displayed on the screen one row (scan line) at a time. Each screen point is referred to as a **pixel** or **pel** (shortened forms of picture element). Each pixel on the screen can be specified by its row and column number. Thus by specifying row and column number we can specify the **pixel position** on the screen.

Intensity range for pixel positions depends on the capability of the raster system. It can be a simple black and white system or colour system. In a simple black and white system, each pixel position is either on or off, so only one bit per pixel is needed to control the intensity of the pixel positions. Additional bits are required when colour and intensity variations can be displayed. Upto 24 bits per pixel are included in high quality display systems, which can require several megabytes of storage space for the frame buffer. On a black and white system with one bit per pixel, the frame buffer is commonly called a **bitmap**. For systems with multiple bits per pixel, the frame buffer is often referred to as a **pixmap**.

Sr. No.	Vector (Random) Scan Display	Raster Scan Display
1.	In vector scan display the beam is moved between the end points of the graphics primitives.	In raster scan display the beam is moved all over the screen one scan line at a time, from top to bottom and then back to top.
2.	Vector display flickers when the number of primitives in the buffer becomes too large.	In raster display, the refresh process is independent of the complexity of the image.

Color depth of frame ⇒ No. of bits for color

3.	Scan conversion is not required.	Graphics primitives are specified in terms of their endpoints and must be scan converted into their corresponding pixels in the frame buffer.
4.	Scan conversion hardware is not required.	Because each primitive must be scan-converted, real time dynamics is far more computational and requires separate scan conversion hardware.
5.	Vector display draws a continuous and smooth lines.	Raster display can display mathematically smooth lines, polygons, and boundaries of curved primitives only by approximating them with pixels on the raster grid.
6.	Cost is more.	Cost is low.
7.	Vector display only draws lines and characters.	Raster display has ability to display areas filled with solid colours or patterns.

Table 1.5.1

1.5.4 Colour CRT Monitors

A CRT monitor displays colour pictures by using a combination of phosphors that emit different-coloured light. It generates a range of colours by combining the emitted light from the different phosphors. There are two basic techniques used for producing colour displays :

- Beam-penetration technique and
- Shadow-mask technique

Beam-penetration Technique

This technique is used with random-scan monitors. In this technique, the inside of CRT screen is coated with two layers of phosphor, usually red and green. The displayed colour depends on how far the electron beam penetrates into the phosphor layers. The outer layer is of red phosphor and inner layer is of green phosphor. A beam of slow electrons excites only the outer red layer. A beam of very fast electrons penetrates through the red layer and excites the inner green layer. At intermediate beam speeds, combinations of red and green light are emitted and two additional colours, orange and yellow displayed. The beam acceleration voltage controls the speed of the electrons and hence the screen colour at any point on the screen.

Merits and Demerits

- It is an inexpensive technique to produce colour in random scan monitors.
- It can display only four colours.
- The quality of picture produced by this technique is not as good as compared to other techniques.

Shadow Mask Technique

The shadow mask technique produces a much wider range of colours than the beam penetration technique. Hence this technique is commonly used in raster-scan displays including colour TV. In a shadow mask technique, CRT has three phosphor colour dots at each pixel position. One phosphor dot emits a red light, another emits a green light, and the third emits a blue light. The Fig. 1.5.7 shows the shadow mask CRT. It has three electron guns, one for each colour dot, and a shadow mask grid just behind the phosphor coated screen.

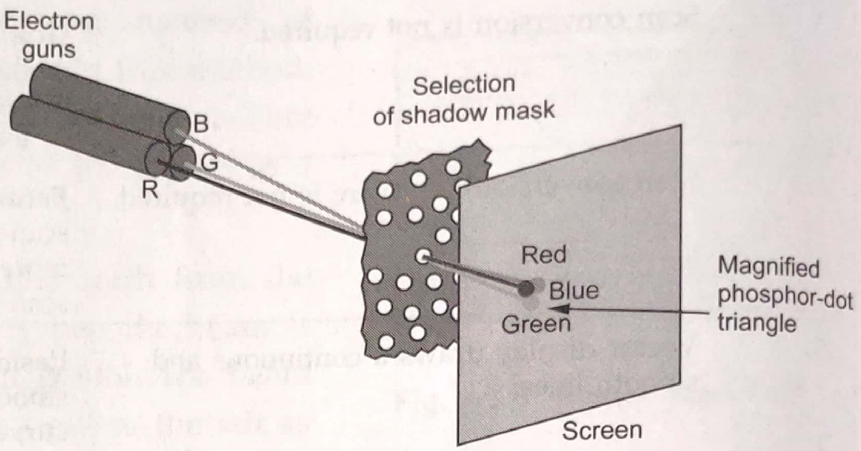

Fig. 1.5.7

The shadow mask grid consists of series of holes aligned with the phosphor dot pattern. As shown in the Fig. 1.5.7, three electron beams are deflected and focused as a group onto the shadow mask and when they pass through a hole in the shadow mask, they excite a dot triangle. A dot triangle consists of three small phosphor dots of red, green and blue colour. These phosphor dots are arranged so that each electron beam can activate only its corresponding colour dot when it passes through the shadow mask. A dot triangle when activated appears as a small dot on the screen which has colour of combination of three small dots in the dot triangle. By varying the intensity of the three electron beams we can obtain different colours in the shadow mask CRT.

1.5.5 Direct-View Storage Tubes

We know that, in raster scan display we do refreshing of the screen to maintain a screen image. The direct-view storage tubes give the alternative method of maintaining the screen image. A direct-view storage tube (DVST) uses the storage grid which stores the picture information as a charge distribution just behind the phosphor-coated screen.

The Fig. 1.5.8 shows the general arrangement of the DVST. It consists of two electron guns : a primary gun and a flood gun. A primary gun stores the picture pattern and the flood

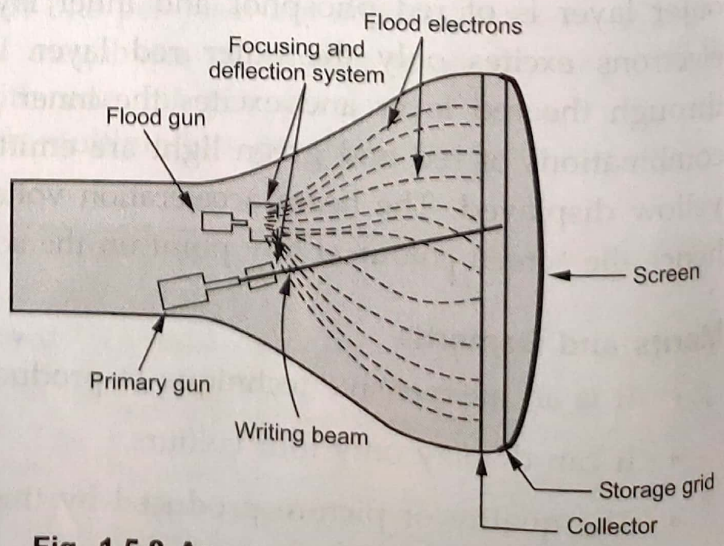

Fig. 1.5.8 Arrangement of the DVST

gun maintains the picture display. A primary gun produces high speed electrons which strike on the storage grid to draw the picture pattern. As electron beam strikes on the storage grid with high speed, it knocks out electrons from the storage grid keeping the net positive charge. The knocked out electrons are attracted towards the collector. The net positive charge on the storage grid is nothing but the picture pattern. The continuous low speed electrons from flood gun pass through the control grid and are attracted to the positive charged areas of the storage grid. The low speed electrons then penetrate the storage grid and strike the phosphor coating without affecting the positive charge pattern on the storage grid. During this process the collector just behind the storage grid smooths out the flow of flood electrons.

Advantages of DVST

1. Refreshing of CRT is not required.
2. Because no refreshing is required, very complex pictures can be displayed at very high resolution without flicker.
3. It has flat screen.

Disadvantages of DVST

1. They do not display colours and are available with single level of line intensity.
2. Erasing requires removal of charge on the storage grid. Thus erasing and redrawing process takes several seconds.
3. Selective or part erasing of screen is not possible.
4. Erasing of screen produces unpleasant flash over the entire screen surface which prevents its use of dynamic graphics applications.
5. It has poor contrast as a result of the comparatively low accelerating potential applied to the flood electrons.
6. The performance of DVST is some what inferior to the refresh CRT.

1.5.6 Flat Panel Displays

The term flat-panel display refers to a class of video devices that have reduced volume, weight, and power requirements compared to a CRT. The important feature of flat-panel display is that they are thinner than CRTs. There are two types of flat panel displays : emissive displays and nonemissive displays.

e- → Light

Emissive displays : They convert electrical energy into light energy. Plasma panels, thin-film electro luminescent displays, and light emitting diodes are examples of emissive displays.

LED

LTFT

Nonemissive displays : They use optical effects to convert sunlight or light from some other source into graphics patterns. Liquid crystal display is an example of nonemissive flat panel display.

1.5.7 Plasma Panel Display

Plasma panel display writes images on the display surface point by point, each point remains bright after it has been intensified. This makes the plasma panel functionally very similar to the DVST even though its construction is markedly different.

The Fig. 1.5.9 shows the construction of plasma panel display. It consists of two plates of glass with thin, closely spaced gold electrodes. The gold electrodes are attached to the inner faces and covered with a dielectric material. These are attached as a series of vertical conducting ribbons on one glass plate, and a set of horizontal ribbons to the other glass plate. The space between two glass plates is filled with neon-based gas and sealed. By applying voltages between the electrodes the gas within the panel is made to behave as if it were divided into tiny cells, each one independent of its neighbours. These independent cells are made to glow by placing a firing voltage of about 120 volts across it by means of the electrodes. The glow can be sustained by maintaining a high frequency alternating voltage of about 90 volts across the cell. Due to this refreshing is not required.

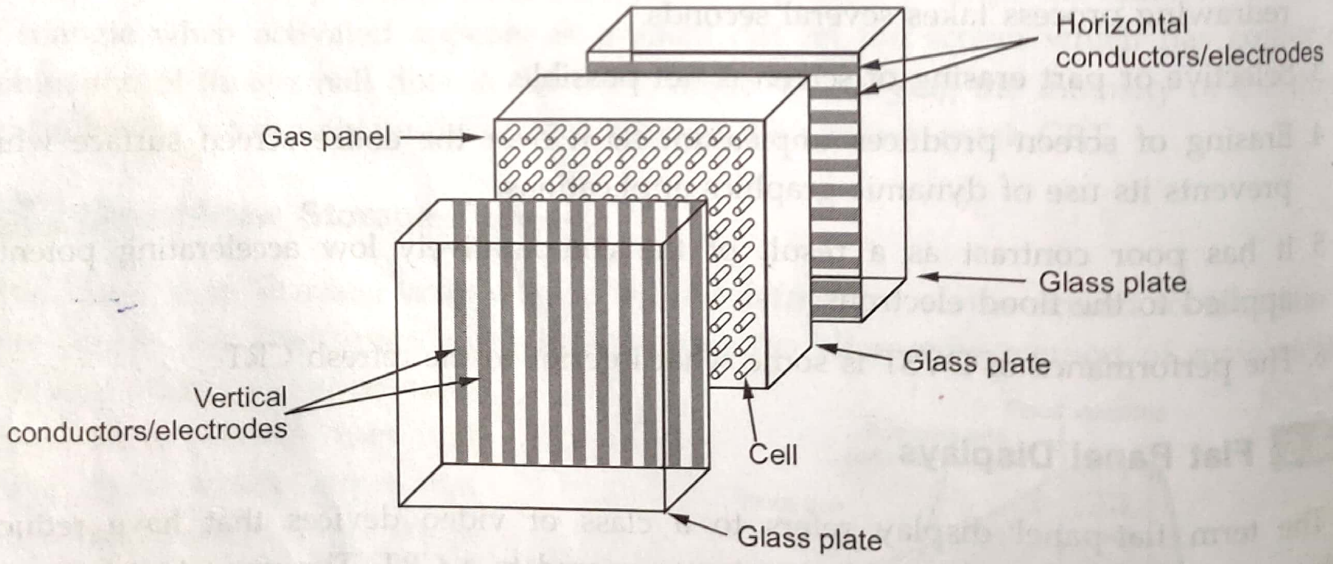

Fig. 1.5.9 Construction of plasma panel display

Advantages

1. Refreshing is not required.
2. Produces a very steady image, totally free of flicker.
3. Less bulky than a CRT.
4. Allows selective writing and selective erasing, at speed of about 20 μsec per cell.

5. It has the flat screen and is transparent, so the displayed image can be superimposed with pictures from slides or other media projected through the rear panel.

Disadvantages

1. Relatively poor resolution of about 60 dots per inch.
2. It requires complex addressing and wiring.
3. Costlier than the CRTs.

1.5.8 Liquid Crystal Monitors

The term liquid crystal refers to the fact that these compounds have a crystalline arrangement of molecules, yet they flow like a liquid. Flat panel displays commonly use nematic (thread like) liquid-crystal compounds that tend to keep the long axes of the rod- shaped molecules aligned.

* Passive Matrix LCD*

Two glass plates, each containing a light polarizer at right angles to the other plate sandwich the liquid-crystal material. Rows of horizontal transparent conductors are built into one glass plate, and columns of vertical conductors are put into the other plate. The intersection of two conductors defines a pixel position. In the ON state, polarized light passing through material is twisted so that it will pass through the opposite polarizer. It is then reflected back to the viewer. To turn OFF the pixel, we apply a voltage to the two intersecting conductors to align the molecules so that the light is not twisted as shown in the Fig. 1.5.10. This type of flat panel device is referred to as a passive matrix LCD.

In **active matrix LCD**, transistors are used at each (x, y) grid point. Use of transistors cause the crystal to change their state quickly and also to control the degree to which the state has been changed. These two properties allow LCDs to be used in miniature television sets with continuous-tone images.

The transistor can also serve as a memory for the state of a cell and can hold the cell in that state until it is changed. Thus use of transistor make cell on for all the time giving brighter display than it would be if it had to be refreshed periodically.

Advantages of LCD Displays

- Low cost
- Low weight
- Small size
- Low power consumption

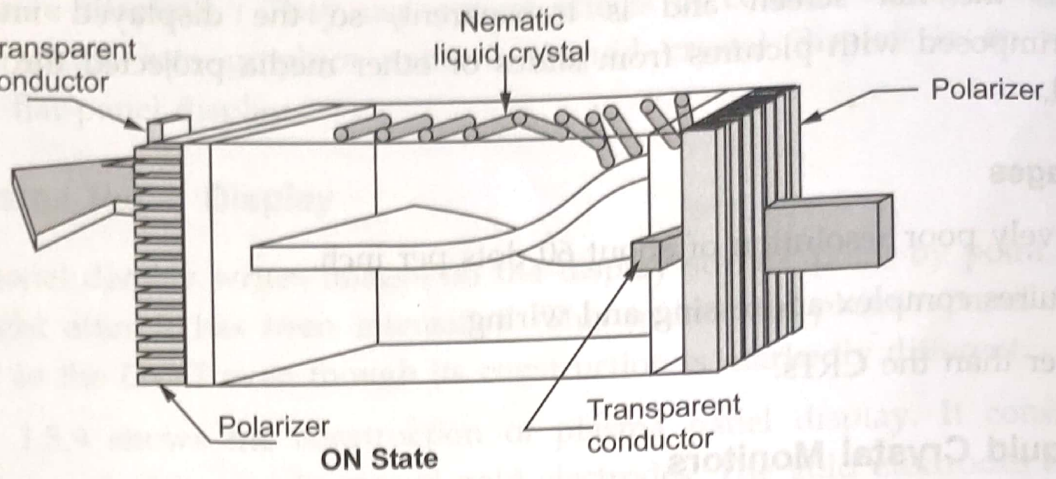

(a) Field effect display 'ON State'

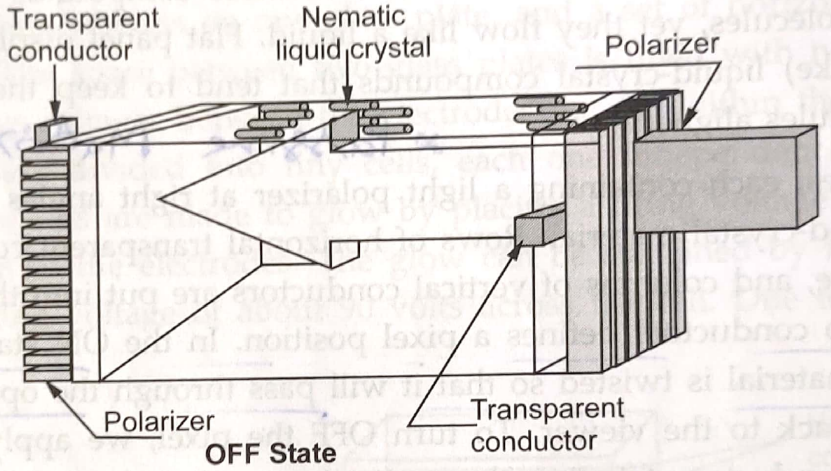

(b) Field effect display 'OFF State'

Fig. 1.5.10

1.5.9 Three-Dimensional Viewing Devices

Graphics monitors for the display of three-dimensional scenes employ the varying focal properties of a vibrating mirror to cause sequentially generated image components to appear 3-D in space. The Fig. 1.5.11 shows such three-dimensional display system. The mirror is constructed as a circular reflective plate having substantial stiffness and resilience. As the mirror vibrates, it changes focal length such that changes in the focal length are proportional to the

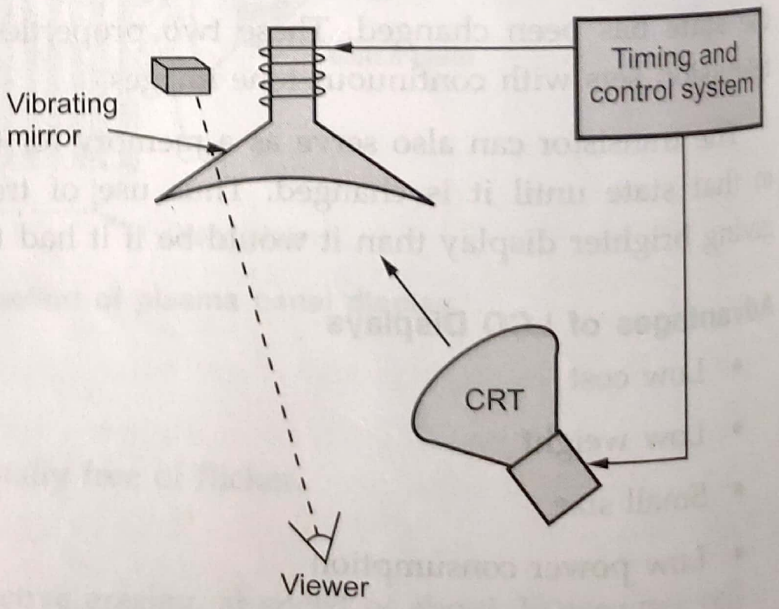

Fig. 1.5.11 Three-dimensional display system

depth of points in a scene. These vibrations are synchronized with the display of the object on a CRT. Due to this each point on the object is reflected from the mirror into a spatial position corresponding to the distance of that point from the specified viewing position. As a result we can view the object or scene from different sides.

Such a three-dimensional systems are very useful in medical applications such as ultrasonography and CAT scan to analyze data. They are also useful in three dimensional simulation systems and in geological applications to analyze topological and seismic data.

Stereoscopic and Virtual Reality Systems

Creating stereoscopic views is an another technique of viewing three-dimensional objects. The view obtained by such technique is not a true 3D view, but it does provide a 3D effect by presenting a different view to each eye of an observer so that scenes do appear to have depth.

To obtain a stereoscopic projection we have to obtain two views of scene generated from a viewing direction corresponding to each eye (left and right). Now looking simultaneously at the left view with the left eye and the right view with right eye, two views are merged into a single image providing necessary depth to appear as an 3D image. Two views of a scene can be obtained using computer or we can use a stereo camera pair to photograph scene.

We can produce stereoscopic effect in raster system by :

- Displaying each of the two views on alternate refresh cycles
- And then viewing screen through glasses with each lens designed to act as a rapidly alternating shutter that is synchronized to block out one of the views.

The stereoscopic viewing plays important role in the virtual reality systems. In such systems, the viewer can step into stereoscopic scenes and interact with the environment. Usually, a headset containing an optical system is used to generate the stereoscopic views.

1.5.10 Important Characteristics of Video Display Devices

Persistence : The major difference between phosphors is their persistence. It decides how long they continue to emit light after the electron beam is removed. Persistence is defined as the time it takes the emitted light from the screen to decay to one-tenth of its original intensity. Lower persistence phosphors require higher refreshing rates to maintain a picture on the screen without flicker. However it is useful for displaying animations. On the other hand higher persistence phosphors are useful for displaying static and highly complex pictures.

Resolution : Resolution indicates the maximum number of points that can be displayed without overlap on the CRT. It is defined as the number of points per centimeter that can be plotted horizontally and vertically.

Resolution depends on the type of phosphor, the intensity to be displayed and the focusing and deflection systems used in the CRT.

Aspect Ratio : It is the ratio of vertical points to horizontal points to produce equal length lines in both directions on the screen. An aspect ratio of 4/5 means that a vertical line plotted with four points has the same length as a horizontal line plotted with five points.

Example 1.5.1 *What is the aspect ratio of a 12"×16" display ?* **2005-06, Marks 2**

Solution : Aspect ratio = 12/16 = 3/4.

1.5.11 Applications of Large Screen Displays

1. **Education :** Many institutes use large screen displays to give effective audio-visual training in the class-room.
2. **Entertainment :** Large screen displays are used to watch live matches in the hotels or in the community halls.
3. **Sports ground :** Large screen displays are used to show current scores in the stadiums.
4. **Advertisement :** Large screen displays are used for advertising purpose in many public places.
5. **Railway, airway and roadway transport :** Large screen displays are used at the railway stations, airports and bus stands to provide the schedule information to the travelers.
6. **Seminars, presentations and video-conferencing :** Large screen displays are used during presentations, seminars and video-conferencing.
7. **Space stations :** Large screen displays are used in space stations to display the satellite images of the planets. They are used as one of the visual communication medium for communicating with the astronauts.

Plasma-panel and flat panel displays support large screen displays.

Review Questions

1. *Write a note on : a) Cathode-Ray tubes b) Raster scan display.*
2. *Distinguish between Raster and Vector graphics methods. When do we prefer ? What ?* **2006-07, Marks 5**

3. *Explain the architecture of a vector display.*
4. *Explain the architecture of a raster display*
5. *Write short notes on beam-penetration technique and shadow mask technique.*
6. *Explain the working of direct-view storage tubes.*
7. *List the advantages and disadvantages of DVST.*
8. *Write a short note on a) Flat panel display b) Plasma panel display*
9. *List the important characteristics of video display devices .*
10. *Write a short note on three-dimensional viewing devices.*
11. *Explain important characteristics of video display derives*
12. *List the applications of large screen displays.*
13. *Explain the role of pixel and frame buffer in graphics devices.* **2009-10, Marks 5**
14. *Write advantages of raster scan display over random scan display.* **2011-12, Marks 6**
15. *Explain raster scan display device and random scan display device.* **2012-13, Marks 7**

1.6 Raster Scan Systems

2005-06, 2009-10, 2010-11

In a raster scan display systems, in addition to the central processing unit, CPU, a special purpose processor, called the **video controller** or **display controller**, is used to control the operation of the display device. In this section we are going to see the raster scan systems with video controller and with display controller.

1.6.1 Raster Scan Display System with Video Controller

The Fig. 1.6.1 shows the simplest and the most common raster display system organization. It consists of CPU, system memory, frame buffer, video controller and monitor. The CPU and system memory work exactly in similar manner as in non-graphics computer system. However, in raster scan displays a special area of memory is dedicated to graphics only. This memory area is called **frame buffer**. It holds the set of intensity values for all the screen points. The video controller retrieves the stored intensity values from frame buffer and displays them on the screen one row (scan line) at a time, typically 50 times per second.

The Fig. 1.6.1 shows 24-bit plane colour frame buffer. In 24-bit plane, 8-bits are used to represent each colour, and hence there are 8-bit planes per colour. Each group of bit planes drives an 8-bit DAC. Each group generates 256 $\left(2^8\right)$ shades or intensities of red, green or blue. These are combined into 16, 777, 216 $\left[\left(2^8\right)^3 = 2^{24}\right]$ possible colours. This is a full colour frame buffer.

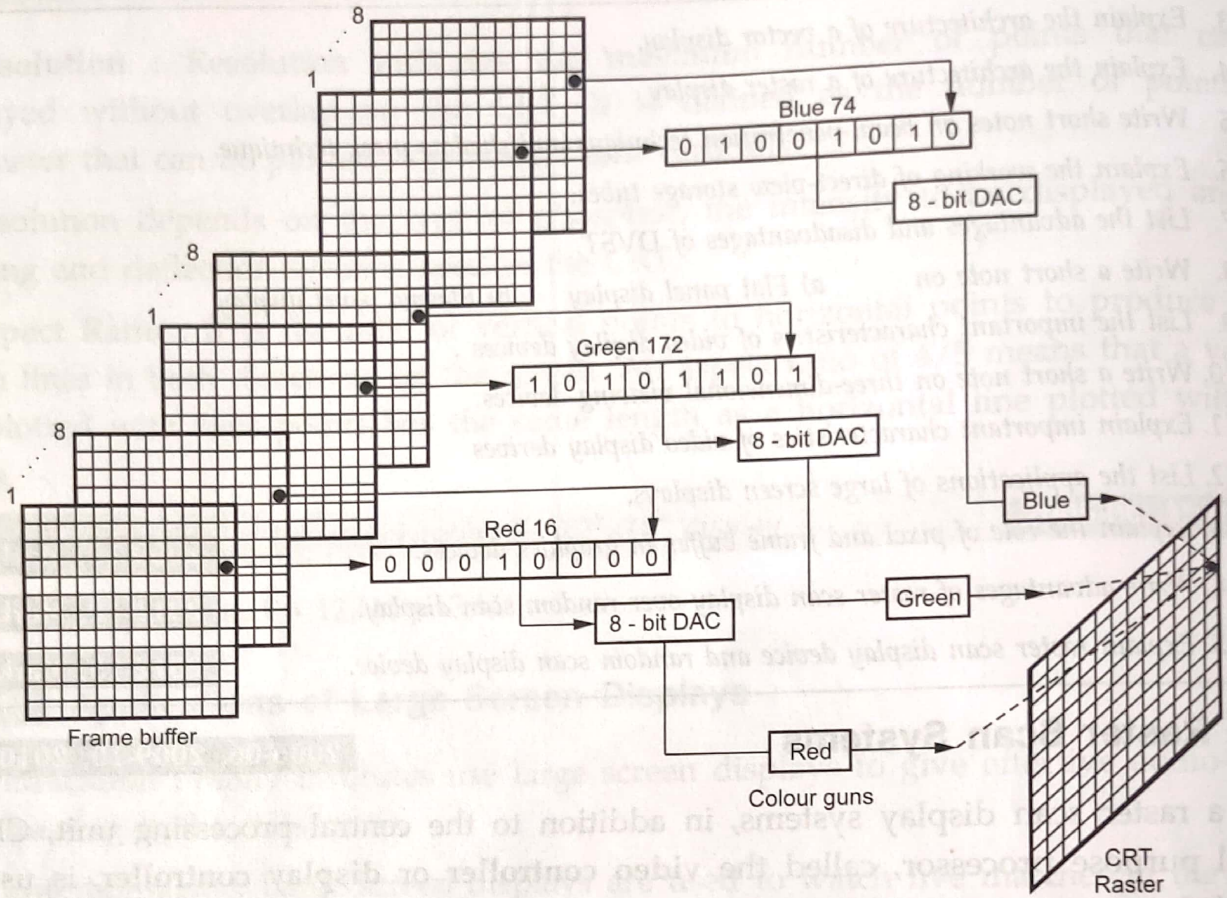

Fig. 1.6.1 A 24-bit plane colour frame buffer

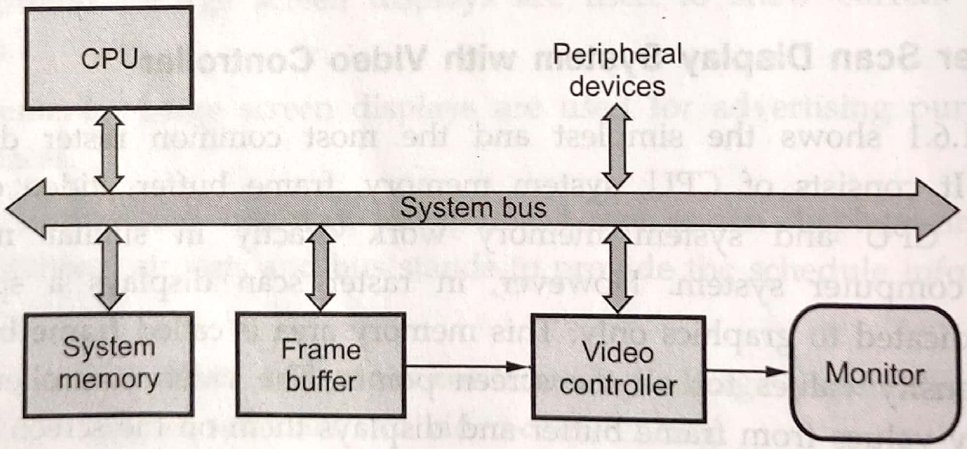

Fig. 1.6.2 A simple raster display system architecture

Many times, the simple raster display system does not provide separate frame buffer. In that case it is stored anywhere in the system memory and the video controller accesses the system memory via the system bus. This is illustrated in Fig. 1.6.3.

We have seen that the video controller receives the intensity information of each pixel from frame buffer and displays them on screen. Let us see the internal organization of a video controller.

The Fig. 1.6.4 shows the internal organization of a video controller. It consists of raster-scan generator, x and y address registers, and pixel value register. The raster-scan

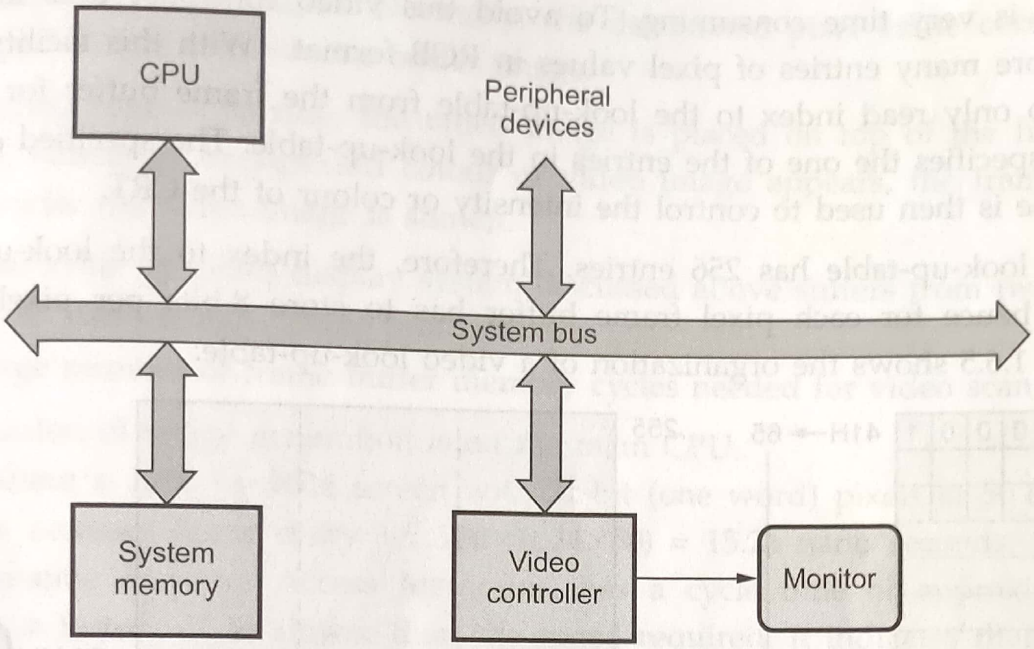

Fig. 1.6.3 Simple raster display system architecture without separate frame buffer

generator produces deflection signals that generate the raster scan. The raster scan generator also controls the x and y address registers, which in turn define the memory location to be accessed next. The frame buffer is addressed in x from 0 to x_{max} and in y from y_{max} (top scan line) to 0. During each fetch the pixel value is read and is used to control the intensity of the CRT beam.

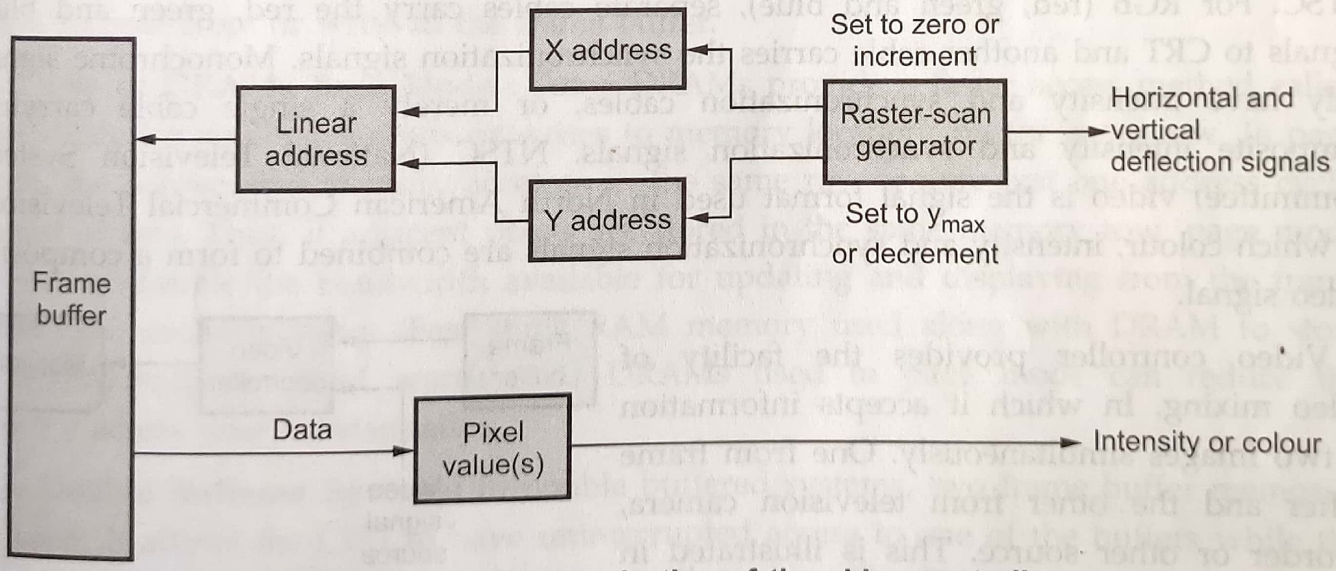

Fig. 1.6.4 Simple organization of the video controller

So far we have assumed that 1-bit per pixel bitmaps. But in practice, multiple bits per pixel are used to get additional control over the intensity of each pixel. For example, 2-bits give four intensity levels, 3-bit gives 8 intensity levels and so on.

In colour displays, 24-bits per pixel are commonly used, where 8-bits represent 256 levels for each colour. Here, it is necessary to read 24-bits for each pixel from frame

buffer. This is very time consuming. To avoid this video controller uses look-up-table (LUT) to store many entries of pixel values in RGB format. With this facility, now it is necessary to only read index to the look-up-table from the frame buffer for each pixel. This index specifies the one of the entries in the look-up-table. The specified entry in the look-up-table is then used to control the intensity or colour of the CRT.

Usually, look-up-table has 256 entries. Therefore, the index to the look-up-table has 8-bits, and hence for each pixel frame buffer has to store 8-bits per pixel instead of 24-bits. Fig. 1.6.5 shows the organization of a video look-up-table.

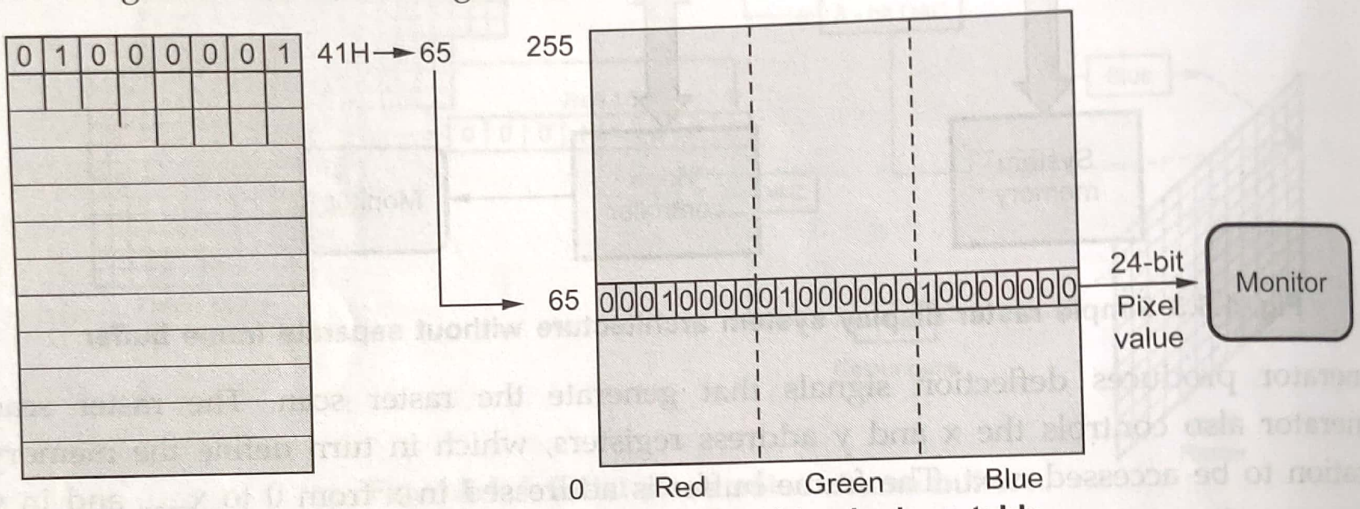

Fig. 1.6.5 Organization of a video look-up-table

The output from the video controller has one of three forms : RGB, monochrome, or NTSC. For RGB (red, green and blue), separate cables carry the red, green and blue signals to CRT and another cable carries the synchronization signals. Monochrome signal only have intensity and synchronization cables, or merely a single cable carrying composite intensity and synchronization signals. NTSC (National Television System Committee) video is the signal format used in North American Commercial Television. In which colour, intensity and synchronization signals are combined to form a composite video signal.

Video controller provides the facility of video mixing. In which it accepts information of two images simultaneously. One from frame buffer and the other from television camera, recorder or other source. This is illustrated in Fig. 1.6.6. The video controller merges the two received images to form a composite image.

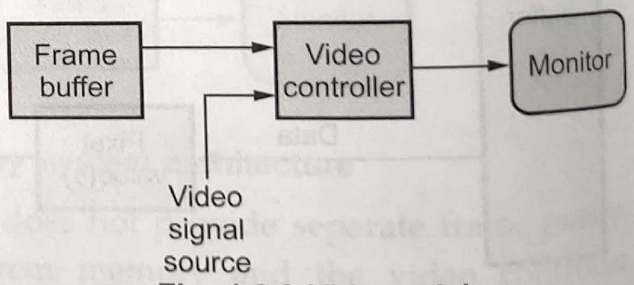

Fig. 1.6.6 Video mixing

There are two types of video mixing. In first, a graphics image is set into a video image. Here, mixing is accomplished with hardware that treats a **designated pixel value** in the frame buffer as a flag to indicate that the video signal should be shown instead of

the signal from the frame buffer. Normally, the designated pixel value corresponds to the background colour of the frame-buffer image.

In the second type of mixing, the video image is placed on top of the frame buffer image. Here, whenever background colour of video image appears, the frame buffer is shown; otherwise the video image is shown.

The simple raster graphics display system discussed above suffers from two problems and limiting its performance. These problems are

- The large number of frame buffer memory cycles needed for video scan out and
- The burden of image generation is on the main CPU.

For refreshing a 1280 by 1024 screen with 32-bit (one word) pixels at 50 Hz requires that memory accesses occur every $1/(1280 \times 1024 \times 50) = 15.26$ nano seconds. The simple DRAMs (Dynamic Random Access Memories) has a cycle time of approximately 200 nanoseconds, a factor of 16 slower than the speed required. It indicates that something must be done to increase the bandwidth to frame buffer memory. Obtaining sufficient frame buffer memory bandwidth both for video scanout and for updates by the CPU is a main problem. Let us discuss the different solutions which are proposed and used in many systems.

1. Provide Isolated Bus : The partial solution is to provide a isolated bus for frame buffer. This allows video scanout to occur simultaneously with CPU operations that do not affect the frame buffer. The simultaneous operation is not possible only when CPU wants to read from or write to the frame buffer.

2. Use of DRAMs Page Mode : Some DRAMs provide a faster access method called page mode for successive reads or writes to memory locations on the same row. In page mode, the consecutive memory accesses in the same row require just one address cycle, instead of two. Thus, if adjacent pixels are stored in the same memory row, page mode can nearly double the bandwidth available for updating and displaying from the frame buffer. The cache memory (Fast static RAM memory used along with DRAM to store more frequently accessed words) and DRAMs used in page mode can reduce the memory access time substantially.

3. Double Buffered System : In double buffered systems, two frame buffer memories are used. It allows the CPU to have uninterrupted access to one of the buffers while the video controller has uninterrupted access to the other. The Fig. 1.6.7 shows the typical implementation of double buffer system. The multiplexers are used to connect each frame buffer to the system bus and video controller. The double buffers systems are costly because they require twice memory than the memory required for single buffered memory systems.

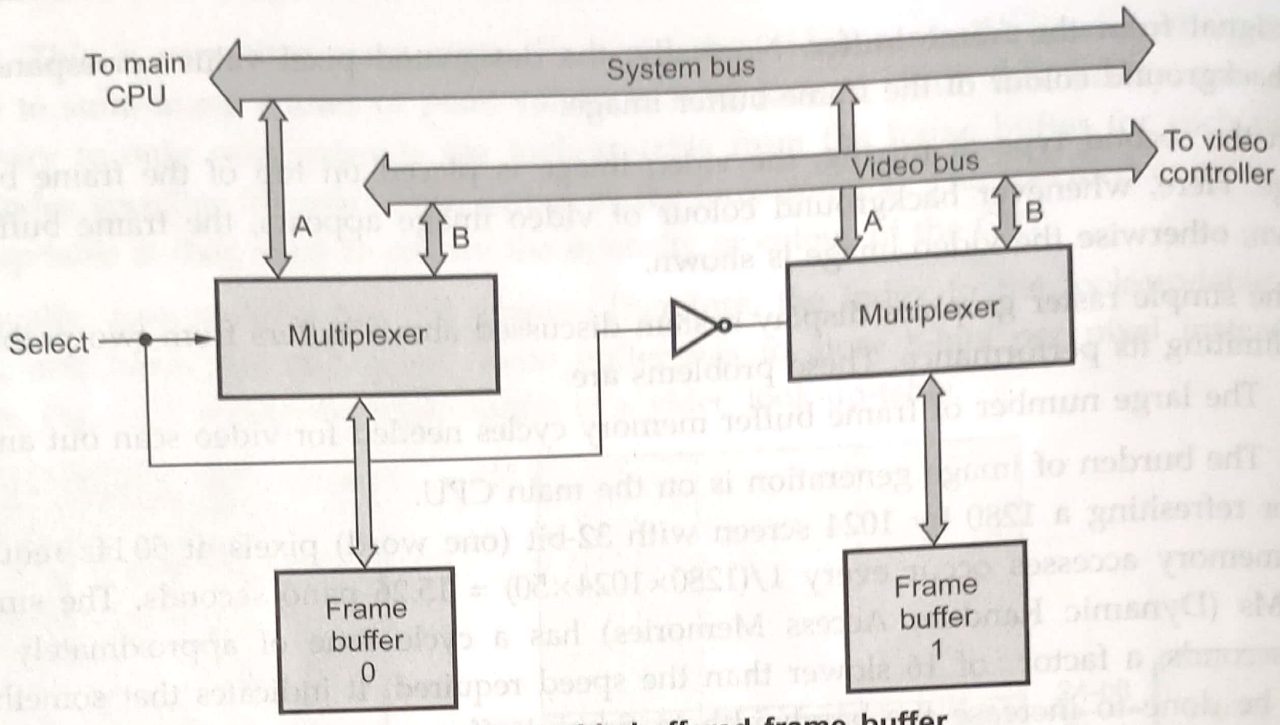

Fig. 1.6.7 Double-buffered frame buffer

Use of VRAM : The use of VRAM (video RAM) allows video scanout to be independent of other frame buffer operations. A VRAM is a new type of DRAM which contains a parallel-in/serial out data register connected to a second data port. The serial data output enables to transfer data out of the chip at high speeds. It can be used for video scanout. Thus, video scanout can occur in parallel with normal reads from and write to the chip, virtually eliminating the video scanout problem. The Fig. 1.6.8 shows the frame buffer using video RAM.

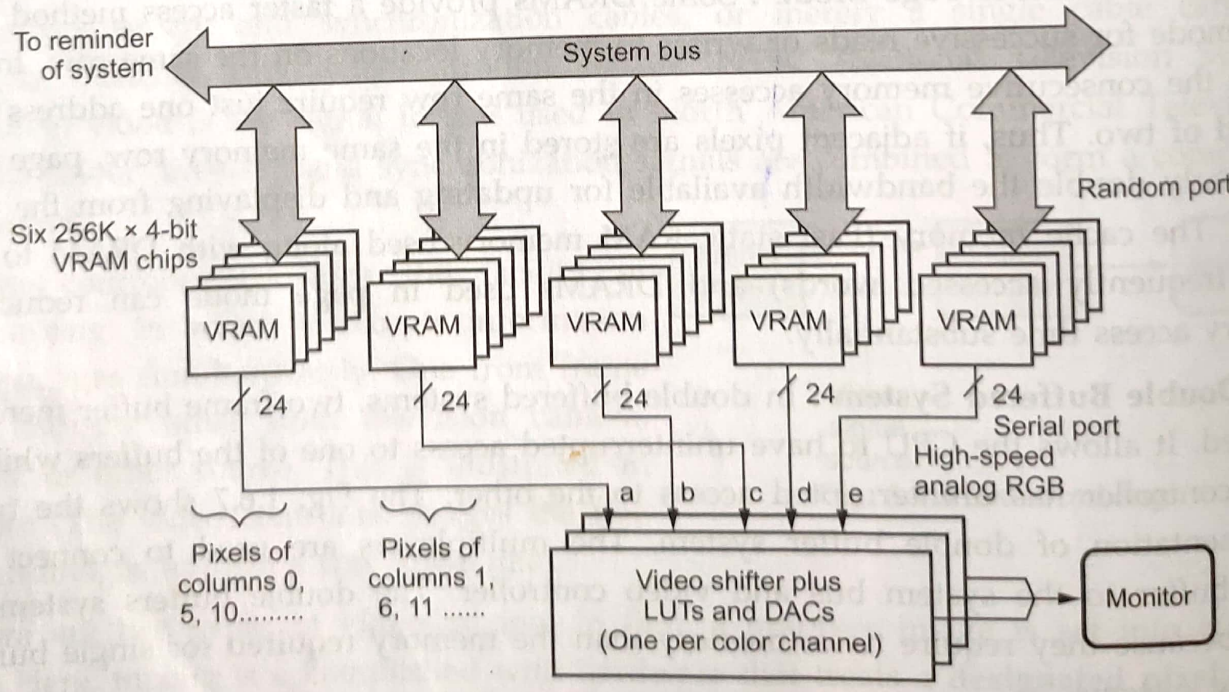

Fig. 1.6.8 Typical frame buffer organization using VRAMs

Resolm = Row × Colm.

Example 1.6.1 *How much time is spent in scanning across each row of pixels during screen refresh on a raster system with a resolution of 1280 by 1024 and a refresh rate of 60 frames per second. Assume horizontal and vertical retrace times are negligible.*

2009-10, Marks 5

Solution : Given : Resolution of raster system = 1280 × 1024

Refresh rate = 60 frames/sec.

Time required to scan each row of pixels = $\frac{1}{60 \times 1024}$ = **16.276 μs**

Example 1.6.2 *How much time is spent scanning across each row of pixels during screen refresh on a raster system with a resolution of 640 by 480 and a refresh rate of 60 frames per second ?*

Solution : Given : Resolution of raster system = 640 × 480

Refresh rate = 60 frames/sec.

Time required to scan each row of pixels = $\frac{1}{60 \times 480}$ = **34.72 μs.**

Example 1.6.3 *How long would it take to load a 1280 by 1024 frame buffer with 12 bits per pixel if transfer rate is 1 Mbps ?*

Solution :

Time required to load frame buffer = $\frac{1280 \times 1024 \times 12}{10^6}$ = **15.72864 sec**

Example 1.6.4 *How long would it take to load a 640 × 480 frame buffer with 12-bits per pixel, if 10^5 bits can be transferred per second.*

Solution :

Total time required to load frame buffer = $\frac{640 \times 480 \times 12}{10^5}$ = **36.864 sec.**

Example 1.6.5 *Consider a raster system with resolution of 1280 by 1024. What size of frame buffer is needed for given system to store 24 bits per pixel ? How many colors are possible in given system ? What is the access time per pixel if refreshing rate is 60 frames per second ?*

Solution : Size of frame buffer in bytes = $\frac{1280 \times 1024 \times 24}{8}$

= **3.93216×10^6 Bytes**

The possible colours in the system are :

$(2^8)^3 = 2^{24}$ = **16777216**

Access time per pixel = $\frac{1}{60 \times 1280 \times 1024}$ = **12.7156576 ns**

Example 1.6.6 *Consider a non-interlaced raster monitor with a resolution of n by m (m scan lines and n pixels per scan line), a refresh rate of r frames per second, a horizontal retrace time of t_{horiz} and vertical retrace time of t_{vert}. What is the fraction of total refresh time per frame spent in retrace of the electron beam ?*

Solution : Total refresh time per frame spent in retrace = $(m \times t_{horiz}) + t_{vert}$

Example 1.6.7 *What is the fraction of the total time per frame spent in retrace of electron beam for a non-interfaced raster system with resolution of 1280 × 1024, a refresh rate of 60 Hz, a horizontal retrace time of 5 micro seconds and a vertical retrace time of 500 micro seconds.*

Solution : Total time per frame = $\frac{1}{60}$ = 16.67 msec

Total refresh time per frame spent in retrace

$$= (1024 \times 5 \times 10^{-6}) + 500 \times 10^{-6} = \mathbf{5.62\ msec}$$

Fraction of the total time per frame spent in retrace

$$= \frac{5.62 \text{ msec}}{16.67 \text{ msec}} = \mathbf{0.337}$$

Example 1.6.8 *If a TV screen has 525 scan lines and an aspect ratio of 3 : 4, and if each pixel contains 8-bits worth of intensity information, how many bits per second are required to show 30 frames each second ?*

Solution : Given : 525 scan lines

∴ Vertical pixels = 525

Horizontal pixels = $\frac{4 \times 525}{3}$ = 700

∴ Resolution = 700 × 525

Number of bits per frame = $700 \times 525 \times 8 = \mathbf{2.94 \times 10^6}$

Number of bits required per second = $2.94 \times 10^6 \times 30$

= $\mathbf{88.2 \times 10^6}$

Example 1.6.9 *How much memory is needed for the frame butter to store a 640×400 display 16 gray levels ?* **2005-06, Marks 3**

Solution : $2^4 = 16$. Therefore, 4-bits are required to store 16 gray levels.

∴ Frame buffer memory = 640 × 400 × 4

= 1024000 bits = 128 kbytes

1.6.2 Raster Scan Display Processors

In some graphics systems a separate processor is used to interpret the commands in the display file. Such a processor is known as **display processor or display controller**. Display processor access the display information, processes it once during every refresh cycle.

In the raster scan display systems, the purpose of display processor is to free the CPU from the graphics routine task. Here, display processor is provided with separate memory area as shown in the Fig. 1.6.9. The main task of display processor is to digitize a picture definition given in an application program into a set of pixel-intensity values for storage in the frame buffer. This digitization process is known as scan conversion.

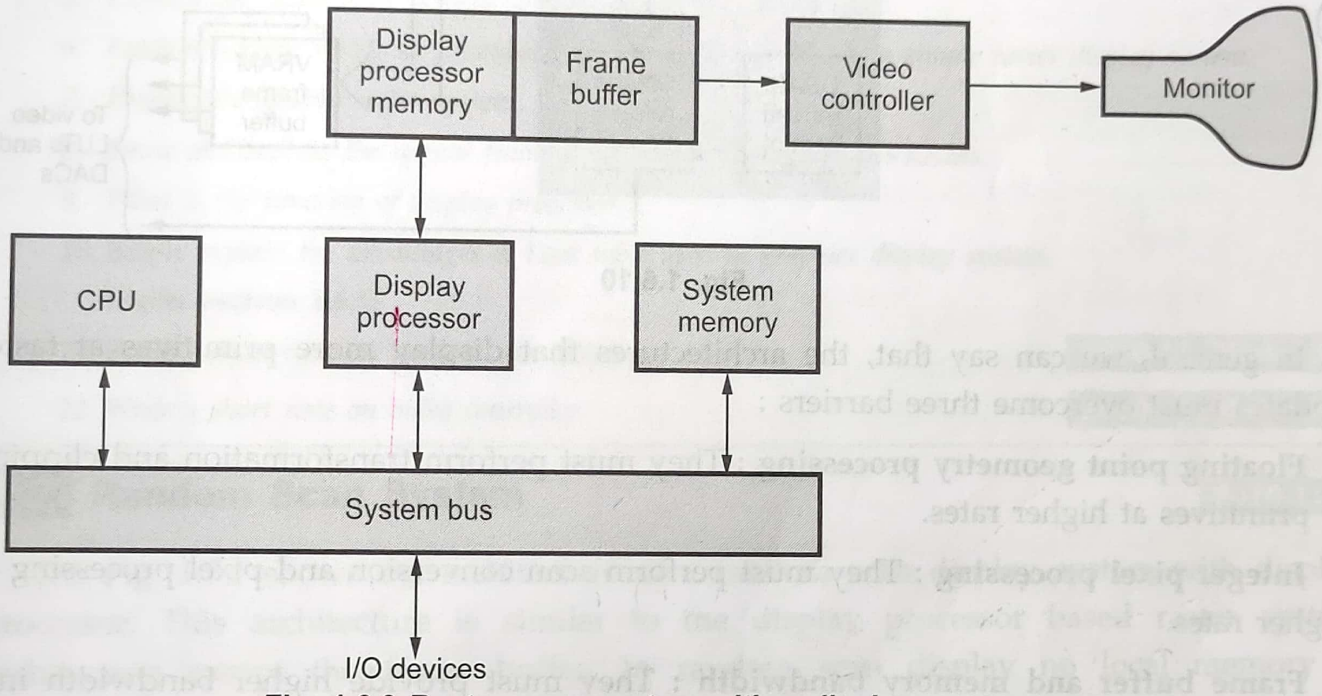

Fig. 1.6.9 Raster scan system with a display processor

Display processor are also designed to perform a number of additional operations. These operations include

- Generating various line styles (dashed, dotted, or solid)
- Display colour areas
- Performing certain transformations and
- Manipulations on displayed objects

The display processors are also known as graphics processors or peripheral processors. The TMS34020, a single chip graphics processor is used to accelerate 2D displays on PCs and workstations. It can be paired with a TMS34082 floating point coprocessor, which rapidly performs 3D geometric transformations and clipping needed for 3D graphics. The Fig. 1.6.10 shows a typical system configuration using TMS34020 graphics processor.

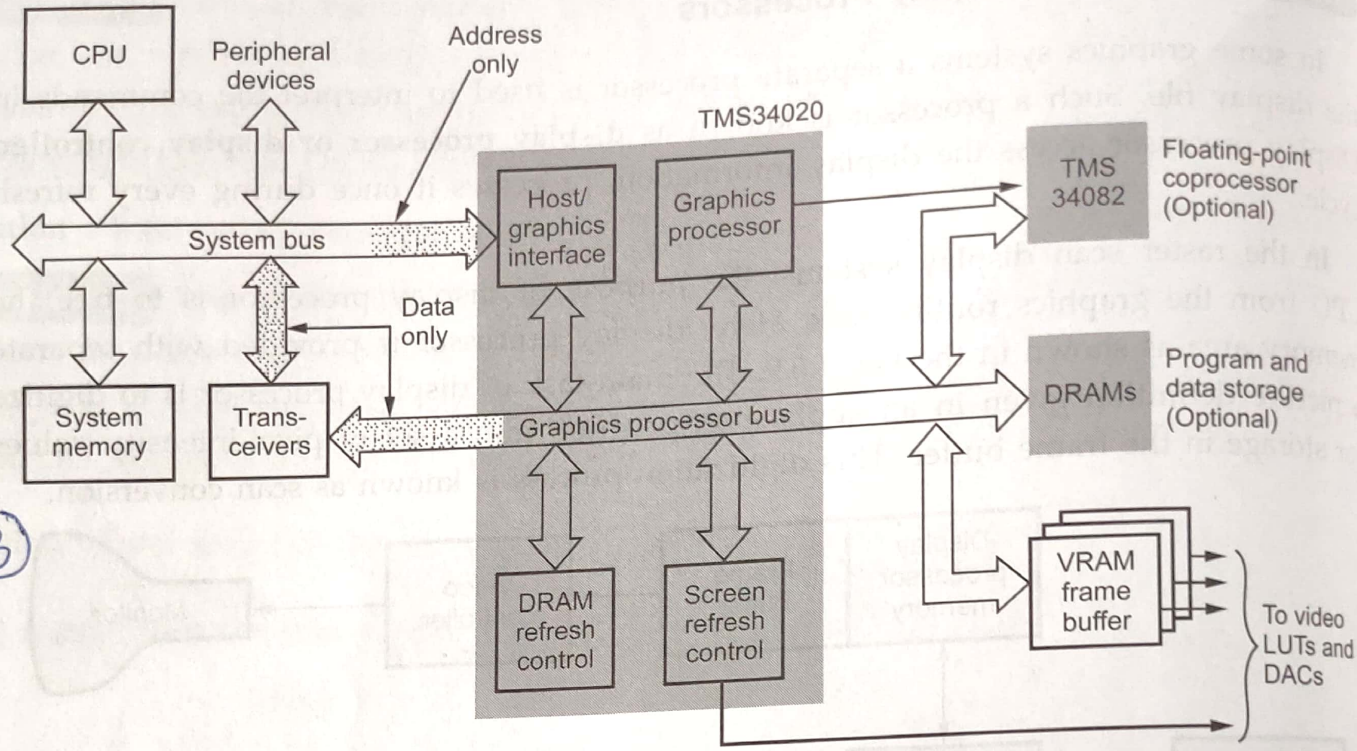

Fig. 1.6.10

In general, we can say that, the architectures that display more primitives at faster updates must overcome three barriers :

Floating point geometry processing : They must perform transformation and clipping of primitives at higher rates.

Integer pixel processing : They must perform scan conversion and pixel processing at higher rates.

Frame buffer and memory bandwidth : They must provide higher bandwidth into the frame buffer.

Example 1.6.10 *Consider a raster display system with resolution of 800 by 400. How many pixels could be accessed per second by a display controller that refreshes the screen at the rate of 60 frames per second ?*

Solution : Pixels could be accessed per second = 800 × 400 × 60

= **19,200,000**

Example 1.6.11 *Consider two raster systems with resolution of 640 × 480 and 1280 × 1024. How many pixels could be accessed per second in each of these systems by a display controller that refreshes the screen at a rate of 60 frames per second ?* **2009-10, Marks 5**

Solution : Raster system with resolution 640 × 480.

Pixels accessed per second = 640 × 480 × 60 = 18432000.

Raster system with resolution 1280 × 1024.

Pixels accessed per second = 1280 × 1024 × 60

= 78643200

Review Questions

1. *Explain the raster scan display system with video controller.*
2. *What is frame buffer ?*
3. *Write a note on frame buffer.* **2010-11, Marks 3**
4. *Draw and explain a 24-bit plane colour frame buffer.*
5. *Explain the raster scan display system with a display processor.*
6. *Explain various solutions provided to minimize the problems in simple raster display system.*
7. *Explain the double buffer system.*
8. *Draw and explain the typical frame buffer organization using VRAMs.*
9. *What is the function of display processor ?*
10. *Briefly explain the advantages of Look table used in graphics display system.* **(Refer section 1.6.1)**
11. *Write a short note on random scan display.* **2010-11, Marks 3**
12. *Write a short note on video controller.* **2010-11, Marks 3**

1.7 Random Scan System **2010-11**

The Fig. 1.7.1 shows the architecture of a random scan display system with display processor. This architecture is similar to the display processor based raster system architecture except the frame buffer. In random scan display no local memory is provided for scan conversion algorithms, since that functionality is typically implemented using PLAs (Programmable Logic Arrays) or microcode.

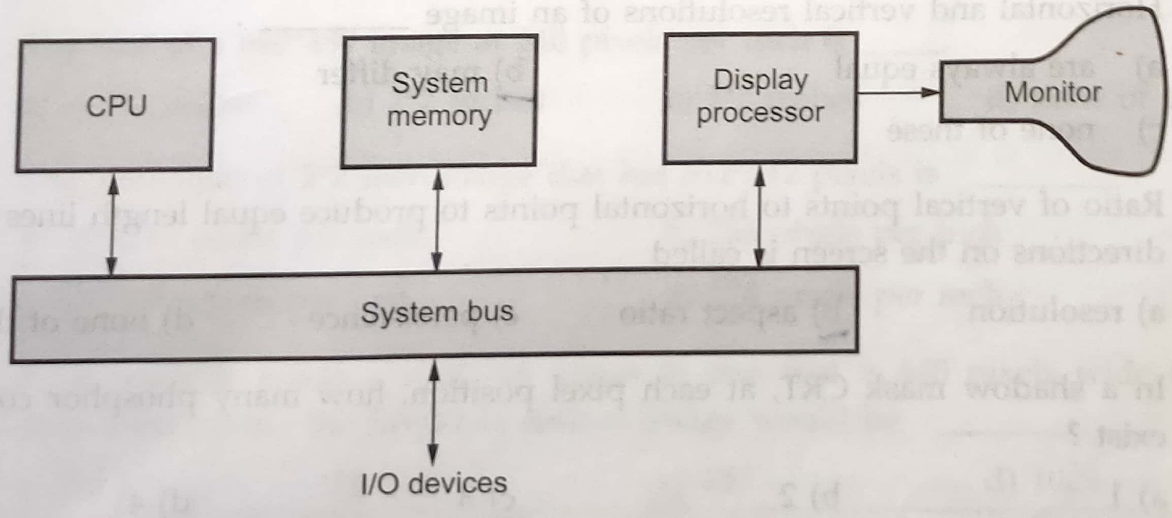

Fig. 1.7.1 Random scan display system

In random scan displays, the display processor has its own instruction set and instruction address register. Hence it is also called **display processing unit** (DPU) or **graphics controller.** It performs instruction fetch, decode and execute cycles found in any computer. To provide a flicker-free display without a pixmap the display processor has to execute its program 30 to 60 times per second. The program executed by the display processor and graphics package reside in the main memory. The main memory is shared by the general CPU and the display processor.

Review Questions

1. *Draw and explain the random scan display system.* **2010-11, Marks 3**
2. *Write a short note on random scan display.*

Multiple Choice Questions

Q.1 The process of determining pixel values from input geometric primitives is called _____ .

a) animation b) sampling c) rasterization d) scan-conversion

Q.2 The process of digitizing a picture definition given in an application program into a set of pixel-intensity values is called _____ .

a) animation b) sampling c) rasterization d) scan-conversion

Q.3 The process of representing continuous graphic objects as a collection of discrete pixels is called _____ .

a) animation b) rasterization c) scan conversion d) sampling

Q.4 The process of determining the appropriate pixels for representing picture or graphic object is called _____ .

Q.5 Horizontal and vertical resolutions of an image _____ .

a) are always equal b) may differ

c) none of these

Q.6 Ratio of vertical points to horizontal points to produce equal length lines in both directions on the screen is called _____ .

a) resolution b) aspect ratio c) persistence d) none of these

Q.7 In a shadow mask CRT, at each pixel position, how many phosphor color dots exist ?

a) 1 b) 2 c) 3 d) 4

Q.8 The role of flood gun in direct view storage tube (DVST) device is to _____.

a) maintain the picture display b) store picture pattern

c) provide the negative charge d) selectively erase the picture

Q.9 Most of the graphics monitors today operate as _____.

a) random scan b) zig-zag scan c) raster scan d) flood scan

Q.10 The size of frame buffer (video memory) depends on _____.

a) resolution only b) number of different colors only

c) both (a) and (b) d) computer type

Q.11 In random - scan displays, the refresh display file consists a set of ____.

a) line drawing commands b) pixel values

c) color codes d) Both a and c

Q.12 A pixel of black-white image or graphic object take space in memory _____ .

a) 1 bit b) 2 bits c) 1 nibble d) 1 byte

Q.13 A pixel of 256 gray-sale levels image or graphic object take space in memory _____ .

a) 1 bit b) 1 byte c) 1 nibble d) 3 byte

Q.14 The resolution of an image is _____ .

a) number of pixels per unit area

b) number of pixels per unit length in horizontal

c) number of pixels per unit length in vertical

d) none of these

Q.15 The size of a 640*480 image at 240 pixels per inch is _____.

a) 8/3*2 inches b) 2*2 inches c) 3*2 inches d) none of these

Q.16 The resolution of 2*2 inch image that has 512*512 pixels is _____ .

a) 256*256 pixels per inch b) 256 pixels per inch

c) 128*128 pixels per inch d) 128 pixels per inch

Q.17 If we want to resize a 1024*768 image to one that is 640 pixels wide with the same aspect ratio, the height of resized image would be _____ .

a) 768 b) 512 c) 480 d) 1024

Q.18 Persistence can be defined as _____.

a) intensity of a pixel
b) pixels per unit area
c) the duration of phosphorescence exhibited by a phosphor
d) number of pixels in an image

Q.19 The path the electron beam takes at the end of each refresh cycle is called ___.

a) horizontal retrace
b) vertical retrace
c) diagonal retrace
d) left to right retrace

Q.20 The path the electron beam takes when returning to the left side of the CRT screen is called _____.

a) horizontal retrace
b) vertical retrace
c) diagonal retrace
d) top to bottom retrace

Q.21 Frame buffer is used to store _____.

a) number of pixels in the image
b) intensities of pixels
c) image definition
d) co-ordinate values of image

Q.22 Raster system display a picture from a definition in a _____.

a) display file program
b) frame buffer
c) display controller
d) none of the above

Q.23 Shadow-mask methods are commonly used in _____.

a) raster-scan systems
b) LED
c) DVST
d) LCD

Q.24 Aspect ratio is generally defined as the ratio of the _____.

a) vertical to the horizontal points
b) horizontal to vertical points
c) vertical to (horizontal+ vertical) points
d) either a) or b), depending on the convention followed

Q.25 The clarity of a displayed image depends on the _____.

a) resolution
b) floating point precision of the system
c) associated software
d) aspect ratio

Q.26 Random-scan monitors are also referred to as _____.

a) vector display
b) stroke writing display
c) calligraphic display
d) none of the above

Q.27 Which statements about the beam penetration method for producing color display is /are true ?

a) It is used with raster scan monitors.

b) It is used with random scan monitors.

c) By using beam penetration method a wide range of colours can be obtained.

d) It uses three electron guns, one for each red, green and blue.

Q.28 The phenomenon of having a continuous glow of a beam on the screen even after it is removed is called as _____ .

a) fluorescence b) persistence c) phosphorescence d) incandescence

Q.29 Refreshing on raster scan displays is carried out at the rate of _____ .

a) 60 to 80 frames per sec b) 40 to 60 frames per sec

c) 30 to 60 frames per sec d) none of the above

Q.30 The amount of light emitted by the phosphor coating depends on the _____.

a) number of electrons striking the screen

b) speed of electrons striking the screen

c) distance from the cathode to the screen

d) none of the above

Q.31 The maximum number of points that can be displayed without overlap on a CRT is referred to as _____ .

a) resolution b) persistence

c) attenuation d) none of the above

Q.32 Gray scale is used in _____ .

a) monitors that have colour capability

b) monitors that have no colour capability

c) random scan displays d) none of the above

Q.33 Shadow mask methods produce _____ .

a) wider range of colors than beam penetration

b) smaller range of colors than beam penetration

c) equal number of colors as in beam penetration

d) none of the above

Q.34 Resolution is defined as _____ .

a) the number of pixels in the horizontal direction × The number pixels in the vertical direction

b) the number of pixels in the vertical direction × The number pixels in the horizontal direction

c) the number of pixels in the vertical direction + The number pixels in the horizontal direction

d) the number of pixels in the vertical direction / The number pixels in the horizontal direction

Q.35 Aspect ratio is _____ .

a) the ratio of image's height to its width

b) the ratio of image's width to its height

c) the ratio of window to viewport height

d) the ratio of image's intensity levels

Q.36 Refresh rate is _____ .

a) the rate at which the number of bit planes are accessed at a given time

b) the rate at which the picture is redrawn

c) the frequency at which the antialiasing takes place

d) the frequency at which the contents of the frame buffer is sent to the display monitor

Q.37 The distance between the pixels on a screen is called _____ .

a) OCR b) LCD c) dot pitch d) refresh rate

Q.38 _____ acts as anode in CRT.

a) The phosphorous coating b) The glass panel

c) The deflectors d) None of these

Q.39 The larger the number of pixels of a computer monitor, the higher its _____ .

a) resolution b) refresh rate

c) dot pitch d) data transfer rate

Q.40 The fastest type of printer is _____ .

a) dot-matrix printer b) inkjet printer

c) laser printer d) plotter

Q.41 The resolution of a printer is measured in terms of _____ .

a) pixel density b) dot pitch c) hertz d) dpi

Answers of Multiple Choice Questions

Q.1 [c]	Q.12 [a]	Q.23 [a]	Q.34 [a]
Q.2 [d]	Q.13 [b]	Q.24 [a]	Q.35 [a]
Q.3 [c]	Q.14 [a]	Q.25 [a]	Q.36 [d]
Q.4 [b]	Q.15 [a]	Q.26 [a]	Q.37 [c]
Q.5 [b]	Q.16 [a]	Q.27 [b]	Q.38 [a]
Q.6 [b]	Q.17 [c]	Q.28 [b]	Q.39 [a]
Q.7 [c]	Q.18 [c]	Q.29 [b]	Q.40 [c]
Q.8 [a]	Q.19 [b]	Q.30 [a]	Q.41 [d]
Q.9 [c]	Q.20 [a]	Q.31 [a]	
Q.10 [c]	Q.21 [b]	Q.32 [b]	
Q.11. [a]	Q.22 [b]	Q.33 [a]	

❑❑❑