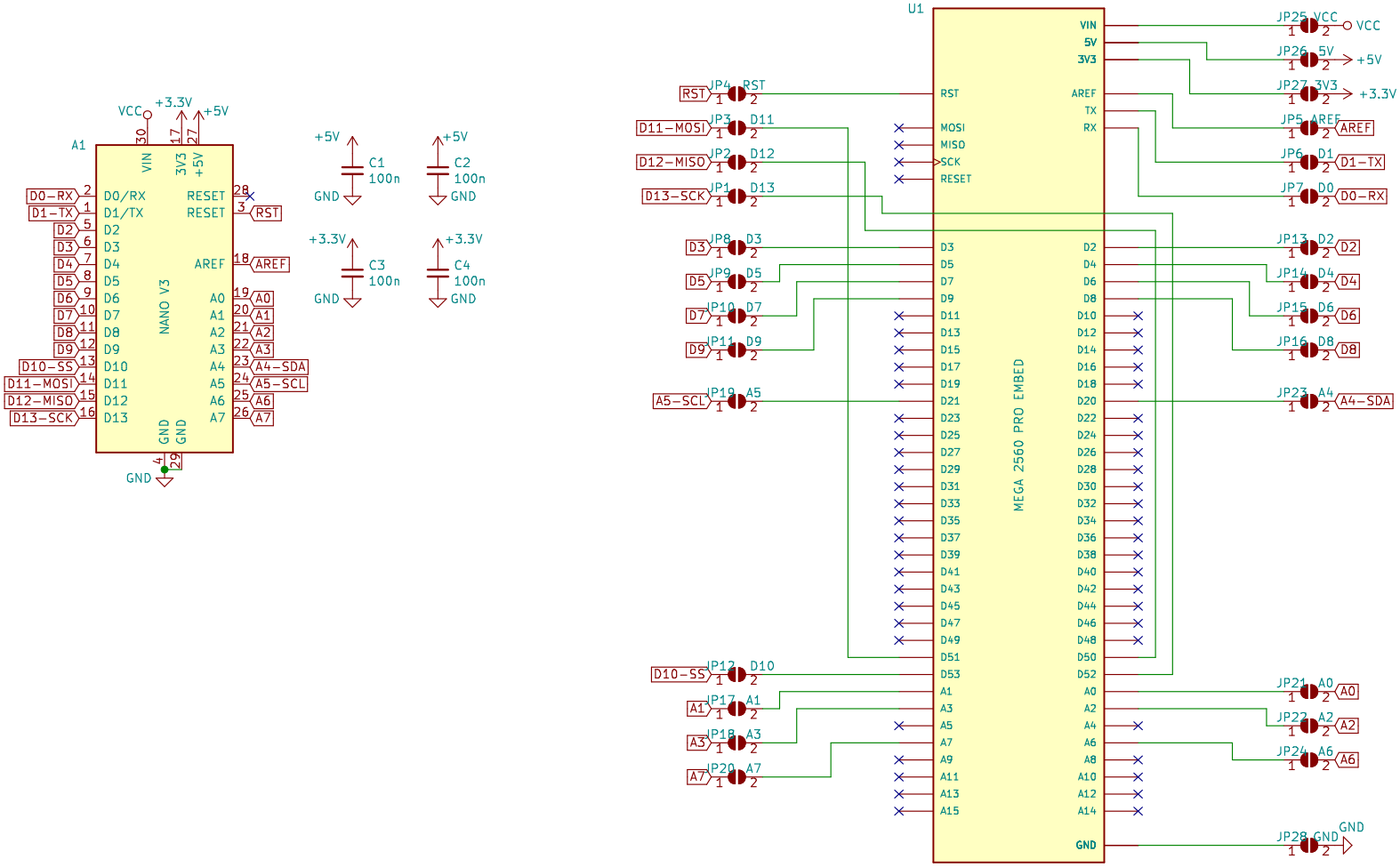

© 2021 Ruslan Nagimov

This source describes Open Hardware and is licensed under the CERN-OHL-W v2
You may redistribute and modify this documentation and make products using it under the terms of the CERN-OHL-W v2 (https:/cern.ch/cern-ohl). This documentation is distributed WITHOUT ANY EXPRESS OR IMPLIED WARRANTY, INCLUDING OF MERCHANTABILITY, SATISFACTORY QUALITY AND FITNESS FOR A PARTICULAR PURPOSE. Please see the CERN-OHL-W v2 for applicable conditions.

Source location: https://github.com/nagimov/mega2nano

As per CERN-OHL-W v2 section 4.1, should You produce hardware based on these sources, You must maintain the Source Location visible on the PCB or the external case of the product you make using this documentation.

Licensed under CERN-OHL-W v2 (https:/cern.ch/cern-ohl)
https://github.com/nagimov/mega2nano
© 2021 Ruslan Nagimov

Sheet: /
File: mega2nano.sch

Title: MEGA2NANO

Size: A4	Date: 2021-01-03	**Rev: 0.2**
KiCad E.D.A. kicad 5.0.2+dfsg1-1		Id: 1/1