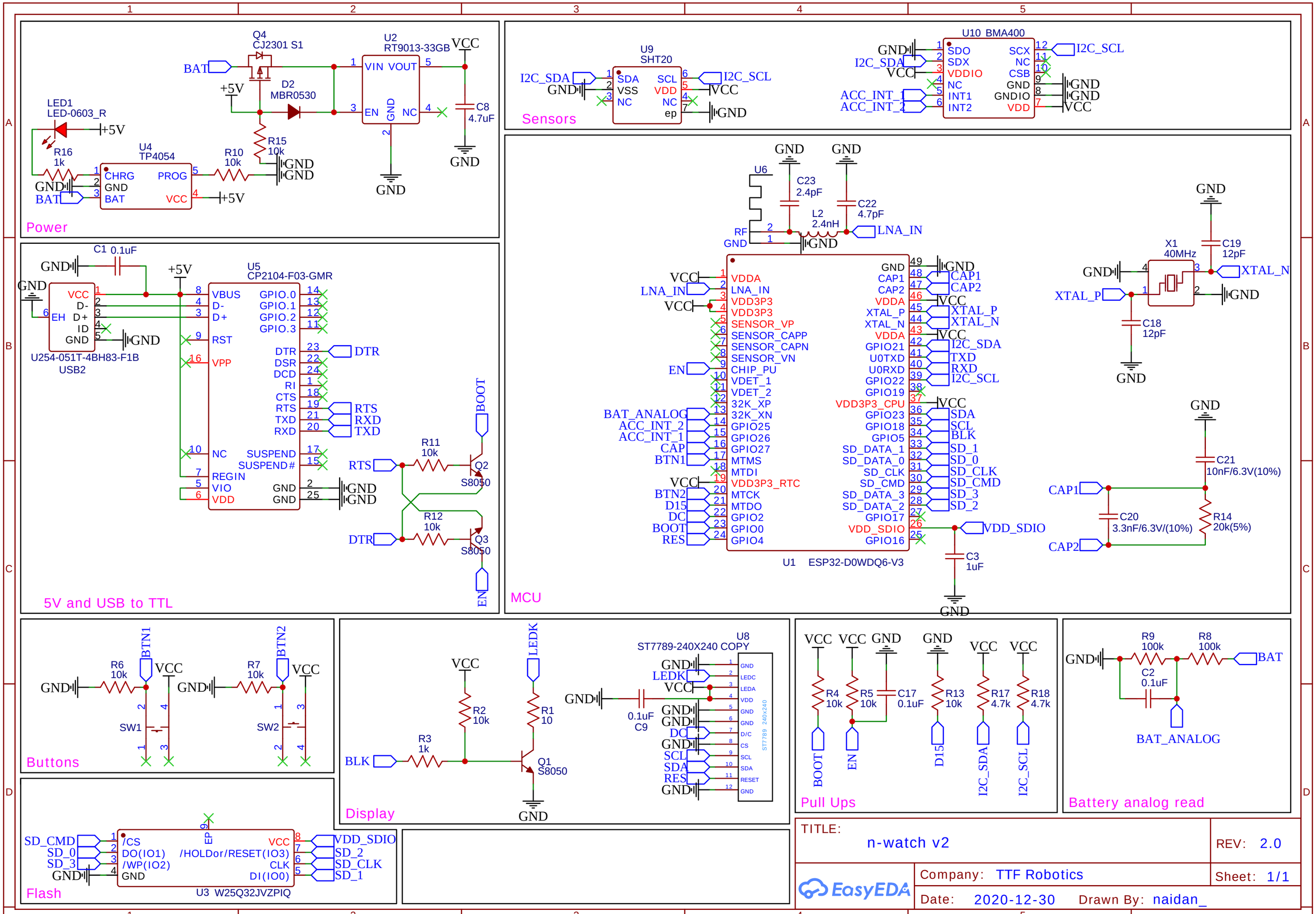
Power
Q4
CJ2301 S1
BAT
+5V
D2
MBR0530
U2
RT9013-33GB
VCC
VIN VOUT
EN GND NC
C8
4.7uF
GND
LED1
LED-0603_R
R16
1k
U4
TP4054
CHRG PROG
GND
BAT VCC
R10
10k
R15
10k
Sensors
U9
SHT20
I2C_SDA
I2C_SCL
SDA SCL
VSS VDD
NC NC
ep
U10 BMA400
SDO SCX
SDX NC
VDDIO CSB
NC GND
INT1 GNDIO
INT2 VDD
ACC_INT_1
ACC_INT_2
MCU
U6
C23
2.4pF
C22
4.7pF
L2
2.4nH
RF
LNA_IN
U1 ESP32-D0WDQ6-V3
VDDA
VDD3P3
SENSOR_VP
SENSOR_CAPP
SENSOR_CAPN
SENSOR_VN
CHIP_PU
VDET_1
VDET_2
32K_XP
32K_XN
GPIO25
GPIO26
GPIO27
MTMS
MTDI
VDD3P3_RTC
MTCK
MTDO
GPIO2
GPIO0
GPIO4
CAP1
CAP2
XTAL_P
XTAL_N
GPIO21
U0TXD
U0RXD
GPIO22
GPIO19
VDD3P3_CPU
GPIO23
GPIO18
GPIO5
SD_DATA_1
SD_DATA_0
SD_CLK
SD_CMD
SD_DATA_3
SD_DATA_2
GPIO17
VDD_SDIO
GPIO16
TXD
RXD
BLK
SD_1
SD_0
SD_3
SD_2
EN
BAT_ANALOG
BTN2
D15
DC
BOOT
RES
X1
40MHz
C19
12pF
C18
12pF
C21
10nF/6.3V(10%)
C20
3.3nF/6.3V/(10%)
R14
20k(5%)
C3
1uF
5V and USB to TTL
C1 0.1uF
U5
CP2104-F03-GMR
U254-051T-4BH83-F1B
USB2
VCC D-
D+ ID
EH GND
VBUS
RST
VPP
NC
SUSPEND
SUSPEND#
REGIN
VIO
VDD
GPIO.0
GPIO.1
GPIO.2
GPIO.3
DSR
DCD
RI
CTS
R11
10k
R12
10k
Q2
S8050
Q3
S8050
Buttons
R6
10k
R7
10k
BTN1
BTN2
SW1
SW2
Display
LEDK
R2
10k
R1
10
R3
1k
Q1
S8050
U8
ST7789-240X240 COPY
0.1uF
C9
LEDC
LEDA
D/C
CS
SCL
SDA
RESET
240x240
Flash
U3 W25Q32JVZPIQ
/CS
DO(IO1)
/WP(IO2)
/HOLDor/RESET(IO3)
CLK
DI(IO0)
EP
Pull Ups
R4
10k
R5
10k
C17
0.1uF
R13
10k
R17
4.7k
R18
4.7k
Battery analog read
R9
100k
R8
100k
C2
0.1uF
TITLE:
n-watch v2
REV: 2.0
Company: TTF Robotics
Sheet: 1/1
Date: 2020-12-30
Drawn By: naidan_
EasyEDA