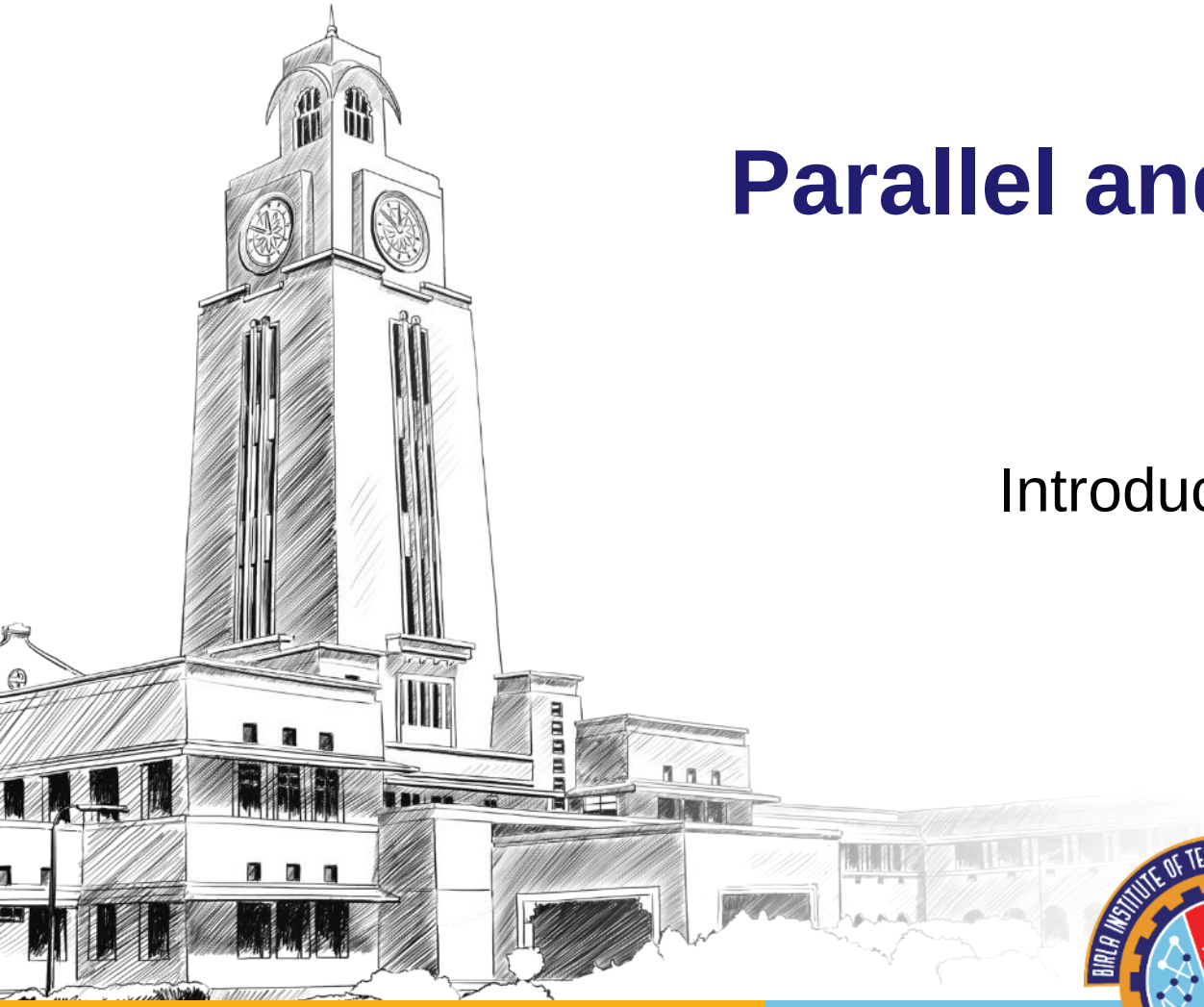

Introduction to
Parallel and Distributed Programming

CS3
Introduction to MPI

Saikishor Jangiti

Agenda

- Setting up a cluster of VMs
- Message Passing Interface
- Blocking / Non-blocking messages
- Data partitioning
- Lab2: Parallel and distributed data processing

Lab 2: Use cluster to distribute work and do some parallel data processing

- Now that you have a group of nodes managed as a cluster
  - Create a distributed data processing capability.
  - Master node takes a dataset and distributes / partitions the data on multiple active slaves that have enough resources.
  - Slaves process the data and send results back to Master. Master merges / reduces the data and reports back to the user.
  - Use blocking vs non-blocking messages in OpenMPI.
  - Status of the work at slaves is reported back to the master as work progresses and finishes.
  - Master collects the performance data (CPU, mem, IO) and stores it for analysis.
  - Any errors are also reported to the master.
  - Use compression to transfer data. Quantify communication cost - bytes sent over the network, latency of transfer.
  - Use OpenMPI for communication between nodes, zlib etc. compression libs
  - Handle a node crash - Master should get work done on remaining nodes. What are the options - should it restart the job or only shift part of the work to another node ? How is a slave crash detected ? Use the heartbeat mechanism.

Setting up a cluster of VMs (MPI Cluster)

- **Step 1: Configure your hosts file**
- hosts file is used by the device operating system to map hostnames to IP addresses.
- Example of a host file in **master**.

```
$ sudo nano /etc/hosts

#MPI CLUSTERS
172.20.36.120 manager
172.20.36.153 worker1
172.20.36.143 worker2
172.20.36.116 worker3
```

- For worker (**slave**) node
- Example of a host file for worker2

```
#MPI CLUSTER SETUP
172.20.36.120 manager
172.20.36.143 worker2
```

```
$ mpirun -hostfile /etc/hosts ./mpi_hello
```

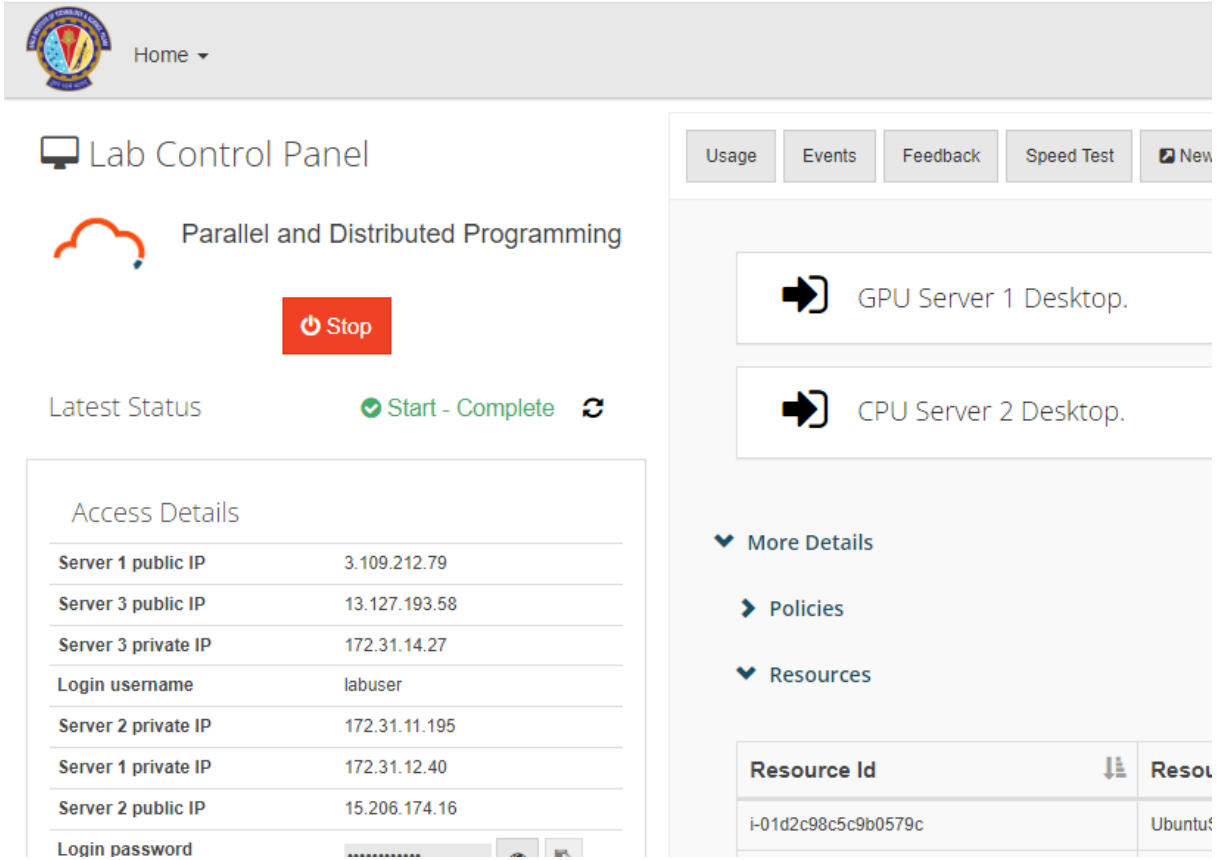

MPI (Message Passing Interface)

- A standard message passing specification for the vendors to implement
- Context: distributed memory parallel computers
  - Each processor has its own memory and cannot access the memory of other processors
  - Any data to be shared must be explicitly transmitted from one to another
- Most message passing programs use the *single program multiple data (SPMD)* model
  - Each processor executes the same set of instructions
  - Parallelization is achieved by letting each processor operation a different piece of data
  - MIMD (Multiple Instructions Multiple Data)

SPMD example

```
main(int argc, char **argv){
    if(process is assigned Master role){
      /* Assign work and coordinate workers and collect results */
      MasterRoutine(/*arguments*/);
    } else {  /* it is worker process */
      /* interact with master and other workers. Do the work and send
    results to the master*/
      WorkerRoutine(/*arguments*/);
    }
}
```

Why MPI?

- Small
  - Many programs can be written with only 6 basic functions
- Large
  - MPI’s extensive functionality from many functions
- Scalable
  - Point-to-point communication
- Flexible
  - Don’t need to rewrite parallel programs across platforms

MPI_INIT : Initiate an MPI computation.
MPI_FINALIZE : Terminate a computation.
MPI_COMM_SIZE : Determine number of processes.
MPI_COMM_RANK : Determine my process identifier.
MPI_SEND : Send a message.
MPI_RECV : Receive a message.

What we need to know…

Basic functions

Function	Description
int MPI_Init(int *argc, char **argv)	Initialize MPI
int MPI_Finalize()	Exit MPI
int MPI_Comm_size(MPI_Comm comm, int *size)	Determine number of processes within a comm
int MPI_Comm_rank(MPI_Comm comm, int *rank)	Determine process rank within a comm
int MPI_Send(void *buf, int count, MPI_Datatype datatype, int dest, int tag, MPI_Comm comm)	Send a message
int MPI_Recv(void *buf, int count, MPI_Datatype datatype, int src, int tag, MPI_Comm comm, MPI_Status *status)	Receive a message

Communicator

- An identifier associated with a group of processes
  - Each process has a unique rank within a specific communicator from 0 to (nprocesses-1)
  - Always required when initiating a communication by calling an MPI function
- Default: MPI_COMM_WORLD
  - Contains all processes
- Several communicators can co-exist
  - A process can belong to different communicators at the same time

Hello World

```
#include "mpi.h”
int main( int argc, char *argv[] ) {
    int nproc, rank;
    MPI_Init (&argc,&argv); /* Initialize MPI */

    MPI_Comm_size(MPI_COMM_WORLD,&nproc); /* Get Comm Size*/
    MPI_Comm_rank(MPI_COMM_WORLD,&rank); /* Get rank */

    printf(“Hello World from process %d\n”, rank);

    MPI_Finalize(); /* Finalize */
    return 0;
}
```

How to compile…

- Need to tell the compiler where to find the MPI include files and how to link to the MPI libraries.
- Fortunately, most MPI implementations come with scripts that take care of these issues:
  - mpicc mpi_code.c –o a.out
- Two widely used (and free) MPI implementations
  - MPICH (http://www-unix.mcs.anl.gov/mpi/mpich)
  - OPENMPI (http://www.openmpi.org)

Blocking Message Passing

- The call waits until the data transfer is done
  - The sending process waits until all data are transferred to the system buffer
  - The receiving process waits until all data are transferred from the system buffer to the receive buffer
  - Buffers can be freely reused

Blocking Message Send

```
MPI_Send (void *buf, int count, MPI_Datatype dtype, int dest, int tag,
    MPI_Comm comm);
```

- buf — Specifies the starting address of the buffer.
- count — Indicates the number of buffer elements
- dtype — Denotes the datatype of the buffer elements
- dest — Specifies the rank of the destination process in the group associated with the communicator comm
- tag — Denotes the message label
- comm — Designates the communication context that identifies a group of processes

Blocking Message Send

Standard (MPI_Send)	The sending process returns when the system can buffer the message or when the message is received and the buffer is ready for reuse.
Buffered (MPI_Bsend)	The sending process returns when the message is buffered in an application-supplied buffer.
Synchronous (MPI_Ssend)	The sending process returns only if a matching receive is posted and the receiving process has started to receive the message.
Ready (MPI_Rsend)	The message is sent as soon as possible.

Blocking Message Receive

```
MPI_Recv (void *buf, int count, MPI_Datatype dtype, int source, int tag,
    MPI_Comm comm, MPI_Status *status);
```

- buf — Specifies the starting address of the buffer.
- count — Indicates the number of buffer elements
- dtype — Denotes the datatype of the buffer elements
- source — Specifies the rank of the source process in the group associated with the communicator comm
- tag — Denotes the message label
- comm — Designates the communication context that identifies a group of processes
- status — Returns information about the received message

Example (from http://mpi.deino.net/mpi_functions/index.htm)

```
…
if (rank == 0) {
    for (i=0; i<10; i++)  buffer[i] = i;
    MPI_Send(buffer, 10, MPI_INT, 1, 123, MPI_COMM_WORLD);
} else if (rank == 1) {
    for (i=0; i<10; i++)  buffer[i] = -1;
    MPI_Recv(buffer, 10, MPI_INT, 0, 123, MPI_COMM_WORLD, &status);
    for (i=0; i<10; i++)
       if (buffer[i] != i)
         printf("Error: buffer[%d] = %d but is expected to be %d\n", i, buffer[i], i);
 }
…
```

Non-blocking Message Passing

- Returns immediately after the data transferred is initiated
- Allows to overlap computation with communication
- Need to be careful though
  - When send and receive buffers are updated before the transfer is over, the result will be wrong

Non-blocking Message Passing

```
MPI_Isend (void *buf, int count, MPI_Datatype dtype, int dest, int tag,
    MPI_Comm comm, MPI_Request *req);

MPI_Recv (void *buf, int count, MPI_Datatype dtype, int source, int tag,
    MPI_Comm comm, MPI_Request *req);

MPI_Wait(MPI_Request *req, MPI_Status *status);
```

- req — Specifies the request used by a completion routine when called by the application to complete the send operation.

Blocking	MPI_Send	MPI_Bsend	MPI_Ssend	MPI_Rsend	MPI_Recv
Non-blocking	MPI_Isend	MPI_Ibsend	MPI_Issend	MPI_Irsend	MPI_Irecv

Non-blocking Message Passing

```
…
right = (rank + 1) % nproc;
left = rank - 1;
if (left < 0)        left = nproc – 1;
MPI_Irecv(buffer, 10, MPI_INT, left, 123, MPI_COMM_WORLD, &request);
MPI_Isend(buffer2, 10, MPI_INT, right, 123, MPI_COMM_WORLD,
    &request2);
MPI_Wait(&request, &status);
MPI_Wait(&request2, &status);
…
```

How to execute MPI codes?

- The implementation supplies scripts to launch the MPI parallel calculation
  - mpirun –np #proc a.out
  - mpiexec –n #proc a.out

- A copy of the same program runs on each processor core within its own process (private address space)

- Communication
  - through the network interconnect in distributed memory
  - through the shared memory

Collective communications

- A single call handles the communication between all the processes in a communicator

- There are 3 types of collective communications
  - Data movement (e.g. MPI_Bcast)
  - Reduction (e.g. MPI_Reduce)
  - Synchronization (e.g. MPI_Barrier)

Broadcast

- int MPI_Bcast(void *buffer, int count, MPI_Datatype datatype, int root, MPI_Comm comm);
  - One process (root) sends data to all the other processes in the same communicator
  - Must be called by all the processes with the same arguments

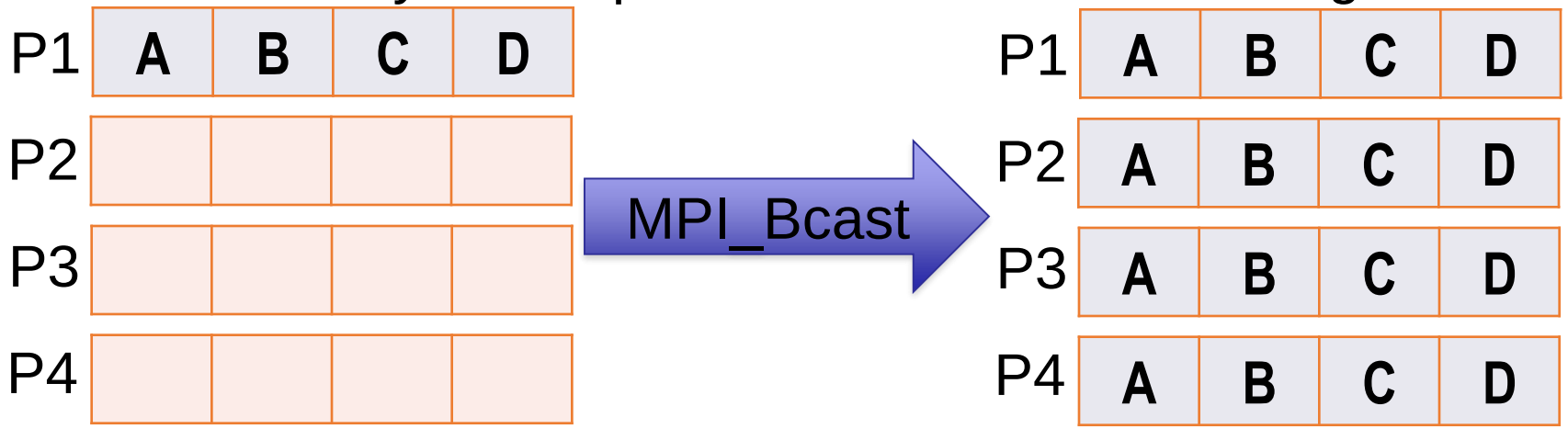

Gather

- int MPI_Gather(void *sendbuf, int sendcnt, MPI_Datatype sendtype, void *recvbuf, int recvcnt, MPI_Datatype recvtype, int root, MPI_Comm comm)
  - One process (root) collects data to all the other processes in the same communicator
  - Must be called by all the processes with the same arguments

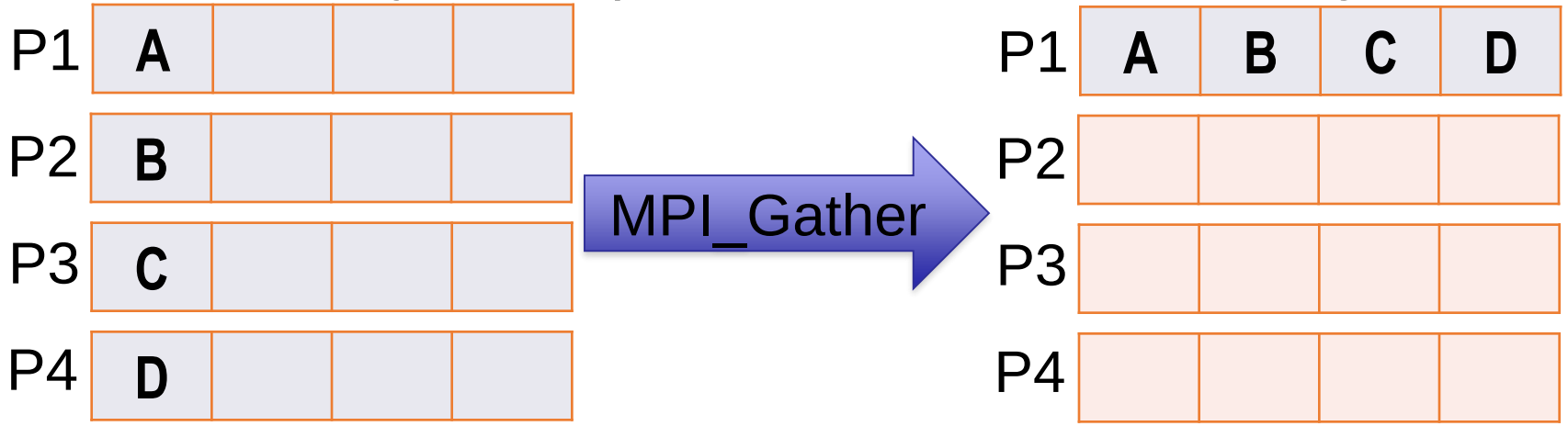

Gather to All

- int MPI_Allgather(void *sendbuf, int sendcnt, MPI_Datatype sendtype, void *recvbuf, int recvcnt, MPI_Datatype recvtype, MPI_Comm comm)
  - All the processes collects data to all the other processes in the same communicator
  - Must be called by all the processes with the same arguments

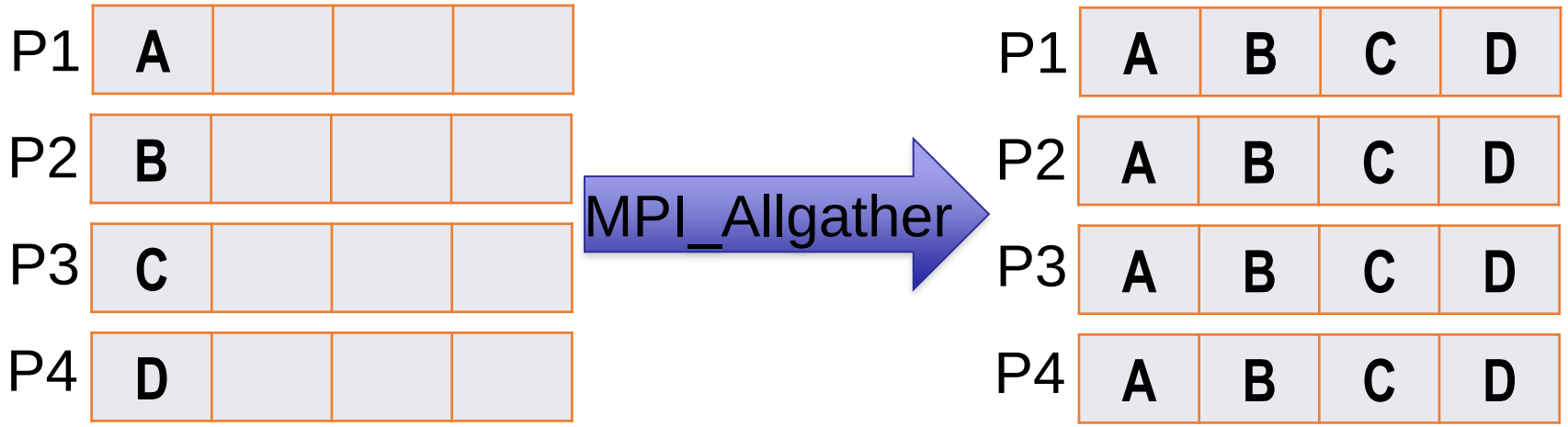

Reduction

- int MPI_Reduce(void *sendbuf, void *recvbuf, int count, MPI_Datatype datatype, MPI_Op op, int root, MPI_Comm comm)
  - One process (root) collects data to all the other processes in the same communicator, and performs an operation on the data
  - MPI_SUM, MPI_MIN, MPI_MAX, MPI_PROD, logical AND, OR, XOR, and a few more
  - MPI_Op_create(): User defined operator

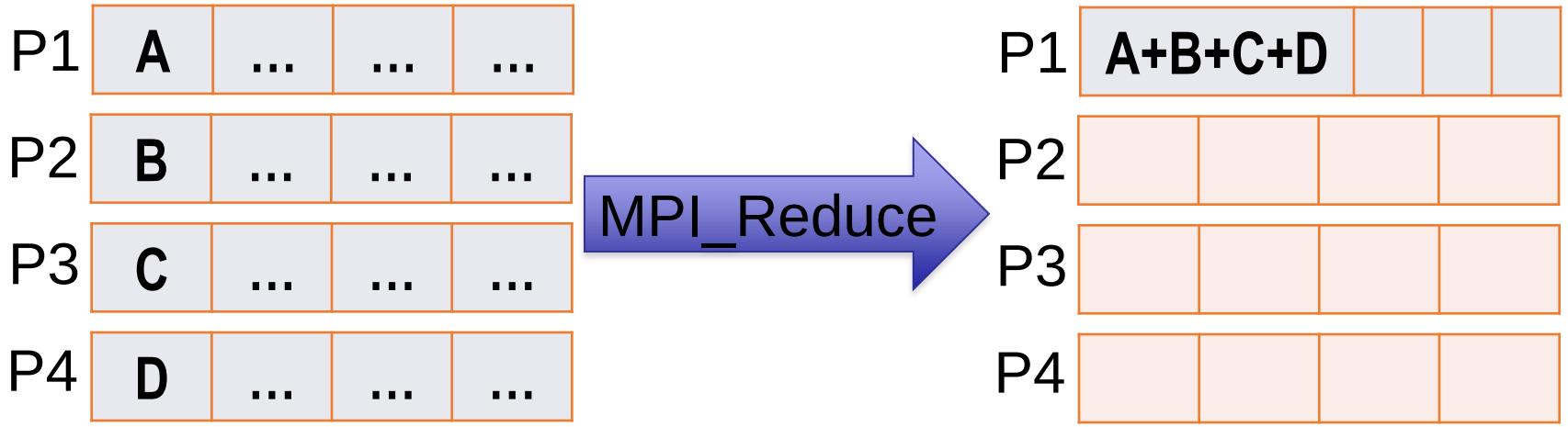

Reduction to All

- int MPI_Allreduce(void *sendbuf, void *recvbuf, int count, MPI_Datatype datatype, MPI_Op op, MPI_Comm comm)
  - All the processes collect data to all the other processes in the same communicator, and perform an operation on the data
  - MPI_SUM, MPI_MIN, MPI_MAX, MPI_PROD, logical AND, OR, XOR, and a few more
  - MPI_Op_create(): User defined operator

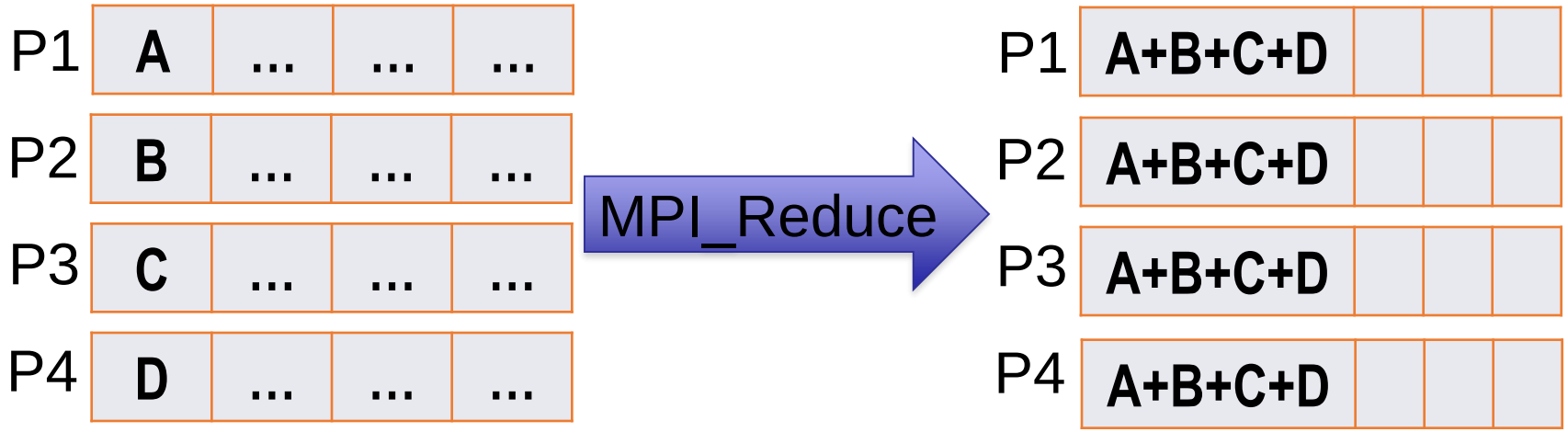

Synchronization

- **MPI_Barrier**
  - Blocks until all processes in the communicator have reached this routine.
  - A barrier is used when you want all the processes to complete a portion of code before continuing.
  - int MPI_Barrier(MPI_Comm comm)

```
 int solveProblem(int id, int numProcs)
{ sleep( ((double)id+1) / numProcs); return 42; }

int main(int argc, char** argv) {
 int id = -1, numProcesses = -1; double startTime = 0.0, totalTime = 0.0;
 int answer = 0.0; MPI_Init(&argc, &argv); MPI_Comm_rank(MPI_COMM_WORLD, &id);
 MPI_Comm_size(MPI_COMM_WORLD, &numProcesses);
 MPI_Barrier(MPI_COMM_WORLD);
if ( id == MASTER) { startTime = MPI_Wtime(); }
answer = solveProblem(id, numProcesses);
MPI_Barrier(MPI_COMM_WORLD);
if ( id == MASTER )
{ totalTime = MPI_Wtime() - startTime;
printf("\nThe answer is %d; computing it took %f secs.\n\n", answer, totalTime);
 }
MPI_Finalize();
return 0;
}
```

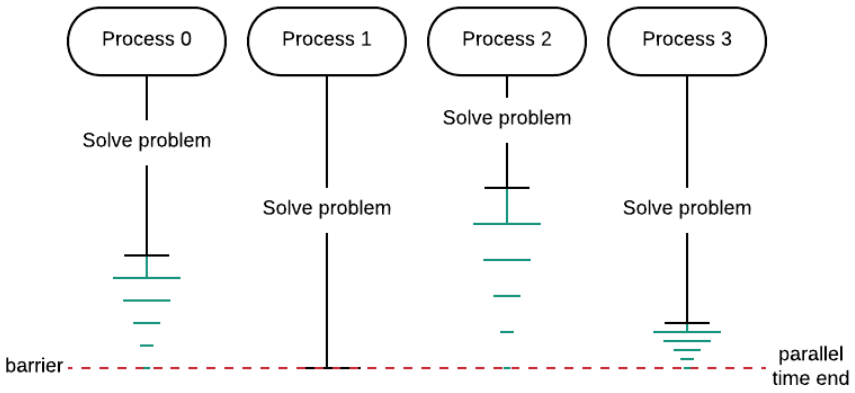

Reference : http://selkie.macalester.edu/csinparallel/modules/Patternlets/build/html/MessagePassing/Barrier_Tags.html

Data distributions

$$
\begin{aligned}
\mathbf{x}+\mathbf{y} &= (x_0, x_1, \ldots, x_{n-1}) + (y_0, y_1, \ldots, y_{n-1}) \\
&= (x_0 + y_0, x_1 + y_1, \ldots, x_{n-1} + y_{n-1}) \\
&= (z_0, z_1, \ldots, z_{n-1}) \\
&= \mathbf{z}
\end{aligned}
$$

Compute a vector sum.

Serial implementation of vector addition

```
void Vector_sum(double x[], double y[], double z[], int n) {
   int i;

   for (i = 0; i < n; i++)
      z[i] = x[i] + y[i];
}  /* Vector_sum */
```

Different partitions of a 12-component vector among 3 processes

Process	Components											
	Block				Cyclic				Block-cyclic Blocksize = 2			
0	0	1	2	3	0	3	6	9	0	1	6	7
1	4	5	6	7	1	4	7	10	2	3	8	9
2	8	9	10	11	2	5	8	11	4	5	10	11

Partitioning options

- Block partitioning
  - Assign blocks of consecutive components to each process.
- Cyclic partitioning
  - Assign components in a round robin fashion.
- Block-cyclic partitioning
  - Use a cyclic distribution of blocks of components.

Parallel implementation of vector addition

```
void Parallel_vector_sum(
        double  local_x[]  /* in  */,
        double  local_y[]  /* in  */,
        double  local_z[]  /* out */,
        int     local_n    /* in  */) {
    int local_i;

    for (local_i = 0; local_i < local_n; local_i++)
        local_z[local_i] = local_x[local_i] + local_y[local_i];
}  /* Parallel_vector_sum */
```

Scatter

- MPI_Scatter can be used in a function that reads in an entire vector on process 0 but only sends the needed components to each of the other processes.

```
int MPI_Scatter(
      void*          send_buf_p   /* in  */,
      int            send_count   /* in  */,
      MPI_Datatype   send_type    /* in  */,
      void*          recv_buf_p   /* out */,
      int            recv_count   /* in  */,
      MPI_Datatype   recv_type    /* in  */,
      int            src_proc     /* in  */,
      MPI_Comm       comm         /* in  */);
```

Reading and distributing a vector

```
void Read_vector(
      double    local_a[]   /* out */,
      int       local_n     /* in  */,
      int       n           /* in  */,
      char      vec_name[]  /* in  */,
      int       my_rank     /* in  */,
      MPI_Comm  comm        /* in  */) {

   double* a = NULL;
   int i;

   if (my_rank == 0) {
      a = malloc(n*sizeof(double));
      printf("Enter the vector %s\n", vec_name);
      for (i = 0; i < n; i++)
         scanf("%lf", &a[i]);
      MPI_Scatter(a, local_n, MPI_DOUBLE, local_a, local_n, MPI_DOUBLE,
            0, comm);
      free(a);
   } else {
      MPI_Scatter(a, local_n, MPI_DOUBLE, local_a, local_n, MPI_DOUBLE,
            0, comm);
   }
}  /* Read_vector */
```

Gather

- Collect all of the components of the vector onto process 0, and then process 0 can process all of the components.

```
int MPI_Gather(
        void*          send_buf_p   /* in  */,
        int            send_count   /* in  */,
        MPI_Datatype   send_type    /* in  */,
        void*          recv_buf_p   /* out */,
        int            recv_count   /* in  */,
        MPI_Datatype   recv_type    /* in  */,
        int            dest_proc    /* in  */,
        MPI_Comm       comm         /* in  */);
```

Print a distributed vector (1)

```
void Print_vector(
        double     local_b[]   /* in */,
        int        local_n     /* in */,
        int        n           /* in */,
        char       title[]     /* in */,
        int        my_rank     /* in */,
        MPI_Comm   comm        /* in */) {

    double* b = NULL;
    int i;
```

Print a distributed vector (2)

```
    if (my_rank == 0) {
        b = malloc(n*sizeof(double));
        MPI_Gather(local_b, local_n, MPI_DOUBLE, b, local_n, MPI_DOUBLE,
                0, comm);
        printf("%s\n", title);
        for (i = 0; i < n; i++)
            printf("%f ", b[i]);
        printf("\n");
        free(b);
    } else {
        MPI_Gather(local_b, local_n, MPI_DOUBLE, b, local_n, MPI_DOUBLE,
                0, comm);
    }
}  /* Print_vector */
```

Allgather

- Concatenates the contents of each process' send_buf_p and stores this in each process' recv_buf_p.
- As usual, recv_count is the amount of data being received from each process.

```
int MPI_Allgather(
      void*          send_buf_p   /* in  */,
      int            send_count   /* in  */,
      MPI_Datatype   send_type    /* in  */,
      void*          recv_buf_p   /* out */,
      int            recv_count   /* in  */,
      MPI_Datatype   recv_type    /* in  */,
      MPI_Comm       comm         /* in  */);
```

Matrix-vector multiplication

$A = (a_{ij})$ is an $m \times n$ matrix

$\mathbf{x}$ is a vector with n components

$\mathbf{y} = A\mathbf{x}$ is a vector with m components

$$y_i = a_{i0}x_0 + a_{i1}x_1 + a_{i2}x_2 + \cdots a_{i,n-1}x_{n-1}$$

i-th component of y

Dot product of the ith row of A with x.

Safety in MPI programs

- The MPI standard allows MPI_Send to behave in two different ways:
  - it can simply copy the message into an MPI managed buffer and return,
  - or it can block until the matching call to MPI_Recv starts.

Safety in MPI programs

- Many implementations of MPI set a threshold at which the system switches from buffering to blocking.
- Relatively small messages will be buffered by MPI_Send.
- Larger messages, will cause it to block.

Safety in MPI programs

- If the MPI_Send executed by each process blocks, no process will be able to start executing a call to MPI_Recv, and the program will hang or deadlock.

- Each process is blocked waiting for an event that will never happen.

(see pseudo-code)

Safety in MPI programs

- A program that relies on MPI provided buffering is said to be unsafe.

- Such a program may run without problems for various sets of input, but it may hang or crash with other sets.

MPI_Ssend

- An alternative to MPI_Send defined by the MPI standard.
- The extra “s” stands for synchronous and MPI_Ssend is guaranteed to block until the matching receive starts.

```
int MPI_Ssend(
      void*          msg_buf_p      /* in */,
      int            msg_size       /* in */,
      MPI_Datatype   msg_type       /* in */,
      int            dest           /* in */,
      int            tag            /* in */,
      MPI_Comm       communicator   /* in */);
```

Restructuring communication

```
MPI_Send(msg, size, MPI_INT, (my_rank+1) % comm_sz, 0, comm);
MPI_Recv(new_msg, size, MPI_INT, (my_rank+comm_sz−1) % comm_sz,
      0, comm, MPI_STATUS_IGNORE.
```

≡

```
if (my_rank % 2 == 0) {
   MPI_Send(msg, size, MPI_INT, (my_rank+1) % comm_sz, 0, comm);
   MPI_Recv(new_msg, size, MPI_INT, (my_rank+comm_sz−1) % comm_sz,
         0, comm, MPI_STATUS_IGNORE.
} else {
   MPI_Recv(new_msg, size, MPI_INT, (my_rank+comm_sz−1) % comm_sz,
         0, comm, MPI_STATUS_IGNORE.
   MPI_Send(msg, size, MPI_INT, (my_rank+1) % comm_sz, 0, comm);
}
```

MPI_Sendrecv

- An alternative to scheduling the communications ourselves.
- Carries out a blocking send and a receive in a single call.
- The dest and the source can be the same or different.
- Especially useful because MPI schedules the communications so that the program won’t hang or crash.

MPI_Sendrecv

```
int MPI_Sendrecv(
        void*          send_buf_p      /* in  */,
        int            send_buf_size   /* in  */,
        MPI_Datatype   send_buf_type   /* in  */,
        int            dest            /* in  */,
        int            send_tag        /* in  */,
        void*          recv_buf_p      /* out */,
        int            recv_buf_size   /* in  */,
        MPI_Datatype   recv_buf_type   /* in  */,
        int            source          /* in  */,
        int            recv_tag        /* in  */,
        MPI_Comm       communicator    /* in  */,
        MPI_Status*    status_p        /* in  */);
```

Safe communication with five processes

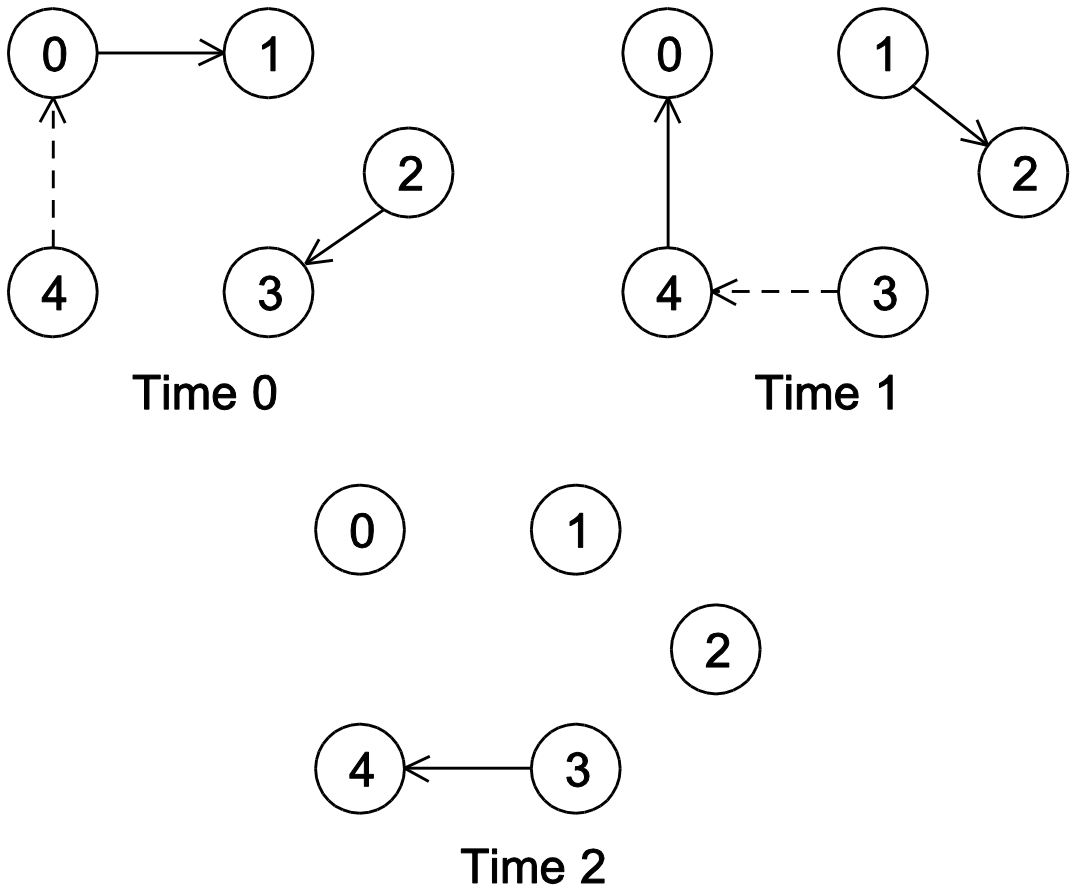

Parallel odd-even transposition sort

```
void Merge_low(
      int  my_keys[],      /* in/out    */
      int  recv_keys[],    /* in        */
      int  temp_keys[],    /* scratch   */
      int  local_n         /* = n/p, in */) {
   int m_i, r_i, t_i;

   m_i = r_i = t_i = 0;
   while (t_i < local_n) {
      if (my_keys[m_i] <= recv_keys[r_i]) {
         temp_keys[t_i] = my_keys[m_i];
         t_i++; m_i++;
      } else {
         temp_keys[t_i] = recv_keys[r_i];
         t_i++; r_i++;
      }
   }

   for (m_i = 0; m_i < local_n; m_i++)
      my_keys[m_i] = temp_keys[m_i];
}  /* Merge_low */
```

Run-times of parallel odd-even sort

Processes	Number of Keys (in thousands)				
	200	400	800	1600	3200
1	88	190	390	830	1800
2	43	91	190	410	860
4	22	46	96	200	430
8	12	24	51	110	220
16	7.5	14	29	60	130

(times are in milliseconds)

Thank You

- Extra slides follows

Outline

- Writing your first MPI program.
- Using the common MPI functions.
- Collective communication.
- MPI derived datatypes.
- Performance evaluation of MPI programs.
- Parallel sorting.
- Safety in MPI programs.

A distributed memory system

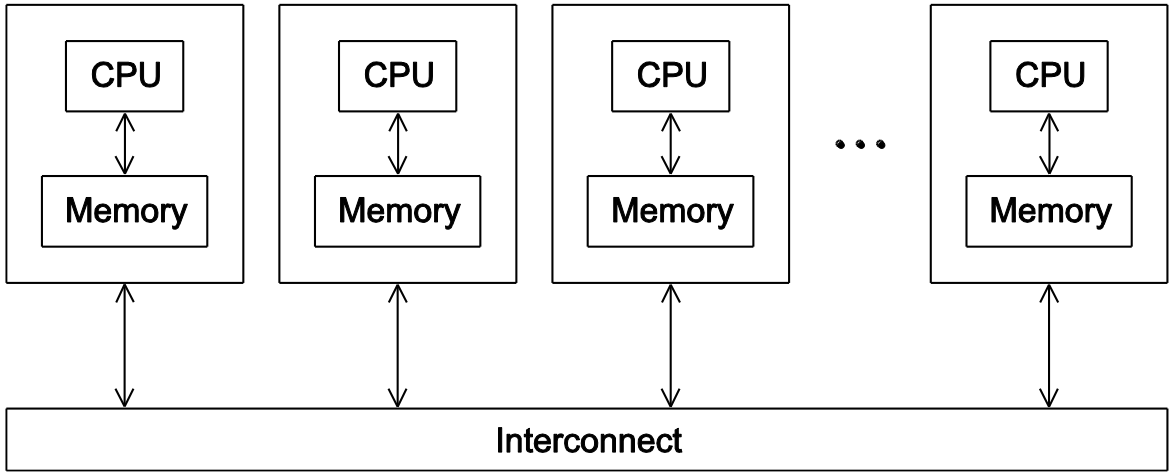

A shared memory system

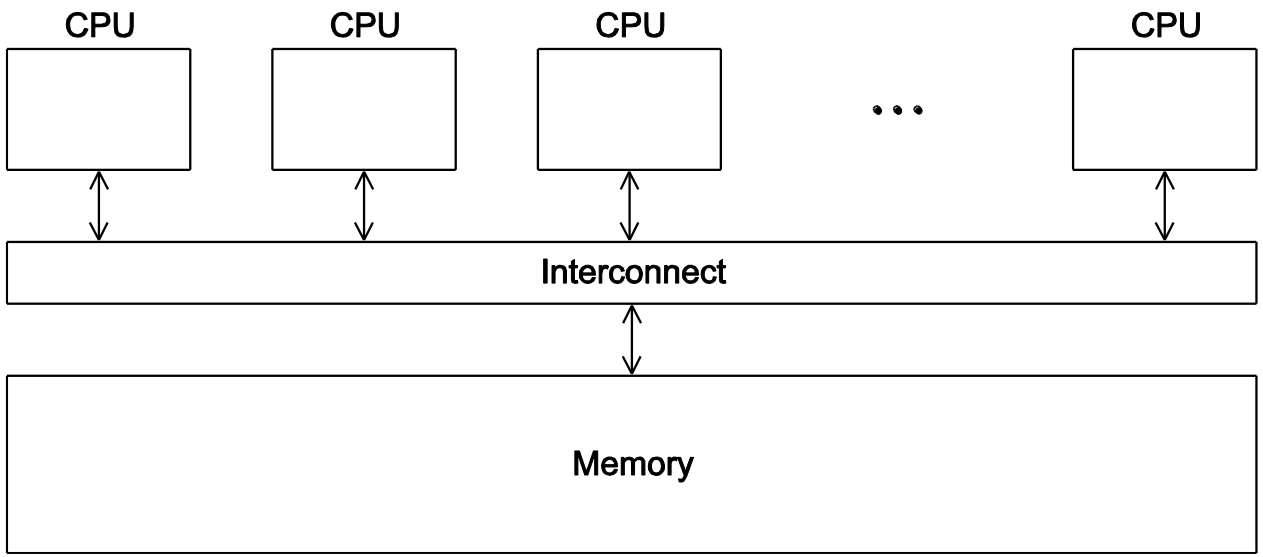

Hello World!

```
#include <stdio.h>

int main(void) {
    printf("hello, world\n");

    return 0;
}
```

(a classic)

Identifying MPI processes

- Common practice to identify processes by nonnegative integer ranks.
- *p* processes are numbered *0, 1, 2, .. p-1*

Our first MPI program

```c
#include <stdio.h>
#include <string.h>  /* For strlen             */
#include <mpi.h>     /* For MPI functions, etc */

const int MAX_STRING = 100;

int main(void) {
   char       greeting[MAX_STRING];
   int        comm_sz;  /* Number of processes */
   int        my_rank;  /* My process rank     */

   MPI_Init(NULL, NULL);
   MPI_Comm_size(MPI_COMM_WORLD, &comm_sz);
   MPI_Comm_rank(MPI_COMM_WORLD, &my_rank);

   if (my_rank != 0) {
      sprintf(greeting, "Greetings from process %d of %d!",
            my_rank, comm_sz);
      MPI_Send(greeting, strlen(greeting)+1, MPI_CHAR, 0, 0,
            MPI_COMM_WORLD);
   } else {
      printf("Greetings from process %d of %d!\n", my_rank, comm_sz);
      for (int q = 1; q < comm_sz; q++) {
         MPI_Recv(greeting, MAX_STRING, MPI_CHAR, q,
            0, MPI_COMM_WORLD, MPI_STATUS_IGNORE);
         printf("%s\n", greeting);
      }
   }

   MPI_Finalize();
   return 0;
}  /* main */
```

Compilation

wrapper script to compile

source file

```
mpicc  -g  -Wall  -o  mpi_hello  mpi_hello.c
```

produce debugging information

create this executable file name (as opposed to default a.out)

turns on all warnings

Execution

mpiexec -n <number of processes> <executable>

---

mpiexec -n 1 ./mpi_hello

run with 1 process

mpiexec -n 4 ./mpi_hello

run with 4 processes

Execution

```
mpiexec  -n  1  ./mpi_hello
```

Greetings from process 0 of 1 !

```
mpiexec  -n  4  ./mpi_hello
```

Greetings from process 0 of 4 !
Greetings from process 1 of 4 !
Greetings from process 2 of 4 !
Greetings from process 3 of 4 !

MPI Programs

- Written in C.
  - Has main.
  - Uses stdio.h, string.h, etc.
- Need to add mpi.h header file.
- Identifiers defined by MPI start with “MPI_”.
- First letter following underscore is uppercase.
  - For function names and MPI-defined types.
  - Helps to avoid confusion.

MPI Components

- MPI_Init
  - Tells MPI to do all the necessary setup.

```
int MPI_Init(
        int*      argc_p  /* in/out */,
        char***   argv_p  /* in/out */);
```

- MPI_Finalize
  - Tells MPI we're done, so clean up anything allocated for this program.

```
int MPI_Finalize(void);
```

Basic Outline

```
. . .
#include <mpi.h>
. . .
int main(int argc, char* argv[]) {
    . . .
    /* No MPI calls before this */
    MPI_Init(&argc, &argv);
    . . .
    MPI_Finalize();
    /* No MPI calls after this */
    . . .
    return 0;
}
```

Communicators

- A collection of processes that can send messages to each other.
- MPI_Init defines a communicator that consists of all the processes created when the program is started.

- Called MPI_COMM_WORLD.

Communicators

```
int MPI_Comm_size(
      MPI_Comm   comm          /* in  */,
      int*       comm_sz_p     /* out */);
```

number of processes in the communicator

```
int MPI_Comm_rank(
      MPI_Comm   comm          /* in  */,
      int*       my_rank_p     /* out */);
```

my rank
(the process making this call)

SPMD

- Single-Program Multiple-Data
- We compile <u>one</u> program.
- Process 0 does something different.
  - Receives messages and prints them while the other processes do the work.

- The if-else construct makes our program SPMD.

Communication

```
int MPI_Send(
    void*          msg_buf_p      /* in */,
    int            msg_size       /* in */,
    MPI_Datatype   msg_type       /* in */,
    int            dest           /* in */,
    int            tag            /* in */,
    MPI_Comm       communicator   /* in */);
```

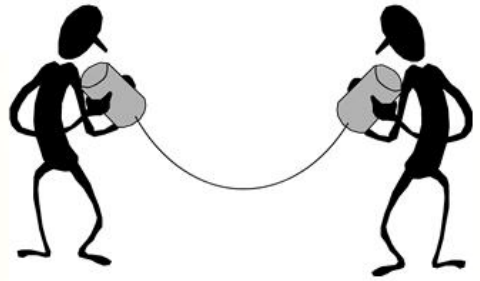

Data types

MPI datatype	C datatype
MPI_CHAR	signed char
MPI_SHORT	signed short int
MPI_INT	signed int
MPI_LONG	signed long int
MPI_LONG_LONG	signed long long int
MPI_UNSIGNED_CHAR	unsigned char
MPI_UNSIGNED_SHORT	unsigned short int
MPI_UNSIGNED	unsigned int
MPI_UNSIGNED_LONG	unsigned long int
MPI_FLOAT	float
MPI_DOUBLE	double
MPI_LONG_DOUBLE	long double
MPI_BYTE	
MPI_PACKED	

Communication

```
int MPI_Recv(
        void*          msg_buf_p       /* out */,
        int            buf_size        /* in  */,
        MPI_Datatype   buf_type        /* in  */,
        int            source          /* in  */,
        int            tag             /* in  */,

        MPI_Comm       communicator    /* in  */,
        MPI_Status*    status_p        /* out */);
```

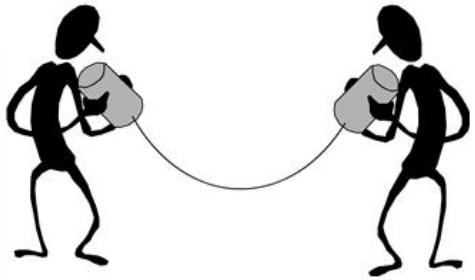

Message matching

```
MPI_Send(send_buf_p, send_buf_sz, send_type, dest, send_tag,
         send_comm);
```

r

MPI_Send

src = q

MPI_Recv

dest = r

```
MPI_Recv(recv_buf_p, recv_buf_sz, recv_type, src, recv_tag,
         recv_comm, &status);
```

q

Receiving messages

- A receiver can get a message without knowing:
  - the amount of data in the message,
  - the sender of the message,
  - or the tag of the message.

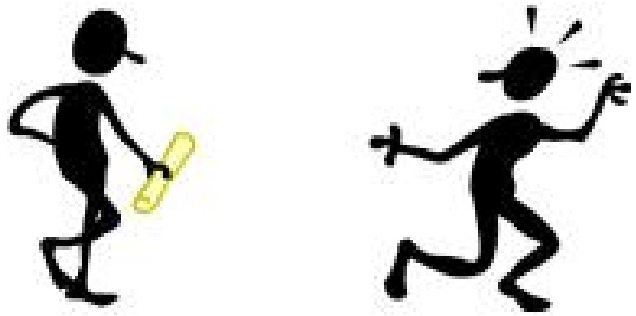

status_p argument

```
MPI_Recv(recv_buf_p, recv_buf_sz, recv_type, src, recv_tag,
         recv_comm, &status);
```

MPI_Status*

MPI_Status* status;

status.MPI_SOURCE

status.MPI_TAG

MPI_SOURCE

MPI_TAG

MPI_ERROR

How much data am I receiving?

```
int MPI_Get_count(
        MPI_Status*   status_p   /* in  */,
        MPI_Datatype  type       /* in  */,
        int*          count_p    /* out */);
```

Issues with send and receive

- Exact behavior is determined by the MPI implementation.
- MPI_Send may behave differently with regard to buffer size, cutoffs and blocking.
- MPI_Recv always blocks until a matching message is received.
- Know your implementation;
  don’t make assumptions!

Input

- Most MPI implementations only allow process 0 in MPI_COMM_WORLD access to stdin.
- Process 0 must read the data (scanf) and send to the other processes.

```
. . .
MPI_Comm_rank(MPI_COMM_WORLD, &my_rank);
MPI_Comm_size(MPI_COMM_WORLD, &comm_sz);

Get_data(my_rank, comm_sz, &a, &b, &n);

h = (b-a)/n;
. . .
```

Function for reading user input

```
void Get_input(
      int       my_rank   /* in  */,
      int       comm_sz   /* in  */,
      double*   a_p       /* out */,
      double*   b_p       /* out */,
      int*      n_p       /* out */) {
   int dest;

   if (my_rank == 0) {
      printf("Enter a, b, and n\n");
      scanf("%lf %lf %d", a_p, b_p, n_p);
      for (dest = 1; dest < comm_sz; dest++) {
         MPI_Send(a_p, 1, MPI_DOUBLE, dest, 0, MPI_COMM_WORLD);
         MPI_Send(b_p, 1, MPI_DOUBLE, dest, 0, MPI_COMM_WORLD);
         MPI_Send(n_p, 1, MPI_INT, dest, 0, MPI_COMM_WORLD);
      }
   } else { /* my_rank != 0 */
      MPI_Recv(a_p, 1, MPI_DOUBLE, 0, 0, MPI_COMM_WORLD,
            MPI_STATUS_IGNORE);
      MPI_Recv(b_p, 1, MPI_DOUBLE, 0, 0, MPI_COMM_WORLD,
            MPI_STATUS_IGNORE);
      MPI_Recv(n_p, 1, MPI_INT, 0, 0, MPI_COMM_WORLD,
            MPI_STATUS_IGNORE);
   }
}  /* Get_input */
```

Collective communication

Tree-structured communication

1. In the first phase:
   (a) Process 1 sends to 0, 3 sends to 2, 5 sends to 4, and 7 sends to 6.
   (b) Processes 0, 2, 4, and 6 add in the received values.
   (c) Processes 2 and 6 send their new values to processes 0 and 4, respectively.
   (d) Processes 0 and 4 add the received values into their new values.

2. (a) Process 4 sends its newest value to process 0.
   (b) Process 0 adds the received value to its newest value.

A tree-structured global sum

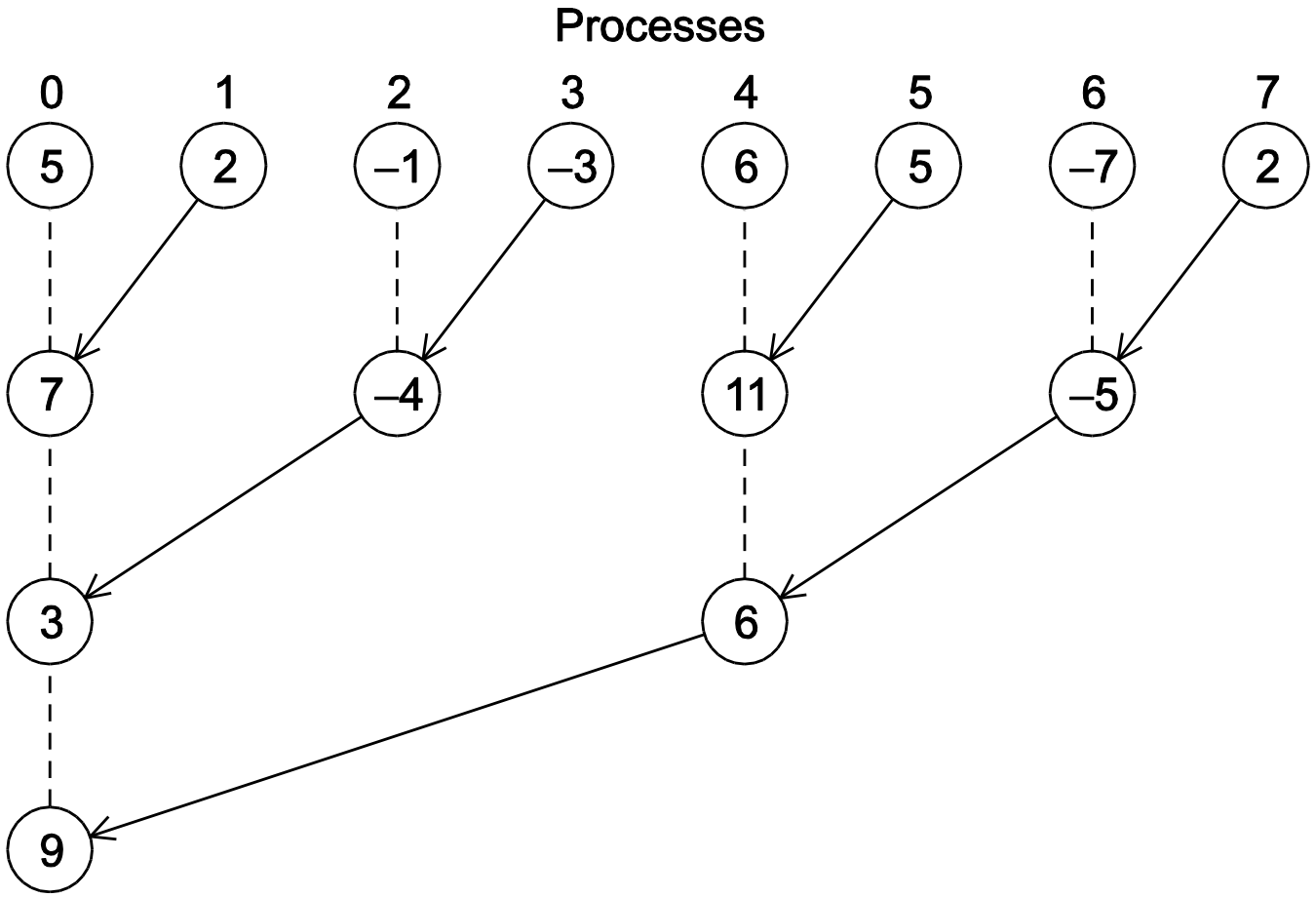

An alternative tree-structured global sum

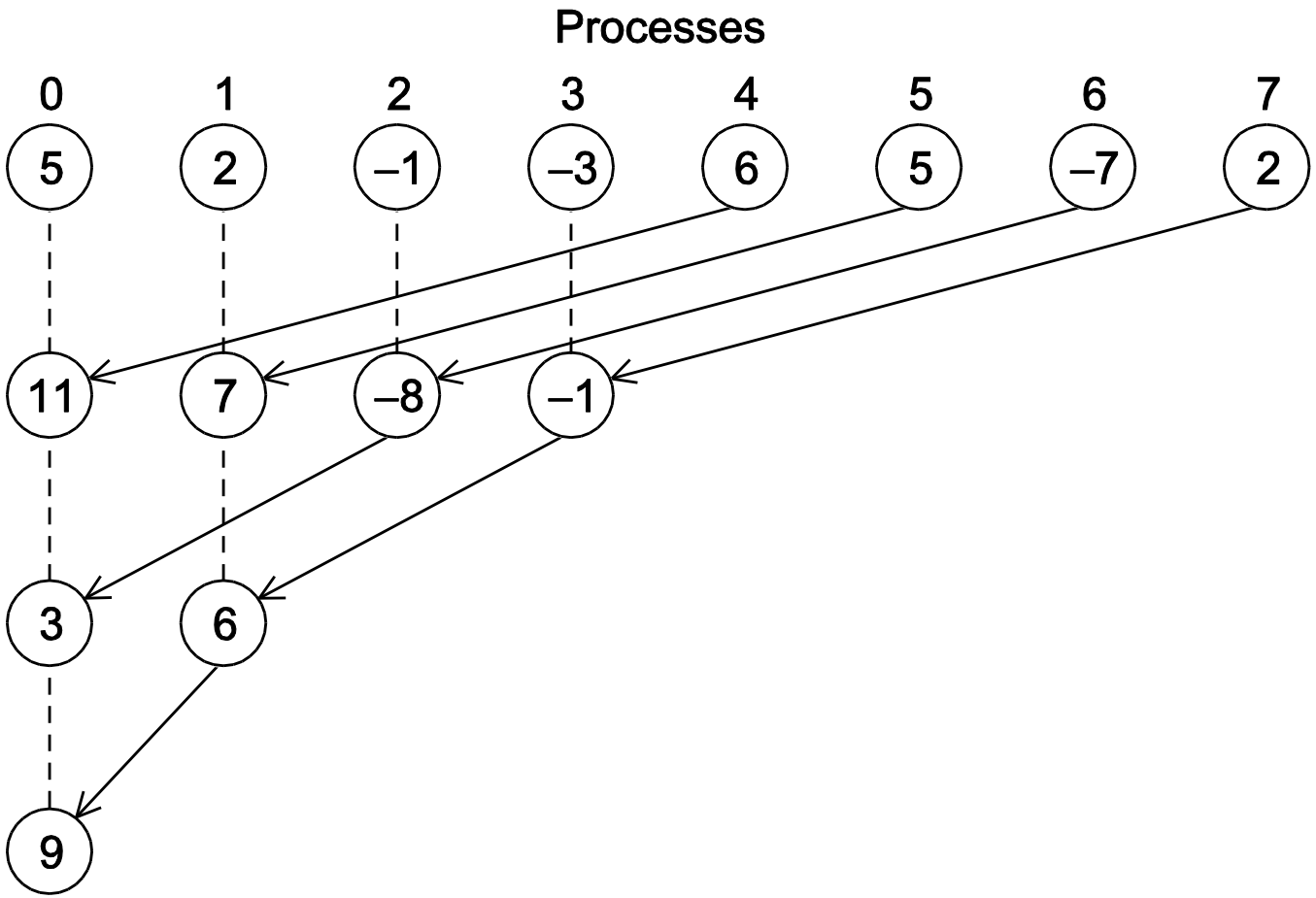

MPI_Reduce

```
int MPI_Reduce(
        void*          input_data_p    /* in  */,
        void*          output_data_p   /* out */,
        int            count           /* in  */,
        MPI_Datatype   datatype        /* in  */,
        MPI_Op         operator        /* in  */,
        int            dest_process    /* in  */,
        MPI_Comm       comm            /* in  */);
```

```
MPI_Reduce(&local_int, &total_int, 1, MPI_DOUBLE, MPI_SUM, 0,
      MPI_COMM_WORLD);
```

```
double local_x[N], sum[N];
. . .
MPI_Reduce(local_x, sum, N, MPI_DOUBLE, MPI_SUM, 0,
      MPI_COMM_WORLD);
```

Predefined reduction operators in MPI

Operation Value	Meaning
MPI_MAX	Maximum
MPI_MIN	Minimum
MPI_SUM	Sum
MPI_PROD	Product
MPI_LAND	Logical and
MPI_BAND	Bitwise and
MPI_LOR	Logical or
MPI_BOR	Bitwise or
MPI_LXOR	Logical exclusive or
MPI_BXOR	Bitwise exclusive or
MPI_MAXLOC	Maximum and location of maximum
MPI_MINLOC	Minimum and location of minimum

Collective vs. Point-to-Point Communications

- All the processes in the communicator must call the same collective function.

- For example, a program that attempts to match a call to MPI_Reduce on one process with a call to MPI_Recv on another process is erroneous, and, in all likelihood, the program will hang or crash.

Collective vs. Point-to-Point Communications

- The arguments passed by each process to an MPI collective communication must be “compatible.”

- For example, if one process passes in 0 as the dest_process and another passes in 1, then the outcome of a call to MPI_Reduce is erroneous, and, once again, the program is likely to hang or crash.

Collective vs. Point-to-Point Communications

- The output_data_p argument is only used on dest_process.

- However, all of the processes still need to pass in an actual argument corresponding to output_data_p, even if it’s just NULL.

Collective vs. Point-to-Point Communications

- Point-to-point communications are matched on the basis of tags and communicators.

- Collective communications don’t use tags.
- They’re matched solely on the basis of the communicator and the order in which they’re called.

Example (1)

Time	Process 0	Process 1	Process 2
0	`a = 1; c = 2`	`a = 1; c = 2`	`a = 1; c = 2`
1	`MPI_Reduce(&a, &b, ...)`	`MPI_Reduce(&c, &d, ...)`	`MPI_Reduce(&a, &b, ...)`
2	`MPI_Reduce(&c, &d, ...)`	`MPI_Reduce(&a, &b, ...)`	`MPI_Reduce(&c, &d, ...)`

Multiple calls to MPI_Reduce

Example (2)

- Suppose that each process calls MPI_Reduce with operator MPI_SUM, and destination process 0.

- At first glance, it might seem that after the two calls to MPI_Reduce, the value of b will be 3, and the value of d will be 6.

Example (3)

- However, the names of the memory locations are irrelevant to the matching of the calls to MPI_Reduce.

- The order of the calls will determine the matching so the value stored in b will be 1+2+1 = 4, and the value stored in d will be 2+1+2 = 5.

MPI_Allreduce

- Useful in a situation in which all of the processes need the result of a global sum in order to complete some larger computation.

```
int MPI_Allreduce(
        void*          input_data_p    /* in  */,
        void*          output_data_p   /* out */,
        int            count           /* in  */,
        MPI_Datatype   datatype        /* in  */,
        MPI_Op         operator        /* in  */,
        MPI_Comm       comm            /* in  */);
```

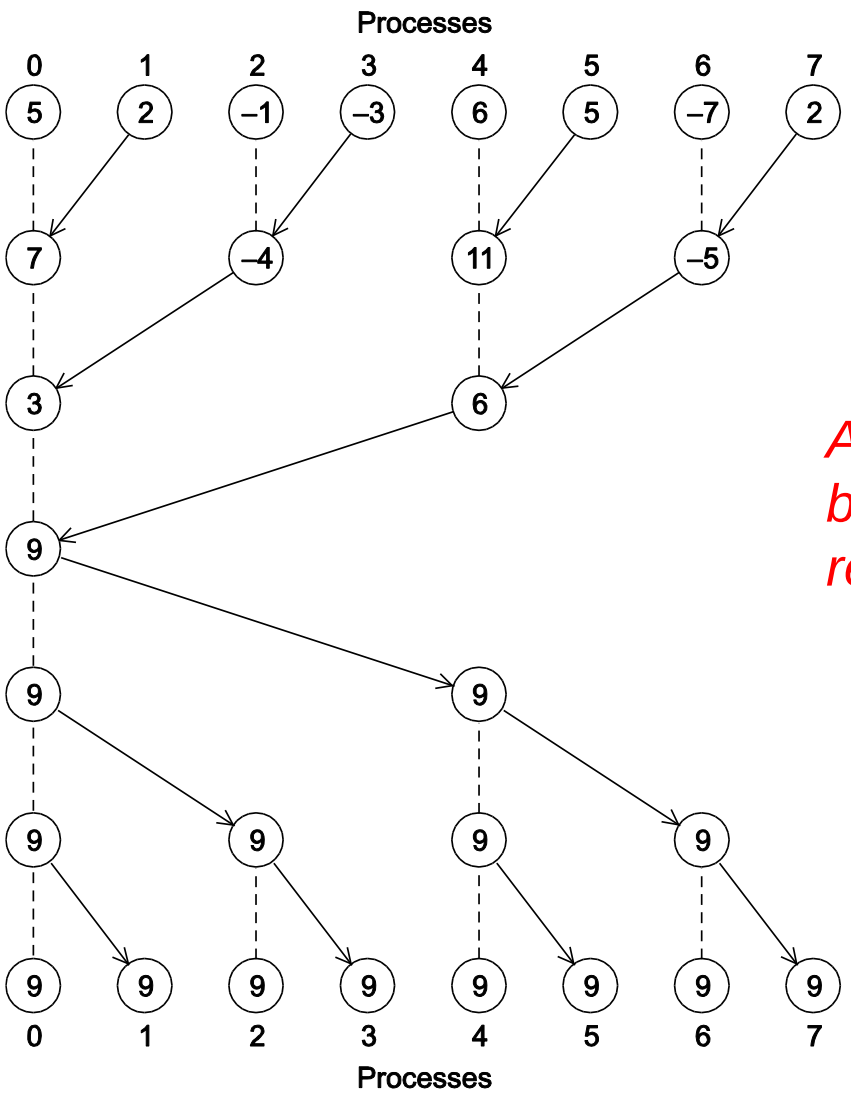

A global sum followed by distribution of the result.

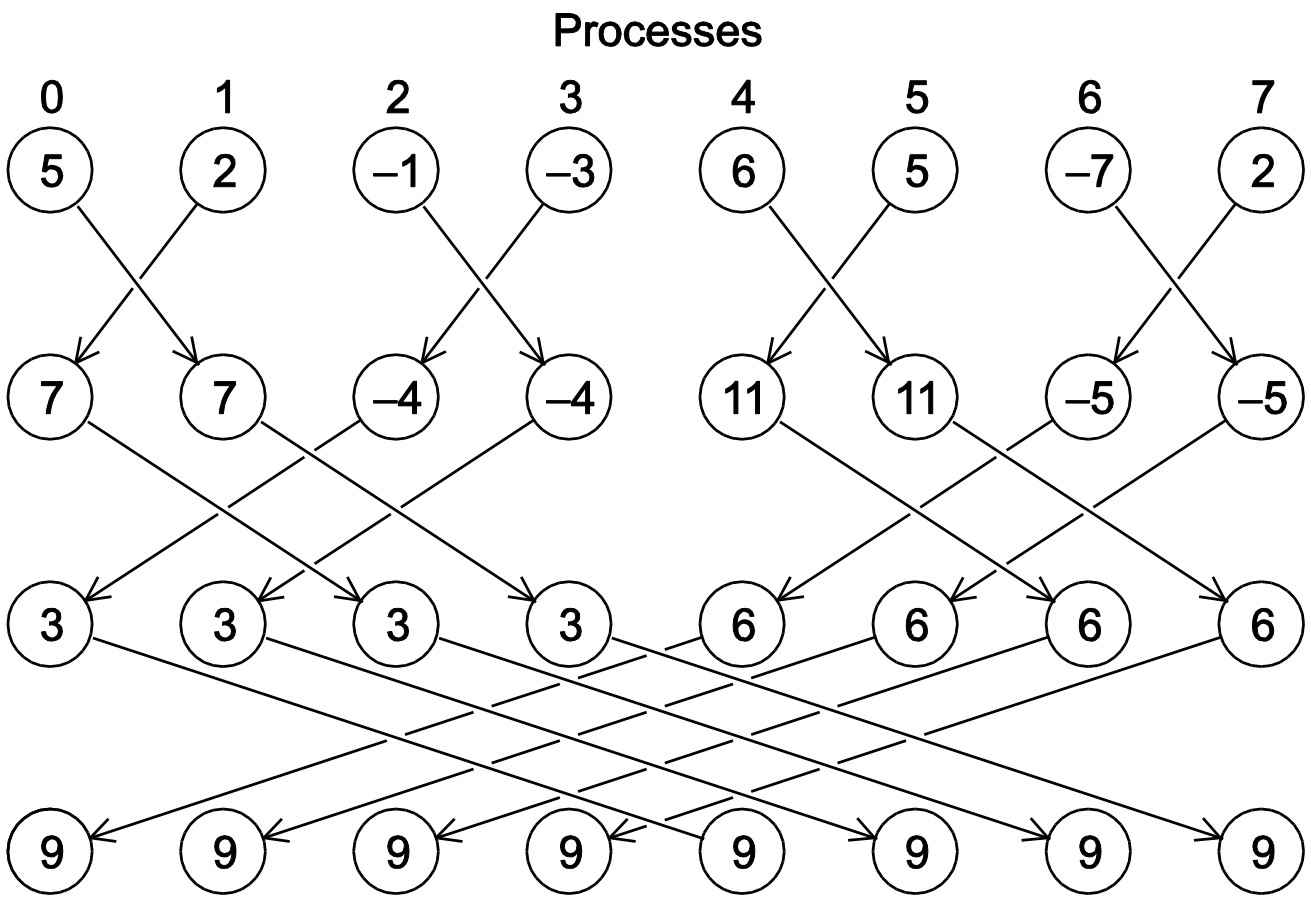

A butterfly-structured global sum.

Broadcast

- Data belonging to a single process is sent to all of the processes in the communicator.

```
int MPI_Bcast(
        void*          data_p        /* in/out */,
        int            count         /* in     */,
        MPI_Datatype   datatype      /* in     */,
        int            source_proc   /* in     */,
        MPI_Comm       comm          /* in     */);
```

A tree-structured broadcast.

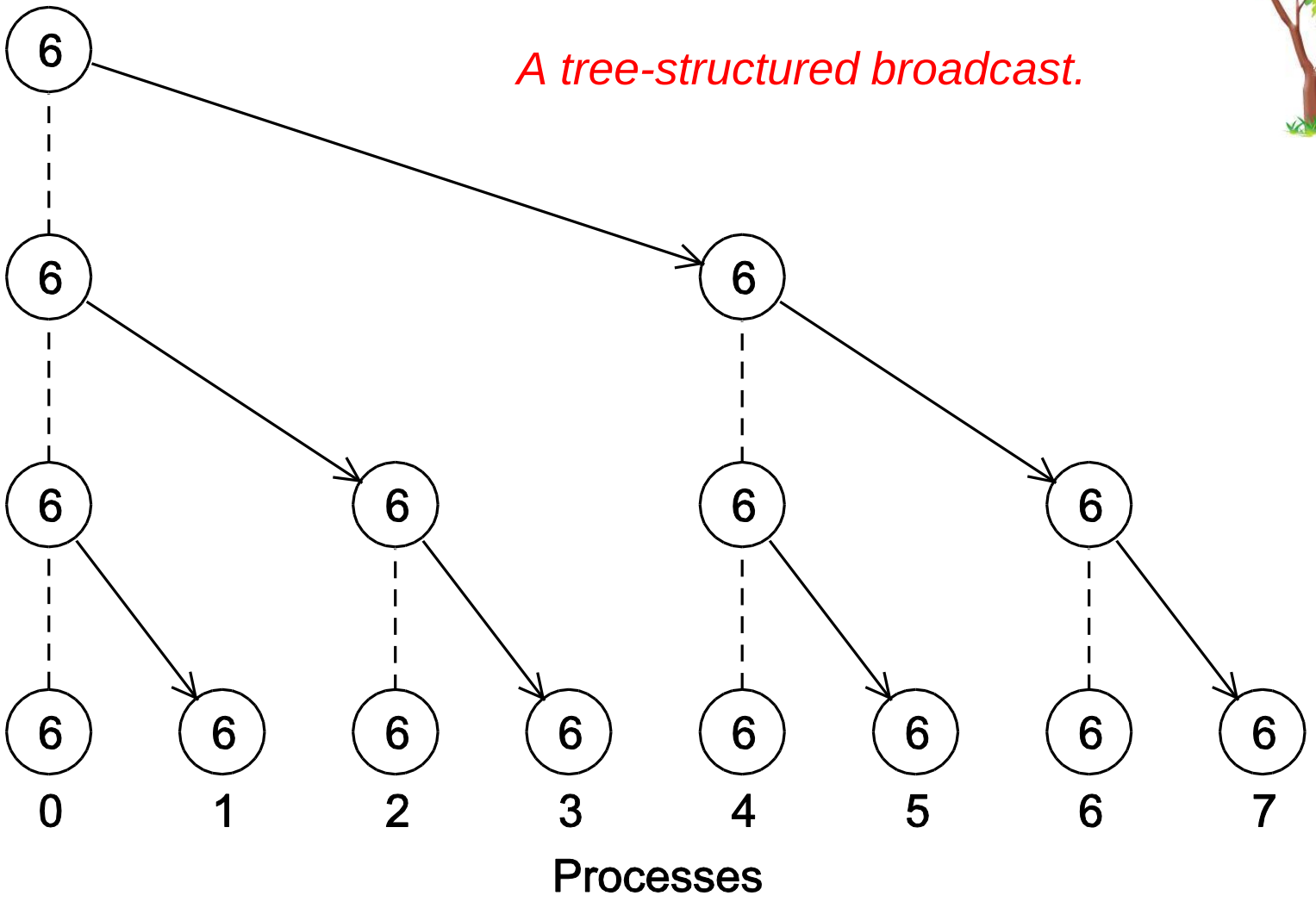

A version of Get_input that uses MPI_Bcast

```
void Get_input(
      int       my_rank  /* in  */,
      int       comm_sz  /* in  */,
      double*   a_p      /* out */,
      double*   b_p      /* out */,
      int*      n_p      /* out */) {

   if (my_rank == 0) {
      printf("Enter a, b, and n\n");
      scanf("%lf %lf %d", a_p, b_p, n_p);
   }
   MPI_Bcast(a_p, 1, MPI_DOUBLE, 0, MPI_COMM_WORLD);
   MPI_Bcast(b_p, 1, MPI_DOUBLE, 0, MPI_COMM_WORLD);
   MPI_Bcast(n_p, 1, MPI_INT, 0, MPI_COMM_WORLD);
}  /* Get_input */
```

Data distributions

$$
\begin{aligned}
\mathbf{x}+\mathbf{y} &= (x_0, x_1, \ldots, x_{n-1}) + (y_0, y_1, \ldots, y_{n-1}) \\
&= (x_0 + y_0, x_1 + y_1, \ldots, x_{n-1} + y_{n-1}) \\
&= (z_0, z_1, \ldots, z_{n-1}) \\
&= \mathbf{z}
\end{aligned}
$$

Compute a vector sum.

Serial implementation of vector addition

```
void Vector_sum(double x[], double y[], double z[], int n) {
   int i;

   for (i = 0; i < n; i++)
      z[i] = x[i] + y[i];
}  /* Vector_sum */
```

Different partitions of a 12-component vector among 3 processes

Process	Components											
	Block				Cyclic				Block-cyclic Blocksize = 2			
0	0	1	2	3	0	3	6	9	0	1	6	7
1	4	5	6	7	1	4	7	10	2	3	8	9
2	8	9	10	11	2	5	8	11	4	5	10	11

Partitioning options

- Block partitioning
  - Assign blocks of consecutive components to each process.
- Cyclic partitioning
  - Assign components in a round robin fashion.
- Block-cyclic partitioning
  - Use a cyclic distribution of blocks of components.

Parallel implementation of vector addition

```
void Parallel_vector_sum(
        double  local_x[]  /* in  */,
        double  local_y[]  /* in  */,
        double  local_z[]  /* out */,
        int     local_n    /* in  */) {
    int local_i;

    for (local_i = 0; local_i < local_n; local_i++)
        local_z[local_i] = local_x[local_i] + local_y[local_i];
}  /* Parallel_vector_sum */
```

Scatter

- MPI_Scatter can be used in a function that reads in an entire vector on process 0 but only sends the needed components to each of the other processes.

```
int MPI_Scatter(
      void*          send_buf_p   /* in  */,
      int            send_count   /* in  */,
      MPI_Datatype   send_type    /* in  */,
      void*          recv_buf_p   /* out */,
      int            recv_count   /* in  */,
      MPI_Datatype   recv_type    /* in  */,
      int            src_proc     /* in  */,
      MPI_Comm       comm         /* in  */);
```

Reading and distributing a vector

```
void Read_vector(
      double    local_a[]   /* out */,
      int       local_n     /* in  */,
      int       n           /* in  */,
      char      vec_name[]  /* in  */,
      int       my_rank     /* in  */,
      MPI_Comm  comm        /* in  */) {

   double* a = NULL;
   int i;

   if (my_rank == 0) {
      a = malloc(n*sizeof(double));
      printf("Enter the vector %s\n", vec_name);
      for (i = 0; i < n; i++)
         scanf("%lf", &a[i]);
      MPI_Scatter(a, local_n, MPI_DOUBLE, local_a, local_n, MPI_DOUBLE,
            0, comm);
      free(a);
   } else {
      MPI_Scatter(a, local_n, MPI_DOUBLE, local_a, local_n, MPI_DOUBLE,
            0, comm);
   }
}  /* Read_vector */
```

Gather

- Collect all of the components of the vector onto process 0, and then process 0 can process all of the components.

```
int MPI_Gather(
        void*          send_buf_p   /* in  */,
        int            send_count   /* in  */,
        MPI_Datatype   send_type    /* in  */,
        void*          recv_buf_p   /* out */,
        int            recv_count   /* in  */,
        MPI_Datatype   recv_type    /* in  */,
        int            dest_proc    /* in  */,
        MPI_Comm       comm         /* in  */);
```

Print a distributed vector (1)

```
void Print_vector(
        double     local_b[]   /* in */,
        int        local_n     /* in */,
        int        n           /* in */,
        char       title[]     /* in */,
        int        my_rank     /* in */,
        MPI_Comm   comm        /* in */) {

    double* b = NULL;
    int i;
```

Print a distributed vector (2)

```
    if (my_rank == 0) {
        b = malloc(n*sizeof(double));
        MPI_Gather(local_b, local_n, MPI_DOUBLE, b, local_n, MPI_DOUBLE,
                0, comm);
        printf("%s\n", title);
        for (i = 0; i < n; i++)
            printf("%f ", b[i]);
        printf("\n");
        free(b);
    } else {
        MPI_Gather(local_b, local_n, MPI_DOUBLE, b, local_n, MPI_DOUBLE,
                0, comm);
    }
}  /* Print_vector */
```

Allgather

- Concatenates the contents of each process' send_buf_p and stores this in each process' recv_buf_p.
- As usual, recv_count is the amount of data being received from each process.

```
int MPI_Allgather(
      void*          send_buf_p   /* in  */,
      int            send_count   /* in  */,
      MPI_Datatype   send_type    /* in  */,
      void*          recv_buf_p   /* out */,
      int            recv_count   /* in  */,
      MPI_Datatype   recv_type    /* in  */,
      MPI_Comm       comm         /* in  */);
```

Matrix-vector multiplication

$A = (a_{ij})$ is an $m \times n$ matrix

$\mathbf{x}$ is a vector with n components

$\mathbf{y} = A\mathbf{x}$ is a vector with m components

$$y_i = a_{i0}x_0 + a_{i1}x_1 + a_{i2}x_2 + \cdots a_{i,n-1}x_{n-1}$$

i-th component of y

Dot product of the ith row of A with x.

Matrix-vector multiplication

$$
\begin{array}{|c|c|c|c|}
\hline
a_{00} & a_{01} & \cdots & a_{0,n-1} \\
\hline
a_{10} & a_{11} & \cdots & a_{1,n-1} \\
\hline
\vdots & \vdots & & \vdots \\
\hline
a_{i0} & a_{i1} & \cdots & a_{i,n-1} \\
\hline
\vdots & \vdots & & \vdots \\
\hline
a_{m-1,0} & a_{m-1,1} & \cdots & a_{m-1,n-1} \\
\hline
\end{array}
\begin{array}{|c|}
\hline
x_0 \\
\hline
x_1 \\
\hline
\vdots \\
\hline
x_{n-1} \\
\hline
\end{array}
=
\begin{array}{|c|}
\hline
y_0 \\
\hline
y_1 \\
\hline
\vdots \\
\hline
y_i = a_{i0}x_0 + a_{i1}x_1 + \cdots a_{i,n-1}x_{n-1} \\
\hline
\vdots \\
\hline
y_{m-1} \\
\hline
\end{array}
$$

Multiply a matrix by a vector

```
/* For each row of A */
for (i = 0; i < m; i++) {
    /* Form dot product of ith row with x */
    y[i] = 0.0;

    for (j = 0; j < n; j++)
        y[i] += A[i][j]*x[j];
}
```

Serial pseudo-code

C style arrays

$$\begin{pmatrix} 0 & 1 & 2 & 3 \\ 4 & 5 & 6 & 7 \\ 8 & 9 & 10 & 11 \end{pmatrix}$$

stored as

$$0\ 1\ 2\ 3\ 4\ 5\ 6\ 7\ 8\ 9\ 10\ 11$$

Serial matrix-vector multiplication

```
void Mat_vect_mult(
        double  A[]  /* in  */,
        double  x[]  /* in  */,
        double  y[]  /* out */,
        int     m    /* in  */,
        int     n    /* in  */) {
    int i, j;

    for (i = 0; i < m; i++) {
        y[i] = 0.0;
        for (j = 0; j < n; j++)
            y[i] += A[i*n+j]*x[j];
    }
}  /* Mat_vect_mult */
```

An MPI matrix-vector multiplication function (1)

```
void Mat_vect_mult(
        double    local_A[]  /* in  */,
        double    local_x[]  /* in  */,
        double    local_y[]  /* out */,
        int       local_m    /* in  */,
        int       n          /* in  */,
        int       local_n    /* in  */,
        MPI_Comm  comm       /* in  */) {
    double* x;
    int local_i, j;
    int local_ok = 1;
```

An MPI matrix-vector multiplication function (2)

```
    x = malloc(n*sizeof(double));
    MPI_Allgather(local_x, local_n, MPI_DOUBLE,
          x, local_n, MPI_DOUBLE, comm);

    for (local_i = 0; local_i < local_m; local_i++) {
       local_y[local_i] = 0.0;
       for (j = 0; j < n; j++)
          local_y[local_i] += local_A[local_i*n+j]*x[j];
    }
    free(x);
}  /* Mat_vect_mult */
```

Mpi derived datatypes

Derived datatypes

- Used to represent any collection of data items in memory by storing both the types of the items and their relative locations in memory.
- The idea is that if a function that sends data knows this information about a collection of data items, it can collect the items from memory before they are sent.
- Similarly, a function that receives data can distribute the items into their correct destinations in memory when they're received.

Derived datatypes

- Formally, consists of a sequence of basic MPI data types together with a displacement for each of the data types.
- Trapezoidal Rule example:

Variable	Address
a	24
b	40
n	48

$$\{(\texttt{MPI\_DOUBLE}, 0), (\texttt{MPI\_DOUBLE}, 16), (\texttt{MPI\_INT}, 24)\}$$

MPI_Type create_struct

- Builds a derived datatype that consists of individual elements that have different basic types.

```
int MPI_Type_create_struct(
      int            count                    /* in   */,
      int            array_of_blocklengths[]  /* in   */,
      MPI_Aint       array_of_displacements[] /* in   */,
      MPI_Datatype   array_of_types[]         /* in   */,
      MPI_Datatype*  new_type_p               /* out  */);
```

MPI_Get_address

- Returns the address of the memory location referenced by location_p.
- The special type MPI_Aint is an integer type that is big enough to store an address on the system.

```
int MPI_Get_address(
      void*        location_p   /* in  */,
      MPI_Aint*    address_p    /* out */);
```

MPI_Type_commit

- Allows the MPI implementation to optimize its internal representation of the datatype for use in communication functions.

```
int MPI_Type_commit(MPI_Datatype*  new_mpi_t_p  /* in/out */);
```

MPI_Type_free

- When we're finished with our new type, this frees any additional storage used.

```
int MPI_Type_free(MPI_Datatype*  old_mpi_t_p  /* in/out */);
```

Get input function with a derived datatype (1)

```
void Build_mpi_type(
      double*        a_p            /* in  */,
      double*        b_p            /* in  */,
      int*           n_p            /* in  */,
      MPI_Datatype*  input_mpi_t_p  /* out */) {

   int array_of_blocklengths[3] = {1, 1, 1};
   MPI_Datatype array_of_types[3] = {MPI_DOUBLE, MPI_DOUBLE, MPI_INT};
   MPI_Aint a_addr, b_addr, n_addr;
   MPI_Aint array_of_displacements[3] = {0};
```

Get input function with a derived datatype (2)

```
    MPI_Get_address(a_p, &a_addr);
    MPI_Get_address(b_p, &b_addr);
    MPI_Get_address(n_p, &n_addr);
    array_of_displacements[1] = b_addr-a_addr;
    array_of_displacements[2] = n_addr-a_addr;
    MPI_Type_create_struct(3, array_of_blocklengths,
          array_of_displacements, array_of_types,
          input_mpi_t_p);
    MPI_Type_commit(input_mpi_t_p);
}  /* Build_mpi_type */
```

Get input function with a derived datatype (3)

```
void Get_input(int my_rank, int comm_sz, double* a_p, double* b_p,
      int* n_p) {
   MPI_Datatype input_mpi_t;

   Build_mpi_type(a_p, b_p, n_p, &input_mpi_t);

   if (my_rank == 0) {
      printf("Enter a, b, and n\n");
      scanf("%lf %lf %d", a_p, b_p, n_p);
   }
   MPI_Bcast(a_p, 1, input_mpi_t, 0, MPI_COMM_WORLD);

   MPI_Type_free(&input_mpi_t);
}  /* Get_input */
```

Performance evaluation

Elapsed parallel time

- Returns the number of seconds that have elapsed since some time in the past.

```
double MPI_Wtime(void);
```

```
double start, finish;
. . .
start = MPI_Wtime();
/* Code to be timed */
. . .
finish = MPI_Wtime();
printf("Proc %d > Elapsed time = %e seconds\n"
      my_rank, finish-start);
```

Elapsed serial time

- In this case, you don’t need to link in the MPI libraries.
- Returns time in microseconds elapsed from some point in the past.

```
#include "timer.h"
. . .
double now;
. . .
GET_TIME(now);
```

Elapsed serial time

```
#include "timer.h"
. . .
double start, finish;
. . .
GET_TIME(start);
/* Code to be timed */
. . .
GET_TIME(finish);
printf("Elapsed time = %e seconds\n", finish-start);
```

MPI_Barrier

- Ensures that no process will return from calling it until every process in the communicator has started calling it.

```
int MPI_Barrier(MPI_Comm    comm    /* in */);
```

MPI_Barrier

```
double local_start, local_finish, local_elapsed, elapsed;
. . .
MPI_Barrier(comm);
local_start = MPI_Wtime();
/* Code to be timed */
. . .
local_finish = MPI_Wtime();
local_elapsed = local_finish − local_start;
MPI_Reduce(&local_elapsed, &elapsed, 1, MPI_DOUBLE,
   MPI_MAX, 0, comm);

if (my_rank == 0)
   printf("Elapsed time = %e seconds\n", elapsed);
```

Run-times of serial and parallel matrix-vector multiplication

comm_sz	Order of Matrix				
	1024	2048	4096	8192	16,384
1	4.1	16.0	64.0	270	1100
2	2.3	8.5	33.0	140	560
4	2.0	5.1	18.0	70	280
8	1.7	3.3	9.8	36	140
16	1.7	2.6	5.9	19	71

(Seconds)

Speedup

$$S(n,p) = \frac{T_{\text{serial}}(n)}{T_{\text{parallel}}(n,p)}$$

Efficiency

$$E(n,p) = \frac{S(n,p)}{p} = \frac{T_{\text{serial}}(n)}{p \times T_{\text{parallel}}(n,p)}$$

Speedups of Parallel Matrix-Vector Multiplication

comm_sz	Order of Matrix				
	1024	2048	4096	8192	16,384
1	1.0	1.0	1.0	1.0	1.0
2	1.8	1.9	1.9	1.9	2.0
4	2.1	3.1	3.6	3.9	3.9
8	2.4	4.8	6.5	7.5	7.9
16	2.4	6.2	10.8	14.2	15.5

Efficiencies of Parallel Matrix-Vector Multiplication

comm_sz	Order of Matrix				
	1024	2048	4096	8192	16,384
1	1.00	1.00	1.00	1.00	1.00
2	0.89	0.94	0.97	0.96	0.98
4	0.51	0.78	0.89	0.96	0.98
8	0.30	0.61	0.82	0.94	0.98
16	0.15	0.39	0.68	0.89	0.97

Scalability

- A program is scalable if the problem size can be increased at a rate so that the efficiency doesn't decrease as the number of processes increase.

Scalability

- Programs that can maintain a constant efficiency without increasing the problem size are sometimes said to be strongly scalable.

- Programs that can maintain a constant efficiency if the problem size increases at the same rate as the number of processes are sometimes said to be weakly scalable.

A parallel sorting algorithm

Sorting

- n keys and p = comm sz processes.
- n/p keys assigned to each process.
- No restrictions on which keys are assigned to which processes.
- When the algorithm terminates:
  - The keys assigned to each process should be sorted in (say) increasing order.
  - If $0 \leq q < r < p$, then each key assigned to process q should be less than or equal to every key assigned to process r.

Serial bubble sort

```
void Bubble_sort(
        int  a[]  /* in/out */,
        int  n    /* in     */) {
    int list_length, i, temp;

    for (list_length = n; list_length >= 2; list_length--)
        for (i = 0; i < list_length-1; i++)
            if (a[i] > a[i+1]) {
                temp = a[i];
                a[i] = a[i+1];
                a[i+1] = temp;
            }

}  /* Bubble_sort */
```

Odd-even transposition sort

- A sequence of phases.
- Even phases, compare swaps:

$$(a[0], a[1]), (a[2], a[3]), (a[4], a[5]), \ldots$$

- Odd phases, compare swaps:

$$(a[1], a[2]), (a[3], a[4]), (a[5], a[6]), \ldots.$$

Example

Start: 5, 9, 4, 3

Even phase: compare-swap (5,9) and (4,3)
getting the list 5, 9, 3, 4

Odd phase: compare-swap (9,3)
getting the list 5, 3, 9, 4

Even phase: compare-swap (5,3) and (9,4)
getting the list 3, 5, 4, 9

Odd phase: compare-swap (5,4)
getting the list 3, 4, 5, 9

Serial odd-even transposition sort

```
void Odd_even_sort(
        int  a[]  /* in/out */,
        int  n    /* in     */) {
    int phase, i, temp;

    for (phase = 0; phase < n; phase++)
        if (phase % 2 == 0) { /* Even phase */
            for (i = 1; i < n; i += 2)
                if (a[i-1] > a[i]) {
                    temp = a[i];
                    a[i] = a[i-1];
                    a[i-1] = temp;
                }
        } else { /* Odd phase */
            for (i = 1; i < n-1; i += 2)
                if (a[i] > a[i+1]) {
                    temp = a[i];
                    a[i] = a[i+1];
                    a[i+1] = temp;
                }
        }
}  /* Odd_even_sort */
```

Communications among tasks in odd-even sort

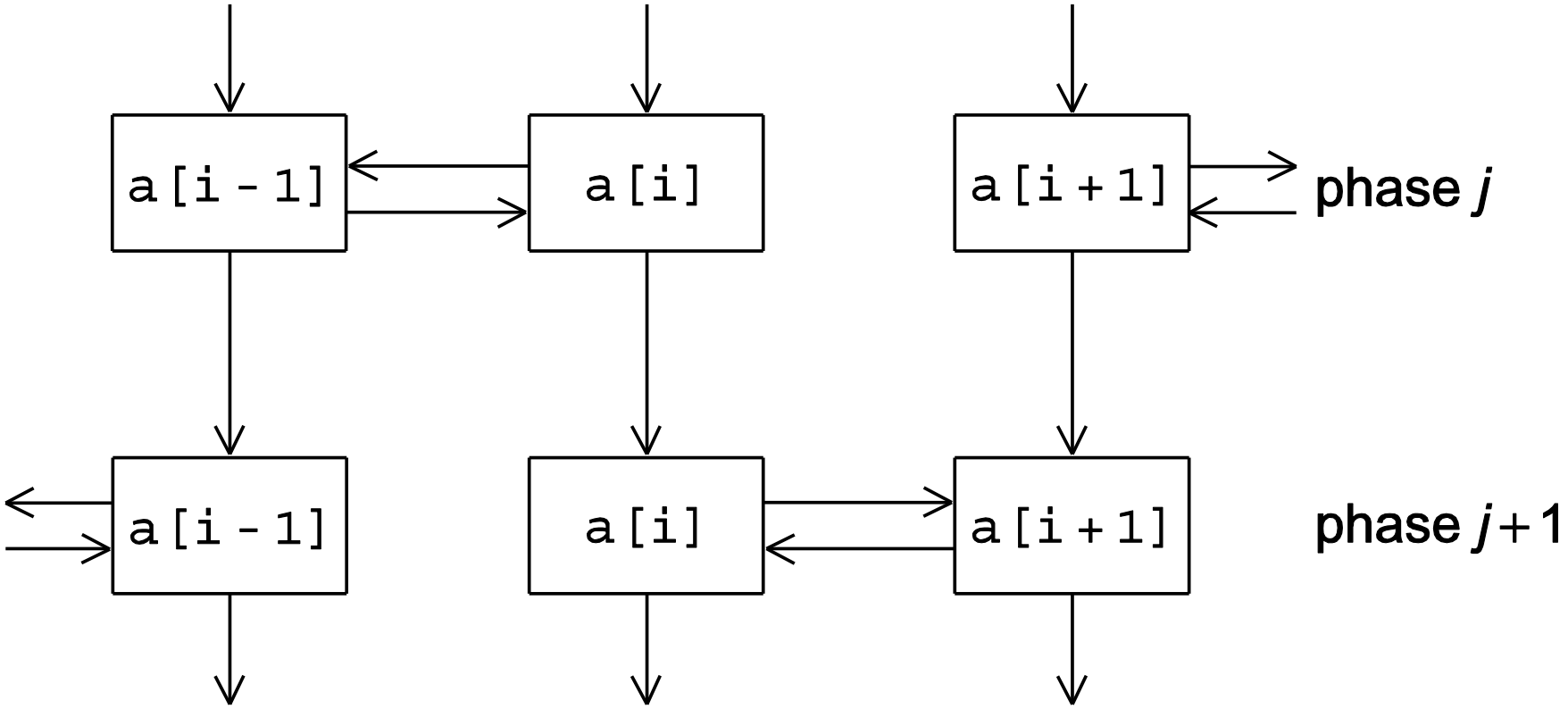

Tasks determining a[i] are labeled with a[i].

Parallel odd-even transposition sort

Time	Process			
	0	1	2	3
Start	15, 11, 9, 16	3, 14, 8, 7	4, 6, 12, 10	5, 2, 13, 1
After Local Sort	9, 11, 15, 16	3, 7, 8, 14	4, 6, 10, 12	1, 2, 5, 13
After Phase 0	3, 7, 8, 9	11, 14, 15, 16	1, 2, 4, 5	6, 10, 12, 13
After Phase 1	3, 7, 8, 9	1, 2, 4, 5	11, 14, 15, 16	6, 10, 12, 13
After Phase 2	1, 2, 3, 4	5, 7, 8, 9	6, 10, 11, 12	13, 14, 15, 16
After Phase 3	1, 2, 3, 4	5, 6, 7, 8	9, 10, 11, 12	13, 14, 15, 16

Pseudo-code

```
Sort local keys;
for (phase = 0; phase < comm_sz; phase++) {
   partner = Compute_partner(phase, my_rank);
   if (I'm not idle) {
      Send my keys to partner;
      Receive keys from partner;
      if (my_rank < partner)
         Keep smaller keys;
      else
         Keep larger keys;
   }
}
```

Compute_partner

```
if (phase % 2 == 0)          /* Even phase */
   if (my_rank % 2 != 0)       /* Odd rank */
      partner = my_rank - 1;
   else                        /* Even rank */
      partner = my_rank + 1;
else                        /* Odd phase */
   if (my_rank % 2 != 0)       /* Odd rank */
      partner = my_rank + 1;
   else                        /* Even rank */
      partner = my_rank - 1;
if (partner == -1 || partner == comm_sz)
   partner = MPI_PROC_NULL;
```

Safety in MPI programs

- The MPI standard allows MPI_Send to behave in two different ways:
  - it can simply copy the message into an MPI managed buffer and return,
  - or it can block until the matching call to MPI_Recv starts.

Safety in MPI programs

- Many implementations of MPI set a threshold at which the system switches from buffering to blocking.
- Relatively small messages will be buffered by MPI_Send.
- Larger messages, will cause it to block.

Safety in MPI programs

- If the MPI_Send executed by each process blocks, no process will be able to start executing a call to MPI_Recv, and the program will hang or deadlock.

- Each process is blocked waiting for an event that will never happen.

(see pseudo-code)

Safety in MPI programs

- A program that relies on MPI provided buffering is said to be unsafe.

- Such a program may run without problems for various sets of input, but it may hang or crash with other sets.

MPI_Ssend

- An alternative to MPI_Send defined by the MPI standard.
- The extra “s” stands for synchronous and MPI_Ssend is guaranteed to block until the matching receive starts.

```
int MPI_Ssend(
      void*          msg_buf_p      /* in */,
      int            msg_size       /* in */,
      MPI_Datatype   msg_type       /* in */,
      int            dest           /* in */,
      int            tag            /* in */,
      MPI_Comm       communicator   /* in */);
```

Restructuring communication

```
MPI_Send(msg, size, MPI_INT, (my_rank+1) % comm_sz, 0, comm);
MPI_Recv(new_msg, size, MPI_INT, (my_rank+comm_sz−1) % comm_sz,
      0, comm, MPI_STATUS_IGNORE.
```

≡

```
if (my_rank % 2 == 0) {
   MPI_Send(msg, size, MPI_INT, (my_rank+1) % comm_sz, 0, comm);
   MPI_Recv(new_msg, size, MPI_INT, (my_rank+comm_sz−1) % comm_sz,
         0, comm, MPI_STATUS_IGNORE.
} else {
   MPI_Recv(new_msg, size, MPI_INT, (my_rank+comm_sz−1) % comm_sz,
         0, comm, MPI_STATUS_IGNORE.
   MPI_Send(msg, size, MPI_INT, (my_rank+1) % comm_sz, 0, comm);
}
```

MPI_Sendrecv

- An alternative to scheduling the communications ourselves.
- Carries out a blocking send and a receive in a single call.
- The dest and the source can be the same or different.
- Especially useful because MPI schedules the communications so that the program won’t hang or crash.

MPI_Sendrecv

```
int MPI_Sendrecv(
        void*          send_buf_p      /* in  */,
        int            send_buf_size   /* in  */,
        MPI_Datatype   send_buf_type   /* in  */,
        int            dest            /* in  */,
        int            send_tag        /* in  */,
        void*          recv_buf_p      /* out */,
        int            recv_buf_size   /* in  */,
        MPI_Datatype   recv_buf_type   /* in  */,
        int            source          /* in  */,
        int            recv_tag        /* in  */,
        MPI_Comm       communicator    /* in  */,
        MPI_Status*    status_p        /* in  */);
```

Safe communication with five processes

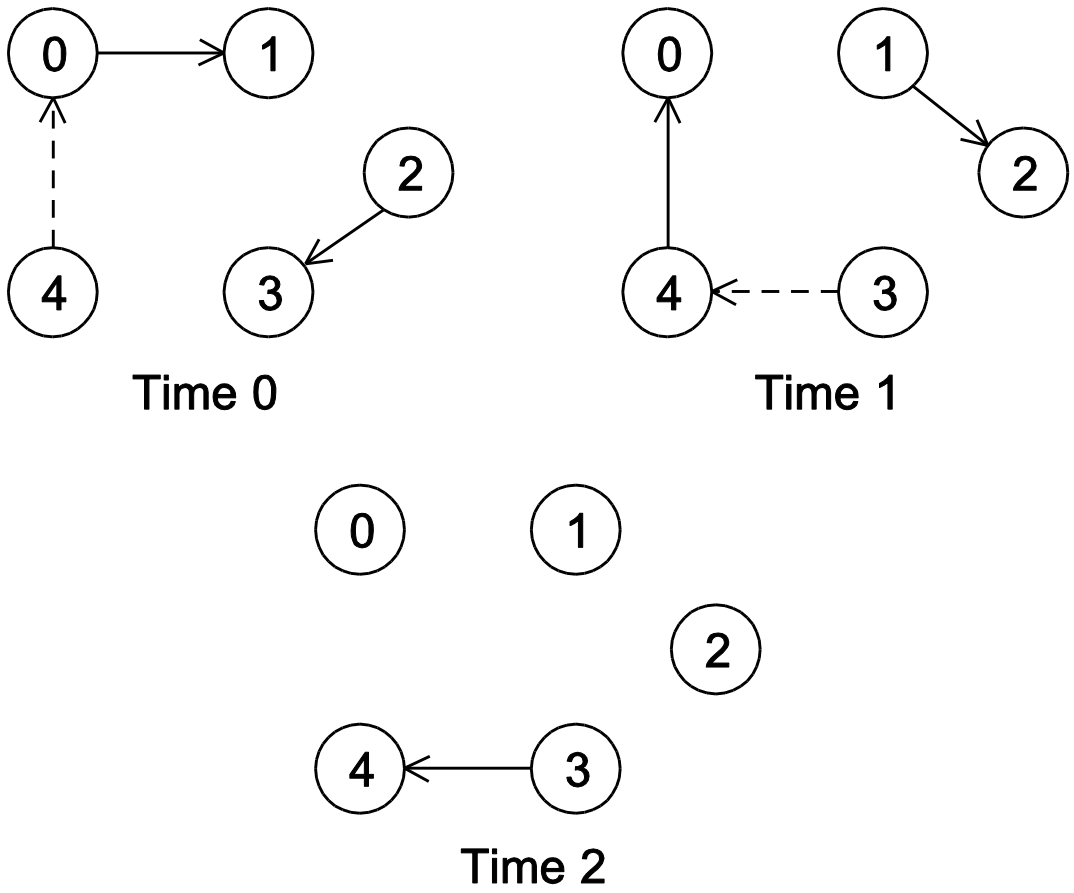

Parallel odd-even transposition sort

```
void Merge_low(
      int  my_keys[],      /* in/out    */
      int  recv_keys[],    /* in        */
      int  temp_keys[],    /* scratch   */
      int  local_n         /* = n/p, in */) {
   int m_i, r_i, t_i;

   m_i = r_i = t_i = 0;
   while (t_i < local_n) {
      if (my_keys[m_i] <= recv_keys[r_i]) {
         temp_keys[t_i] = my_keys[m_i];
         t_i++; m_i++;
      } else {
         temp_keys[t_i] = recv_keys[r_i];
         t_i++; r_i++;
      }
   }

   for (m_i = 0; m_i < local_n; m_i++)
      my_keys[m_i] = temp_keys[m_i];
}  /* Merge_low */
```

Run-times of parallel odd-even sort

Processes	Number of Keys (in thousands)				
	200	400	800	1600	3200
1	88	190	390	830	1800
2	43	91	190	410	860
4	22	46	96	200	430
8	12	24	51	110	220
16	7.5	14	29	60	130

(times are in milliseconds)

Concluding Remarks (1)

- MPI or the Message-Passing Interface is a library of functions that can be called from C, C++, or Fortran programs.
- A communicator is a collection of processes that can send messages to each other.
- Many parallel programs use the single-program multiple data or SPMD approach.

Concluding Remarks (2)

- Most serial programs are deterministic: if we run the same program with the same input we'll get the same output.
- Parallel programs often don't possess this property.
- Collective communications involve all the processes in a communicator.

Concluding Remarks (3)

- When we time parallel programs, we're usually interested in elapsed time or "wall clock time".
- Speedup is the ratio of the serial run-time to the parallel run-time.
- Efficiency is the speedup divided by the number of parallel processes.

Concluding Remarks (4)

- If it’s possible to increase the problem size (n) so that the efficiency doesn’t decrease as p is increased, a parallel program is said to be scalable.
- An MPI program is unsafe if its correct behavior depends on the fact that MPI_Send is buffering its input.